3510
Nasa
SP-8025

NASA
SPACE VEHICLE
DESIGN CRITERIA
(CHEMICAL PROPULSION)

NASA SP-8025

SOLID ROCKET MOTOR METAL CASES

PROPERTY OF
MSFC LIBRARY

April 1970

NATIONAL AERONAUTICS AND SPACE ADMINISTRATION

FOREWORD

NASA experience has indicated a need for uniform criteria for the design of space vehicles. Accordingly, criteria are being developed in the following areas of technology:

Environment
Structures
Guidance and Control
Chemical Propulsion

Individual components of this work will be issued as separate monographs as soon as they are completed. This document, part of the series on Chemical Propulsion, is one such monograph. A list of all monographs issued prior to this one can be found on the last page of this document.

These monographs are to be regarded as guides to design and not as NASA requirements, except as may be specified in formal project specifications. It is expected, however, that these documents, revised as experience may indicate to be desirable, eventually will provide uniform practices for NASA space vehicles.

This monograph, "Solid Rocket Motor Metal Cases," was prepared under the direction of Howard W. Douglass, Chief, Design Criteria Office, Lewis Research Center; project management was by John H. Collins, Jr. The monograph was written by Harold K. Whitfield of the Aerojet-General Corp., and was edited by Russell B. Keller, Jr., of Lewis. To assure technical accuracy of this document, scientists and engineers throughout the technical community participated in interviews, consultations, and critical review of the text. In particular, Dr. B. R. Felix of United Technology Center, Ralph Davis, Jr., of Thiokol Chemical Corp., and Thomas Vose of Hercules, Inc., reviewed the monograph in detail.

Comments concerning the technical content of these monographs will be welcomed by the National Aeronautics and Space Administration, Office of Advanced Research and Technology (Code RVA), Washington, D.C. 20546.

April 1970

GUIDE TO THE USE OF THIS MONOGRAPH

The purpose of this monograph is to organize and present, for effective use in design, the significant experience and knowledge accumulated in development and operational programs to date. It reviews and assesses current design practices, and from them establishes firm guidance for achieving greater consistency in design, increased reliability in the end product, and greater efficiency in the design effort. The monograph is organized into two major sections that are preceded by a brief introduction and complemented by a set of references.

The State of the Art, section 2, reviews and discusses the total design problem, and identifies which design elements are involved in successful design. It describes succinctly the current technology pertaining to these elements. When detailed information is required, the best available references are cited. This section serves as a survey of the subject that provides background material and prepares a proper technological base for the *Design Criteria* and Recommended Practices.

The *Design Criteria*, shown in italic in section 3, state clearly and briefly what rule, guide, limitation, or standard must be imposed on each essential design element to assure successful design. The *Design Criteria* can serve effectively as a checklist of rules for the project manager to use in guiding a design or in assessing its adequacy.

The Recommended Practices, also in section 3, state how to satisfy each of the criteria. Whenever possible, the best procedure is described; when this cannot be done concisely, appropriate references are provided. The Recommended Practices, in conjunction with the *Design Criteria* provide positive guidance to the practicing designer on how to achieve successful design.

Both sections have been organized into decimally numbered subsections so that the subjects within similarly numbered subsections correspond from section to section. The format for the Contents displays this continuity of subject in such a way that a particular aspect of design can be followed through both sections as a discrete subject.

The design criteria monograph is not intended to be a design handbook, a set of specifications, or a design manual. It is a summary and a systematic ordering of the large and loosely organized body of existing successful design techniques and practices. Its value and its merit should be judged on how effectively it makes that material available to and useful to the designer.

CONTENTS

	Page
1. INTRODUCTION	1
2. STATE OF THE ART	2
3. DESIGN CRITERIA AND RECOMMENDED PRACTICES	43
REFERENCES	85
NASA Space Vehicle Design Criteria Documents Issued to Date	95

SUBJECT	STATE OF THE ART	DESIGN CRITERIA AND RECOMMENDED PRACTICES
CASE CONFIGURATION	3	43
Design Optimization	3	43
External Envelope	5	45
Envelope Volume	–	45
Size and Complexity Constraints	–	45
End Closure	–	46
Length-to-Diameter Ratio	–	46
Propellant Mass Fraction	6	46
MATERIAL SELECTION	8	47
Case Loading	8	47
Critical-Temperature Loading	–	47
Weight Limit	–	48
Mode of Failure	8	48
Brittle Failure	8	48
Ductile Failure	9	50
Failure Histories	9	–

SUBJECT	STATE OF THE ART	DESIGN CRITERIA AND RECOMMENDED PRACTICES
Fatigue	11	51
Fabrication Considerations	11	51
Case-Configuration Considerations	12	52
Heat-Treatment Requirements	–	52
Material Sizes and Properties	–	52
Environmental Considerations	13	53
Thermal Environment	13	53
Corrosive Environments	14	54
Space Environment	15	56
Sterilization for Planetary Exploration	17	58
Material Properties	17	–
Steel	17	–
Titanium	19	–
Aluminum	20	–
CASE DESIGN	20	59
General Case Design	20	59
Design Definitions	21	–
Design Safety Factor	23	60
Case End-Closure Configuration	24	61
Case Attachment Fittings	24	61
Motor Case Loads	26	62
Attachment Loads	27	62
Internal Loads	29	66
External Loads	29	69
Structural Analysis	29	70
Thin-Shell Structure	29	70
Local Attachments and Openings	31	71
Local Weld Discontinuities	35	72
Buckling of Thin-Wall Shells	37	73
Structural Dynamics	37	74

SUBJECT	STATE OF THE ART	DESIGN CRITERIA AND RECOMMENDED PRACTICES
Bending Frequency	37	75
External Dynamic Environment	38	75
Internal Dynamic Environment	38	77
CASE FABRICATION	39	78
Fabrication Cost and Reliability	–	78
Fabrication Effects	–	80
TESTING AND INSPECTION	39	80
Destructive testing	39	80
Nondestructive Testing	40	81
Inspection Plan	40	81
Inspection Processes	41	82
Hydrostatic Proof Test	42	82

LIST OF FIGURES

Figure	Title	Page
1	Typical solid rocket motor	2
2	Typical solid rocket motor case	3
3	Typical study of first-stage motor costs	4
4	Inert weight tradeoffs	7
5	Typical case attachments	25
6	Motor case cylinder-closure transition	30
7	Effect of longitudinal load on deflection	31
8	Attachment fitting fabricated as integral part of motor	32
9	Simulated hook stiffness	33
10	Attachment fitting ring stress plots	34
11	Model for attachment and ring section analysis	35
12	Fully circumferential attachment	36
13	Y-ring skirt attachment	65
14	Thrust load on a rocket motor	68

LIST OF TABLES

Table	Title	Page
I	Uniaxial and plate room-temperature properties of common aerospace alloys	18
II	Motor case static loads	27
III	Comparison of case fabrication methods	79

Solid Rocket Motor Metal Cases

1. INTRODUCTION

The design objective is to produce a motor case that will fulfill mission requirements at minimum cost. A motor case design that is less than this optimum may result from failure to coordinate design requirements with constraints or from failure to select the best design approach. Therefore, specific guidelines and practices are required to assure that the motor case is of an optimum design for the mission objectives. This monograph has been prepared to establish these guidelines and practices for use either in initial case design or design improvement. It provides direction for the application of various case design technologies that have been successful. Also, the tradeoffs, risks, or consequences are discussed in those areas where more than one acceptable approach is available to satisfy the design requirements.

Generally, the case design technology has progressed to the point where efficient and reliable motor cases can be produced with consistency for any required use. However, improper use of existing technology sometimes results in cracking or complete rupture of the case in service, or causes unnecessary weight penalties or high costs. Typically, case failures have resulted from improper design and analysis, underestimation of service conditions, failure to use nondestructive tests at critical phases of fabrication, and improper material and process control, including weld qualification. Furthermore, the case is usually designed to satisfy performance requirements, while an independent, parallel effort is made to assess cost effectiveness and reliability for the specific design. Therefore, emphasis is placed on those areas where specific technical approaches, cost-effectiveness and reliability trade studies, or material and process evaluations and controls should be coordinated to achieve design objectives.

The material is organized around the major tasks in case design: (1) case configuration (case characteristics as related to the motor and vehicle requirements); (2) material selection (case loading, mode of failure, fatigue, fabrication, configuration, environmental effects); (3) case design (safety factor, end closure, case attachments, case loads, structural analysis, structural dynamics); (4) case fabrication; and (5) inspection and testing (inspection plan, destructive and nondestructive testing, and hydrostatic test).

These tasks are considered in the order and manner in which the designer must handle them. Within these task areas, the critical aspects of the structural, performance, and physical boundary requirements that the case design must satisfy are presented.

2. STATE OF THE ART

The objectives of the motor case design are to establish the case configuration, select the structural material, and establish a case structure that results in either optimum performance or optimum cost effectiveness, depending on the specific program objectives and design requirements. Generally, the optimum case design is the least expensive one that satisfies all the mission objectives while not violating any imposed constraints (i.e., the most cost effective).

Typical solid rocket motor and case with descriptive terms used throughout this monograph are shown in figures 1 and 2.

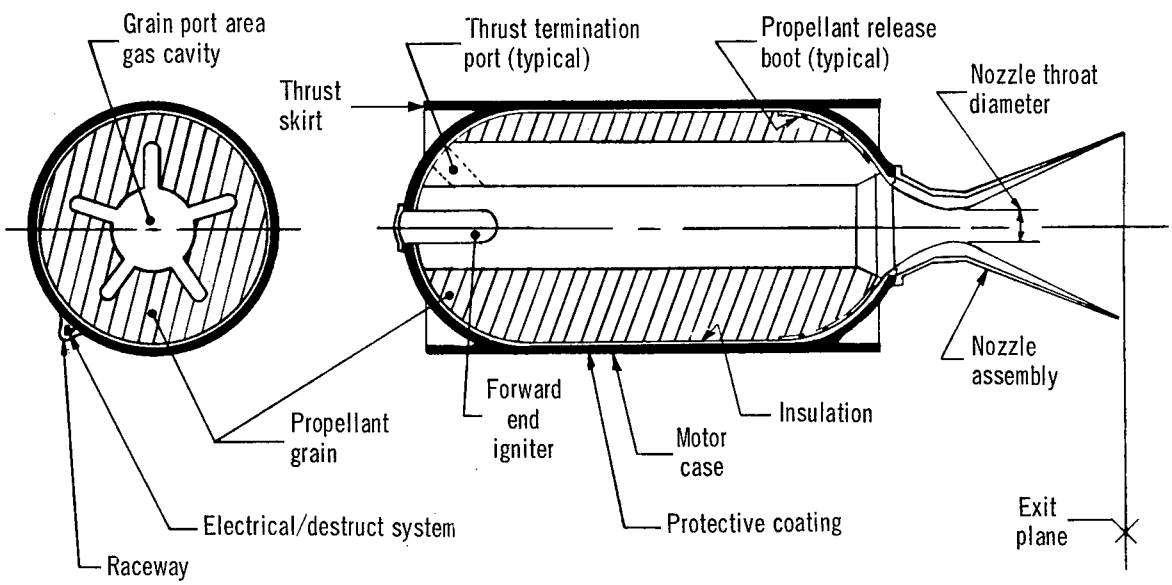

Figure 1.–Typical solid rocket motor.

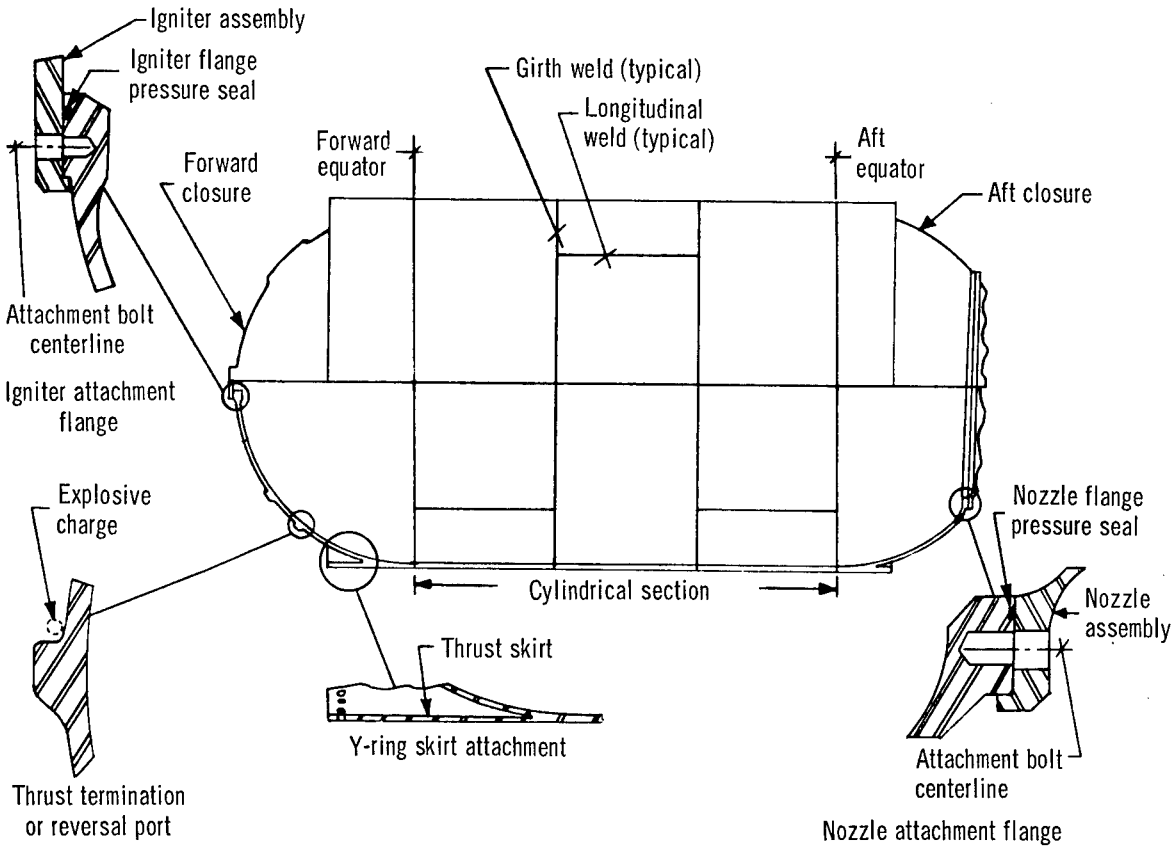

Figure 2.—Typical solid rocket motor case.

2.1 Case Configuration

2.1.1 Design Optimization

Motor case design is governed by the motor and vehicle requirements, such as performance characteristics (including motor propellant grain design), envelope constraints, mission profile, and other components within the individual stage and the vehicle. These factors are interdependent in their influence on the case design. In some programs, the basic case design parameters, including length-to-diameter ratio, external constraints, internal pressure, motor case flight loads, and propellant mass fraction, are specified. In other programs, these design requirements must be determined in studies to define the optimum tradeoff relationship between the case design parameters and the motor and vehicle design parameters.

Case cost optimization is usually considered independently of performance optimization. One approach used in parametric cost analysis, especially relative to the pressure vessel, is to consider cost alternatives involving individual motor components. For multistage vehicles, single stages normally are evaluated individually; trajectory performance is maintained constant, and design and cost alternatives are investigated. For example, the influence of chamber pressure and chamber thickness on cost may be investigated in this manner (ref. 1). This procedure can also be extended to the selection of alternative structural materials for the pressure vessel and to the consideration of various motor thrust levels (refs. 2 to 5).

Results of a study of cost tradeoff between case materials of various strengths are shown in figure 3 for a specific motor application. Lower material strengths (lower ksi) usually are associated with lower material costs. The data of figure 3, however, indicate that use of the lowest cost (lowest strength) structural material for the motor case does not result in the lowest overall motor cost (ref. 4). Although motor cost and case material strength usually are directly related, any unique characteristics of high raw-material cost or high fabrication and inspection costs with a particular material can significantly influence the trend.

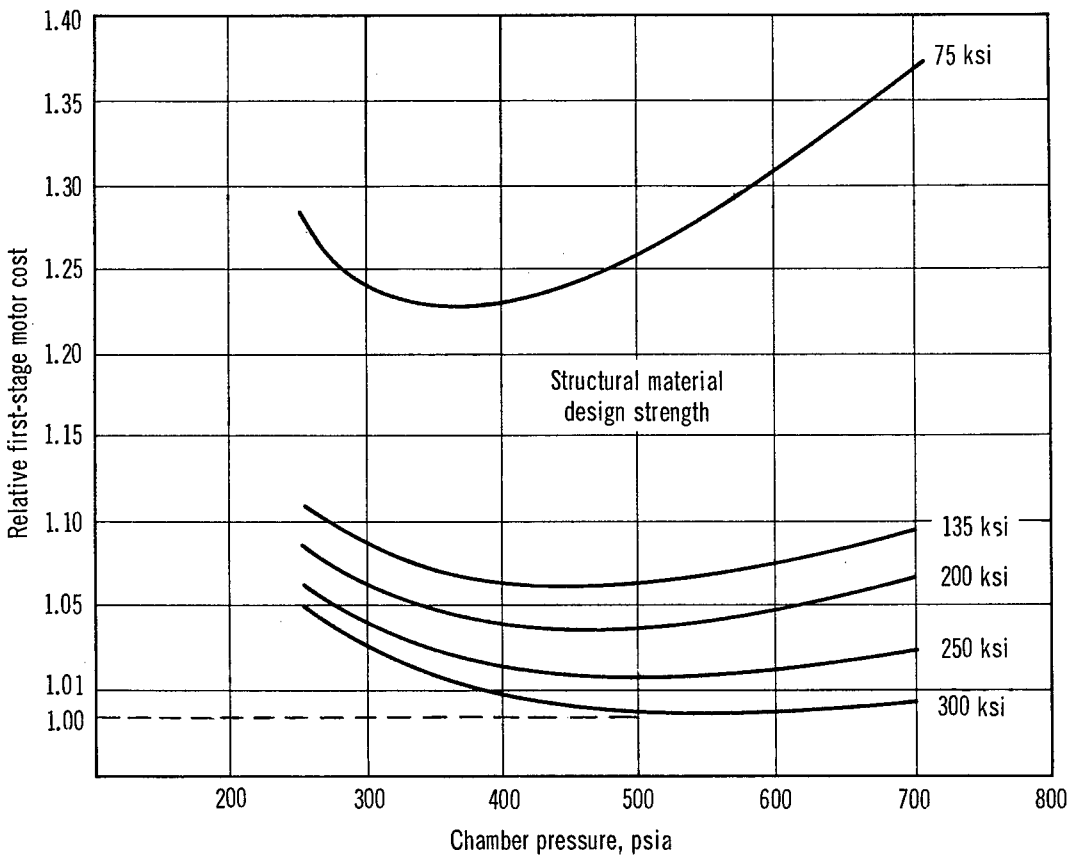

Figure 3.–Typical study of first-stage motor costs (constant performance).

The cost-control problem associated with the motor case is of such magnitude that a direct solution for the optimum configuration is not available. The approach generally used is to establish a baseline configuration and then to continue to improve on it, with cost effectiveness as the criterion.

Computer programs used within the aerospace industry for multistage vehicle analyses and design selections are discussed in references 6 through 19. These programs are continually being modified, improved in depth, and updated. A survey of these programs (ref. 20) indicates that the major differences among them are the individual emphasis on certain analyses and the applied constraints.

Because weight is a very important consideration in the case design selection, parametric weight-scaling programs (refs. 7, 10, 13, 21, and 22) have been developed that provide sufficient accuracy for preliminary design studies, but do not require large amounts of computer or hand calculation time.

When the interdependent case and motor parameters are not specified, the precision of the final case design selection is dependent on the extent to which the parameters most influential in case design are included in the optimization program. The following design considerations have a significant influence on case design and normally are evaluated when optimization analyses are required. These considerations are in addition to the important requirements imposed on the case design by motor internal pressure, motor thrust loads, and loads resulting from the particular motor or vehicle configuration (sec. 2.3.5).

2.1.2 External Envelope

The case external envelope is usually selected as the optimum envelope that maximizes performance or minimizes cost when all independent vehicle and case design variables are evaluated in the optimization program. However, the allowable case envelope is sometimes established by such items as payload or stage interface; available tooling, transportation limits, handling equipment, and launch facilities; and the use of specified grain design and auxiliary equipment. For small motors performing specialized functions on large vehicles, the envelope constraints are usually defined by the vehicle system, and imposed directly on the small motor configuration. Commonly used configurations range from oblate spheroids to cylinders with elliptical or hemispherical heads. This latter shape results in some degree of design flexibility, in that both diameter and length may be used as variables when satisfying a particular volume requirement. A spherical or elliptical chamber has a unique diameter for a given volume requirement, and consequently allows the designer little flexibility.

With the use of the cylindrical shape for the motor case, the length-to-diameter ratio influences the magnitude of the axial compressive drag load and atmospheric lift and flight-control loads acting on the motor case. Also, the case length-to-diameter ratio influences the capability of the case to react these loads.

Case cylindrical length-to-diameter ratios between 2 and 5 usually result in the best ratio of propellant mass to total mass for homogeneous chambers (for fixed propellant weight) when considering all motor weight items such as pressure vessel, insulation, and interstage structure. High values of cylindrical length-to-diameter ratio tend to produce a very long vehicle that might violate length constraints and could result in severe case buckling and bending problems.

2.1.3 Propellant Mass Fraction

Propellant mass fraction is a measure of motor design loading efficiency. It is usually defined as the ratio of the mass of initial propellant to the mass of the total motor, where the total motor consists of the initial propellant plus motor inert components (components that do not produce pressure and thrust). Solid-propellant motor mass fractions vary from about 0.3 to 0.96. The lower values generally apply to auxiliary motors, such as separation motors; to gas generators; and to very small motors. The high mass fractions generally are associated with simple motors and particularly with upper stage motors, where added inert mass (usually referred to as inert weight) causes excessive velocity losses.

In most motor applications, inert weight is all motor weight except for motor propellant weight. The sensitivity of vehicle performance to inert-weight changes is shown in figure 4. Inert-weight/payload tradeoffs are plotted as a function of ideal velocity for each stage of three- or four-stage vehicles. Ideal velocity is defined as the value that the vehicle could attain for drag- and gravity-free evaluations. The vehicles were assumed to have a 0.90 propellant mass fraction in each stage, an average specific-impulse value of 260 lbf-sec/lbm in the first stages, and a specific-impulse value of 280 lbf-sec/lbm in all upper stages. It is assumed that each stage has the same mass ratio (launch-to-burnout weight) and that the individual stage velocity gain for each vehicle in figure 4 is, therefore, proportional to the stage specific-impulse values. As shown by the figure, the tradeoff for 1 lb of final-stage inerts is equivalent to 1 lb of payload. It is also shown that 1 lb of final-stage inert weight is equivalent to more than 1000 lb of first-stage inerts.

This figure displays the significant advantages in overall increased vehicle performance that can be obtained in most vehicles by carefully optimizing the inert weight of each stage of the vehicle. Such optimization is particularly effective when reductions in the inert weight of upper stages can be accomplished.

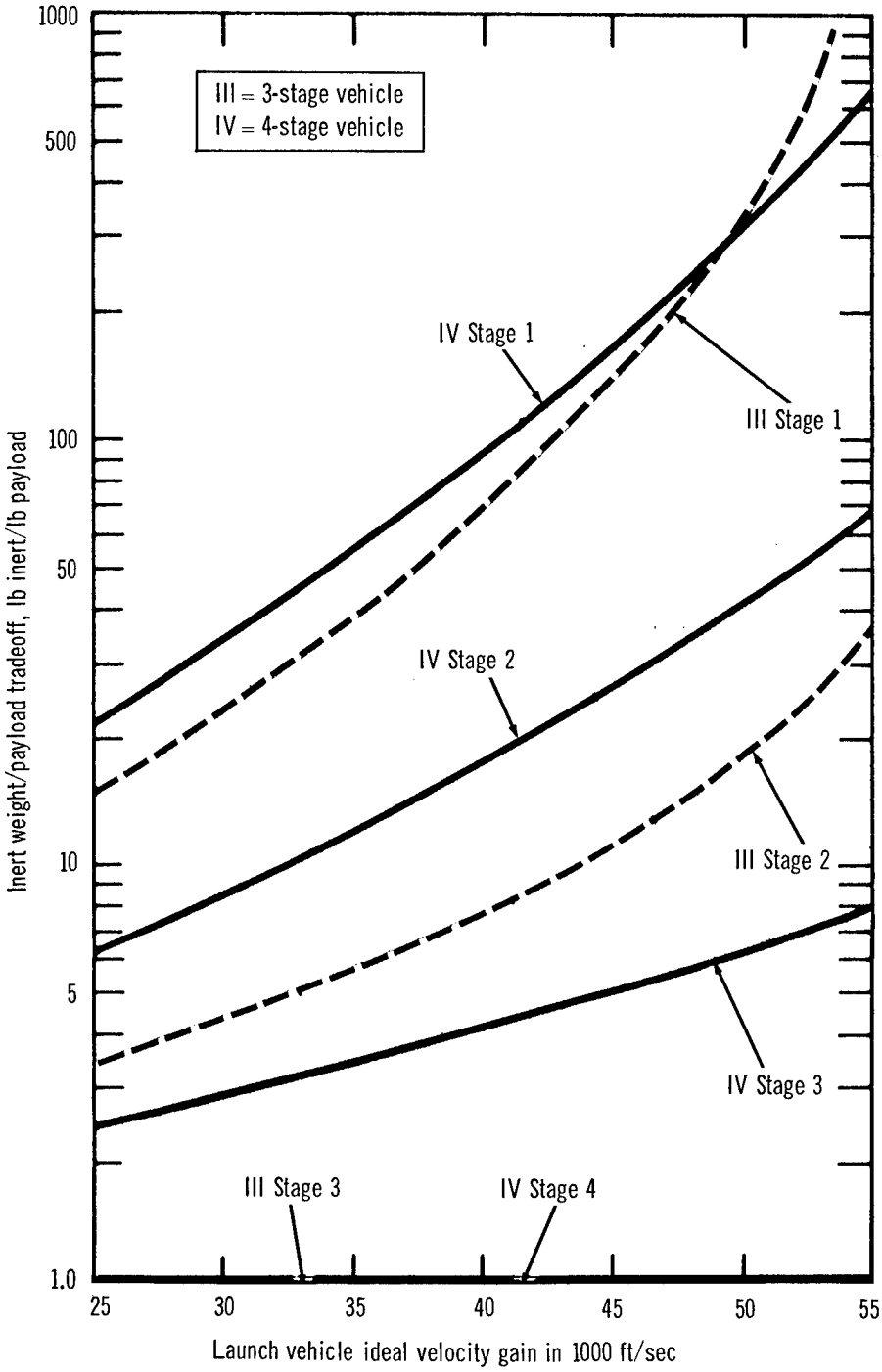

Figure 4.–Inert weight tradeoffs.

2.2 Material Selection

In this monograph consideration is limited to three types of structural materials for solid rocket motor cases: ferrous alloys, including the conventional quench and temper and the nickel precipitation hardening alloy steels; nonferrous titanium alloys; and aluminum alloys.

2.2.1 Case Loading

The initial selection of case material is generally the choice of the most efficient material that will satisfy the overall critical-loading condition at the critical operating temperature when the constraints of fracture mechanics are considered (sec. 2.2.2). Whether the critical case loading is internal pressure or buckling depends to a large extent on the mission application and the location of the case within the vehicle (ref. 23 and ref. 24, pp. 67-73). In single stage vehicles and upper stages of multistage vehicles, internal pressure is usually the critical-loading condition. Intermediate stages can be critical in internal pressure, buckling resistance, or stiffness. First stages are usually pressure critical; however, buckling and bending loads are high and may sometimes be critical (ref. 23).

2.2.2 Mode of Failure

2.2.2.1 Brittle Failure

Depending on the structural material selected, failure of the case may occur either as a brittle or a ductile failure (ref. 24, pp. 107-120). With the use of high-strength materials, premature brittle failures have occurred at stress levels significantly below the design service stress, sometimes with materials that demonstrate adequate ductility. In comprehensive reviews of approaches to design against brittle fracture, including the transition-temperature, stress-criteria, strain-criteria, and fracture-mechanics approaches (refs. 25 and 26), linear elastic fracture mechanics has been selected as the most applicable approach for the prevention of brittle fracture in high-strength material. A knowledge of this theory and its application is of basic importance to successful case design.

Discussion of fracture-mechanics theory is beyond the scope of this monograph. A clear understanding of the fundamental theory and its application in all aspects of case design, including material selection, selection of allowable working stress, evaluation of fabrication methods, evaluation of inspection and testing methods, and design of the case hydrostatic proof test, may be obtained from the material in references 25 to 30.

The precise application of fracture mechanics in any specific situation requires the knowledge or ability to develop information (ref. 25) that relates to the effect of temperature on fracture toughness in the range of interest; the location, size, shape, and orientation of the defect; the direction and magnitude of the stress applied to the defect; sustained-load and cyclic-load crack-growth characteristics of the material at the selected strength level and when subjected to the expected critical temperature and corrosive environments; the relative geometry of the structural member; and the magnitude of any residual stress.

Additional developments and considerations are required for the application of fracture mechanics to conditions that are associated with the large plastic deformations in the area of the defect (ref. 25), and that are generally associated with very-high-fracture-toughness materials.

2.2.2.2 Ductile Failure

The use of material that is subject to ductile failure is generally based on the determination of the actual material strength as fabricated in the pressure-vessel form. This determination is usually accomplished by testing flat uniaxial or biaxial test specimens or by performing either full-scale or subscale burst tests (ref. 24, pp. 120-124).

Pressure-only pressure-vessel burst tests are commonly used to establish the ultimate strength of the motor case. However, the pressure-only burst tests will result in most instances in an overestimation of the burst strength of the actual case when it is subjected to the flight combination of internal pressure and external loads (ref. 31). More accurate ultimate-strength data are obtained when the burst tests are carried out under loading that simulates actual flight conditions.

2.2.2.3 Failure Histories

In the rapid technological advancement of motor case materials and fabrication techniques, and the optimization of design at lower safety factors, some structural failures of motor cases are inevitable. However, past experience should be used wherever possible to prevent future failures. To this end, some of the most frequent general causes of motor case failures are reviewed.

Several causes of high-strength-steel-case failures are discussed by Hendron (ref. 32, pp. 95-98). These failures indicated either the improper use of available and effective nondestructive testing (NDT), or the inability of NDT to detect certain adversely oriented defects or very tight cracklike defects. In one instance, a 1/32-in.-long crack in the heat-affected zone of a girth weld caused brittle failure. The image of the crack was visible

in the X-ray record but was undetected. In another case, failure was attributable to a 1/16- by 3/32-in. hot crack that was not detected because the X-rays were made with excessively high voltage to reduce exposure time, which produced a low-contrast film; and magnetic-particle inspection was conducted with less sensitive dry magnetic powder. A failure was caused in one case when an overmachined condition went undetected because the available inspection equipment was not used. In another case, heat and shrinkage pressure caused semifusion of the unpenetrated weld faces of a girth weld. This semipenetration was not detected by X-ray, magnetic-particle, eddy-current, or penetrant inspections; subsequent welds were inspected by etching the back of the weld. In another situation, an accidential arc strike caused failure. The inspector assumed that the defect was purely a surface condition, and it was not investigated further.

The failure of a large motor case (ref. 33) originated from an undetected defect about 1.4 in. by 0.10 in. in the heat-affected zone of a longitudinal weld associated with an area of weld repair. An investigation showed that the fracture toughness of the weld was insufficient to tolerate cracklike defects as large as those that actually occurred in the motor case. It had been believed that much smaller defects consistent with the defect tolerance of the fabricated case could be reliably detected. There is a possibility that the defect that caused the failure, and others that were not detected in the nondestructive tests accomplished prior to the aging heat treatment, might have been observed had the inspections been repeated after the aging treatment. The heat treatment might have increased the defect void area, resulting in an increased probability of detection.

A compilation of data from some failure reports of the D6ac steel and 6A1-4V titanium alloy Minuteman first and second stages are discussed in reference 34. The important point is that, although the Minuteman cases are designed, fabricated, and inspected with a high degree of sophistication, failures still occurred from crack propagation. Most of the flaws were detected by nondestructive-testing techniques, but were disregarded in some instances. The type of flaw associated with material inhomogeneity is not generally detectable by nondestructive-inspection techniques, but must be controlled by material and process evaluation and by rigorous application of material and process controls. In particular, the anticipation that flaw sizes may decrease as production experience is gained must be balanced against the knowledge that any new production shortcuts may introduce other types of flaws.

The work reported in reference 35 considered other causes of failure, such as the use of parts beyond the design service condition, improper processing and inspection during fabrication, improper inspection of material properties (such as inclusion content), and failure to determine actual material properties.

2.2.3 Fatigue

The rocket motor case is subject to the possibility of low-cycle fatigue during a minimum of at least two pressure cycles at high stress levels (i.e., hydrostatic test and motor firing) or, in pulse and controllable-thrust motors, during the 30 or more pressure cycles that may occur. High-cycle fatigue can result from the dynamic environment, either self-generated by the motor stage or resulting from the interaction of the stage with the vehicle. Usually, the critical flight exposure occurs during booster-stage burn, while the vehicle is within the sensible atmosphere; examples of typical vibration sources and exposure levels are as follows:

(1) Propellant burn—100 to 1000 Hz for burn duration.

(2) Thrust-vector control, flight maneuvers, wind gusts—1 to 40 Hz for 2 min.

(3) Acoustic—40 to 2000 Hz for 1 to 2 min.

Thermal cycling (e.g., solar heating while orbiting a planetary body and heating during sterilization (secs. 2.2.6.1 and 2.2.6.4, respectively)) may also result in conditions where fatigue is a design factor.

Motor case structural failures caused by high cycle fatigue have seldom occurred within intended service requirements, but fatigue induced failures have occurred at specific areas where equipment and components were attached. However, brittle failures of the pressure vessel have been encountered under low-cycle, high stress conditions. For typical fatigue design, case material is selected on the basis that its known fatigue properties are commensurate with the fatigue loading requirements.

2.2.4 Fabrication Considerations

Any of the different processes that may be used to fabricate the rocket motor case can produce changes in the characteristic properties of a structural material exposed to it. The resulting property changes may be desirable or undesirable for the intended use, depending on the material, the process, and the reaction of the material. Selection of a fabrication process for a given material capitalizes on the potential benefits from the process and minimizes the adverse effects. When material response to the intended fabrication process is unknown or not well established, the material is evaluated by tests as described in sections 2.4 and 2.5. The following paragraphs discuss some examples of fabrication considerations.

Work hardening associated with forming operations may degrade structural materials in some instances by increasing the material strength level. The increase in strength level may reduce fracture-toughness properties of the material below acceptable levels. In other

circumstances, the work hardening associated with forming (e.g., shear spinning) may be used to advantage with a high-toughness, work-hardenable material whose strength level can be increased without loss of acceptable fracture-toughness properties.

A welded structural material will usually experience a significant change in mechanical and physical properties depending on the welding process used. Commonly used processes are gas tungsten arc welding (GTAW), gas metal arc welding (GMAW), electron beam (EB), submerged arc (sub arc), resistance (spot), and several types of brazing. The welding process is selected to produce adequate tensile strength and fracture-toughness properties in the weld and in the heat-affected zone of the case material when evaluated with a specific weld joint configuration and weld thermal treatment. The higher heat input of the submerged arc and gas metal arc welding processes (as compared with the gas tungsten arc process) may degrade both the grain structure within the weld and the tensile and fracture-toughness properties of the metal in the weld and in the heat-affected zone. Although the gas tungsten arc process requires more welding time (less weld deposit per pass compared with the GMAW and sub-arc processes), it is used when the highest quality weld with better fracture toughness is desired. When adequate weld (and heat-affected zone) characteristics and properties can be obtained, the GMAW and sub-arc processes are more cost effective than GTAW. Electron beam welding is advantageous in minimizing distortion and heat-affected zones. Preheat or postheat or both is generally required for high-carbon, low-alloy steel welds over 0.100-in. thickness; however, preheat and postheat may be required for welds 0.100 in. thick and less to preclude weld cracking, depending on the material; weld process; and restraint characteristics of the particular weld. If preheat or postheat is accomplished with a torch, oxidation can reduce weld quality. Automatic electric heating is desirable in most instances, because rheostat-controlled electric heaters provide both proper temperatures and uniform heating. Backup tools made of copper, stainless steel, or refractory-coated metals are used to achieve high, low, or negligible heat dissipation, respectively, as required for control of final as-welded dimensions and properties of the weld.

2.2.5 Case-Configuration Considerations

The motor case configuration can have a significant influence on material selection. For instance, the size of existing quench and temper heat-treating facilities with controlled atmosphere limits their use to motor cases of 140-in. diameter or less. Therefore, the material for cases above this size limit is selected from materials that can be fabricated without a final quench and temper heat treatment. (See table I.)

Also, the number and location of case welds are influenced by the relation of case configuration to the sheet or plate size availability of the material. The ability consistently to produce reliable parent material and reliable welds varies with the different melting practices used to produce the material and with the welding processes used to weld the

material. In addition, metal forming characteristics vary with different materials and are influenced by forming method, material thickness, material hardness and ductility, and formed shape.

2.2.6 Environmental Considerations

One of the most important aspects of case design for environmental conditions is a detailed review of all possible harmful environments and chemicals that may be encountered during the life history of the motor case from production of the structural materials through final service use, followed by a conscientious endeavor to minimize or eliminate these encounters. Such potentially harmful exposures are too numerous to cite; however, some limited examples include:

(1) the use of dye-penetrant fluid with high chloride and sulfide content which may result in cracking of titanium during subsequent heat treatment if all traces of the fluid are not removed

(2) the use of water (including distilled water) as the hydrostatic test fluid for unprotected high-strength steel cases which may result in stress-corrosion cracking

(3) the use of uncontrolled atmosphere in heat-treatment furnaces can cause either carburization or decarburization in some high-strength steels and the introduction of interstitial elements in titanium

(4) the use of chlorinated cleaning solvents on titanium, which may cause cracks to develop during subsequent thermal treatment (ref. 36)

(5) exposure to methanol and nitrogen tetroxide, which can cause stress-corrosion cracking in titanium

2.2.6.1 Thermal Environment

The motor case is subject to heating from several sources: aerodynamic heating (general boundary-layer heating and local heating at appendages); internal heating from propellant burning; both radiant and conductive heat during handling, assembly, and checkout on the launch pad and during interplanetary travel; and sterilization for planetary exploration (sec. 2.2.6.4). A design safety factor is not usually applied to the heating environment (ref. 37). Motor cases in current use may be subjected to temperatures during launch ranging from 300° to 600° F; higher temperatures are expected in the future with higher performance vehicles (ref. 24, p. 136).

The most frequently encountered influence of thermal environment on a material is the change in mechanical properties of the material with a change in temperature. The rates of heating and structural loading influence the mechanical properties of the material for any specific application. The thermal conductivity, thermal diffusivity, and the thermal coefficient of expansion of the material (and to a lesser extent, the specific heat of the material and absorptivity and emissivity characteristics of the surface) are usually considered when applications involve thermal stress or thermal fatigue (ref. 24, p. 140) (sec. 2.2.3).

Differential and cyclic heating can cause thermal stresses and thermal fatigue in the motor case structure and may be particularly harmful in areas of stress concentration. Also, the assembly of structural materials having different coefficients or thermal expansion can result in high stresses during heating or cooling. In practice, thermal insulation frequently is used to minimize the range of temperature changes, or the case is designed to allow for the thermal stress and expansion.

2.2.6.2 Corrosive Environments

The corrosion frequently encountered includes general corrosion or pitting, galvanic corrosion, stress-corrosion and cracking, and hydrogen embrittlement. Extensive discussions on the types of corrosion, causes of corrosion, and methods of corrosion control are found in references 38 and 39.

General corrosion and chemical attack can occur from moisture in the environment or from chemicals used in cleaning agents, various types of ink markers, carbon pencils, nondestructive-inspection fluids, and thrust-vector-control liquid injection fluid. Table 18-3 of reference 40 shows the compatibility of various structural metals with storable liquid fuels and oxidizers. This information is of interest when solid rocket motors may be exposed to vapors from other motors in the vehicle. Also, the grouping of various similar and dissimilar metals is shown in reference 41, where permissible couples are defined with regard to galvanic action.

Protection of the motor case from attack by unavoidable moisture and chemicals is usually obtained by covering the surface with corrosion-inhibiting compounds such as epoxy or zinc chromate primer systems or by application of a surface plating. Temporary protection is usually afforded by applying asphalt-based, solvent-removable compounds or strippable plastic compounds. Prevention of galvanic corrosion between two incompatible dissimilar metals is usually accomplished either by separating the two metals with barrier materials, shims, washers, or protective finishes, or by encapsulating the joint with a sealing compound.

Stress-corrosion cracking is a complex interplay of tensile stress and corrosion that leads to cracking in a metal or alloy within some period of time that is dependent upon the material,

the environment, and the magnitude of the applied or residual stress. The environments that are most conducive to stress-corrosion cracking produce highly localized attack and may not produce any significant, general surface corrosion. Environments that have caused stress-corrosion cracking in various alloys are shown in table 1.1 of reference 42; however, all environments for all alloys are not included in this table. The severity and rapidity of stress-corrosion cracking are accelerated by the presence of a prior crack or other surface discontinuity (ref. 43). A recently developed approach for prevention of failure caused by stress corrosion is to restrict the level of stress intensity at a crack to a level at or below the stress intensity (threshold) that will produce extension of the crack (ref. 44).

Hydrogen embrittlement can occur from hydrogen inherently present as a result of steel production and pickling or plating operations. Also, steels that are cathodically protected against corrosion can absorb sufficient hydrogen to promote brittle failure. Generally, higher strength materials are more readily affected by hydrogen, and are subject to hydrogen-induced brittle failures at relatively low stress levels (ref. 45).

2.2.6.3 Space Environment

Other than thermal effects, the space environment factors that are considered in the selection of the motor case structural material are electromagnetic and elementary-particle radiation, meteoroid impact, and the vacuum condition. In current applications, the space environment is not generally a critical factor in case design. It should be emphasized that the existing limited knowledge of the space environment is being broadened continually. Therefore, the state of the art discussed here is subject to change.

2.2.6.3.1 Radiation

Exposure to radiation can result in embrittlement of a metal, changes in its physical properties, and a decrease in its creep rate (ref. 40, p. 506). The mechanical properties of a very thin surface layer may be damaged when exposed to the inner region of the Van Allen belt or to solar flares (ref. 24, p. 142; ref. 40, p. 507).

Sputtering can cause thickness loss in metals and can seriously affect the emissive characteristics of the surface (ref. 40, p. 496); estimates of the surface loss per year range from 0.01 to 8000 Å (ref. 24, p. 142).

2.2.6.3.2 Meteoroid Impact

Consideration of the effects of meteoroids is based on the current standard meteoroid environment given in NASA SP-8013 (ref. 46).

On the basis of available information, surface erosion from meteoroic dust is not expected to be a problem except where absorptivity and emissivity characteristics of the case surface may be design considerations. A more serious problem is the impact of large particles on the case. This impact may cause damage leading to rupture during firing and may also cause ignition or explosion of any unburned propellant remaining in the case. A method for calculating, on a probability basis, the membrane thickness required to prevent meteoroid penetration and back-surface spallation is shown in reference 40, pp. 500-505, for aluminum; calculations for other structural materials are similar.

McMillan (ref. 47) has reported on a theoretical and experimental program that evaluated high-velocity impact on a structure composed of two thin metallic sheets placed some distance apart. This program generally concludes that two sheets provide a greater amount of protection than does a quantity of sheets within the same total spacing, established on an equal-weight basis. It was also observed that a honeycomb structure placed between the two metal sheets could cause channeling of the projectile-shield debris and resulted in no apparent increase in impact resistance.

The work discussed in references 40 and 47 is concerned with the impact of projectiles on unpressurized structural members. Additional theoretical and experimental investigations are required to establish more definitive requirements and guidelines for the design of a motor case that may be pressurized at impact or that may be subjected to one or more pressurization cycles subsequent to impact.

2.2.6.3.3 Space Vacuum

Evaporation.—Appreciable diffusion is not expected to occur at temperatures below the creep temperature. Surface roughening from grain orientation can occur; this roughening is not expected to have structural significance, but can affect the reflectivity characteristics of the material. Material loss by direct evaporation is insignificant for the materials of interest (ref. 40, p. 496). Some protective coatings such as certain oxides, cadmium, and zinc can be degraded in the vacuum environment (ref. 40, p. 498). Such degradation may be a problem in some space missions where protection of the case from harmful environments discharged by the space vehicle may be required, or where the thermal and electrical properties of the surface are altered by the degradation of the coating.

Surface film loss.—Removal of the adsorbed gas layer from the metal surface has an insignificant effect on tensile strength, except in a very thin section of about 100 μm or less (ref. 40, p. 499). Fatigue life has been reported as both changed and unchanged in the vacuum environment; however, a loss of fatigue strength has never been sufficiently demonstrated (ref. 40, p. 499).

2.2.6.4 Sterilization for Planetary Exploration

Prelaunch sterilization of rocket motor components is required to preclude the contamination of planet environments (ref. 48), depending on mission application. The sterilization process may require dry-heat cycles up to 295° F for 36 hr (ref. 49) in combination with baths of ethylene oxide and Freon 12 (ref. 50). The primary concerns in the selection of materials suitable for enduring sterilization are the likelihood of thermal fatigue, the possible degradation of mechanical properties that may occur as a result of the long exposure to elevated temperature, and the deleterious effect of the chemicals used in the sterilization process.

2.2.7 Material Properties

A summary of the properties of some of the alloys commonly used in the aerospace industry is provided in table I. A more complete treatment of material properties (including fracture toughness), forming characteristics, and weldability may be found in references 51 and 52.

2.2.7.1 Steel

The commonly accepted sources of property data for some metals used in motor case design are reference 51 and references 52 to 55. These documents also provide the designer with general information on both heat-treatment requirements and the influence of various environments on the material.

The conventional quench and temper steels have been used extensively in the past, and a great deal of information is available on material properties and fabrication-process experience at strength levels up to about 240 ksi. The 9 nickel-4 cobalt quench and temper steels are currently available in 0.250 to 0.450 carbon grades (ref. 56), with tensile strengths in the range of 180 to 220 ksi and 260 to 300 ksi, respectively. The 0.250 grade can be cold-formed, machined, and welded in moderate to heavy sections in the fully heat-treated condition. The 0.450 grade (primarily a forging alloy) should be welded in the annealed or normalized condition with preheat and postweld heat treatment to obtain desirable properties. The 9 nickel-4 cobalt steels and any other work-hardenable steels can develop residual stresses depending on the fabrication processes and thermal treatments used during case fabrication.

Table I.–Uniaxial and Plate Room-Temperature Properties of Common Aerospace Alloys

Material	Design yield strength, ksi	Modulus of elasticity, 1000 ksi	Density, lb/in.^{3}	Heat treatment	Remarks
HY steel:					
HY-80	80	29.5	0.285	Quench and temper	No heat treatment required after welding
HY-130/150	130-150	29.5	.285		
Low alloy steel:					
4130	150-180	29.0	.283	Quench and temper	Heat treatment required after welding
4335V	180-200	29.0	.283		
D6aC	180-240	29.0	.283		
Maraging steel:					
Grade 200	200	27.5	.289	Solution anneal and age	Age only after welding
Grade 250	240	27.5	.289		
Grade 300	280	27.5	.289		
HP steel:					
9 Ni-4 Co-0.250	180-220	28.5	.28	Quench and temper	Heat treatment required after welding for 0.450 alloy
9 Ni-4 Co-0.450	260-300	28.5	.28		
Titanium:					
Ti-6A1-4V	150	16.0	.167	Solution anneal and age	Age before weld; stress-relieve after welding
Aluminum alloys:					
2000 Series	35-65	10.3	.10	Solution heat treatment and age	Heat treatment required after weld
5000 Series	30-40	10.3	.10	No heat treatment	
6000 Series	37-47	10.3	.10	Solution heat treatment and age	Heat treatment required after weld
7000 Series	60-68	10.3	.10	Solution heat treatment and age	Resistance welding only.

The most widely used Ni-Cr-Mo-V material (HY-150) exhibits a minimum yield strength of about 130 ksi, and is processed and used in fabrication similarly to the 9 nickel-4 cobalt-0.250 steel. The primary advantage of this material is its high fracture toughness; with this property it may be possible to have a leak-before-failure condition that would minimize or eliminate catastrophic case failure (ref. 57) during hydrostatic proof test.

The 18-percent nickel maraging steels are available in strengths ranging from 200 to 300 ksi. Their advantages over the high-strength quench and temper steels (refs. 58 to 60) include good forming and forging characteristics of the annealed alloy, heat treatment at low

temperatures (about 850° to 950° F) with ambient-air cooling, good dimensional-stability characteristics during heat treatment, lack of decarburization, and heat treatment without the necessity for a controlled atmosphere. These steels may be welded, including weld repair, in either the annealed or heat-treated condition, and still retain good strength and toughness properties. Local aging of the weld is accomplished when welding is done in the heat-treated condition. The 12-percent nickel maraging steel with minimum yield strength from about 150 to 180 ksi was evaluated as a possible motor case material candidate along with the 18-percent nickel, 9 nickel-4 cobalt, and Ni-Cr-Mo-V steels (ref. 61). The principal difference between the 12-percent nickel and the 18-percent nickel maraging steels is the potential for increased fracture toughness at the lower strength of the 12-percent nickel steel; however, a tendency to crack was evident with the 12-percent nickel steel during welding (ref. 61).

To establish references for all existing fatigue data for the candidate structural materials is beyond the scope of this monograph. In addition, fatigue data are not available for all materials at all required test conditions, although some data are contained in references 51, and 53 to 55. The uniaxial and biaxial low-cycle fatigue properties of 301 stainless steel, AM-355 stainless steel, 6A1-4V titanium, and 300-grade maraging steel have been evaluated and compared in specimens fabricated from material 0.50 and 0.125 in. thick, respectively; in addition, all but the 300-grade maraging steel were evaluated in static and fatigue tests of cylindrical pressure vessels made from material 0.80 to 0.125 in. thick (ref. 62).

2.2.7.2 Titanium

Titanium alloys have been used and are currently considered for use in solid rocket motor cases primarily because their strength-to-density ratio offers the advantage of increased vehicle performance. In comparison to steel with comparable geometry, the titanium alloys provide less resistance to buckling. General material-property data and design considerations in the use of titanium alloys may be obtained in references 52, 55, and 63. Current alloys are available with ultimate strengths to about 190 ksi. The alloy generally exists in three forms, or combinations: (1) alpha, or single-phase, non-heat-treatable alloy up to 130-ksi ultimate strength; (2) alpha-beta, dual-phase, heat-treatable to 180 ksi; and (3) beta-phase, heat-treatable to 190 ksi. The forming characteristics and weldability of these materials are discussed in reference 36, pp. 3-5. Titanium alloys generally are not susceptible to corrosion but experience has shown that certain compounds under some conditions can produce stress corrosion in titanium alloys (ref. 36, pp. 35-43).

Considerable experience has been obtained in the use of the alpha-beta 6A1-4V titanium alloy, including its use in the second-stage Minuteman motor. In the conventional solution-annealed and aged condition (heating to just below the 1800° F beta transition,

rapid cooling to room temperature, and reheating to 1000° F), the 6A1-4V titanium microstructure consists of an equiaxed alpha-beta phase in a transformed beta matrix with good ductility. However, recent studies using fracture mechanics indicate that a platelet structure obtained by slow cooling from above the beta transition is advantageous from the standpoint of fracture toughness (plane-stress toughness K_c may be increased 40 percent or more). Where subsequent forming of the finished product is not a major consideration, the increased toughness may offset the loss of tensile ductility in the beta-processed material. Beta processing will probably be an advantage in mill products of moderately heavy cross section (e.g., extrusions, forgings, and plate) as opposed to thin-gage sheets (ref. 63).

The biaxial-strength properties have been improved considerably by use of a special type of anisotropy (textured titanium) obtained by preferred crystallographic orientation developed as a result of deformation in the production of the material. The biaxial fracture strengths of 6A1-4V titanium at room and cryogenic temperatures have exceeded the uniaxial tensile strength by 33 percent, and increases of 71 percent have been obtained for 5A1-2.5 Sn titanium (ref. 64).

2.2.7.3 Aluminum

Although not generally used in motor cases for space vehicles, aluminum alloys may be useful for small cases and for cases where corrosion may be a specific design problem. The material exists in both heat-treatable and non-heat-treatable alloys, with yield strength properties ranging from about 35 to 70 ksi (see table I).

The mechanical and physical properties of various aluminum alloys, together with special considerations and cautions on the use of the aluminum alloys, are provided in references 52 and 55. Reference 52 also contains comments on formability, machining and grinding, welding, and heat treatment of specific alloys.

Stress corrosion is a particular concern and must be carefully evaluated when an aluminum alloy is used as the motor case structural material (sec. 3.2.6.2.3).

2.3 Case Design

2.3.1 General Case Design

The basic principles of solid rocket motor case design and analysis are essentially the same as those of the plate-and-shell approach that has been used for many years in the design and analysis of boiler-type, pressure-containing structures and aircraft-type structures. As compared to the boiler-type pressure-vessel design, however, the motor case design is

involved with a complex interplay and tradeoff among overall vehicle performance, compatibility with all other vehicle systems and components, and cost. Greater sophistication and more attention to detail in all aspects of motor case design, analysis, and fabrication have been brought about by the necessity of obtaining significantly greater structural efficiencies through the use of high-strength materials and low design safety factors and by the requirement that the motor case must operate reliably while exposed to extreme thermal, corrosive, dynamic, and space environments.

Recently, improved methods of analysis that can consider great numbers of design variables through the use of electronic computers have provided the motor case designer with the ability to analyze, in a reasonable time, more complex load junctions and to treat structural shapes in much smaller elements. The more complete knowledge of biaxial-stress distributions, resulting from the use of these improved techniques, has permitted the optimization of structural design with retention of high reliability.

The catastrophic brittle structural failure by crack propagation at stresses below the material yield strength, long a problem in structural design, is more acute in rocket motor case design because of the emphasis on light weight and large size. A significant amount of research and development has been devoted recently to obtaining new or improved high-strength structural materials and to developing a better understanding of the behavior of high-strength materials in the biaxial-stress state. One of the most important developments in this area has been the growth of fracture-mechanics technology, which provides the case designer with a material property (fracture toughness) and a method of analysis for predicting the failure-mode behavior of a high-strength material containing a defect (sec. 2.2.2.1). The intelligent application of fracture-mechanics theory coupled with an integrated, fracture-mechanics-oriented inspection and testing program (sec. 2.5.2) enables the case designer to reduce substantially the probability of catastrophic case failure that can occur with the use of high-strength materials.

Comprehensive instructions on the methods of case design and analysis are individually developed by the various propulsion contractors and other members of the aerospace community, and are not available for reference or discussion. A general background on case design requirements and techniques may be found in references 65 and 66.

2.3.1.1 Design Definitions

The design of a motor case is usually established and then defined on the basis of the relationship between the loading conditions that will be experienced by the case and the capacity of the case to withstand these loads. Limit load, design safety factor, design load, allowable load, and margin of safety are case-design terms that are used with respect to this relationship between case loading and case loading capacity. These terms, as they are used in the monograph, are defined in the following paragraphs.

Limit Load.–The limit load is the maximum specified or calculated value of a service load or service pressure (excluding hydrostatic-proof-test pressure) that can be expected to occur under (1) the maximum 3-standard-deviation operating limits of the motor or vehicle including all environmental and physical variables that influence loads, (2) the specified maximum operating limits of the motor or vehicle, or (3) the maximum motor or vehicle operating limits defined by a combination of 3-standard-deviation limits and specified operating limits.

Design safety factor.–The design safety factor is an arbitrary multiplier greater than 1 applied in design to account for unexpected design contingencies, e.g., slight variations in material properties, fabrication quality, and load distributions within the structure.

Design load (or pressure).–The design load (or pressure) is the product of the limit load (or pressure) and the design safety factor.

Design stress.–The design stress is the stress, in any structural element, resulting from the application of the design load or combination of design loads, whichever condition results in the highest stress.

Allowable load (or stress).–The allowable load (or stress) is the load that, if exceeded in the slightest, produces case failure. Case failure may be defined as buckling, yielding, or ultimate failure, whichever condition prevents the case from performing its intended function. Allowable load is sometimes referred to as criterion load or stress.

Margin of safety.–The margin of safety (MS) is the percentage by which the allowable load or stress exceeds the design load or stress. The margin of safety is defined as

$$MS = \frac{1}{R} - 1$$

where R is the ratio of the design load or stress to the allowable load or stress.

To illustrate these definitions, sample calculations for a solid rocket motor case cylinder section subjected only to internal pressure are provided.

(1) Design assumptions

(a) Failure criterion is defined as ultimate tensile failure.

(b) Ultimate tensile strength of the material is 200 000 psi (allowable stress).

(c) Limit internal pressure, often referred to as the maximum expected operating pressure (MEOP), is specified as 800 psi.

(d) The design safety factor is specified as 1.25.

(e) The motor case cylinder diameter D is 40 in.

(f) Cylinder-wall thickness t is 0.1 in.

(2) Sample case cylinder design calculations

(a) Design Pressure P = MEOP × design safety factor
= 800 psi × 1.25 = 1000 psi

(b) Cylinder design hoop stress $(\sigma_h) = \frac{PD}{t2}$

$$\sigma_h = \frac{1000 \text{ psi} \times 40 \text{ in.}}{0.1 \text{ in.} \times 2} = 200\ 000 \text{ psi}$$

(c) $$\text{MS} = \frac{1}{R} - 1 = \frac{1}{\frac{\text{Design stress}}{\text{Allowable stress}}} - 1 = \frac{1}{\frac{200\ 000}{200\ 000}} - 1 = 0$$

(d) It is assumed that all design parameters specified are maintained constant, except that t is increased to 0.125 in.; then

$$\text{Cylinder design hoop stress } \sigma_h = \frac{1000 \text{ psi} \times 40 \text{ in.}}{0.125 \text{ in.} \times 2} = 160\ 000 \text{ psi}$$

and

$$\text{MS} = \frac{1}{\frac{160\ 000}{200\ 000}} - 1 = 1.25 - 1 = +0.25$$

2.3.2 Design Safety Factor

Ideally, design safety factors for motor case components would be fixed by determining analytically the values that would result in the desired probability of success in the intended application. In this structural-reliability approach, the design safety factor is defined as a statistical variable and is related explicitly to a definition of the uncertainties and randomness of the design variables. The design safety factor is related to the desired reliability with an associated confidence level (refs. 24, 67, and 68). Unfortunately, this analytical capability is still in the process of development, and there is no record of an actual application to a hardware program.

Instead, at the present time, a uniform design safety factor is established largely on the basis of engineering judgment, combined with prior experience in obtaining the desired level of reliability. Its value depends on the kind of service (manned or unmanned), type of loading (internal pressure or external load), and the mode of failure involved. Values of this factor in current use range from 1.1 at yield for unmanned application (ref. 24, pp. 100-102) to 1.5 at ultimate for manned vehicles (ref. 37).

The use of the uniform design safety factor in the aerospace industry has evolved principally from the combined influence of (1) aircraft design, where public safety and extended service life are prime considerations; (2) weapons system design, where performance is the prime consideration; and (3) space vehicle design, where reliability, cost effectiveness, and performance are the prime considerations.

2.3.3 Case End-Closure Configuration

The motor case end-closure (dome) configurations for cylindrical pressure vessels in general use are the hemispherical, ellipsoidal (refs. 69 and 70), torispherical (ref. 70), and Cassinian dome (ref. 71). The selection of the optimum design configuration is based on the need for or the desirability of one or more of the following: minimum weight, maximum enclosed volume, minimum depth (envelope constraint), cost (including all aspects of fabrication and tooling), and cylindrical diameter with respect to fabrication limitations. Each configuration has certain advantages worthy of consideration for a particular application (ref. 24, pp. 87-91).

2.3.4 Case Attachment Fittings

Attachment fittings may be required as part of the case design for three basic purposes: (1) to provide for assembly of segments of a segmented motor configuration, (2) to provide for the attachment of other components to the motor, and (3) to provide for attachment of the motor itself to a given structure. Various kinds of bolted, shear pin, lockwire, snap ring, and threaded attachments used to satisfy the first two functions are shown in figure 5; however, it is not intended to imply that these designs are the only designs used or that any design shown would be recommended for any specific application. The detail design of the attachment depends on the structural material used, the loads that must be reacted, and the reliability desired in the particular attachment. The structural efficiency, cost effectiveness, and reliability of several alternative designs are usually evaluated to select the optimum design for a particular application. Cost effectiveness of snap rings and threaded attachments, for example, generally decreases when their diameters are larger than about 10 and 14 in., respectively.

Attachment fittings are usually integral with the motor case (integrally formed with the structural membrane without welds, or a butt-welded insert or ring that becomes integral with the structural membrane), mechanically attached to the case, or added by means of an external sleeve. Integral fittings incorporated without the necessity for welding generally produce the lightest weight case because any reduction in strength that may be associated with welding is eliminated. Also, integral fittings of either welded or unwelded design generally provide a lighter weight case than fittings either mechanically attached or attached by means of an external sleeve because balanced designs that minimize local discontinuity

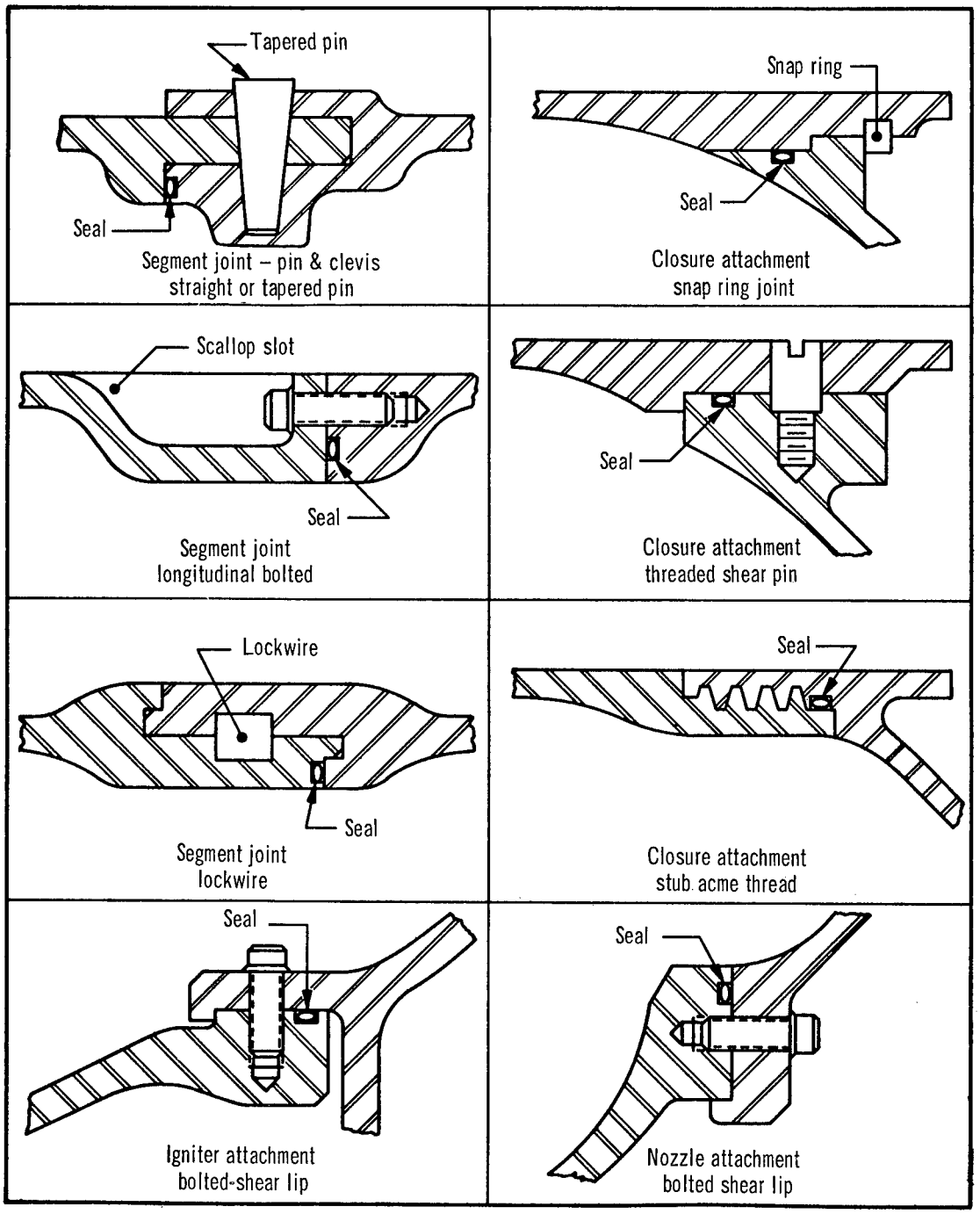

Figure 5.–Typical case attachments.

loads are usually obtainable only with integral fittings. The most cost-effective integral fitting is usually obtained when the fitting can be machined from a local thickness reinforcement. Machining local fittings from heavy-walled structures (e.g., attachment fitting in the center of the case cylindrical section) may have reduced tooling costs associated with production of the heavy-walled structure but requires the maximum amount of machining. Heavy-wall structures may be fabricated from any fabrication technique currently used within the size and force limitation of the particular technique. Depending on the fitting design requirements, shear spinning, closed-die forging, ring-roll forging, and the combination of hot conventional and shear spinning are typical of the fabrication techniques that may be used to obtain structural shapes with nonuniform cross section (local thickness reinforcements) from which integral attachments can be machined.

Fittings may be mechanically attached by welding the fitting to the surface of the case. When properly designed, welding provides a strong joint to support the required loads. The amount of case buildup (reinforcement) required is dependent on the case configuration in the local area and all internal and external loads that must be reacted at the local area. However, where heat treatment is required after welding to obtain the necessary strength level, close tolerances cannot be maintained because of the resultant distortion. The use of screws or bolts to attach fittings will permit total machining and heat treatment of case and fittings before the fittings are attached to the case. It is generally necessary, however, to apply these fasteners at an area of case reinforcement. Fasteners applied through the pressure vessel wall require development of reliable seals and, at best, impair the structural integrity and reliability of the case.

The use of external sleeves, strapping, or clamping to attach fittings enables casting of propellant into the motor prior to application of the fittings. Thus the attachment fittings impose no limitation on case fabrication methods. The fittings and straps are designed to withstand all loads independently. The fittings and straps impart external loads to the case as well as impose local discontinuity loads in the case (i.e., restrict the free expansion of the case under pressure); therefore, care is exercised to assure that the interactions of the case and fittings (and external sleeves, straps, or clamps) are adequately designed and analyzed to obtain the required structural integrity.

Protective devices are used to prevent damage to attachments (and fittings) during case handling and motor processing. The protective device is installed after final machining of an integral attachment flange or fitting, or after installation of a mechanically attached fitting or sleeve attached fitting.

2.3.5 Motor Case Loads

All motor case loads used in the case structural analysis (sec. 2.3.6) are design loads as defined in section 2.3.1.1. The origin and nature of these loads are summarized in the following sections.

2.3.5.1 Attachment Loads

The attachment of motor auxiliary equipment to the motor case, or attachment of the motor itself to other structures, can produce various combinations of tensile, compression, biaxial, bending, shear, and torsion loads, depending on the type and function of the case attachment. The loads associated with various attachments are summarized in the upper portion of table II.

Table II.–Motor Case Static Loads

Origin of load	Type of load
Attachments:	
Motor igniter, nozzle	Axial, bending, shear
Thrust vector control	Axial, bending, shear
Thrust skirt	Bending, shear
Clustering	Tension, compression, bending, shear
Staging	Bending, shear
Thrust-termination hardware	Biaxial, bending
Aerodynamic control surfaces	Tension, compression, bending, shear, torsion
Instrumentation, electrical, and destruct system hardware	Axial, bending
Internal and external loads:	
Internal pressure	Biaxial
Axial thrust	Axial
Thrust misalinement	Bending, shear
Thermal environment	Biaxial, bending, shear
Ground handling	Tension, compression, bending, shear, torsion
Vehicle mass, steady wind, and wind gusts on launch pad	Axial, bending, shear
Flight, maneuvering, and flight environment	Axial, bending, shear, torsion

The motor igniter is generally attached to a polar opening in the forward closure of the case. "Aft-end" igniters are usually attached to structure external to the motor or vehicle.

Single or multiple nozzles, either fixed or movable, are attached to openings in the case aft closure and can either be straight (parallel to the motor centerline) or canted at some angle to the centerline of the motor.

A thrust-vector-control (TVC) system may be incorporated in the solid rocket motor design to provide a capability for maintaining the vehicle in the proper trajectory. Local attachments for TVC-system equipment depend on the requirement for TVC and the type of TVC system used. The TVC-system equipment attached to the case can include nozzle actuators, fluid manifolds, fluid or gas lines, valves, and fluid tankage. Also, vehicle steering is sometimes accomplished using aerodynamic control fins located in the aft motor region or canard control surfaces in the forward area of the motor.

Ports for thrust termination or thrust reversal, when required, can be located in either the cylindrical or the closure section of the case; the ports are usually located in the forward closure of the case for maximum design efficiency. Exhaust stacks may be attached to the thrust-termination (or thrust-reversal) ports to channel the exhaust gas (e.g., provide passage through the interstage structure).

Some form of attachment normally is required to support the motor and to transfer the thrust load. For large motors comprising one of several stages, this consists of a skirt at the forward and aft ends. Skirts are often attached near the case equator and usually are integrally formed with the closure or cylinder, welded to the case, or bonded to the case. For smaller motors performing auxiliary functions, the use of attachments such as those described in section 2.3.4 produces an entirely different combination of loads, as discussed in section 2.3.6.2.

Motor staging and vehicle clustering structure are usually incorporated in the skirt regions, where load transfer can be accomplished more efficiently than is possible with attachment to the pressurized portion of the motor case. Various clustering concepts and the resulting case loads, primarily for large motors, have been evaluated in references 72 and 73.

Vehicle staging (stage separation) is accomplished by first severing the structural connection between the stages with explosive bolts or with linearly shaped charges and then providing a separation force using thrust reversal of the lower stage, staging rockets in the lower stage, combustion pressure of the upper stage, or any combination of these methods. The use of thrust reversal does not result in any static loads accountable to motor staging.

Instrumentation, electrical, and destruct-system hardware may be attached by bonding or mechanical methods to any area of the case; however, areas of reinforcement with minimum strain are usually selected.

2.3.5.2 Internal and External Loads

The magnitude of the internal and external loads acting on a motor case depends on the particular design, mission application, and location of the stage within the vehicle. Two types of loads, static and dynamic, act on the motor case (ref. 24, pp. 70-73). Structural dynamic loads are discussed in section 2.3.7. The important rocket motor case static loads are summarized in the lower portion of table II. It should be recognized, however, that all loads shown in table II may not occur, or may not occur simultaneously.

External loads, such as aerodynamic forces and maneuvering loads, have the most important effect on case structural design while the vehicle is traveling through the sensible atmosphere between lift-off and about 200 000 ft. Maximum dynamic pressure usually occurs at an altitude of about 35 000 to 40 000 ft (ref. 24, pp. 69-70).

2.3.6 Structural Analysis

The capability of the case structure to withstand all the loads encountered in storage, shipping, handling, launch, and flight is evaluated and verified by a variety of analytical techniques. The use of any combination of the various methods of structural analysis is usually determined on the basis of the needs of the particular application and the cost effectiveness of the analysis.

2.3.6.1 Thin-Shell Structure

Nearly all analyses of rocket motor cases rely on computer programs to evaluate the elastic stresses in thin-shell structures. All general programs incorporate a linear elastic theory based on Love's first approximation for thin shells (refs. 74 to 78). It is not apparent that a higher order theory of shells will yield more accurate results (ref. 79 and 80), or that there is a single computer program significantly superior to other programs (ref. 81) for the axisymmetric analysis of rocket motor cases.

Although elastic theory is normally used in rocket motor case structural analysis to determine maximum stresses, discontinuities (sec. 2.3.6.3) are on occasion analyzed by plastic or elastic-plastic analysis (refs. 82 and 83) to determine maximum strain.

The thin-shell analysis, as generally programed for computer solution, does not automatically include the damping effects on the discontinuity shears and moments that are attributed to the meriodional-tension load (ref. 84). The analytical solution for the meriodional-tension effect is nonlinear and, in some cases, may be unnecessary for the structural verification of the design. In some designs, the effect is less than 10 percent, the indicated maximum stress being higher when the stiffening effect caused by axial load is ignored. An example of a large motor case cylinder-closure-skirt, Y-ring-junction stress distribution is shown in figure 6, with and without the meridional-tension stiffening. The meriodional-tension effect resulted in a maximum 21 percent decrease in the apparent stress. The influence of the axial load on deflection is illustrated in figure 7.

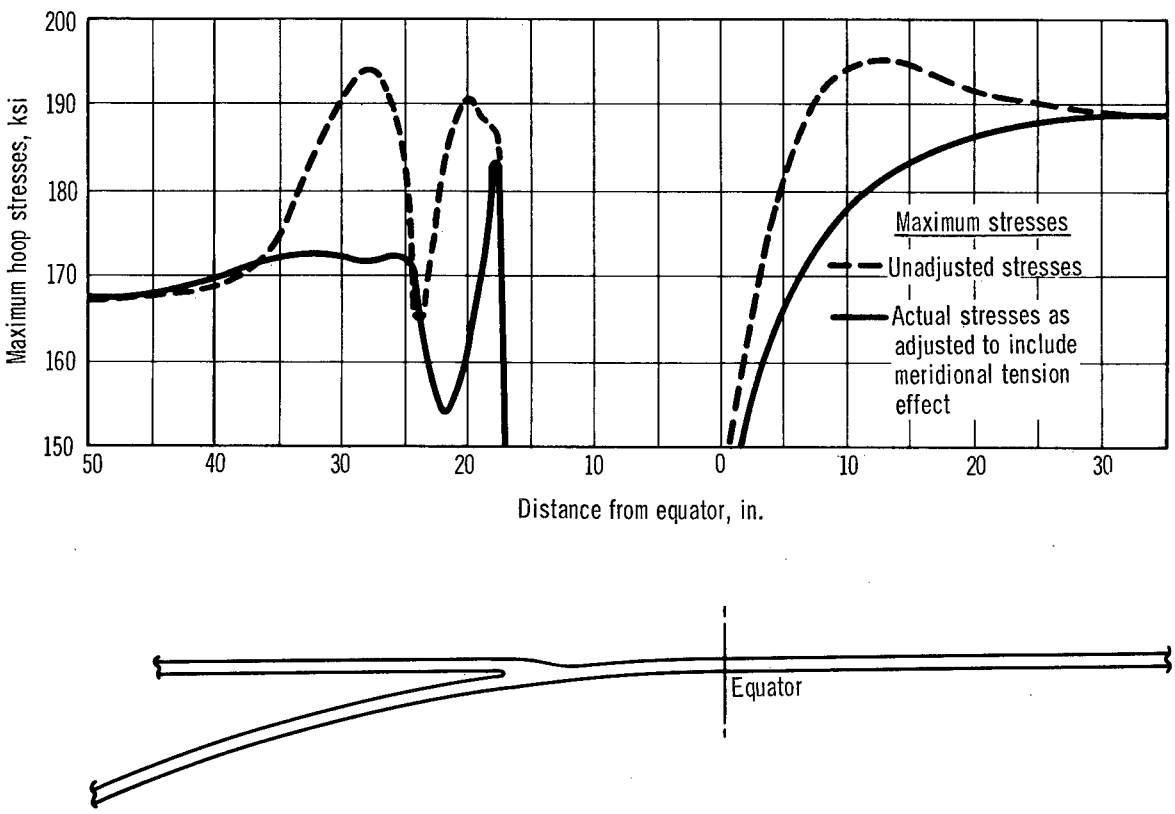

Figure 6.–Motor case cylinder–closure transition.

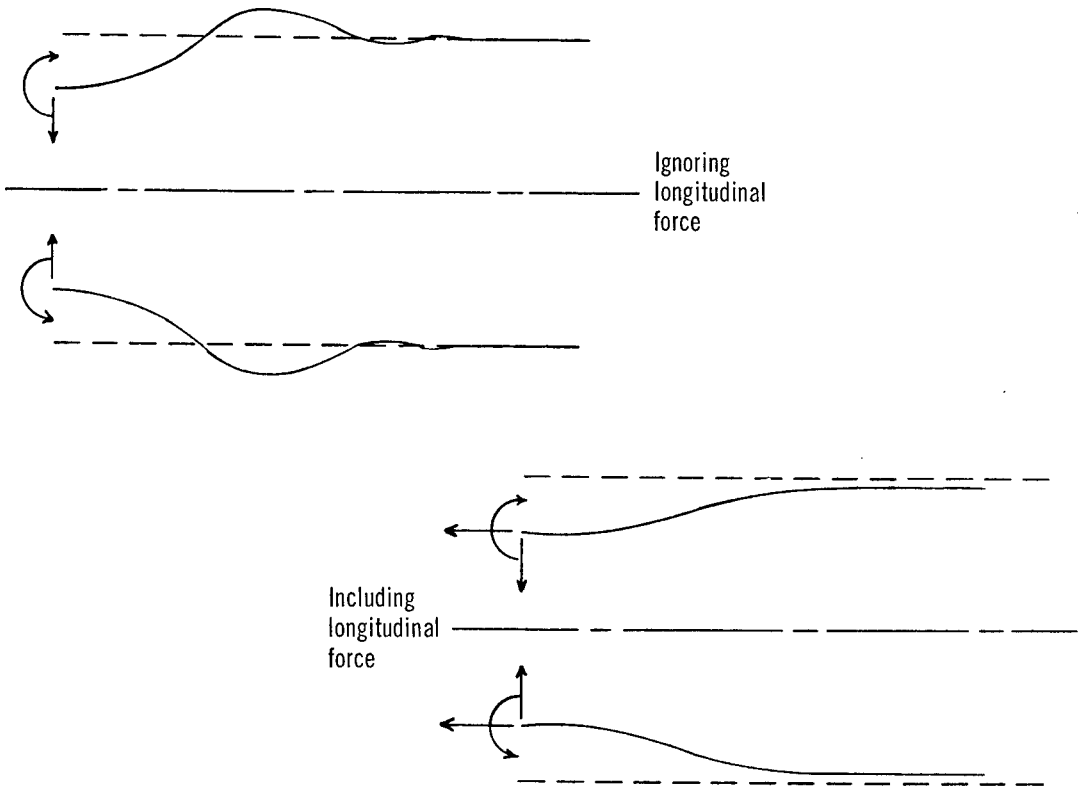

Figure 7.–Effect of longitudinal load on deflection.

2.3.6.2 Local Attachments and Openings

Axisymmetric openings and attachments in the pressure vessel are usually analyzed in the axisymmetric computer programs by considering the opening flanges or attachment reinforcements to be rings or short, thick cylinders. In designs involving nonaxisymmetric openings or attachments (e.g., multiple nozzle ports in an elliptical closure, or TVC attachments), the usual approach is to design a uniform reinforcement for the maximum loads that would exist on an equivalent, symmetrically loaded structure. Bijlaard's work (refs. 85 and 86) on local stresses in spheres and cylinders is frequently used to calculate the stresses in pressure vessels adjacent to reinforcing pads; however, this work is not directly applicable to the stresses in the pad itself. Also, early NACA work (ref. 87), is frequently used in the analysis of external load applied to a shell-supported ring. A finite-element computer program (ref. 88) has been developed that will facilitate the analysis of the reinforcing pads, nonaxisymmetric openings, and the shell-supported rings discussed above when reinforcement thicknesses do not exceed approximately four times the shell thickness.

The choice of the method used to analyze fittings depends on whether an approximate or an exact analysis is required. Methods for accomplishing either type analysis are discussed here in terms of integral attachment fittings (fig. 8). The attachment shown in figure 8 is typical of the type used on small auxiliary motors, but the analysis is similar for attachments on any size motor case.

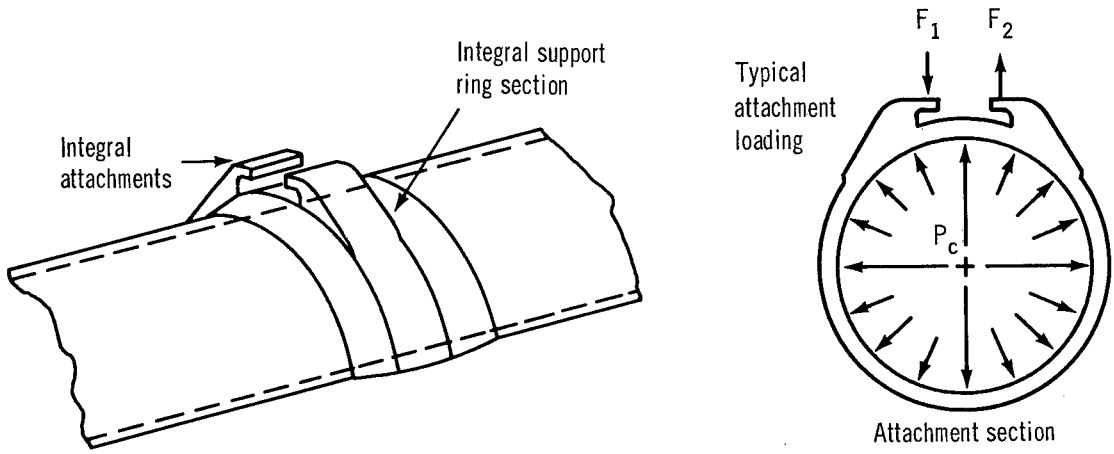

Figure 8.–Attachment fitting fabricated as integral part of motor.

Approximate analysis.–The NACA TN 929 ring analysis method (ref. 87) accounts for shear flows and bending at the junction of the ring and an adjoining thin wall cylindrical section. Most workers in the field have programed this analysis for computer solution. A typical program is given in reference 89. The NACA TN 929 method provides a precise solution to the integral attachment problem; but it does not precisely account for the stiffness of the "hook" region as it affects the ring stress pattern. The method of simulating "hook" stiffness and the load going into the ring is illustrated in figure 9.

The load vectors and angular locations (fig. 9), the internal pressure, and data describing the ring width and section geometry are put into the computer program. The program calculates and prints inner and outer hook stress, radial deflection, rotation, moment stress, normal stress, shear stress, and shear flow for any desired angular spacing around the ring.

The accuracy obtained using this method of analysis in a specific application is a function of the particular computer program selected, the number of elements analyzed, and the accuracy of the input data. The results of a theoretical analysis performed as described above (ref. 89), with a complete experimental verification by photoelastic and strain-gage testing (ref. 90), is shown in figure 10.

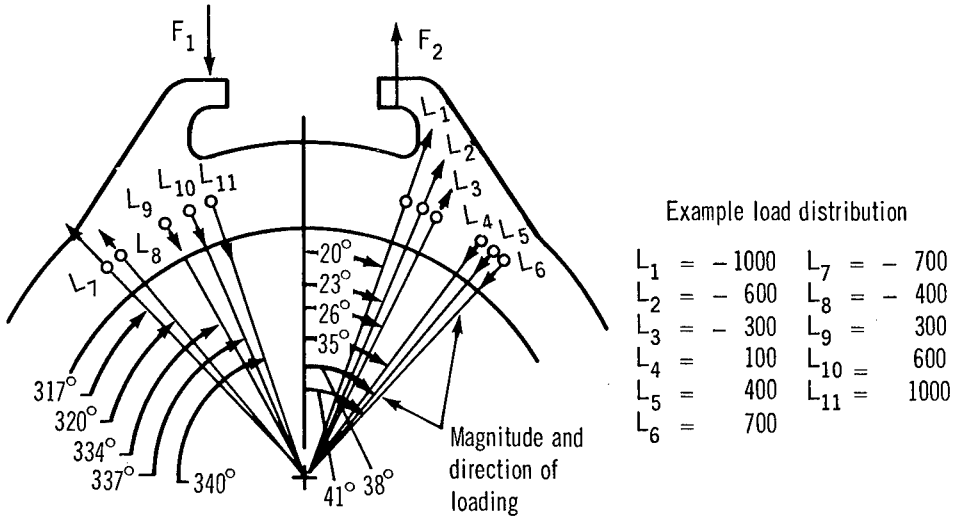

Figure 9.–Simulated hook stiffness.

Precise analysis.–A precise analysis of the case attachment problem is one that accounts for the total geometry of the structure; e.g., attachment section as well as ring section. The most thorough analysis technique applicable to this problem is the plane-strain, finite-element analysis. Most propulsion contractors have developed or acquired plane-strain, finite-element computer programs based on the work reported in reference 91. Generally, these programs are modified for particular needs, as typified by the work in reference 92.

An example of a finite element grid for an analysis of an attachment and ring section is illustrated in figure 11.

The geometry is described for the computer by providing an input for each of the grid intersection points shown on the model. Only the applied loads (F_1 and F_2 in the example) and the internal pressure are put into the data in addition to input describing geometry and material. If the internal grain configuration is considered significant in lending support, the grain geometry can be added to the analysis model (ref. 92). With this analysis technique, the attachment fitting and shell structure can be analyzed in precise detail, limited only by the capacity of the computer program.

The plane-strain programs calculate and print out maximum, minimum, and orthogonal stresses and strains, direction of principal stress, maximum shear stresses and strains, and deflections. If the analyst creates small elements in the fillet regions, the computed stresses are accurate and require no empirical adjustment. The primary disadvantages of a precise analysis are the time and cost required for setting up and running the computer program.

Other common types of case attachments such as those shown in figures 5 and 12 can be analyzed by these methods.

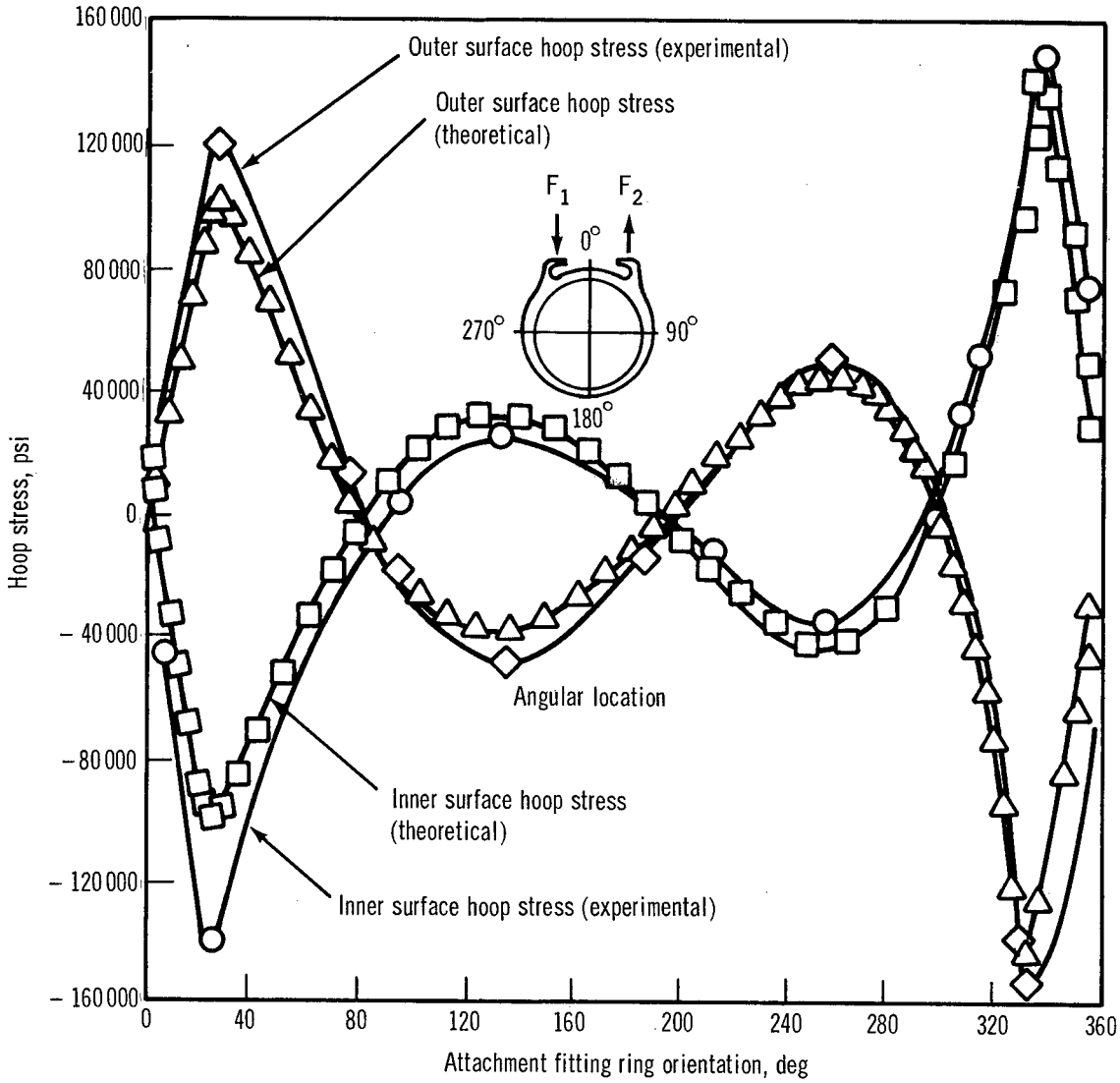

Figure 10.–Attachment fitting ring stress plots.

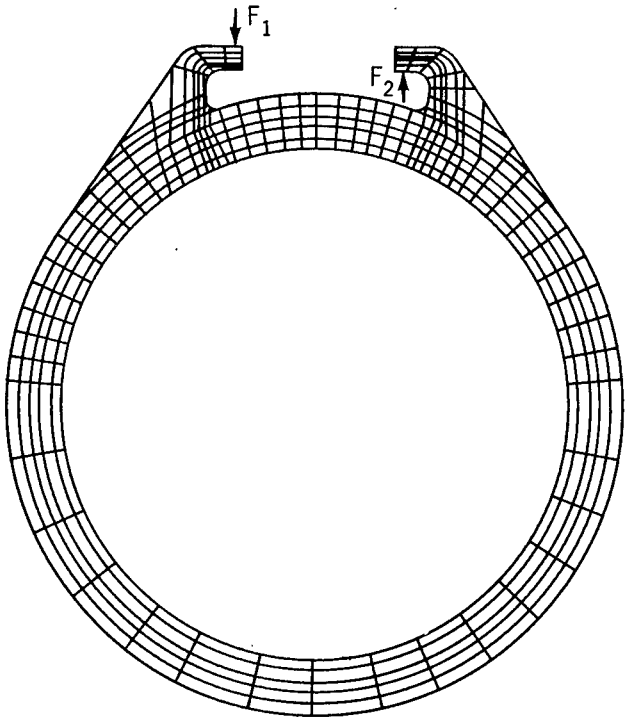

Figure 11.–Model for attachment and ring selection analysis.

2.3.6.3 Local Weld Discontinuities

Considerable differences exist in the analysis and treatment of stresses at or near a case weld. The weld stress state may include residual stresses and bending stresses that occur because of radial mismatch and angular mismatch (weld-sink discontinuity at a weld). The analysis techniques used include specifying a reduced strength allowable at the weld (ref. 93), full elastic analysis of the discontinuity stress state (ref. 94), plastic analysis of the stress state, and evaluation of the stress state in the presence of a preexisting flaw (ref. 95).

The use of a reduced allowable stress at the weld has tended to ignore the finite value of the discontinuity stresses at the weld. This practice has been considered justified by using the reduced allowable strength, which is usually based on a series of flat-plate tensile specimens tested with intentional maximum mismatch. This and other approaches mentioned have been used successfully in the past.

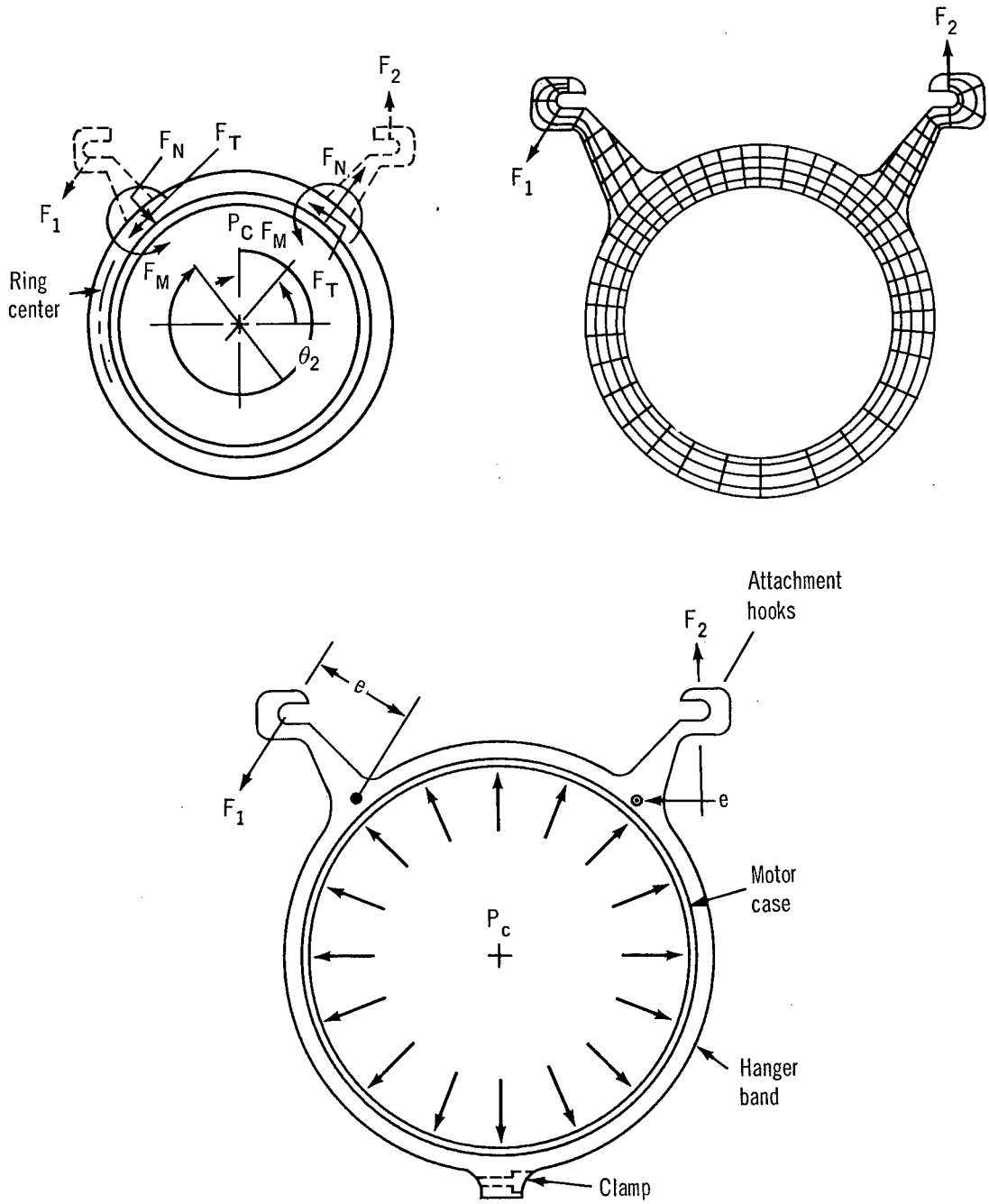

Figure 12.–Fully circumferential attachment. Upper left: model for approximate analysis. Upper right: model for precise analysis.

2.3.6.4 Buckling of Thin-Wall Shells

Buckling loads that may act on a motor case include axial compression, longitudinal shear at the case-propellant interface, longitudinal bending, torque varying linearly along the axis, external pressure, localized loads, such as may occur in ground handling along a circumferential or axial band or at a localized spot, thermal gradients, or combinations of these loads.

The methods and techniques used to conduct buckling analysis are covered in references 65 and 96 and 102. However, the stability of thin-wall shells has been and continues to be extensively evaluated both analytically and experimentally. The critical allowable buckling loads predicted by theory can be an overestimate or underestimate of the actual loads that can be sustained, depending on the method of analysis used, the reliability factors associated with data scatter, and assumptions of hardware imperfections that are applied to the analysis. The primary impetus for a continued evaluation of stability-analysis techniques comes from the discrepancies that often exist between the predicted loads and the actual buckling loads obtained in experimental investigations (ref. 24, p. 85).

For conservatism, most motor case stability analyses are accomplished without considering the beneficial effect of the propellant grain stiffness. Several methods of stability analysis, including torsion of circular cylindrical shells with an elastic core, are discussed in references 103 to 105.

2.3.7 Structural Dynamics

C. W. Coale (ref. 106) has presented an informative summary of the state of the art in structural dynamics, and its interrelation with the computer. Another extensive survey of dynamic analysis involving closed-form solutions has been completed by Baltrukonis (ref. 107). The finite-element methods of analysis (refs. 108 to 110), although less rigorous, do provide engineering solutions to the dynamic problems of solid motors.

Considerable attention has been given in recent years to the dynamic analysis of clustered structures. At the present time, the analyst has a choice of several methods (refs. 111 to 114) that include matrix techniques or continuous-mechanics methods.

2.3.7.1 Bending Frequency

Generally, the most significant dynamic characteristic in case design is the proper control of the body bending frequencies. Bending frequencies influence the aeroelastic behavior of the system, the dynamic loads resulting from wind gust and steady-wind shear, and the

interaction of the body bending with the guidance and control system (refs. 115 and 116). The importance of bending frequency depends on the location of the particular stage in the vehicle, and is most often critical in the center stage.

2.3.7.2 External Dynamic Environment

Flight dynamic bending moments resulting from steady-wind shear, gusts, and buffeting (ref. 117) are influenced by vehicle configuration (e.g., L/D ratio), payload geometry, control system, and the vehicle flight profile and operating parameters. Transient dynamic loads are usually analyzed to determine whether the loads are more or less than the quasi-static loads determined by rigid-body analysis of gust transients and steady-wind shear, and whether the dynamic behavior of the vehicle acts as a gust-load alleviator.

External loading conditions that may induce dynamic response in a single motor consist of the acoustical field generated by the rocket motor, aerodynamic or boundary-layer noise, and loads encountered during transportation and handling. Acoustical and boundary-layer noise usually are not critical in determining case thickness, particularly when considering the damping provided by the solid propellant.

Motor skirts affixed to either the forward or aft end of the case, or both, may interact with the interstage structure and are more susceptible than is the pressurized case to buckling under external pressure, thrust loading, and boundary-layer noise. When equipment or components are attached to the skirt, excitation of the skirt by acoustic noise or by turbulent-boundary-layer noise may result in severe vibration of the components and in high loads on the skirt-to-component attachment (refs. 118 and 119).

The dynamic behavior of clustered motors is influenced by the pressure-vessel stiffness, not only in the overall vehicle dynamic behavior, but also in dynamic interaction between the motors. With clustered motors, additional dynamic loading can be generated because of nonsimultaneous motor ignition and burnout, TVC inputs, and aeroelastic conditions.

2.3.7.3 Internal Dynamic Environment

Internal or self-generated dynamic environments may occur from ignition shock (ref. 107); ignition transient, oscillatory burning or combustion instability; and thrust termination. The ignition shock and ignition transient of current motor designs are usually an order of magnitude less than the structural dynamic response modes of the motor, and thus result in a noncritical quasi-static loading condition. Oscillatory burning usually produces undesirable performance changes or severe vibration environments in the vehicle or motor components before affecting the pressure vessel.

2.4 Case Fabrication

The advantages and disadvantages of fabrication techniques likely to be used to fabricate solid rocket motor cases for space propulsion (i.e., roll and weld, cupping and drawing, shear spinning, ausforming, ausshear forming, explosive forming, and cryogenic stretch forming) are sufficiently covered in reference 24, pp. 153-157, and in reference 120, that further discussion is not warranted. Ring-rolled, forged, and machined cylindrical sections (not covered in the above references) offer the advantages of eliminating the longitudinal weld and providing girth-weld reinforcements (if required). The disadvantages of this technique are uneconomical material use and cylinder-length limitations (as compared to shear spinning).

The use of new materials is sometimes preceded by evaluations to obtain detailed knowledge of the effect fabrication processes will have on the material and the motor case end product. For example, an extensive program was initiated prior to fabrication of a large solid rocket motor (ref. 60) to evaluate the material properties and fabrication process characteristics of the 200-grade 18 percent nickel steel.

The continuing development of higher strength steel has required the continued development of welding technology to obtain equally strong and tough welds with minimum defect characteristics (ref. 121). The welding of titanium and other fabrication processes such as forging, extrusion, forming, and machining was discussed in a symposium on titanium (ref. 36).

2.5 Testing and Inspection

2.5.1 Destructive Testing

In motor case development programs, destructive testing is used in many phases of case design; material evaluation; and fabrication- and inspection-process evaluation to establish design requirements, to evaluate alternative approaches, and to verify end results. When case designs, structural materials, and fabrication and inspection processes are substantiated by considerable past experience, destructive testing is usually limited to the degree necessary to certify the design, materials, and processes.

Examples of the types of information determined by specimen or pressure-vessel destructive testing that are usually considered for applicability in each motor case program are as follows:

(1) Parent and weld material evaluation

(a) Mechanical, fracture-toughness, and physical properties of the materials
(b) Heat-treatment response of the materials

(c) Influence of chemistry variation on the mechanical, fracture-toughness, and physical properties of the materials
(d) Metallurgical characteristics of the materials
(e) Influence of applicable environments on the mechanical, fracture-toughness, and physical properties of the materials
(f) Influence of mill-processing variables on mechanical and fracture-toughness properties of the materials

(2) Case design

(a) Case attachment ultimate load and pressure-sealing capability
(b) Weld-mismatch or other discontinuity stress distribution
(c) Case biaxial strength
(d) Overall case compliance with design requirements

(3) Process evaluation

(a) Influence of weld-process variables on the mechanical and fracture-toughness properties of the weld metal and weld heat-affected zones
(b) Effects of forming, forging, spinning, and other material-deformation processes on the mechanical and fracture-toughness properties of the parent and weld metal
(c) Compatibility between structural defects expected or encountered versus the detection sensitivity of the nondestructive-inspection systems
(d) Influence of heat-treatment environment on the mechanical and fracture-toughness properties of the material

The sizes and shapes of destructive-test specimens are virtually limitless and the specific requirements depend on the particular program needs. The types of destructive tests most frequently used in current motor case programs include pressure-vessel hydro-burst testing (either subscale or full-scale), uniaxial and biaxial specimen mechanical-property testing, and metallographic and composition analyses. Test-specimen design and test procedures for many of the usual test conditions are available in references 28, 29, and 122.

2.5.2 Nondestructive Testing

2.5.2.1 Inspection Plan

In each new motor program, there are normally two methods for controlling motor case reliability. One method is to accumulate and analyze data on failures that occur during hydrostatic proof tests and motor static and service firings, then modify the design according to the results of the failure analysis. The other approach, used in combination with the method above, is to employ a detailed and comprehensive program of material and fabrication-process control throughout material procurement and fabrication. This program

permits detection of potential causes of failure and the timely repair and correction of these areas. Proper inspection processes are key factors in the success of this approach.

Some pertinent thoughts on the development of a successful inspection plan, or nondestructive testing (NDT) plan, as it is sometimes called, are outlined in six steps in reference 123. Briefly, these six steps are as follows:

(1) Determine the types of defects that require detection
(2) Evaluate existing inspection (NDT) techniques for sufficient sensitivity and accuracy or develop new acceptable or adequate technique
(3) Verify that the inspection techniques obtain a valid indication or description of the actual defects
(4) Establish accept-reject standards for each type of defect and each inspection technique
(5) Establish an inspection plan
(6) Eliminate any redundant inspection as knowledge and experience are gained during case development and production

Additional guidelines in the development of a motor case NDT plan are given in reference 32, pp. 98-104.

2.5.2.2 Inspection Processes

Reference 124 presents the basic principles of inspection (nondestructive testing), expected results, and typical applications.

Current practice shows that radiographic, ultrasonic, magnetic-particle, and dye-penetrant inspections are commonly used in various degrees, depending on program requirements and the effect of a case failure on cost and schedule. The advantages and disadvantages of these inspection techniques (refs. 95 and 125) are summarized in the following paragraphs.

Radiographic.—Radiographic inspection has been used extensively in the past and is the most definitive inspection technique. Visual presentation of the flaw size and shape is obtained on a permanent record. Limitations exist in determining the actual depth of the defect and in detecting tight, cracklike defects adversely oriented (plane of minimum density-change perpendicular to the X-ray).

Ultrasonic.—Ultrasonic inspection is the most sensitive method of detecting thin, cracklike subsurface defects. The shear-wave method is sensitive to defects perpendicular and nearly perpendicular to the surface, and the longitudinal method is sensitive to defects parallel and nearly parallel to the surface. Limitations of the inspection process exist in areas of rapid dimensional change, where irregularities in the defect surface or its attitude with respect to the sound waves may decrease or mask the indication, and in the inadvertent failure of the operator to observe the defect indications. Also, limitations sometimes exist in the

interpretation of indications for use with accept-reject criteria in the inspection of welds, particularly of welds with weld crowns.

Magnetic Particle.—The magnetic-particle inspection process is useful for inspection of the surface and near-surface. The wet inspection process is the most sensitive; however, the dry process is sometimes used when the inspection of heated parts is required (e.g., weld with preheating maintained). The inspection process is not useful on nonmagnetic materials including areas of retained austenite (generally associated with areas of multiple weld repair) in the nickel maraging steels. Also, magnetic leakage can occur at areas of sharp contour change.

Dye Penetrant.—Dye-penetrant inspection is a very rapid process for surface inspection and is particularly useful with nonmagnetic materials and for spot-check inspections. Limitations exist in the interpretation of small indications.

All of the above inspection methods are sensitive to surface finish and treatment, and to the skill and alertness of the operators (ref. 32, pp. 95-104).

Results of a cooperative nondestructive testing (inspection) program to evaluate NDT sensitivity are given in reference 95. Test plates 0.7 in. thick were prepared with fatigue cracks. After cracking, the faces of the plates were ground to remove any trace of the crack starter notches. The plates were then inspected using the ultrasonic and radiographic inspection techniques of two case fabricators, two Navy laboratories, and the NASA/Lewis Research Center. The study showed that—

(1) Radiographic inspection consistently failed to detect flaws 0.063 in. deep by 0.155 in. long and smaller;
(2) The largest flaw, 0.105 in. deep by 0.309 in. long, was not consistently detected by radiography; and
(3) Using ultrasonic inspection procedures with normal production sensitivity, flaws 0.063 in. deep by 0.155 in. long and smaller were not consistently detected.

2.5.2.3 Hydrostatic Proof Test

Hydrostatic proof tests of one or more cycles are accomplished to demonstrate operational structural integrity of the rocket motor case.

The significance of the proof test is adequately discussed in reference 126. The proof-test concept is based on the premise that the motor case that is proof tested at a pressure higher than the motor operating pressure cannot have any detrimentally oriented flaws greater than the critical flaw size at the proof-stress level. This concept is discussed in detail in references 28, 30, 61, 126, and 127.

3. DESIGN CRITERIA AND RECOMMENDED PRACTICES

3.1 Case Configuration

3.1.1 Design Optimization

The motor case design shall be based on case, motor, vehicle, and mission design parameters that result in either maximum performance or maximum cost effectiveness, depending on specific needs and characteristics of the program.

The basic motor- and vehicle-dependent case-design parameters (case internal pressure, motor case inertia and flight loads, maximum case weight limit, length-to-diameter ratio, and internal- and external-envelope constraints) should form the basis for the initial case design. Whenever possible, the case design parameters should be provided as explicit design points to the case designer. Otherwise, these interdependent design points must be established on the basis of optimization analyses. When optimization is required, the following procedure is recommended for establishing the optimum case design (i.e., the least expensive one that satisfies all mission objectives while not violating any imposed constraints).

Step 1.–Prepare a preliminary layout drawing of a motor of approximately the size anticipated for use in the vehicle. This motor drawing should call for state-of-the-art materials and should embody the design philosophy expected for the operational system. Weight, length, and volume information obtained from the layout drawing should be used together with performance data to adjust the equation coefficients used in the vehicle-analysis computer programs.

Parametric weight-scaling equations for homogenous cases (refs. 21 and 22) have sufficient accuracy to be used for determining the weight of the initial design used in the optimization process. A method of calculating the weight penalty for segmented-case design based on the pin-and-clevis segment joint is available in reference 22 (eq. (28), p. 22). Coefficients used in the weight-scaling equations should be determined on the basis of the initial case design layout. Also, an analysis should be made (ref. 21) to determine whether the design is buckling critical, and the case weight should be adjusted accordingly.

Step 2.—Vary the independent design parameters and material strength level (sec. 3.2.1), respectively, and determine their influence on the case design and motor performance (and cost, if considered). Continue to perform tradeoff and optimization analyses (ref. 20) to select the near-optimum values of the independent parameters for use in the final design.

Step 3.—Make new layout drawings based on the near-optimum values of the operating parameters and check to insure that computer-predicted weights, lengths, and performance estimates are valid. To insure the validity of the design, perform necessary calculations external to the generalized computer program (e.g., structural analysis (sec. 3.3.6), detailed weight calculations, and grain design).

Steps 2 and 3 should be repeated as necessary. The pressure-vessel design characteristics resulting from this procedure should be consistent with the required motor characteristics, and with near-optimum system performance when all stages are considered.

The independent design parameters considered in sections 3.1.2 and 3.1.3, material-strength properties (sec. 3.2.1), and other important parameters, including internal pressure, motor-thrust load, flight loads, and loads resulting from the particular motor or vehicle configuration (sec. 3.3.5) should be included in the optimization analysis to the extent required by the particular application.

Specific recommended practices for component cost analysis cannot be made because of the many complexities involved. Cost-estimating techniques presented in reference 5, chapter X, should be used as a guide.

The general recommendation for cost analysis is to establish the case design and then to continue to improve the design with cost effectiveness as the criterion, using tradeoff studies similar to those discussed in section 3.4.1. The trajectory performance of the vehicle should be maintained constant for each design alternative evaluated. The analysis should include the cost of all motor components, redesigned as required to maintain constant vehicle performance.

As an example, a reduced-cost case material with lower strength level requires a heavier case for the same operating pressure to maintain constant trajectory performance. The increase in motor case inert weight requires additional propellant weight. The added propellant weight results in a longer case to contain the added propellant, increased insulation weight, larger nozzle, larger igniter, and increased TVC-system capacity. The increase in motor-component costs should then be evaluated against the total cost savings of the alternative case material.

3.1.2 External Envelope

3.1.2.1 Envelope Volume

The case external envelope shall be the minimum size that provides the required internal volume.

The motor case external envelope should be designed so that the outside diameter minus the required structural thickness produces the minimum required internal volume. The internal volume consumed at areas of local case-attachment thickness reinforcement (nozzle, igniter, thrust termination, thrust reversal, case-segment joints, clustering structure, and any other equipment or structure) should be accounted for when establishing the case external envelope.

3.1.2.2 Size and Complexity Constraints

The case external envelope shall be of the smallest size and least complexity that will satisfy the following when specified as a fixed position constraint:

(1) Integration with the other motors, equipment, and payload in a vehicle or clustered stage

(2) Use of existing fabrication, handling, transportation, and launch facilities

An initial case-envelope drawing should be prepared to show the case configuration, the minimum-maximum dimensions, the requirements for external connections, and all other external case characteristics that stem from requirements for interface of the case with other components. Sufficient detail should be included in this drawing to insure that the necessary design details can be developed.

When the overall requirements for integration of the case with other existing vehicles, components, and facilities have been defined, the case external envelope, including length, diameter, end-closure profile, local-attachment provisions, and any other specific contour requirements, should be designed in accordance with the requirements specified on the envelope drawing.

3.1.2.3 End Closure

The case end closure shall be the minimum size and optimum shape required to satisfy the following when specified as fixed design constraints:

(1) Propellant grain design

(2) Clearances for auxiliary equipment in the motor skirt and interstage region

When a fixed grain design is specified, the motor case end-closure external profile must be established as the minimum size that will conform to the specified contour of the grain and the thermal insulation, while possessing the required end-closure structural thickness. Also, when auxiliary equipment must be installed at a fixed vehicle station in the skirt or interstage region of the motor, the case external closure profile must be established to assure that clearance exists between the auxiliary equipment and the end closure at the maximum deflection of the closure under case internal pressure and the maximum deflection (or travel) of the auxiliary equipment. When propellant grain design or auxiliary-equipment mounting constraints are not specified, the end-closure profile should be selected in accordance with the specific needs defined in section 3.3.3.

3.1.2.4 Length-to-Diameter Ratio

The case length-to-diameter ratio shall result in maximum vehicle performance or in maximum cost effectiveness as determined by tradeoff optimization among minimum inert weight, minimum vehicle drag loss, and case buckling stability and stiffness requirements.

When external-envelope constraints are not specified in the motor-design procurement specification, the case length-to-diameter ratio should be established using the optimization-analysis program. A cylinder length-to-diameter ratio should be selected that will result in minimum total motor inert weight when considering the weight of the case, motor insulation, and interstage structure. In addition, the case length-to-diameter ratio should be established in the optimization analysis as a tradeoff among drag loss, case compressive drag loads and atmospheric lift, and motor flight-control loads (sec. 3.3.5.3) at the worst combination of dynamic pressure and angle of attack versus the case buckling stability (sec. 3.3.6.4) and stiffness requirements (sec. 3.3.7).

3.1.3 Propellant Mass Fraction

The case weight shall result in a propellant mass fraction specified by optimization analysis, considering individual program constraints.

The near-optimum performance or cost-effectiveness characteristics of the motor should be established by optimization analysis. Then, other considerations should be made to minimize case weight, and hence increase vehicle performance. The following case design recommendations should be evaluated during case and vehicle optimization to obtain the minimum case weight. It should be recognized that each of the following considerations is subject to a tradeoff of vehicle performance versus cost effectiveness and each is subject to additional design constraints discussed in various sections of this monograph. The minimum case-weight design alternatives include the following:

(1) Using high-strength structural materials
(2) Using the minimum design safety factor and margin of safety consistent with the case design requirements
(3) Eliminating cylindrical section longitudinal welds to minimize cylindrical wall thickness
(4) Eliminating or minimizing case stress concentrations and areas of load discontinuity
(5) Using the minimum-weight end-closure profile
(6) Using unitized case construction, in preference to segmented construction, where possible within specified program requirements
(7) Minimizing the size and quantity of case attachments, within specified program requirements
(8) Using internal and external insulation to increase the structural material allowable strength when subject to thermal exposure

3.2 Material Selection

3.2.1 Case Loading

3.2.1.1 Critical-Temperature Loading

The minimum mechanical properties of the case material shall not be less than needed for structural loading at the critical operating temperature, as imposed by fracture-mechanics theory and design safety factors.

The important mechanical properties to consider in the material to be used are tensile strength, shear and bearing strength, compressive strength, creep characteristics, fatigue strength (sec. 3.2.3), and modulus of elasticity. The material should be selected on the basis that the minimum values for these mechanical properties at the critical operating temperature and loading are not less than those required to withstand the maximum case structural loading (sec. 3.3.5) as evaluated by appropriate structural analysis (sec. 3.3.6). In addition, the material should be evaluated by fracture mechanics (sec. 3.2.2.1) to determine the allowable value for working stress that can be used in the design with that material.

The specific material mechanical properties should be established from existing data that are representative for the selected material, or these properties should be established by evaluation of specimen tests or burst tests of either full-scale or subscale pressure vessels (sec. 3.5).

If several materials possess acceptable strength and reliability, the selection should be based on the results of cost-effectiveness studies.

3.2.1.2 Weight Limit

The material strength-to-density ratio shall result in a case within the weight limit defined by the required propellant mass fraction for the motor.

The material properties that should be evaluated in the initial selection of the material strength-to-density ratio are dependent on case internal-pressure load and the case buckling and bending loads (i.e., the tensile properties of the material are significant in pressure-critical designs, and the modulus of elasticity is significant in buckling- or stiffness-critical designs). The initial selection should be accomplished by evaluating the case cylindrical-section weight as a function of cylindrical volume enclosed. Equations based on the weight per unit of enclosed volume of the case cylinder section (ref. 24, eqs. (23), (24), and (25), pp. 167-168) should be used for rapid determination of the material strength-to-density ratio required for pressure- or buckling-critical design conditions. In equations (23) and (24), the highest weight per enclosed volume defines the critical loading condition. The final selection of the case material must be made on the basis that the material simultaneously satisfies two conditions: the case designed using the material meets all structural loading requirements and the total weight of such a case is within the mass-fraction requirements.

3.2.2 Mode of Failure

3.2.2.1 Brittle Failure

Case materials shall not experience brittle failure at a case loading less than the design load.

The selection of high-strength material should be based on application of fracture-mechanics theory in conjunction with material strength level. For almost all commonly considered high-strength materials, there is a critical size defect associated with the particular

application of the specific material (the critical defect may be a surface defect or a subsurface defect) that, if exceeded, results in failure of the case at an applied-stress level less than the normal yield strength of the material. Therefore, if a particular material is to be used under fabrication conditions that will produce defects that the inspection methods cannot readily detect, and these defects are of the critical size or larger, then the case design, or the inspection method, or the fabrication process should be modified. The alternatives are as follows:

(1) To revise case design to reduce the applied stress to a level that will result in a critical defect size that can be readily detected using the intended production inspection methods
(2) To change the inspection techniques to methods with increased sensitivity that will readily detect critical-size defects
(3) To change to fabrication methods that will result in an increase in fracture-toughness properties with an attendant increase in the critical defect to a size that can be detected with the inspection method being used.

Many references on the subject of fracture mechanics are available. Brief and useful information on the application of fracture mechanics in case design and on the determination of fracture-mechanics properties may be obtained in references 25, 26, and 27; more complete and detailed information may be found in references 28, 29, and 30.

In case designs that involve the use of high-strength structural materials, the design engineeer should evaluate the case allowable stress versus an estimate of the defect size that could escape detection and the plane-strain fracture toughness of the material. The materials engineer should evaluate the minimum toughness required versus the design stress and the maximum-size defect that could escape detection. Finally, the quality-control engineer should establish the nondestructive testing of the component that will give assurance that all defects larger than the specified size will be detected.

It must be recognized, in the application of fracture mechanics to the case design, that while the surface flaws are in most situations the critical flaws, internal defects and multiple arrays of defects also must be evaluated (ref. 28, pp. 357-372). In addition, the effect of flaw growth during either sustained or cyclic load and in adverse environments must be included in determining an allowable maximum initial flaw size. The flaw-growth evaluation must include the stress-time cycles associated with the hydrostatic proof test (sec. 3.5.2) and all service cycles. These factors must be included in the actual design. The fracture toughness must be known for the specific chemistry, mill practice, and heat treatment where the critical crack size is to be calculated. Also, the possible degradation of the fracture toughness of the case parent metal, weld metal, and heat-affected zones because of low-temperature exposure, work hardening during forming operations, weld repair, or any other condition that influences fracture toughness, must be included in the design analysis.

3.2.2.1.1 Initial Defect Size

The initial defect size allowable in the case design (as defined below) shall be at least as large as the minimum-size defect that can be detected by the inspection process.

By use of fracture-mchanics analysis, all defects that can exist in the case parent metal and weld metal should be identified, and maximum allowable sizes should be established for each type of defect and combination of defects. In general, the allowable defect size increases as a function of the square of the material toughness and decreases as a function of the square of the applied stress. Therefore, the allowable size of each type and combination of surface and internal defects should be established for the minimum fracture toughness and maximum stress level that can exist in every element of the case (i.e., parent metal, longitudinal-weld metal, girth-weld metal, and weld heat-affected zone).

The critical size allowed for each type of defect should be determined on the basis of the actual properties (minimum fracture toughness and maximum applied stress cycles) that will exist in the actual case, using production material and production fabrication processes. In addition, the critical size for each type of defect should be larger than the minimum size of each type of defect that can be detected with the specific types of nondestructive-testing techniques to be used in the program (sec. 3.5.1).

3.2.2.2 Ductile Failure

Case materials shall not experience ductile failure at a case loading less than the design load.

The selection of material subject to ductile failure should be based on existing data that are representative of the actual materials used, including all influences of material-production and case-fabrication processes (sec. 3.2.1.1 and 3.2.4). When adequate data are not available, the actual mechanical properties of the material as it will be used in the specific design application should be determined by specimen tests or by pressure-vessel burst test.

When biaxial strength properties are used as the basis for establishing material allowables, it is recommended that the actual biaxial properties be known, or that burst tests or specimen tests be designed to simulate actual loading conditions as required to define the biaxial properties (ref. 31). The actual biaxial strength depends on the material, case configuration (length-to-diameter ratio and end-closure profile), and the actual state of multiaxial stress. A biaxial stress ratio of 1:2 will not, under most conditions, represent the actual stress state in the flight motor subject to both internal pressure and external loads (ref. 24, p. 124).

3.2.3 Fatigue

The case material shall withstand both low- and high-cycle fatigue induced either by the predicted thermal cycling, by the predicted pressure cycling, or by the worst combination thereof.

The selection of material for motor cases in which the material will be subjected to either thermal- or pressure-induced low-cycle or high-cycle fatigue, including dynamic creep (ref. 51, pp. 75-78), should be based on the knowledge that the material has fatigue properties acceptable for use in the intended application. The fatigue strength is defined as the maximum stress that can be sustained without failure for the specified number of pressure-time cycles while the material is subjected to the critical thermal or corrosion environments.

If the required data on fatigue strength are not available for the specific material, representative test specimens should be evaluated by performing appropriate fatigue tests to qualify the material for use. It must be emphasized that the fatigue-property data should be obtained while the material is subjected to the most adverse conditions expected to be encountered by the particular case (sec. 3.5). Also, when thermal fatigue (including thermal stress) is a design factor, the thermal conductivity, thermal diffusivity and thermal expansion coefficient (ref. 24, pp. 140 and 141), specific heat, and surface emissivity and absorptivity properties should be evaluated for each material considered. The material selected should have the best combination of properties that results in the smallest thermal stress and highest mechanical properties for the particular application and thermal environment.

3.2.4 Fabrication Considerations

Case-material mechanical and physical properties shall be within established design limits after exposure to the intended fabrication processes. The machining, forming, welding, dimensional stability, and through-thickness hardening characteristics of the material shall be compatible with the fabrication processes to be encountered.

The material should be selected on the basis of available data adequate to establish that the material mechanical and physical properties will be within acceptable limits required for the particular design after exposure to all of the production fabrication processes to be encountered. Also, the material should have other characteristics suitable for the particular design and for the processes to be used during fabrication. These characteristics include machinability at the required material strength level, formability at the required material strength level, weldability in either the non-heat-treated or heat-treated condition as required, dimensional stability during thermal treatments, and through-hardening capability in the required section thickness.

Recommended practices for selection of fabrication process and for the evaluation of the effects of the fabrication processes on the material and the end product are given in section 3.4. These practices should be used whenever the effect of any proposed fabrication process is unknown or uncertain.

3.2.5 Case-Configuration Considerations

3.2.5.1 Heat-Treatment Requirements

The material heat-treatment process requirements shall be suitable for the case size and shape.

In applications where the case or case-segment length or diameter exceed the size limitations of existing heat-treatment facilities, the material should be selected from the nickel maraging steels, which require only relatively simple aging treatments, or from the 9 nickel-4 cobalt and Ni-Cr-Mo-V steels that have the potential for reliable fabrication in the heat-treated condition (sec. 2.2.7).

Where the case or case-segment length and diameter are within the existing heat-treatment-facility size limitations, the material should be one of the three types of steels listed above, or any equally suitable alloy that will satisfy weight, reliability, and cost-effectiveness requirements for the specific application.

3.2.5.2 Material Sizes and Properties

The basic material production process shall produce material lot sizes that result in a minimum number of case welds. The process shall produce material properties within design requirements for the particular case application.

The sheet, plate, forging, spun, or formed component size available from the material production heat should be established on a case layout drawing to show the number and location of subassemblies and welds required to fabricate the case. Within the additional factors discussed below, the material and material sheet or plate size should be selected to minimize the number of required welds and to permit locating the welds in low-stress areas of the case.

Material mechanical and physical properties and quality can vary with the heat size produced and with the melting practices used to produce the heat. In turn, the mechanical properties and quality of a weld can be influenced by the properties and quality of the parent material. When close control of material properties and quality is

required to maintain material and weld properties within established design requirements, small heats of material and the vacuum-arc remelting or electro-slag process should be used to produce the structural material.

A tradeoff study of material properties and quality, and of the number and location of case welds resulting from the heat size and material melting practice versus properties required and case configuration (case size and shape) should be done to select the compromise between heat size and melting practice that is optimum for the particular case configuration.

3.2.6 Environmental Considerations

The case material shall withstand any harmful environment encountered during fabrication, processing, storage, and service.

Initially, all possible environments and chemicals that may be encountered during case fabrication, processing, storage and service use should be reviewed to determine those conditions harmful to the case. Then, steps should be taken to eliminate exposure to these environments or to use chemicals that have minimum deleterious effect on the case. When deleterious environments cannot be eliminated, the case material and case design should be selected for inherent resistance to degradation in the harmful environment, or external methods of protection should be used, as discussed below.

3.2.6.1 Thermal Environment

The case material shall withstand the effects of short-term and long-term heating and cooling.

Heating rates, temperatures, and material mechanical-property changes caused by the thermal environment should be based on a critical 3-standard-deviation (3σ) design heating environment without an additional factor of safety (ref. 37).

Internal and external insulation should be used in the motor case design to limit the degradation of the case-material mechanical properties resulting from thermal exposure. (See sec. 2.2.6.1 for description of thermal environments.) The use of additional insulation to lower the maximum-temperature exposure of the case should be established on the basis of cost effectiveness versus performance tradeoff studies.

Areas of stress concentration in the case design should be minimized or eliminated when thermal stress and thermal fatigue are design factors. Also, joining of metals with dissimilar coefficients of thermal expansion should be avoided, where possible, to minimize thermal stresses.

3.2.6.2 Corrosive Environments

3.2.6.2.1 Moisture and Chemicals

The case material shall withstand the harmful effects of corrosion caused by moisture and chemicals.

The corrosive environments harmful to specific materials are too numerous to allow specific recommendations here on the methods of protection for all environments that could be encountered in any particular vehicle application. Protection of the case or case components from moisture and chemicals should be accomplished in accordance with references 41, 128, and 129. The materials recommended below are adequate, under most conditions, for protecting material susceptible to corrosion. However, to assure that the inhibitive and barrier materials provide the protection required for the specific structural material, environmental exposure, and length of exposure, the sufficiency of the protective materials should be known from available data or be established by corrosion tests (refs. 130-141).

(1) Fabrication and short-term storage
   (a) Light oil: MIL-H-6083; MIL-L-21260; MIL-L-7870
   (b) Soft film: MIL-C-16173, Grade 2
   (c) Barrier material: MIL-B-121; MIL-B-117

(2) Shipping
   (a) Hard film: MIL-C-16173, Grade 1; MIL-C-16555
   (b) Soft film: MIL-C-16173, Grade 2
   (c) Desiccant: MIL-D-3464

(3) Long-term storage and service
   (a) Interior surfaces: MIL-P-8585 chromate primer, two coats; MIL-P-23377 epoxy primer, one coat
   (b) Exterior surfaces: same protective measures as for interior surfaces, followed by TT-L-32 lacquer, two coats; MIL-C-27227 polyurethane, one coat

Titanium materials are not usually susceptible to moisture or chemical corrosion environments (sec. 3.2.6.2.3). However, in specific applications where the titanium material will encounter a deleterious environment, the protective coatings listed above or other materials that have been previously qualified to provide the protection required should be used.

Where some degradation must be tolerated, the degree of degradation allowed must not reduce the design safety factor (sec. 3.3.2) or the reliability to values below those specified. The allowable degradation by corrosion (e.g., stress concentration, reduction of thickness, surface roughness, or change in mechanical properties of the material) should be carefully evaluated by appropriate material evaluation, by structural analyses, and by component

tests. The component tests should include uniaxial or biaxial structural tests or full-scale or subscale pressure-vessel burst tests as necessary to define the allowable degradation. The test specimen should be tested before and after exposure to a corrosive environment designed to simulate the worst corrosive effect expected.

The case design should be established to minimize or eliminate rough weld crowns and geometric contours where moisture and other corrosive materials can become entrapped.

3.2.6.2.2 Galvanic Corrosion

The case material shall withstand the harmful effects of galvanic corrosion.

Where possible, the contact between dissimilar metals should be limited to metals within permissible couples established in reference 41. Reference 142 should be used to define dissimilar metals.

Where contact of dissimilar metals is unavoidable, protection against galvanic corrosion can be obtained for most applications by coating the surfaces of the dissimilar metals with a minimum of one coat of red oxide epoxy primer (ref. 143) or two coats of vinyl zinc chromate primer (ref. 144). Additional protection requirements for magnesium contact with dissimilar metals are given in references 41 and 129.

In instances where degradation by galvanic corrosion is unavoidable, the degradation must not reduce the reliability of the component below established levels or otherwise jeopardize the successful use of the component within its intended life expectancy. The degradation allowed should be established in accordance with the recommendations for moisture and chemical corrosion in section 3.2.6.2.1.

3.2.6.2.3 Stress Corrosion

The case material shall not experience deleterious effects of stress corrosion.

The phenomenon of stress-corrosion cracking is dependent on the particular material, environment encountered, membrane stress, and time. Therefore, particular caution should be exercised to determine unavoidable critical (or suspect) environments. Then, material-evaluation tests should be done to determine the stress-corrosion susceptibility (including the time-dependent factor) of the material in such environments while subjected to the maximum stress that will be experienced during exposure of the case in use.

Stress corrosion should be evaluated with fatigue precracked specimens maintained under constant load. However, when multiple pressure-time cycles are to be encountered by the

case while exposed to suspect environments, the stress-corrosion tests should be conducted with the test specimens subjected to a similar (preferably conservative) number of cycles under appropriate load.

Susceptibility to stress corrosion should be allowed only when the expected useful life of the case is significantly shorter than the time required for the corrosive effects to reduce the reliability below established values.

Halogenated compounds, including chloride salt (especially sodium chloride) and chlorinated hydrocarbon cleaning fluids, should be avoided with titanium when temperatures in excess of 500° F are expected to be encountered (ref. 36, pp. 35-43). Also, uninhibited N_2O_4 (innibited N_2O_4 contains 0.6+0.2 wt percent of NO, ref. 145) and methanol can cause stress corrosion in titanium at room temperature and should be avoided.

All steel, titanium, and aluminum alloys used in motor case fabrication should be considered subject to stress corrosion and, therefore, the stress-corrosion susceptibility of the material to the hydrostatic-test media should be either known or evaluated by tests. High-quality oil, appropriate solutions of water-soluble oil and water, and solutions of sodium dichromate and water are acceptable hydrotest fluids in most applications, but each should be qualified by test for use with a specific case material. The pH of a sodium dichromate and water solution should be adjusted to neutral or slightly basic by using an appropriate quantity of sodium hydroxide.

3.2.6.2.4 Hydrogen Embrittlement

The case material shall not be subject to any degree of hydrogen embrittlement.

Hydrogen embrittlement of steel intended for high-stress use is a serious problem, because there is no nondestructive test or inspection method known to reveal this condition; therefore, hydrogen embrittlement is intolerable in the motor case. Material processing (ref. 45) or exposure to any environment that can cause hydrogen embrittlement should be avoided in fabrication or use of the case. For this reason, plating of high-strength material should be avoided, or special care should be exercised to assure that after plating the component is adequately baked to eliminate the hydrogen-embrittlement hazard.

3.2.6.3 Space Environment

The case material shall not experience degradation below allowable levels because of the effects of particle radiation, meteoroid impact, or the space vacuum.

As indicated in section 2.2.6.3, the effects of space environment usually are not critical in the selection of case metallic structural materials. However, when operation in space is a

mission requirement, the case must be designed so that the effects of the space environment will not cause degradation below the required operational reliability level or otherwise compromise the mission objective. The expected degradation of material properties or expected damage to the case structure should be determined from applicable data obtained from the references included in the following discussion or from other appropriate references, from specifically designed material evaluations, or by appropriate structural analyses. These recommendations are applicable to selection of the case material and case design and should be used for each of the environmental effects discussed below. The effects of thermal environment are discussed in section 3.2.6.1.

3.2.6.3.1 Radiation

The material design properties should be adjusted for embrittlement, for changes in physical properties, and for a decrease in creep rate when it is expected that damaging doses of radiation will be encountered. Also, a reduction in the mechanical properties of a thin surface layer of the material should be accounted for in establishing the allowable mechanical-property design value when exposure to the inner region of the Van Allen belt or to solar flares is expected (ref. 40, pp. 506-507).

Sputtering in the vacuum of space will cause a loss in material thickness and changes in the emissive characteristics of the surface that should be accounted for in the design. Table IX of reference 24, page 142, should be used as a guide for estimates of the thickness loss per year for various particle sources most likely to be encountered.

A nominal protective shield should be used, where applicable, to prevent degradation of material properties and loss of thickness when sputtering or radiation damage in space are critical design factors (ref. 24, p. 143).

3.2.6.3.2 Meteoroid Impact

The structural material should be selected on the basis that the expected damage to the material surface by meteoric dust will not change its absorptivity and emissivity characteristics so that they are outside the design limits.

The impact of high-velocity meteoroids or manmade objects in orbit can cause serious structural damage during vehicle operation in space. A structural shield should be incorporated into the design, when required, to provide structural protection by fragmenting and dispersing an impinging meteoroid. The case-shield design should be established on a probability basis using the NASA meteoroid environment (ref. 46) and a design approach similar to the methods described in reference 40, pp. 500-506, and reference 47.

These methods can be recommended only as guides, because they are concerned with projectile impact on unpressurized structures. Where specific applications may require motor operation either simultaneous with or subsequent to meteoroid impact, rational methods of structural analysis (sec. 3.3.6) are recommended for evaluating the shock effect associated with impact and the stress-concentration effects associated with any damage sustained by the case structure.

3.2.6.3.3 Space Vacuum

Materials intended for long service exposure to space vacuum should contain a minimum of high-vapor-pressure elements to minimize damage to the material reflective characteristics (ref. 40, pp. 496-498), or should be coated with a low-vapor-pressure coating having the desired reflective characteristics.

Degradation by evaporation of some protective coatings (e.g., certain oxides, cadmium, and zinc) will occur in the space vacuum. The motor case should be protected from attack in those instances when harmful environments may be discharged from the space vehicle by coating the surface with a low-vapor-pressure metal or with an appropriate conversion coating. Table 18-2 of reference 40, page 500, shows the vacuum stability of some very-low-vapor-pressure ceramic and refractory compounds.

Particular care should be exercised to insure that appropriate data on fatigue strength in vacuum are available (ref. 24, p. 145) or that necessary tests are accomplished to develop such fatigue-strength data for the particular material (sec. 3.2.3).

3.2.6.4 Sterilization for Planetary Exploration

The case material shall not experience degradation during sterilization for planetary exploration.

When sterilization is required, the thermal cycling can result in the development of case thermal stresses and thermal fatigue, or it may affect the strength level of an unusually low-temperature heat treatment or otherwise temperature-sensitive material (ref. 49). The selection of material and the design of the case should be accomplished in accordance with the recommended practices established in sections 3.2.3 and 3.2.6.1 to minimize the effects of thermal stress and thermal fatigue. The mechanical properties of the case material should be within established program requirements after exposure to the thermal sterilization environment.

The effect on the material of the chemicals used in the sterilization process (ref. 50) should be known or evaluated by tests (sec. 3.2.6.2) prior to use. The structural material and protective material coatings used should be selected on the basis of their resistance to the damaging effects of the sterilization chemicals at room temperature, at sterilization temperature, and at maximum-service temperature.

3.3 Case Design

3.3.1 General Case Design

The motor case shall be of the minimum weight required for structural capability and rigidity within the overall vehicle design constraints. The case shall meet these conditions without the occurrence of permanent deformations exceeding allowed values and without deflections that adversely affect the specified performance requirements of the rocket motor or vehicle.

The motor case should be designed to have the required structural capability and rigidity while subjected to the critical design loads (sec. 3.3.5) and the effects of the accompanying environmental conditions. Analytical verification of the case structural integrity should be established using the recommended practices for structural analysis (sec. 3.3.6).

To obtain a minimum-weight case, the structure should be designed for the critical service (flight) conditions. Nonservice conditions and environmental exposure (proof loading tests [secs. 3.2.2.1 and 3.5.2], static firing, ground handling and assembly, and storage) should influence the case design to a minimum extent. Ground-handling and processing operational requirements and the training of personnel should be aimed at minimizing case loading. The case design should be analyzed in accordance with fracture-mechanics and structural-analysis practices (secs. 3.2.2.1 and 3.3.6) for all nonservice conditions to assure that exposure to these conditions does not compromise the capability of the case to withstand service conditions.

The case design should be established to obtain positive margins of safety (MS) as close to zero as possible. Some areas of the case, however, are designed on the basis of limiting deflections and rotations rather than on the basis of stress. Such areas can include, for example, reinforcements around igniter, nozzle, and thrust-termination (thrust-reversal) port openings in the case; or cylinder-to-closure transition. In areas of this type, where additional mass is required, it is expected that the margin of safety will be greater than zero; however, the margin of safety in these areas should be the minimum required to limit the deflection or rotation of the specific structural element.

3.3.2 Design Safety Factor

The case shall have the minimum design safety factor required to obtain the specified reliability.

A design safety factor should be used in the design of rocket motor cases to account for contingencies (e.g., underestimation of case loading, underestimation of case stresses, undetected variations in material properties, and undetected manufacturing deviations). The design safety factor should not be used for accumulation of conditions where variables are expected to occur. For example, the limit value of an external load, the maximum amount of angular mismatch developed during welding, and the amount of material thinning during cold forming may not be precisely defined. Where it is known that conditions of this type will occur, such conditions should be evaluated and defined by experimental tests, if possible, or by rational analyses using past and related experience. Where necessary, a uniform factor or arbitrary specification of design limits derived by judgment should be applied to compensate for uncertainties when establishing the case design parameters.

Within the current state of the art, it is not considered possible to recommend a single or specific value of design safety factor that should be used. The design safety factor should be based on the reliability requirements of the specific program. The factor should be applied to all motor case limit loads, including elastic-stability loads and loads resulting from an environmental phenomenon. It should be emphasized that the design safety factor should not be applied redundantly to the physical conditions or environmental phenomena that form the basis for establishing limit loads, or to the parameters that define the case structural capability (e.g., material mechanical properties, membrane thickness, and case geometry).

This recommendation is not necessarily intended to cover development programs involving extension of the state of the art (e.g., any new motor case configuration, new materials, new operation environments, and new operational modes) where variability of the design parameters is being explored. In this circumstance, the uncertainty of the design parameters should be evaluated to determine the minimum design safety factors that will result in case reliability consistent with program needs.

Although it is not evident that the statistical-reliability method (refs. 24, 67, and 68) for establishing the design safety factor has been extensively applied in actual case design, it is apparent that this method, under some circumstances, could result in a more efficient and reliable case. It is recommended that the statistical approach be used to establish the value of the design safety factor only after sufficient investigation has been accomplished to demonstrate its reliability and cost-effectiveness advantages in a particular application.

3.3.3 Case End-Closure Configuration

The case end-closure configuration shall be suitable for the specific application to satisfy the following needs as required: minimum weight, maximum enclosed volume, minimum depth, and fabrication limitations.

The selection of the optimum end-closure profile depends upon the specific case-design needs and should be made on the basis of the significant advantages or limitations of the various closure profiles.

The hemispherical shape provides the most efficient design based on minimum weight per enclosed volume; however, it has the greatest depth. The ellipsoidal design can be either of constant or of varying thickness, has a continuous meridional radius, and eliminates the small radius of curvature in a knuckle region found in the torispherical design. However, high local bending stresses occur in the ellipsoidal design at the junction between the closure and cylinder, and when the depth-to-cylinder-radius ratio is less than 0.707, tangential forces become compressive and tend to induce buckling (refs. 69 and 70). The torispherical closure (ref. 70) consists of a relatively shallow spherical cap and the toroidal section (knuckle). There are several disadvantages in the torispherical design: variation in direct shear stress, high stresses in the toroidal section because of the small radius of curvature, and meridional-curvature discontinuity at the closure-to-cylinder transition point that induces local bending stresses. The varying-thickness Cassinian dome is a modification of the Cassini ovaloid originally suggested by Flugge to match the free deflection of the cylinder and thus eliminate the discontinuity stresses at the juncture between the dome and the cylinder (ref. 71). The ellipsoidal, torispherical, and Cassinian profiles result in closure depths less than the hemispherical profile.

The use of varying-thickness closure designs should be established on the basis of detailed cost effectiveness (increased machining and tooling costs) versus performance tradeoff studies. The lighter weight advantage of the varying-thickness design usually is more effective in upper stage motor case applications. Also, existing head-forming facilities limit the maximum diameter and depth of closures that can be fabricated in one piece. The limitation also depends to some extent on the closure profile. Therefore, any fabrication problems with the end-closure profile should be carefully evaluated, especially for motors approaching 156-in. diameter and larger.

3.3.4 Case Attachment Fittings

Case attachments shall be of minimum weight within specified reliability requirements and cost-effectiveness considerations.

It is not possible to recommend specific attachment configurations, because the attachment design depends on the material used, the loads to be reacted, and the reliability desired for the particular attachment in a particular application. In general, the attachment should be

designed to achieve the minimum weight required to react the design loads encountered and to limit deflection and rotation to values equal to or less than the maximum values established for the particular design.

Motor case attachments represent a critical failure mode, and for this reason, particular care should be exercised to insure that the reliability of the attachment is maintained within specified values. Attachment designs that have been proved by sufficient past experience should be used, or development tests should be conducted to demonstrate the structural and pressure-seal reliability. The compression-face (flange) pressure seal should be used wherever possible. Also, the design should minimize exposure of the sealing element to sharp edges or to excessive contact with mating parts during assembly operations.

With all other requirements of the attachment design satisfied, the attachment design should be cost effective. In most instances, the attachment design selection should be made on the basis of a trade study that evaluates various attachment designs versus attachment weight, reliability, fabricability (type of machining, tools, and facilities required), material utilization (amount of machining required), fabrication schedule, and attachment final-assembly requirements.

3.3.5 Motor Case Loads

The case-loading profile shall include all individual design loads or the worst combination of design loads. The loading profile shall be determined by evaluation of any and all of the following loads.

All axisymmetric and local design loads (for definition of design load, see sec. 2.3.1.1), including dynamic loads (sec. 3.3.7), should be resolved into membrane loads to determine the critical design loading condition. The critical case loading condition, or worst critical combination loading, should be defined by summation of a load-temperature-time history profile of the case. This profile should be prepared by plotting all design loads and temperature exposure encountered (during handling, storage, assembly, and service use) versus time and motor case station. Then, the critical-loading condition for every structural element of the case determined from the loading profile should be used in the case structural analysis (sec. 3.3.6) to determine that not less than zero margins of safety exist at any area of the case while it is subjected to the maximum thermal exposure.

3.3.5.1 Attachment Loads

Motor Igniter

The motor igniter attached to the case structure produces an axial thrust load that is transmitted to the case at the local point of igniter attachment reinforcement. The igniter

thrust should be treated as a local load on the case shell of revolution; it results in increased case tensile, shear, and bending stresses in the igniter attachment flange and adjacent case membrane. These stresses should be added to the basic membrane stresses adjacent to the igniter opening to define the maximum stress distribution in the igniter flange and adjacent case membrane.

Single or Multiple Nozzles

To minimize concentrated loading on the closure, the nozzle opening should be located in the closure at areas free of geometric discontinuities or other reinforcement discontinuities. For the same reason, the location of nozzle ports in the knuckle section of a torispherical closure (sec. 3.3.3) should be avoided where possible.

The nozzle produces an axial load (parallel with the nozzle axial centerline) on the case end closure; this load results from the summation of the internal pressure acting on the upstream vertical projected area of the nozzle from the nozzle throat to the nozzle-to-case-attachment pressure seal minus the pressure within the nozzle acting on the downstream vertical projected area of the nozzle from the nozzle throat to the exit plane. Bending loads that result from the pressure differential between the backside and topside of the submerged section may occur in submerged-nozzle designs. Also, bending loads are produced in nozzle designs with unsymmetrical entrance sections. These bending loads result from the internal pressure acting on the unsymmetrical projected area of the nozzle.

The nozzle axial and bending loads produce increased tensile, shear, and bending stresses in the end-closure nozzle attachment flange and closure membrane. These stresses should be added to the existing closure stresses to determine the maximum attachment-flange and membrane stress distribution.

Thrust-Vector-Control System

The TVC system produces a side load at some angle to the motor centerline. The magnitude of the side load and its location within the nozzle assembly depend upon the type of TVC system used. The TVC side load produces body shear and bending loads in the motor case. The magnitude of the loads at any case location should be determined by preparing a moment-and-shear diagram of the case. TVC systems that extend hardware into the thrust stream (i.e., jet tabs or jet vanes) also produce an axial tension load on the motor case because of the gas pressure acting on the projected area of the TVC hardware in the stream. The tensile, bending, and shear stresses produced by the TVC system should be added to the existing case membrane stresses to determine the membrane stress distribution.

Base overpressure, resulting from exhaust-gas recirculation in the area of the motor aft closure, is not normally of sufficient magnitude to be of concern in motor case design for typical space-vehicle application. However, the effect of base pressure in the area of the motor aft closure should be included in the case loads analysis when the combination of

thrust deflection resulting from TVC and the arrangement of motor structure is such that a pressure buildup will occur. This condition would result in slight overpressure buildup on the aft closure and motor skirt, which should be added to existing loads to determine the critical stress distribution in the aft closure membrane as well as the critical aft motor-skirt buckling condition.

TVC system actuators produce axial, bending, and shear loads locally on the motor case at the point of actuator attachment. Also, the inertia load from TVC system fluid slosh, auxiliary equipment, and equipment-support structure can produce axial, bending, and shear stresses locally in the motor case, depending upon the auxiliary equipment required, and the method of its attachment to the motor case. In addition, axial compressive drag loads on external structure with a large frontal area (e.g., liquid-injection fluid tanks) are transferred through the structure to the case at the point of attachment. These axial (tension or compression), bending, and shear stresses should be added to the existing case membrane stresses to determine the stress distribution at the area of case attachment.

Motor Thrust Skirt

Skirt attachment to the pressure vessel causes two additional loads that must be included in the case design: (1) a discontinuity at the point of attachment can result from the restraint imposed by the skirt on the deflection of the pressure vessel under pressure and (2) the axial thrust can cause considerable additional discontinuity bending loads at the juncture between the skirt and case, depending on the load-line offset between the skirt and the case structural element. The Y-ring design similar to that shown in figure 13 is recommended for skirt attachment and cylinder-to-closure transition. This design provides gradual changes in section thickness without stress concentrations and can be modified to minimize or eliminate large discontinuity loads associated with offset load lines. The cutout (relief) section of the Y-ring shown in figure 13 minimizes discontinuity loads in the cylinder and closure membrane by balancing deflections with appropriate mass distribution. This approach should be used when required to reduce discontinuities.

The discontinuity loads discussed above produce bending and shear stresses in the case at the local area of skirt attachment. These stresses should be added to the existing case membrane stresses.

Clustering Structure

Vehicle clustering results in local loads on the motor case, and the clustering structure should be designed to minimize the concentration of loads at the point where the clustering structure is attached to the motor case. The magnitude and type of clustering loads obviously depend on the vehicle size and the design of the clustering system (refs. 72 and 73). In most circumstances, the clustering structure produces axial tension or compression, transverse shear, and body-bending-moment loads on the motor case. These loads produce additional tension, compression, shear, and bending stresses in the motor case that must be added to the existing case membrane stresses.

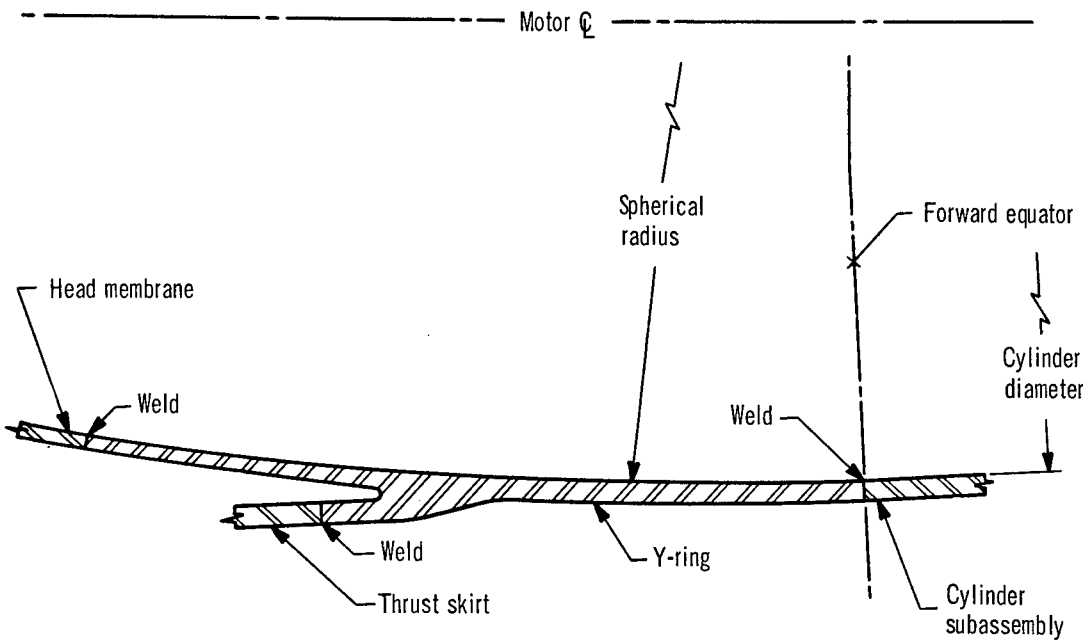

Figure 13.–Y-ring skirt attachment.

Where possible, the clustering structure should be located in the motor skirt or skirt support extensions where sufficient structure can be efficiently incorporated to provide an effective and uniform load distribution to the pressure vessel.

Motor Staging

Staging rockets located in the vehicle interstage structure produce bending and shear loads that are transmitted to the motor case skirt through the interstage structure. These bending and shear loads influence the skirt buckling stability (sec. 3.3.6.4) in combination with overall vehicle axial, bending, and shear loads that may exist instantaneously in the skirt prior to stage separation.

Buckling of the case forward closure should be evaluated when upper stage pressure is used to accomplish staging. An example of the analysis that should be made to determine the pressure load within the interstage is shown in reference 146.

Thrust-Termination or Thrust-Reversal Hardware

The transient pressure load in the case immediately after actuation of thrust termination or thrust reversal is the determining load that influences the design of the thrust-termination or thrust-reversal attachment reinforcement and adjacent case membrane. If the pressure drop is rapid enough, the system may not require a reinforcement around the opening. In any

event, the transient-load condition in the area of a port must be analyzed to determine the maximum-loading condition to establish the maximum stress distribution in the reinforcement (if used) and the adjacent case membrane.

With either thrust termination or thrust reversal, a thrust spike occurs that imposes a load on the entire case structure. The magnitude and transient condition of the spike must be analyzed in combination with other existing case loads to determine the maximum case loading. If the thrust-reversal system has stacks through the interstage, discontinuity bending loads in the local area of the thrust-reversal port may result from differential expansion between the interstage structure, stack, and case. When these bending loads occur, they produce bending stresses that should be added to the existing membrane stresses.

Aerodynamic Control Surfaces

Where possible, the aerodynamic control surfaces should be attached to the case skirt, motor-support skirt, or interstage structure where an efficient load-transfer structure can be incorporated in the component design for more uniform load distribution to the motor case.

The aerodynamic control surfaces result in loads arising from both local and overall body tension; from compression; from shear; from bending; and from torsion; depending on the control-surface design and function, and whether the control surfaces are attached remotely or directly to the pressure vessel. These loads produce corresponding stresses in the motor case, which should be added to the existing case stresses as required by the particular control-surface design and location.

Instrumentation, Electrical, and Destruct-System Hardware

In current motor designs, instrumentation, electrical, and destruct-system hardware result in negligible motor case loads. However, should hardware of appreciable mass be attached to the motor case, the stresses resulting from inertia and discontinuity bending loads should be added as required to existing case stresses in the area of attachment.

3.3.5.2 Internal Loads

Internal Pressure

The internal design pressure (i.e., the maximum expected operating pressure (MEOP) multiplied by the design safety factor) should be treated as a uniform pressure acting on the internal case structure. The maximum expected operating pressure should be determined by statistical methods (3 standard deviations) including the evaluation of internal combustion

pressure and the influence of propellant composition and grain variations, erosive burning, ignition transient, and propellant temperature. Also, an aft-end igniter (ref. 147) located in the nozzle area can obstruct gas flow and thereby increase the case internal pressure (depending on igniter design). If an aft-end igniter is used, the maximum internal case pressure should be determined by analysis or by appropriate subscale or full-scale tests, and the maximum pressure obtained should be used to establish the case-design internal-pressure load.

The internal pressure produces hoop (circumferential) and meridional (axial) biaxial loads in the motor case structural membrane. The biaxial load should be calculated on the assumption that the aft-end closure has an opening equal in area to the unrestricted gas passage of the installed nozzle assembly. In some instances, the case is hydrostatically proof tested with fully closed (plugged) end closures. When proof test of the fully closed pressure vessel is a program requirement, the internal-pressure-limit load (sec. 2.3.5) should be established as the critical (maximum) case load resulting either from MEOP in conjunction with external flight loads or from the MEOP with a fully plugged case.

Axial Thrust

The motor thrust produces an axial load on the motor case that should be calculated by summation of the aerodynamic drag load, the inertial force, and the vehicle weight above the case station of interest (ref. 65, p. 5). The method of computing the thrust load distribution on a motor case during motor firing is shown in figure 14. In figure 14, the local axial load is computed by summing the local pressure loads on the vertical projected areas of the case to the right or left of a station, reduced by the inertial loads of the segment to the right or left of the station (ref. 65, pp. 3-5).

Thrust Misalinement

The thrust misalinements that should be analyzed are the radial displacement between the motor centerline (thrust line) and the nozzle centerline and the angular displacement between the motor centerline and the nozzle centerline. Additional thrust misalinement that should be included in the analysis exists in clustered motors, where three classes of quasi-steady misalinement can occur (ref. 72): angular misalinement of a motor in a cluster with respect to the total vehicle geometry, displacement of the motor thrust vector in a cluster with respect to the vehicle center of gravity, and deviation of a motor thrust level within the cluster.

In all cases of thrust misalinement, the motor case experiences a static body bending and shear load resulting from the thrust deviation from the vehicle center of gravity and from any shift in the vehicle center of gravity. The bending moment is reacted by the inertia of the vehicle mass and by the TVC system.

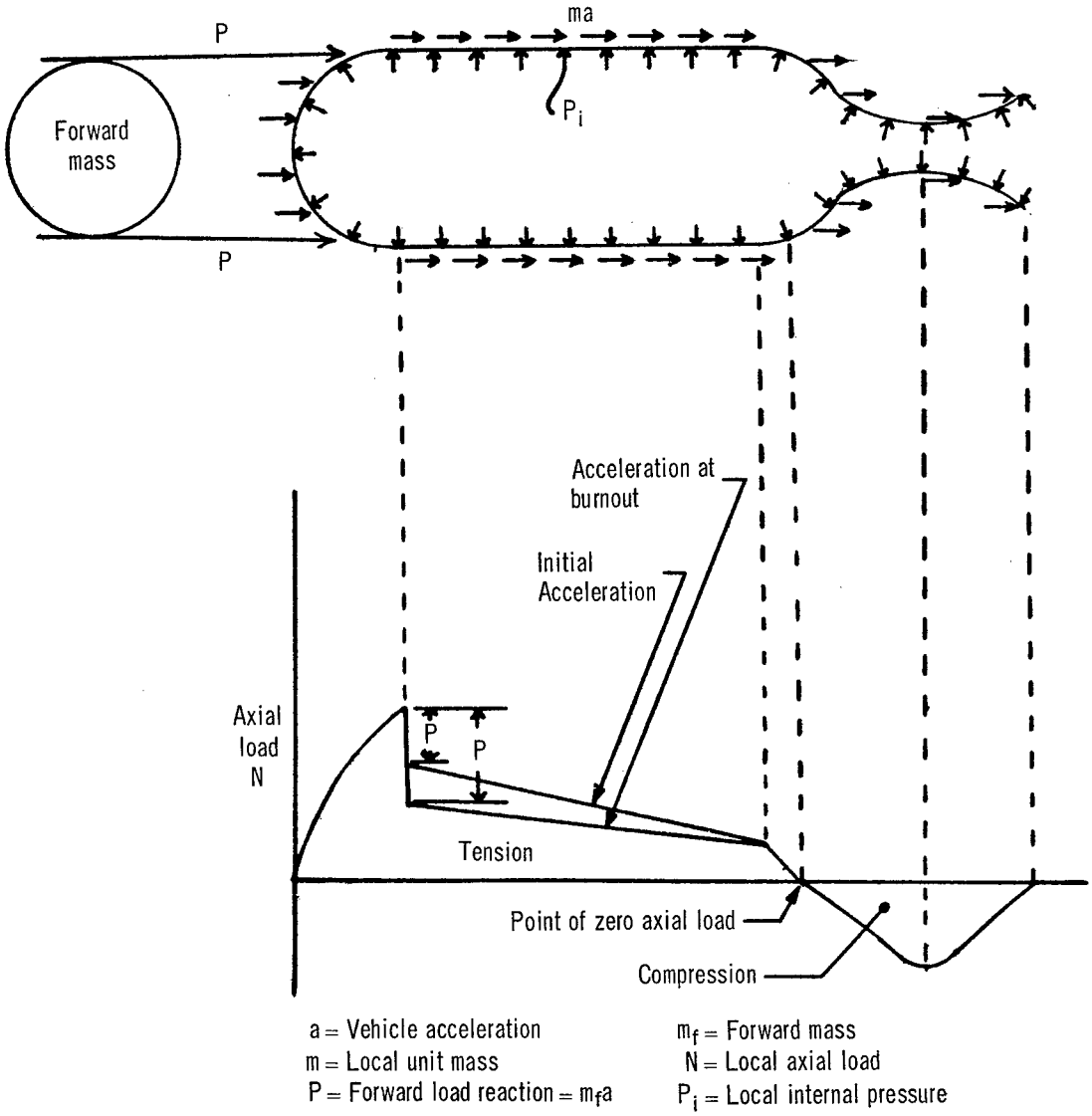

Figure 14.–Thrust load on a rocket motor (ref. 65, p. 4).

Thermal Stresses

Thermal stresses (sec. 2.2.6.1) are produced by thermal gradients within the case structure and by differential expansion of materials that have different coefficients of thermal expansion. The thermal stresses produce biaxial loads, discontinuity bending, and shear loads that should be included in the case membrane stress analysis where thermal stresses are encountered (ref. 65, pp. 91-114).

3.3.5.3 External Loads

Ground Handling

Tension, compression, shear, torsion, and bending loads, both axisymmetric and local, occur during ground handling, shipping, and assembly of the motor case, depending on the handling and support-equipment design. The handling operations and the type of equipment used during handling should be analyzed to determine the magnitude and type of handling loads that will be experienced by the motor case. No handling loads should exceed flight loads.

Launch-Pad Loads

In most applications, the motor case must have free standing capability on the launch pad after assembly of the entire vehicle, with the given stage unpressurized and the given stage and all upper stages fully loaded, or with external wind loads acting on the vehicle as well. Steady wind, wind gusts, and the turbulent wake from nearby structures produce body-bending and shear loads on the motor case while the vehicle is on the launch pad. Recommended practices for determining the prelaunch ground wind loads are contained in reference 148.

These weight and wind loads produce an interaction of axial compression, body-bending, and body-shear loads on the case that influence the buckling stability of the case (sec. 3.3.6.4).

Flight Loads

Atmospheric lift and drag produce case body-bending and shear loads during yaw and pitch flight control of the vehicle. The magnitude of the case body-bending and shear loads should be determined by preparing a vehicle shear-and-moment diagram using the maximum loads encountered. The roll mode of flight control and spin stabilization during flight produce body-torsion loads on the motor case that should be evaluated in the stress analysis.

Dynamic pressure acting on the vehicle frontal area produces axial compressive loads on the case during flight. The compressive loads influence the buckling stability of the case (sec. 3.3.6.4), particularly in unpressurized upper stage motor cases.

Wind gusts and steady-wind shear produce motor case body-bending and shear loads on the motor case during flight through the atmosphere. The magnitude of the case body-bending and shear loads is determined by preparing a bending-moment-and-shear diagram using the maximum wind loads determined from the specified atmospheric wind profile.

3.3.6 Structural Analysis

3.3.6.1 Thin-Shell Structure

The case design stress shall not exceed the allowable stress, whether yield or ultimate; and the maximum deflections shall not exceed allowed deflections.

The motor case should be analyzed using general linear elastic theory based on Love's first approximation for thin shells (refs. 74 to 78), in which the following assumptions are made.

(1) The shell thickness is negligibly small compared to the principal radii of curvature of the shell middle surface.
(2) Linear elements normal to the unstrained middle surface remain straight during deformation, and their normal strain is negligible.
(3) Transverse shear strains are 0 throughout the thickness.
(4) Stresses normal to the shell surface are negligible.

The following factors should be included in the requirements for the structural analysis.

(1) Loads used should be design loads (sec. 3.3.5).
(2) Combined loading should be analyzed to determine the resultant stresses using the interaction equations available in reference 55 (and in most texts on stress analysis).
(3) When internal loads or other loads are compensating or are otherwise beneficial to the structural capability of the motor case, the minimum 3-standard-deviation values of the compensating load should be used for the particular stabilizing design condition being evaluated.
(4) The maximum permissible permanent strain anywhere in the motor case should be limited to 0.2 percent, except where plastic deformation in local regions of stress concentration may be unavoidable in the case design. (For example, see sec. 3.3.6.4.)
(5) Loads and load distributions used should be established on the basis of the worst (or most critical) buildup of case-design dimensional-control tolerances.
(6) The case thickness used should be the minimum thickness considering the maximum limit of material-procurement tolerance and any change that will occur during fabrication and processing (e.g., thinning of the material during forming).
(7) The material allowable strength used should be the minimum uniaxial strength guaranteed by the material procurement specification using the specified heat treatment, and should include any additional strength reduction resulting from fabrication and processing (e.g., welding). The minimum strength-value determination should also include additional factors applicable to the specific design (e.g., elevated-temperature strength, fatigue strength, creep strength, and any further reduction required by fracture-mechanics considerations). The 0.2-percent offset yield-strength value should be used with materials that have no sharply defined yield point.

(8) Biaxial strength should be used only when sufficient data have been obtained and when sufficient structural analysis has been accomplished to verify the actual condition of biaxial gain in the case. When biaxial gain is used, particular care should be exercised to determine the actual properties (sec. 3.2.2) that exist for the particular case design. The biaxial stress state, particularly in areas of discontinuity (e.g., cylinder-to-closure transition) should be determined by tests of a strain-gage-instrumented pressure vessel or by detailed analysis. The actual stress state is influenced by the change in radius of curvature and the meridional tension effect. In areas of bending, both the inner and outer fiber membrane stresses should be evaluated in the applications of biaxial gain.

(9) The structural analysis of every element of the case should be done using the critical-loading condition determined from a summation of the motor case load-time-temperature history profile.

(10) To obtain the most efficient design in geometric-discontinuity areas, the stabilizing effect of the longitudinal-membrane loads on the discontinuity shears and moments, as evaluated by meriodional tension effect analysis (refs. 84 and 149), should be incorporated into the overall analysis.

The structural analysis should also be used to identify areas of high stress concentration and compound discontinuity loads, if not previously apparent; if necessary, the case should be redesigned to eliminate or minimize the area of concentration or compound loading.

3.3.6.2 Local Attachments and Openings

The design stress at case local attachments and openings shall not exceed the allowable stress, whether yield or ultimate.

A finite-element computer program similar to that shown in reference 88 should be used in the analysis of the reinforced openings, reinforcing pads, nonaxisymmetric openings, and shell-supported rings when the reinforced thickness does not exceed four times the shell thickness. This computer program will handle a shell structure of arbitrary geometry and loading, and will also handle the intersection of two shells. The program was formulated by approximately representing the shell structure as a series of flat plate elements, expressing the membrane and bending characteristics of a plate element by combining a plate bending element and a plane-stress element, and insuring the compatible response of adjacent elements.

The NACA TN 929 ring analysis method (ref. 87) as modified for particular needs should be used for an approximate analysis of attachment fittings. Where critical loads or marginal safety factors are indicated, a more precise analysis should be performed using the plane-strain, finite-element technique (refs. 91 and 92).

3.3.6.3 Local Weld Discontinuities

The stress level at a weld shall not exceed the maximum value that can be tolerated by the specific material within established reliability requirements.

In a complex welded structure, there are residual stresses of a finite magnitude prior to any service loading. These stresses are primarily the result of forming and welding operations. Also, local bending stresses that occur during pressurization because of radial mismatch and angular mismatch (angular discontinuity at a weld resulting from weld sink) and discontinuity stresses from any adjacent source (e.g., Y-ring reinforcement) are possible and are superimposed on the residual stresses. With these additive stresses, the yield strength of the material can be reached at a relatively low level of internal pressure.

The importance of the local stresses depends largely on the toughness and ductility of the material used. In very tough and ductile materials, the local areas that exceed the yield stress will bridge the load by stress redistribution to adjacent membrane without failure, perhaps even in the presence of a defect. However, if the material has insufficient ductility, the local discontinuity stresses may not have a chance to redistribute before failure occurs.

Therefore, welds in brittle material should be designed for the full elastic stress resulting from the direct membrane stress and all discontinuity stresses. As an example, the elastic bending stress caused by mismatch across the longitudinal weld can be simply expressed as

$$\sigma_h = \frac{3pR\delta}{t^2}$$

where

p = Pressure
R = Radius of cylinder
δ = Amount of mismatch
t = Chamber thickness

Because the basic membrane stress is pR/t, it can be shown that the elastic stress from mismatch is equivalent to $3k$ times the membrane stress, where k is the mismatch in terms of percent of thickness. Thus, for a 5-percent mismatch, the bending stress would be 15 percent of the membrane stress.

If the residual stress is assumed to be 10 percent of the yield strength F_{ty}, the angular mismatch is assumed to be 20 percent of the yield stress, the design stress is the material

yield strength, and the longitudinal-weld mismatch is 5 percent of the thickness, then the maximum elastic outer fiber stress across the weld at design pressure is

$$\sigma_h \text{ (max)} = \text{residual} + \text{angular mismatch} + \text{radial mismatch} + \text{direct membrane}$$

$$= 0.10\ F_{ty} + 0.2\,F_{ty} + 0.15\,F_{ty} + F_{ty}$$

$$= 1.45\ F_{ty}$$

The values used in the above example are representative of those that might occur in practical motor case design, but specific values vary depending on the individual design (e.g., both angular and radial mismatch can be minimized or eliminated in components that are machined following welding, and angular mismatch can be minimized or eliminated by rerounding after welding).

Welds using ductile materials can be designed to allow a certain degree of yielding; however, a recommendation for a specific amount cannot be made. Whenever this design approach is used, it should be qualified by knowledge developed from specimen or burst tests representing the material and the discontinuities to be encountered. Whether the weld is designed for the full elastic stress or is designed to allow local yielding, the effect of the maximum elastic stress on the critical defect size should be evaluated. The residual stress and the angular and radial mismatch discontinuity stresses for both longitudinal and girth welds for large motor cases (156-in. and 260-in. diameters) using GTA-welded 200-grade 18 percent nickel steel, and GTA and submerged arc-welded 250-grade 18 percent nickel steel (ref. 95) have been evaluated. Correction factors for allowable flaw sizes are developed for these discontinuity conditions, including a girth weld adjacent to a Y-ring reinforcement. Although this study is directed toward large motor cases, it is representative of the factors that should be considered in any case-weld design.

3.3.6.4 Buckling of Thin-Wall Shells

The case buckling load, or worst combination of buckling loads, shall not exceed the allowable buckling load.

The motor case structural analysis must include the buckling analysis (ref. 65, pp. 84-89) for any of the loads defined in section 2.3.6.4 to insure that the buckling load in the case or in the case forward or aft skirt does not exceed the load that causes the onset of buckling. When the motor case may be subjected to a combination of buckling loads acting simultaneously, the buckling analysis should account for the interaction of these loads in accordance with the interaction equations provided in reference 65, pp. 195-197.

The beneficial effect of the propellant grain stiffness on buckling can be included in the case analysis when use of this analysis technique is necessary to determine the maximum buckling capability of the motor case. This approach is applicable only when the critical buckling loads, determined from the motor case load-time-history profile, occur at a time when the propellant grain is available to provide the beneficial effect. The following analysis techniques should be considered for use:

(1) An analysis of finite cylinder stability with an elastic core, as made by Seide (ref. 103)
(2) An evaluation as made by Brush and Almroth (ref. 104) of the elastic core as subjected to generally axially symmetric lateral pressure combined with a central axial force, with numerical results given for three lateral pressure distributions (uniform pressure, linearly varying pressure, and a circumferential band of pressure)
(3) An analysis of the stability under torsion of circular cylindrical shells with an elastic core, as shown in reference 105.

3.3.7 Structural Dynamics

The case shall withstand all transient and steady-state dynamic loads, or the worst combination of dynamic loads and critical static loads.

Detailed dynamic analysis of the particular stage and the vehicle should be performed to insure that the motor case design is adequate for all imposed transient and steady-state dynamic loads. The dynamic loads imposed on the motor case as determined from the individual dynamic analysis should be integrated into the case structural analysis (sec. 3.3.6). The axial, shear, and bending distribution resulting from transient dynamic loading conditions should be compared with equivalent static loading conditions, and should be included in the case load-time-temperature-history profile. The transient dynamic stresses should be combined with any static or steady-state vibratory stresses when applicable.

Recommendations for specific methods of analysis for all dynamic conditions are beyond the scope of this monograph. However, brief discussions of the analysis techniques that may be used are presented.

Classical methods or closed-form solutions for dynamic analysis are discussed in reference 107. The finite-element approaches to the analysis of the solid rocket motor are less exact, but do provide engineering solutions to the dynamic problems (refs. 108 to 110).

The interest in dynamic analysis of clustered structures has been motivated by the Saturn launch-vehicle development and the identification or recognition of the dynamic interactions of clustered structures, which became evident during vibration tests of the Saturn subscale models. At the present time, the analyst has a choice of several methods (refs. 111 to 114) of analysis of clustered structures, including matrix techniques or continuous-

mechanics methods. Hurty's method (ref. 114) of component modes is also applicable to cluster dynamic analysis and offers some advantage, particularly if the influence of the solid propellant is to be included.

3.3.7.1 Bending Frequency

The case body-bending frequency shall be within the limits imposed by the vehicle flight control system or transient dynamic loads.

The overall longitudinal, cluster-mode, and transverse body-bending frequencies of a vehicle are dependent on the mass distribution of the vehicle and the case structural stiffness of each individual motor. The motor case stiffness, including EI, GJ, and AE distributions, should be defined and used in the dynamic-model analysis of the vehicle, where

E = Modulus of elasticity
I = Moment of inertia
G = Modulus of rigidity
J = Torsion constant
A = Area of cross section

Motor case stiffness should be consistent with the minimum required to insure stable aeroelastic behavior of the vehicle, to insure structural adequacy under transient dynamic loads, and to limit the body-bending frequencies to within the guidance and control system capabilities (refs. 115 and 116). The motor case stiffness should be controlled by the proper selection of case thickness (I, J, and A) or material selection (E, G).

3.3.7.2 External Dynamic Environment

3.3.7.2.1 Transportation and Handling Loads

Transient dynamic loads imposed during transportation shall not exceed the loading capability of the case designed for flight.

Procedures for shipping and handling of solid rocket motors should use suitable packaging and harness supports to limit the transient dynamic loads imposed during handling and shipping to within the load capability of the case designed for flight. The dynamic characteristics of any suspension system and any shock- or vibration-mitigation systems included in the handling equipment or shipping container should be included in the dynamic analysis of the solid rocket motor for transportation and handling environments. The dynamic loads experienced by a solid rocket motor depend on the design of the transportation and handling equipment and may consist of axial, torsion, and body-bending loads on the motor case, localized loading at motor-support areas, and vibratory loading induced into motor-attached components.

3.3.7.2.2 Transient Longitudinal Loads

The case shall withstand the maximum transient longitudinal loads.

The transient dynamic longitudinal loads experienced by the motor case result from motor ignition and shutdown, thrust termination and stage separation, and vehicle release following holddown; they occur also during static firing. Compressive and tensile loads are induced in the motor case and skirts as a result of these transient conditions. The dynamic analysis for these conditions should include the dynamic characteristics of the remaining vehicle or of the test stand when applicable.

The vibratory influence of the solid propellant may be significant for this loading condition, depending on the physical size and length-to-diameter ratio of the motor, and should be included in the dynamic analysis (refs. 107 to 110). Adverse conditions encountered because of longitudinal loading should be eliminated by proper control of the vehicle longitudinal modes (*AE* distribution) or by increase in motor case thickness, diameter, or material modulus of elasticity.

3.3.7.2.3 Transient Transverse Loads

The case shall withstand the maximum transient transverse loads.

Transverse dynamic loads on a motor case result from the transient response of the vehicle to steady-wind shears and gusts, buffeting, and thrust-vector-control inputs. The determination of the shear and bending dynamic loads should include the vehicle dynamic characteristics (natural frequency in bending) and the harmonic content of the forcing function. Dynamic interaction between the guidance and control system, the TVC system, and the vehicle should also be included in the analysis.

Adverse conditions resulting from transient loading should be eliminated by proper control of the natural frequency in bending (sec. 3.3.7.1) and by varying the motor case stiffness through changes in case thickness or material modulus of elasticity. The influence of the solid propellant on vehicle dynamics is less significant for transverse loads than for longitudinal loading conditions, but should be evaluated for very large solid rocket motors (refs. 107 to 110).

3.3.7.2.4 Vibratory Bending Stresses

The case and skirts shall withstand the maximum vibratory bending stresses.

The motor case and skirt are subject to acoustical loading resulting from the noise generated by the rocket exhaust and from boundary-layer noise over the vehicle. The solid propellant itself and internal pressure usually provide sufficient stiffness and damping of the pressure vessel to reduce case loading resulting from this environment to negligible levels. In the unlikely event that the case does require additional stiffness, this should be provided by increasing the case thickness.

The effects of acoustical excitation of the motor skirt should be evaluated with particular attention given to the dynamic loads resulting from the attachment of components to the skirt (refs. 118 and 119). Vibratory bending stresses are induced at component attachments and skirt stiffeners. The addition of doublers at critical locations should be used as required to minimize or eliminate the vibratory-stress condition.

3.3.7.2.5 Coupled Dynamic Loads

The case shall withstand the maximum coupled transverse and longitudinal dynamic loads resulting from motor clustering.

Vehicles employing a clustered or strap-on configuration of rocket motors will encounter dynamic loads in addition to those defined in sections 3.3.7.2.1 through 3.3.7.2.4. These additional loads, resulting from nonsymmetrical ignition, motor burnout, and TVC of clustered motors, should be evaluated. Design modifications to eliminate adverse dynamic problems in clustered configurations should be made by increasing both the stiffness characteristics of the clustering structure and the stiffness of the motor case (sec. 3.3.7.1).

3.3.7.3 Internal Dynamic Environment

3.3.7.3.1 Pressurization Transients

The case shall withstand the pressurization transients of motor ignition.

The ignition transients of current motor designs are an order of magnitude less than the structural response modes of the motor and result in a noncritical quasi-static loading condition (ref. 107). However, for designs that may encounter critical loading conditions with the pressurization transients, an increase in case thickness or material modulus of elasticity should be incorporated to increase the radial dynamic response of the motor case.

3.3.7.3.2 Other Internal Dynamic Loads

The motor case and case attachments shall withstand the dynamic loads resulting from ignition shock, thrust termination, and oscillatory propellant burning.

The transient nature of motor ignition and command thrust termination produces a shock and vibration environment on the case and skirts of a solid rocket motor that is difficult to predict in magnitude. The structural design of case component attachments should include the transient loads produced by these environments. Preliminary estimates of the environment should be obtained from reference 150 or from previous experience with similar motors. These estimates should be verified by actual measurement during full-scale or subscale static firing. Doublers or other reinforcements should be used as required to insure the structural integrity of component attachments subject to these shock and vibration environments. Also, the resonant frequency of component mounting structure should be well separated from the frequencies of oscillatory propellant burning that may occur at the acoustical modes of the gas cavity of the motor.

3.4 Case Fabrication

3.4.1 Fabrication Cost and Reliability

The case fabrication processes shall be the most reliable, least time consuming, and the most cost effective for the particular case and program needs.

An engineering study of fabrication processes should be accomplished to select the fabrication processes that afford the best compromise between fabrication schedule and costs without reducing reliability below specified levels. The engineering study should include detailed tradeoff evaluations of fabrication (ref. 24, pp. 153-157, and ref. 120) and welding processes; past experience with and reliability of the various processes; schedule effect of the processing; and fabrication, tooling, and facility costs versus the case configuration. Advantages and disadvantages of some fabrication processes that may be used are provided in table III.

The material behavior when exposed to various fabrication processes should be included as a tradeoff parameter when alternative structural materials are evaluated.

Table III.–Comparison of Case Fabrication Methods

Component	Fabrication method	Advantages	Disadvantages
Case closure	Hydroforming	Low unit production cost High material utilization	High initial tooling cost Limited to cold working Currently limited to small cases
	Hot shear spinning (including combination of conventional spinning and shear spinning)	Integral attachments and skirt Elimination of welds	Low material utilization Limited process availability in large sizes
	Deep drawing	High production rates Integral attachments when combining machining operations	High tooling costs Size limited because of force required
	Explosive forming	Reproducibility High material utilization	Limited process availability Limited experience with wide variety of materials and shapes
	Forge and machine	Integral attachments Complex configuration Elimination of welds	High end-item cost Low material utilization Limited to moderate sizes
	Form and weld (including bump forming, conventional spinning, flange mill forming, or any combination of methods)	No component size restriction Fabrication time High material utilization Wide availability	High welding cost High inspection cost High tooling cost Contour control (depending on tooling complexity)
Case cylinder	Roll and weld	Low cost Wide availability Size limited only in cylinder length by material width Simple process	Reduced reliability with longitudinal weld
	Shear spinning	High material utilization Integral reinforcements Tapered thickness capability Elimination of welds Use with wide variety of materials Strength increase with improved fracture toughness (compared to unworked material at the same strength level)	High cost for small production quantity
	Drawing	Elimination of longitudinal welds Reduction of inspection cost High material utilization	Case size limitation Dimensional control in thin wall cases High tooling cost

3.4.2 Fabrication Effects

The case fabrication processes shall not produce undesirable effects on the motor case material and the end product.

The primary concern in selecting fabrication processes, particularly for new materials, is to avoid fabrication processes that will have a harmful effect on the material and end product. This selection requires a detailed knowledge of the effect that fabrication processes will have on the material and the motor case end product. If not available, this knowledge should be developed in a material- and process-evaluation program. An example of such a program that should serve as a guide is shown in reference 60. This program was designed to investigate the parent plate, forging, and weld-wire basic material, and fabrication processes including welding and weld repair, forming of parent metal and welds, machining, heat treatment, and material susceptibility to stress corrosion. The program was concluded with fabrication and burst tests of subscale test chambers using the material, the fabrication processes, and the nondestructive test or inspection processes intended for use during actual motor case fabrication.

3.5 Testing and Inspection

3.5.1 Destructive Testing

Destructive testing shall be adequate to evaluate the basic case design, to accomplish material and process evaluation, and to certify conformance of the case design, material, and processes to the program requirements.

It is not possible to make across-the-board test-plan recommendations, because there are numerous possible combinations of detail design, structural material, and fabrication and inspection processes. For convenience and clarity, specific recommendations are made throughout the monograph text in each subject area where destructive testing would contribute to the fundamental objective of obtaining a reliable motor case at the least cost.

Where applicable, test specimens should be designed and tested in accordance with the requirements specified in references 28, 29, and 122. Required test specimens and test procedures that differ from those specified in the references should be designed to use applicable technology to meet specific needs.

The destructive test of full-scale motor cases, particularly of large motor cases, is often prohibitive from a cost standpoint. However, destructive testing of properly designed subscale pressure vessels should be used where necessary for evaluating the full-scale case.

The subscale test vessel must be designed to duplicate the following parameters for the full-scale pressure vessel:

(1) The case-wall thickness (subscale membrane burst stress equal to the expected burst stress of the full-scale case)
(2) Production materials
(3) Fabrication processes
(4) Inspection methods

Appropriate applications for subscale burst tests are noted in the text of this monograph (secs. 2.2.2, 2.5.1, 3.2.2, 3.2.6.2.1, 3.3.5.2, and 3.4.2).

3.5.2 Nondestructive Testing

3.5.2.1 Inspection Plan

The inspection master plan shall incorporate inspection processes for use from initial material procurement through case final acceptance to the extent necessary to maintain a specified reliability level.

Inspection processes (NDT) should be used throughout the motor case program beginning with material procurement and continuing through fabrication, process control, and final acceptance. Each phase can use different inspection techniques with different acceptance or rejection standards. For this reason, an overall master plan for the use and management of the quality-control program should be established prior to the start of fabrication (ref. 32, pp. 95-104). The scope of the master plan should be established on the basis of the required reliability level, the type and orientation of defects encountered, and the process sensitivity required. Also, the master plan should require the periodic evaluation of the equipment and of the skill and alertness of the operators; it should also provide for random checks on the execution of the planned requirements and procedures.

Particular caution should be used in planning the inspection requirements and in applying the inspection program so that material characteristics and fabrication processes that can affect the integrity of the inspection are identified. As an example, retained austenite in the heat-affected zone of 18 percent nickel maraging steel weld (particularly in areas of weld repair) is nonmagnetic. These nonmagnetic areas can mask real surface defects during magnetic-particle inspection. If masking should occur, either the magnetic-particle inspection should be replaced by dye-penetrant inspection, or dye penetrant should be used as a backup inspection in the nonmagnetic areas. Also, surface finish and treatment affect the inspection sensitivity (e.g., defects can be masked in X-ray by a rough weld crown, and grinding operations can close a surface defect to dye penetrant).

3.5.2.2 Inspection Processes

The inspection processes shall have the capability of detecting all critical defects.

In high-strength-material applications, the minimum inspection process recommended is the use of radiographic, ultrasonic, and magnetic-particle or dye-penetrant inspection of weld, and ultrasonic and magnetic-particle or dye-penetrant inspection of the parent material. Appropriate inspections should be made after critical events (i.e., heat treatment and hydrostatic test). The detection capability of each process used should be known from past experience or should be demonstrated by tests, using the production equipment, materials, and process sensitivity.

The ultrasonic-inspection process can be improved through the use of multiple transducers in an automated system (ref. 95) and should be used when practical. To minimize the possibility that the inspector may overlook a small indication, an audible-alarm system that signals indications above a predetermined amplitude should be incorporated in the ultrasonic equipment.

Limitations sometimes exist in the determination of precise accept-reject standards for ultrasonic inspection of welds (particularly of welds with weld crowns). In this instance, the ultrasonic-inspection process should be used as a tool for inspection of small defects for information only to pinpoint areas for more extensive radiographic inspection.

3.5.2.3 Hydrostatic Proof Test

The hydrostatic proof test shall demonstrate the case structural integrity for service use.

The case hydrostatic proof test should be designed using fracture-mechanics theory (ref. 28, pp. 249-278, and ref. 30) to assure that the proof test actually defines the maximum possible initial flaw size in the case and demonstrates that the case has sufficient structural integrity to sustain the subsequent service pressurization cycle. Test pressure, test temperature, external axial and bending loads, and pressurization rates should be in accordance with specific program requirements.

The critical flaw size at the motor operating pressure is larger than the maximum proof-test flaw size by a factor of the proof-test factor α squared; i.e., the maximum initial flaw size is $1/\alpha^2$ times the critical flaw size and the flaw growth potential in the motor case is equal to $(1 - 1/\alpha^2)$ times the critical flaw size (refs. 28, 30, 61, and 126). This concept, in combination with both fatigue and sustained-load crack-growth data, should be used to determine the motor case life-cycle expectancy. The effects on the material of the most critical combination of conditions (e.g., corrosive environment, hydrostatic-test fluid,

minimum service temperature, maximum strength level) should be evaluated in determining crack growth and fracture toughness of the materials. The hydrostatic-test media used during the proof test should not result in stress-corrosion cracking (sec. 3.2.6.2.3).

Therefore, if the load-time history of the motor case and crack-growth characteristics of the material are known, this approach should be used to determine a minimum proof-test factor that will demonstrate the service integrity of the motor case. In any event, the proof-test pressure should not be less than 1.05 times the maximum expected operating pressure.

One proof pressure cycle with the case subjected to pressure over the minimum required elapsed time in a noncorrosive environment at the critical operating temperature is sufficient to demonstrate the structural integrity of the case. Axial thrust and bending loads simulating maximum service loads should be applied to the case skirt concurrently with proof-test maximum pressurization. The hydrostatic proof test should be repeated if the case is damaged or if any other conditions occur that could jeopardize the integrity of the case or the validity of the test data.

REFERENCES

1. Alexander, R. V.: Cost and Performance Considerations in the Selection of Structural Materials for Ultra-Large-Size Booster Motors. J. Spacecraft Rockets, vol. 1, no. 1, Jan.-Feb. 1964, pp. 62-67.

2. Alexander, R. V.; Apodaca, A. R.; and Fournier, C. A.: Cost and Performance Considerations in the Selection of Structural Materials and Propellants for Multi-Stage Solid Rocket Vehicles. Preprint 2415-62. ARS Structural Materials Conference, April 1962.

3. Alexander, R. V.; and Fournier, C. A.: A Practical Method of Selecting Structural Materials for Multi-Stage Solid Rocket Vehicles on the Basis of Cost. Ballistic Missile and Aerospace Technology. Vol. I, Academic Press, Inc., 1961.

4. Levy, A. V.; et al: Materials Design Criteria for Solid Rockets. Rep. 7U3613, Aerojet-General Corp., Mar. 10, 1967.

5. Large, J. P.: Concepts and Procedures of Cost Analysis. Rep. RM-3589-PR (AD411554), The Rand Corporation, June 1963.

6. Anon.: The Integrated Design Computer Program and the ACP-1103 Interior Ballistics Computer Program. Rep. STM-180, Aerojet-General Corp., Dec. 1964.

7. Anon.: Solid Rocket Motor Vehicle Optimization Computer Program–Final Report. Rep. TR 65-170 (Allison Rep. EDR 4378), Air Force Rocket Propulsion Laboratory, Jan. 1966.

8. Bodwell, J. M.: Summary Presentation of Program Omega. Document D2-36023-1, The Boeing Co., July 1964.

9. Hartsook, L. B.; Torres, F. P.; and Wheaton, R. J.: Multi-Stage Design Optimization and Two Dimensional Trajectory Program for Missile Systems Vehicles–Program Alpha I. Document NOR 62-149, Norair Division, Northrop Corp., Feb. 1963.

10. Anon.: A Study of Performance Tradeoffs for Solid Propellant Propulsion Systems–Final Report. Rep. AFRPL-TR-65-65 (Lockheed Propulsion Co.), Air Force Rocket Propulsion Laboratory, Mar. 1965.

11. Vellacott, R. J.: Design Study of Solid Propellant Configurations. Rep. 28-61 (Thiokol), Army Missile Command, Redstone Arsenal, July 1961.

12. Alexander, R. V.: The Integrated Design Program. Proceedings of the Ninth Meeting of the ICRPG Working Group on Design Automation, July 1964, CPIA Publication 55, Aug. 1964, pp. 5-21.

13. Alexander, R. V.: Program Beta, A Digital Computer Program for High-Speed Analysis of Performance, Preliminary Design, and Optimization of Solid Rocket Vehicles. Preprint 2319-62, ARS Solid Propellant Rocket Conference, Jan. 1962.

14. Dobbins, E.; Whitehurst, D. C.; and Flemig, E. R. A.: Future Goals of Propulsion System Design Techniques. Preprint 2320-62, ARS Solid Propellant Rocket Conference, Jan. 1962.

15. Dudley, D. P.; and Alexander, R. V.: A Conceptual Design Program for Hybrid Propellant Rockets. Preprint 34c, Fifth-Sixth National Meeting of the American Institute of Chemical Engineers, May 1963.

16. Hammon, D. J.; and Brinton, B. C.: The Thrust Vector Control Preliminary Design Program. Proceedings of the Thirteenth Meeting of the ICRPG Working Group on Design Automation, Oct. 1965, CPIA Publication 98, Dec. 1965, pp. 31-42.

17. Moody, E.; Geaslen, W. D.; and Florman, I. S.: Solid Propulsion System Design by Use of Electronic Computers. Preprint 2318-62. ARS Solid Propellant Rocket Conference, Jan. 1962.

18. O'Brien, James: Propulsion Optimization of a Length Restricted Booster. ARS J., 32, 1962, pp. 1410-1412.

19. Winton, W. R.: A Discussion of the Logic and Compatibilities of a Fully Automated General Missile Sizing Program. Proceedings of the ICRPG Working Group on Design Automation, June 1965, CPIA Publication 92, Sept. 1965, pp. 23-47.

20. Alexander, R. V.: A Survey of Digital Computer Programs Used to Optimize Solid Propellant Rocket Propulsion Systems. Paper presented at the AIAA Second Propulsion Joint Specialists Conference (Colorado Springs, Colo.), June 15, 1966. Aerojet-General Rep. TL7U2702.

21. Anon.: Propulsion System Weight Prediction Methods, General and Solid Rockets. Rep. D2-22311-2, Vol. I (AD442140L) The Boeing Co., Feb. 1964.

22. Kimble, J. E.: Parametric Weight Scaling Equations for Solid Propellant Launch Vehicles. Rep. SSD-TR-66-85 (AD486424) (Aerospace Corporation), Air Force Space Systems Division, Apr. 1966.

23. Achback, W. P.; and Runck, R. J.: An Evaluation of Materials for Rocket Motor Cases Based on Minimum Weight Concepts. Memo DMIC-147, Battelle Memorial Institute, Mar. 1962.

24. Bert, C. W.; and Hyler, W. S.: Advances in Space Science and Technology. Vol. VIII. Academic Press, Inc., 1966, pp. 65-194.

25. Wessel, E. J.; et al.: Engineering Methods for the Design and Selection of Materials Against Fracture. Rep. AD801005 (Westinghouse Research Laboratories), U.S. Army Tank-Automotive Center, June 1966.

26. Anon.: A Review of Engineering Approaches to Design Against Fracture. Subcommittee on Brittle Fracture of the ASME Research Committee on Prevention of Fracture in Metals, Am. Soc. Mech. Engrs., Nov. 1964.

27. Hartbower, C. E.: User's Requirements of Fracture Mechanics. Bulletin of the 20th Interagency Solid Propulsion Meeting, Vol. IV, CPIA Publication 49B, Oct. 1964, pp. 657-662.

28. Anon.: Fracture Toughness Testing and Its Applications. ASTM-STP-381, American Society for Testing and Materials, 1965.

29. Brown, W. F., Jr.; and Srawley, J. E.: Plane Strain Crack Toughness Testing of High Strength Metallic Materials. ASTM-STP-410, American Society for Testing and Materials, 1966.

30. Anon.: Fracture Control of Metallic Pressure Vessels. NASA SP–8040, 1970.

31. Bert, C. W.; Mills, E. J.; and Hyler, W. S.: Mechanical Properties of Aerospace Structural Alloys Under Biaxial-Stress Conditions. Rep. AFML TR-66-229 (AD488304) (Battelle Memorial Institute), Air Force Materials Laboratory, Aug. 1966.

32. Hendron, J. A.: Symposium on Recent Developments in Nondestructive Testing of Missiles and Rockets. ASTM Special Technical Publication No. 350, 1963, pp. 95-105.

33. Srawley, J. E.; and Esgar, J. B.: Investigation of Hydrotest Failure of Thiokol Chemical Corporation 260-Inch-Diameter SL-1 Motor Case. NASA TM-X-1194, Jan. 1966.

34. Randall, P. N.; and Felgar, R. P.: Part Through Crack Test-Relation to Solid Propellant Rocket Cases. ASME Transaction, Journal of Basic Engineering, vol. 86, Dec. 1964, pp. 685-692.

35. Babecki, A. J.; Grimsley, J. D.; and Frankel, H. E.: Some Failure Problems in Spacecraft and Spaceboosters. NASA TM-X-55067, 1966.

36. Various Authors: Titanium–1966, Lectures Given at a Norair Symposium, Mar. 1966. DMIC Memo 215, Battelle Memorial Institute, Sept. 1966.

*37. Anon.: Structural Design Criteria for Large Solid Motors. AFSSD Exhibit 61-72, Dec. 1961.

38. Uhlig, Herbert H.: The Corrosion Handbook. John Wiley & Sons, 1948.

39. Shreir, L. L.: Corrosion. John Wiley & Sons, 1963.
Volume I–Corrosion of Metals and Alloys.
Volume II–Corrosion Control.

40. Goetzel, C. G.; Rittenhouse, J. B.; and Singletary, J. B.: Space Materials Handbook. Rep. ML-TDR-64-40 (Lockheed Missiles & Space Co.), Air Force Materials Laboratory, Mar. 1964.

41. Anon.: Protective Finishing Systems for Rockets, Guided Missiles, Support Equipment and Related Materials. Military Standard, MIL-STD-186, Mar. 1964.

*Dossier for Design Criteria Monograph on Solid Rocket Motor Metal Cases. (Unpublished) 1968. Collected source material available for inspection at NASA Lewis Research Center, Cleveland, Ohio.

42. Logan, Hugh L.: The Stress Corrosion of Metals, Corrosion Monograph Series. John Wiley & Sons (National Bureau of Standards), 1966.

43. Brown, B. F.: A New Stress Corrosion Cracking Test for High-Strength Alloys. Material Research Standard, vol. 6, no. 3, Mar. 1966, pp. 129-133.

44. Johnson, Herbert H.; and Paris, Paul C.: Sub-Critical Flaw Growth. Engineering Fracture Mechanics, vol. 1, no. 1, June 1968, pp. 3-45.

45. Slunder, C. J.; and Boyd, W. K.: Environmental and Metallurgical Factors of Stress-Corrosion Cracking in High-Strength Steels. DMIC Rep. 151, Battelle Memorial Institute, Apr. 1961.

46. Anon.: Meteoroid Environment Model, Near Earth to Lunar Surface (1969). NASA SP-8013, 1969.

47. McMillan, A. R.: Experimental Investigations of Simulated Meteoroid Damage to Various Spacecraft Structures. NASA CR-915, 1968.

48. Anon.: Space Craft Sterilization Technologies. NASA SP-108, 1966.

49. Kirschner, T.; and Andrews, W. G.: Design Study of Heat Sterilizable Solid Rocket Motors for Space Application. Rep. E 15-66, Vol. I, Thiokol Chemical Corp., June 1966.

50. Rydelek, R. F.; and Landis, A. L.: Study of the Effects of Ethylene Oxide and Freon 12 Upon Properties of Polymers and Metallic Surfaces. Jet Propulsion Laboratory, NASA Contract NAS7-100 (Hughes Aircraft Co.), 1966.

51. Anon.: Aerospace Structural Metals Handbook. Vol. I, Ferrous Alloys. Rep. ASD-TDR-63-741 (Syracuse University), Air Force Materials Laboratory, Mar. 1967.

52. Anon.: Aerospace Structural Metals Handbook. Vol. II, Non-Ferrous Light Metal Alloys. Rep. ASD-TDR-63-741 (Syracuse University), Air Force Materials Laboratory, Mar. 1967.

53. Anon.: Metals Handbook. Vol. I. Eighth Ed., American Society for Metals, 1961.

54. Anon.: ASME Handbook–Metals Engineering–Design. Second ed., McGraw-Hill Book Co., 1965.

55. Anon.: Metallic Materials and Elements for Aerospace Vehicle Structures. Department of Defense Military Handbook, MIL-HDBK-5. MIL HDBK-5A, Change Notice No. 3, Dec. 1968.

56. Groeneveld, T. P.; Elsea, R. A.; and Hall, A. M.: The 9Ni-4Co Steels. DMIC Memo 220, Battelle Memorial Institute, Oct. 1966.

57. Tiffany, C. F.; Masters, J. N.; and Regan, R. E.: A Study of Weldments and Pressure Vessels Made of HY-150 Steel Plates. NASA CR-72155, 1967.

58. Campbell, J. E.; Barone, F. J.; and Moon, D. P.: The Mechanical Properties of the 18 Percent Nickel Maraging Steels. DMIC Rep. 198, Battelle Memorial Institute, Feb. 1964.

59. Anon.; Evaluation of High Nickel Steel for Application in Large Booster Meteor Fabrication. Rep. ML-TDR-64-115 (Aerojet-General Corp.), Air Force Materials Laboratory, Apr. 1964.

60. Anon.: 260-inch-diameter Motor Feasibility Demonstration Program; Volume IV: 260-SL Motor Chamber and Nozzle Shell Fabrication of 18 Percent-Nickel Maraging Steel; Appendix B: Material and Process Evaluation Program. NASA CR-72126, 1966.

61. Anon.: Large Motor Case Technology Evaluation, First Year Summary Progress Report. Vol. I. Air Force Materials Laboratory, Contract AF 33(615)-1623 (The Boeing Co.), June 1965.

62. McClaren, S. W.; and Best, J. H.: Low Cycle Fatigue Design Data on Materials in a Multi-Axial Stress Field. Rep. RTD-TDR-63-4094 (LTV Vought Aeronautics), Air Force Materials Laboratory, Nov. 1963.

63. Anon.: Aircraft Designers Handbook for Titanium and Titanium Alloys. Rep. AFML-TR-67-142, Battelle Memorial Institute, Air Force Materials Laboratory, Mar. 1967.

64. Babel, H. W.; and Kam, C. Y.: Textured Titanium in Design. AIAA/ASME Seventh Structures and Materials Conference, Am. Inst. Aeron. and Astron. (Cocoa Beach, Fla.), Apr. 1966, pp. 71-75.

65. Abraham, Lewis H.: Structural Design of Missiles and Spacecraft. McGraw-Hill Book Co., Inc., 1962.

66. Anon.: Handbook of Instructions for Missile and Space Vehicle Design, Vols. I and II. Rep. AFSCM-80-8, Air Force Systems Command, June 1967.

67. Kuger, P.: Prediction of Design Reliability of Very Large Solid Rocket Motors. J. Spacecraft Rockets, vol. 1, no. 2, Mar.-Apr. 1964, pp. 139-142.

68. Broding, W. C.; Diederich, F. W.; and Parker, P. S.: Structural Optimization and Design Based on a Reliability of Design Criterion. J. Spacecraft Rockets, vol. 1, no. 1, Jan. 1964, pp. 56-61.

69. Bert, C. W.: Ellipsoidal Closures for Minimum-Weight Pressure Vessels. Can. Aeron. Space Journal, vol. 9, no. 5, May 1963, pp. 133-136.

70. Hoffman, G. A.: Optimal Proportions of Pressure Vessel Heads. J. Aerospace Sci., vol. 29, no. 12, Dec. 1962, pp. 1471-1475.

71. Reed, W. S.: Cassinian Domes for Pressure Vessel Design. Trans. ASME, Journal of Engineering for Industry, vol. 85, no. 1, Feb. 1963, pp. 119-122.

72. Felix, B. R.; Wade, G. L.; and Tyson, M. R.: Engineering Problems of Large Clustered Solid Propellant Boosters. Society of Automotive Engineers, National Aeronautic Meeting, no. 510B, Apr. 1962.

73. Anon.: Study of Cluster Structure and Thrust Vector Control. Rep. D2-22002, The Boeing Co. (Contract AF 04(611)8186), Aug. 1962.

74. Love, A. E. H.: On the Small Free Vibrations and Deformations of Thin Elastic shells. Phil. Trans. Roy. Soc., 179A, 1888.

75. Love, A. E. H.: A Treatise on the Mechanical Theory of Elasticity. Fourth ed., Dover Publications, 1927.

76. Timoshenko, S.; and Woinowsky-Kreiger, S.: Theory of Plates and Shells. Second ed., McGraw-Hill Book Co., Inc., 1959.

77. Barzelay, Arthur R.; et al: Structural Analysis for Design of Lightweight Rocket Shells. Bulletin of the Ninth Meeting of the Joint Army-Navy-Air Force Solid Propellant Group. Vol. I, Propellant Research and Development, May 1953, pp. 117-154.

78. Roark, Raymond, J.: Formulas for Stress and Strain. Fourth ed., McGraw-Hill Book Co., Inc., 1965.

79. Klasner, Jerome M.; and Levine, Howard S.: Further Comparison of Elasticity and Shell Theory Solutions. Am. Inst. Aeron. Astron. Journal, vol. 4, no. 3, Mar. 1966, pp. 467-480.

80. Kraus, H.: A Comparison of Measured and Calculated Stresses in Pressure Vessels. Paper No. 66-Wa/PVP-5, ASME, Nov. 27-Dec. 1, 1966.

81. Kraus, H.: A Review and Evaluation of Computer Programs for the Analysis of Stresses in Pressure Vessels. Bull. No. 108, Welding Research Council, Sept. 1965.

82. Armen, H. Jr.: Isakson, G.; and Pifko, A.: Discrete Element Methods for the Plastic Analysis of Structures Subjected to Cyclic Loading. AIAA/ASME 8th Structures, Structural Dynamics and Materials Conference, Mar. 1967, pp. 148-161.

83. Marcal, Pedro V.: A Comparative Study of Numerical Methods of Elastic-Plastic Analysis. AIAA/ASME 8th Structures, Structural Dynamics and Materials Conference, Mar. 1967, pp. 212-216.

84. Hetenyi, M.: Beams on Elastic Foundation. Univ. of Michigan Press, 1946.

85. Bijlaard, P. P.: Computation of the Stresses from Local Loads in Spherical Pressure Vessels or Pressure Vessel Heads. Welding Research Council Bull. no. 34, Mar. 1957.

86. Bijlaard, P. P.: Additional Data on Stresses in Cylindrical Shells Under Local Loading. Welding Research Council Bull. no. 50, May 1959.

87. Wignot, J. E.; Combs, Henry; and Enstud, A. F.: Discussion of Physical Concepts—Effect of Ring Flexibility on Shear-Flow Pattern. NACA TN 929, May 1944.

88. Herrmann, L. R.; and Campbell, D. M.: A Finite Element Analysis for Thin Shells. Technical Memo 6LR0, Aerojet-General Corp., July 1967.

89. Baker, W. E.: Analysis of Circular, Shell Supported Ring Loaded With Internal Pressure and Co-Planar Asymmetrical External Loads. Advanced Systems Memo 64-4, Rocketdyne Div., North American Rockwell Corp., April 24, 1964.

90. Harris, T. A.: Strain Gage Analysis for Advanced SPARROW Motor Case. Report DDM EA-67-04, Rocketdyne Div., North American Rockwell Corp., July 21, 1967.

91. Wilson, E. L.: Finite Element Analysis of Two-Dimensional Structures. Report No. 63-2, Structures and Materials Research, Dept. of Civil Engineering, Univ. of California, Berkeley, Calif., June 1963.

92. Becker, E. B.; and Brisbane, J. J.: Application of the Finite Element Method to Stress Analysis of Solid Propellant Rocket Grains. AD476735, Report No. S-76, vol. II, part 2, Rohm & Haas Co., Jan. 1966.

93. Sechler, E. E.: Stress Rise Due to Offset Welds in Tension. Rep. TR-59-0000-00774, Space Technology Laboratories, Inc., Aug. 1959.

94. Johns, Robert H.: Theoretical Elastic Mismatch Stresses. NASA TN D-3254, 1966.

95. Tiffany, C. F.; Masters, J. N.; and Regan, R. E.: Large Motor Case Technology Evaluation. Rep. AFML-TR-67-190 (The Boeing Co.), Air Force Materials Laboratory, Aug. 1967.

96. Gerard, George; and Becker, Herbert: Handbook of Structural Stability, Part III–Buckling of Curved Plates and Shells. NASA TN 3783, 1957.

97. Gerard, George: Handbook of Structural Stability, Supplement to Part III–Buckling of Curved Plates and Shells. NASA TN D-163, 1959.

98. Timoshenko, S.: Theory of Elastic Stability. Second ed., McGraw-Hill Book Co., Inc., 1961.

99. Anon.: Collected Papers on Instability of Shell Structures. NASA TN D-1510, 1962.

100. Anon.: Buckling of Thin-Walled Circular Cylinders. NASA SP-8007, revised, 1968.

101. Schumacher, J. G.; and Lincoln, B.: Development of Design Curves for the Stability of Thin Pressurized and Unpressurized Circular Cylinders. Rep. AZS-27-275, Convair Astronautics Div., General Dynamics Corp., May 1959.

102. Brush, D. O.; and Field, F. A.: Buckling of a Cylindrical Shell Under a Circumferential Band Load. J. Aerospace Sci., vol. 26, no. 12, Dec. 1959, pp. 825-830.

103. Seide, Paul: The Stability Under Axial Compression and Lateral Pressure of a Circular-Cylindrical Shell with an Elastic Core. Rep. STL/TR-60-0000-09033, Space Technology Laboratories, Inc., Mar. 1960.

104. Brush, D. O.; and Almroth, B. O.: Buckling of Core-Stabilized Cylinders Under Axisymmetric External Loads. J. Aerospace Sci., vol. 29, no. 10, Oct. 1962, pp. 1164-1170.

105. Weingarten, V. I.: Stability Under Torsion of Circular Cylindrical Shells with an Elastic Core. J. Am. Rocket Soc., vol. 32, no. 4, Apr. 1962, pp. 637-639.

106. Coale, C. W.; et al.: Development of Improved Structural Dynamic Analysis. Vol. I, General Survey. Rep. FDL-TR-66-187 (AD 645461) (Lockheed Missiles & Space Co.), Air Force Dynamics Laboratory, 1966.

107. Baltrukonis, J. H.: A Survey of Structural Dynamics of Solid Propellant Rocket Motors. NASA CR-658, 1966.

108. Depkovich, T.; and Peterson, L.: Dynamic Analysis of Minuteman Wing VI Second Stage Motor 52TH-1. Rep. TR-4640:64-023, Aerojet-General Corp., 1964.

109. Depkovich, T. E.; and Croxton, D. S.: Dynamic Analysis of the Hughes HS-303A Apogee Motor. Rep. 8608-01-SP-1, Aerojet-General Corp., 1965.

110. Depkovich, T. E.; and Peterson, L. Direct Analog Dynamic Analysis of Minuteman Second Stage Motors. Technical Memo 208SRP, Aerojet-General Corp., 1963.

111. Loewy, R. G.; and Joglekar, M. M.: Matrix Holzer Analysis for Fully-Coupled Vibrations of Clustered Launch-Vehicle Configurations Including Applications to the Titan III-C and Uncoupled Saturn I Cases. NASA CR-592, 1966.

112. Duty, J. P.: A Study to Determine the Effects of Clustering of Solid Engines on Structural Vibration Levels. NASA CR-68433, 1965.

113. Keith, J. S.; et al.: Methods in Structural Dynamics for Thin Shell Clustered Launch Vehicles. Rep. FDL-TDR-64-105 (Ling-Temco-Vought), Air Force Flight Dynamics Laboratory, 1965.

114. Hurty, W. C.: Dynamic Analysis of Structural Systems Using Component Modes. AIAA J. Aerospace Sci., vol. 3, no. 4, Apr. 1965, pp. 678-685.

115. Clingan, B. E.; Gates, R. M.; and Andrews, J. S.: Dynamic Loads During Boosted Flight. Rep. ASD-TDR-63-302 (AD405020) (The Boeing Co.), Air Force Aeronautical Systems Division, 1963.

116. Keith, J. S.; Lincoln, J. W.; and Trainower, G.: Aeroelastic Analysis of Multistage Rocket Systems. NATO, AGARD Rep. 390 (AD 287926), 1961.

117. Anon.: Space Vehicle Design Criteria: Buffeting During Launch and Exit. NASA SP-8001, May 1964.

*118. Anon.: WS-133B Environmental Design Criteria, Minuteman. Air Force Ballistic Systems Division, Exhibit 62-51, Revision 6, June 1965.

119. Lyon, R. H.: Random Noise and Vibration in Space Vehicles. Shock and Vibration Information Center, U. S. Department of Defense, no. SVM-1, Library of Congress Card No. 67-62274, (Bolt Beranek and Newman, Inc.), 1967.

*Dossier for Design Criteria Monograph on Solid Rocket Motor Metal Cases. (Unpublished) 1968. Collected source material available for inspection at NASA Lewis Research Center, Cleveland, Ohio.

120. Wright, James W. Jr.; and Crownover, William S.: Materials and Fabrication Techniques for Army S lid Propellant Rocket Motor Cases. Rep. RK-TR-66-7 (AD 480986L), U. S. Army Missile Command, Redstone Arsenal, Jan. 1966.

121. Kammer, P. A.; and Martin, D. C.: Welding High-Strength Steels. DMIC Rep. 229, Battelle Memorial Institute, July 1966.

122. Anon.: Federal Test Method Standard–Metals; Test Methods. Federal Test Method STD No. 151B.

123. Smiley, R. W., Cdr., USN: Service Correlation–The Key to Successful Nondestructive Testing. Mater. Res. Std., vol. 6, no. 3, Mar. 1966.

124. McGonnagle, Warren J.: Nondestructive Testing. Second ed., Gordon and Breach, 1966.

125. Anon.: Large Motor Case Engineering Optimization Study. NASA CR-77132, 1965.

126. ASTM Special Committee on Fracture Testing of High Strength Materials: Progress in Measuring Fracture Toughness and Using Fracture Mechanics. Fifth Report of the Special ASTM Committee. Mater. Res. Std., vol. 4, no. 3, Mar. 1964.

127. Tiffany, C. F.; and Pall, F. A.: An Approach to the Prediction of Pressure Vessel Minimum Fatigue Life Based Upon Applied Fracture Mechanics. Rep. D2-22437, The Boeing Co., 1963.

128. Anon.: Preservation, Methods of. Military Specification MIL-P-116, Amend. no. 3, Sept. 1967.

129. Anon.: Finishes and Coatings: General Specification for Protection of Aerospace Weapons Systems, Structure and Parts. Military Specification MIL-F-7179, Sept. 1965.

130. Anon.: Hydraulic Fluid, Petroleum Base for Preservation and Testing. Military Specification MIL-H-6083, Rev. C, Amend. no. 2, June 1969.

131. Anon.: Lubricating Oil, Internal-Combustion Engine, Preservative. Military Specification MIL-L-21260, Sept. 1961.

132. Anon.: Lubricating Oil, General Purpose, Low Temperature. Military Specification MIL-L-7870, Rev. A, Sept. 1961.

133. Anon.: Corrosive Compound, Solvent Cutback, Cold-Application. Military Specification MIL-C-16173, Rev. D, Amend. no. 2, Mar. 1969.

134. Anon.: Barrier Material, Greaseproofed, Waterproofed, Flexible. Military Specification MIL-B-121 Rev. D, Mar. 1969.

135. Anon.: Bags, Sleeves and Tubing, Interior Packaging. Military Specification MIL-B-117, Rev. D, June 1967.

136. Anon.: Coating Compound, Strippable, Sprayable. Military Specification MIL-C-16555, Rev. C. Amend. no. 1, July 1962.

137. Anon.: Desiccants, Activated, Bagged, Packaging Use and Static Dehumidification. Military Specification MIL-D-3464, Rev. D, May 1966.

138. Anon.: Primer: Corrosion-Inhibiting, Low Moisture Sensitivity for Aircraft Use. Military Specification MIL-P-8585, Rev. A, Amend. no. 1, Feb. 1968.

139. Anon.: Primer Coating, Epoxy-Polyamide, Chemical and Solvent Resistant. Military Specification MIL-P-2337, Rev. B, Dec. 1966.

140. Anon.: Lacquer, Cellulose Nitrate, Glass, for Aircraft Use. TT-L-32, Amend. no. 13, Dec. 1966.

141. Anon.: Coating, Polyurethane, for Aircraft Application. Military Specification MIL-C-27227, Rev. A, Amend. no. 1, May 1966.

142. Anon.: Metals, Definition of Dissimilar. Military Standard MS 33586, Rev. A, Dec. 1968.

143. Anon.: Primer Coating, Epoxy. Military Specification MIL-P-52192, Rev. A, Mar. 1967.

144. Anon.: Primer, Paint, Vinyl Zinc Chromate Type, Formula No. 120. Military Specification MIL-P-15930, Rev. B, Amend. no. 1, Aug. 1967.

145. Jackson, J. D.; and Boyd, W. K.: Corrosion of Titanium. DMIC Memo 218, Battelle Memorial Institute, Sept. 1, 1966.

146. Plumley, A. G.; and Levinsky, C. T.: Calculation of Interstage Pressure During Staging of Minuteman Missile. Rep. TM-185-SRP, Aerojet-General Corp., Apr. 1962.

147. Salmi, Reino J.: Compressed-Air Model Investigation of Solid Rocket Overpressures Due to Interference from Aft-End Ignition Rocket. NASA TN D-3537, 1966.

148. Anon.: Space Vehicle Design Criteria, Prelaunch Ground Wind Loads. NASA SP-8008, 1965.

*149. Anon.: Analysis and Design of Modern Pressure Vessels. (Unpublished), 1963.

150. Anon.: Environmental Test Methods. Military Standard MIL-STD-810, June 1967.

*Dossier for Design Criteria Monograph on Solid Rocket Motor Metal Cases. (Unpublished) 1968. Collected source material available for inspection at NASA Lewis Research Center, Cleveland, Ohio.

NASA SPACE VEHICLE DESIGN CRITERIA DOCUMENTS ISSUED TO DATE

SP-8001 (Structures)	Buffeting During Launch and Exit, May 1964
SP-8002 (Structures)	Flight-Loads Measurements During Launch and Exit, December 1964
SP-8003 (Structures)	Flutter, Buzz, and Divergence, July 1964
SP-8004 (Structures)	Panel Flutter, May 1965
SP-8005 (Environment)	Solar Electromagnetic Radiation, June 1965
SP-8006 (Structures)	Local Steady Aerodynamic Loads During Launch and Exit, May 1965
SP-8007 (Structures)	Buckling of Thin-Walled Circular Cylinders, revised August 1968
SP-8008 (Structures)	Prelaunch Ground Wind Loads, November 1965
SP-8009 (Structures)	Propellant Slosh Loads, August 1968
SP-8010 (Environment)	Models of Mars Atmosphere (1967), May 1968
SP-8011 (Environment)	Models of Venus Atmoshpere (1968), December 1968
SP-8012 (Structures)	Natural Vibration Modal Analysis, September 1968
SP-8013 (Environment)	Meteoroid Environment Model–1969 (Near Earth to Lunar Surface), March 1969
SP-8014 (Structures)	Entry Thermal Protection, August 1968
SP-8015 (Guidance and Control)	Guidance and Navigation for Entry Vehicles, November 1968
SP-8016 (Guidance and Control)	Effects of Structural Flexibility on Spacecraft Control Systems, April 1969
SP-8017 (Environment	Magnetic Fields–Earth and Extraterrestrial, March 1969
SP-8018 (Guidance and Control)	Spacecraft Magnetic Torques, March 1969

SP-8019 (Structures)	Buckling of Thin-Walled Truncated Cones, September 1968
SP-8020 (Environment)	Mars Surface Models (1969), May 1969
SP-8021 (Environment)	Models of Earth's Atmosphere (120 to 1000 km), May 1969
SP-8023 (Environment)	Lunar Surface Models, May 1969
SP-8024 (Guidance and Control)	Spacecraft Gravitational Torques, May 1969
SP-8028 (Guidance and Control)	Entry Vehicle Control, November 1969
SP-8029 (Structures)	Aerodynamic and Rocket-Exhaust Heating During Launch and Ascent, May 1969
SP-8031 (Structures)	Slosh Suppression, May 1969
SP-8032 (Structures)	Buckling of Thin-Walled Doubly Curved Shells, August 1969

NASA-Langley, 1970 —— 31