NASA
SPACE VEHICLE
DESIGN CRITERIA
(GUIDANCE AND CONTROL)

NASA SP- 8036

EFFECTS OF STRUCTURAL FLEXIBILITY ON LAUNCH VEHICLE CONTROL SYSTEMS

MSFC LIBRARY

FEBRUARY 1970

NATIONAL AERONAUTICS AND SPACE ADMINISTRATION

FOREWORD

NASA experience has indicated a need for uniform design criteria for space vehicles. Accordingly, criteria are being developed in the following areas of technology:

Environment
Structures
Guidance and Control
Chemical Propulsion

Individual components of this work will be issued as separate monographs as soon as they are completed. This document, Effects of Structural Flexibility on Launch Vehicle Control Systems, is one such monograph. All previous monographs in this series are listed on the last page of this document.

These monographs are to be regarded as guides to design and not as NASA requirements, except as may be specified in formal project specifications. It is expected, however, that the criteria sections of these documents, revised as experience may indicate to be desirable, eventually will become uniformly applied to the design of NASA space vehicles.

This monograph was prepared under the cognizance of the NASA Electronics Research Center. Principal contributors were R. B. Noll and J. Zvara of Kaman AviDyne and Dr. J. J. Deyst of the Massachusetts Institute of Technology.

The effort was guided by an advisory panel chaired by Prof. H. Ashley of Stanford University. The following individuals participated in advisory panel activities:

W. W. Anderson	NASA, Langley Research Center
R. F. Bohling	NASA, Office of Advanced Research and Technology
W. D. Clarke	NASA, Marshall Space Flight Center
E. S. Criscione	Kaman AviDyne
D. C. Cunningham	Sperry, Flight Systems Division
M. Dublin	General Dynamics/Convair
R. J. Farrell	Martin Marietta, Denver
R. L. Goldman	Martin Marietta, RIAS
M. Gordoa, Jr.	Chrysler, Space Division
B. M. Hall	McDonnell Douglas, Western Division
G. W. Jones	NASA, Langley Research Center
A. Lazarus	Aerospace Corporation
L. D. McTigue	Boeing, Huntsville
G. B. Skelton	Honeywell, Minneapolis
C. H. Spenny	NASA, Electronics Research Center
R. L. Swaim	Purdue University
D. C. Wade	NASA, Manned Spacecraft Center
C. R. Wells	Chrysler, Space Division

CONTENTS

Page

1. INTRODUCTION 1

2. STATE OF THE ART 2

2.1 The Problem 2
2.2 The Design Process 3
2.3 Review of Design and Flight Experience 6

2.3.1 Structural Feedback Problems 6

2.3.1.1 Vehicle Body Deformation 6
2.3.1.2 Local Deformation 11

2.3.2 Transient Response Problems 17
2.3.3 Environmental Problems 18
2.3.4 Other Predicted Phenomena 20

3. CRITERIA 21

3.1 Design Verification 23

3.1.1 Analytical Studies 23
3.1.2 Simulation Studies 23
3.1.3 Tests 23

4. RECOMMENDED PRACTICES 23

4.1 Analytical Studies 24

4.1.1 Structural Modeling 24
4.1.2 Control System Design 26

4.2 Structural Feedback System Simulation 29
4.3 Tests 30

4.4 Specific Recommended Practices 31

4.4.1 Structural Feedback Problems 32

4.4.1.1 Vehicle Body Deformation 32
4.4.1.2 Local Deformation 33

4.4.2 Transient Response Problems 35
4.4.3 Environmental Problems 35
4.4.4 Other Predicted Phenomena 36

REFERENCES 39

NASA Space Vehicle Design Criteria Monographs Issued to Date 47

EFFECTS OF STRUCTURAL FLEXIBILITY ON LAUNCH VEHICLE CONTROL SYSTEMS

1. INTRODUCTION

Experience with launch vehicle control systems shows that to achieve a satisfactory design the structural flexibility of the vehicle must be considered. The flexible structure can be excited by forces acting on the vehicle with the resulting deformations giving rise to control system sensor inputs. Thus the structure is an integral part of the control loop. If the deformation inputs (referred to herein as structural feedback) are ignored or improperly considered, the space vehicle may not be properly controlled and, in many instances, the vehicle can exhibit self-excited divergent oscillations that may be destructive. *Thus, the control system designer must be aware of the numerous ways in which structural feedback can occur and must ensure that the effects of feedback phenomena are properly considered.*

Launch vehicle control systems to date have been designed by means of frequency domain analytical techniques–supplemented by extensive simulation studies, component tests, system tests, and when necessary, flight tests. Problems arising from the dynamic interaction of the control system with the flexible structure are influenced by sensor location, local structural flexibility, and structural mode shapes, frequencies, and damping characteristics. If an adverse structural flexibility interaction with the control system is predicted, an attempt is made to ameliorate the interaction by modifying the control system (e.g., by changing filter networks or relocating sensors). If these modifications fail to resolve the interaction problem, structural redesign to decrease the interaction may be necessary.

Important factors affecting the design of the control system are

- Transient conditions

  thrust transients
  liftoff and staging transients
  engine failure
  switchover to redundant control system
  slingshot effect

- Environmental conditions

  noise
  buffet
  winds
  Pogo
  panel flutter

- Other considerations

  sample intervals and quantization increments (digital systems)
  spin resonance
  "garden-hose" effect
  pilot-in-the-loop

The control system design is also affected by trajectory constraints (mission-connected constraints), e.g., drift rate, launch and exit window, and propellant management.

This monograph is concerned with control during the boost phase; significant flexibility may exist in the launch vehicle only or in the entire space vehicle—which term comprises both the boost stages and the spacecraft. All significant aspects of space vehicle structural feedback on the control system are considered. This monograph complements NASA SP-8016, *Effects of Structural Flexibility on Spacecraft Control Systems* (ref. 1) which discusses how structural flexibility affects the design of control systems of vehicles operating in space.

2. STATE OF THE ART

2.1 The Problem

The primary function of the launch vehicle control system is to direct the flexible vehicle to a desired set of end conditions, without violating an extensive set of operational requirements or constraints. Physically, the control system must process data from sensors to provide command signals to engine or control surface actuators. The sensors measure angular or translational motion; their outputs indicate the gross (rigid-body) motion of the vehicle plus motion caused by structural deformations at the locations of the sensors. These deformations affect the command signals to the control effectors, usually gimballed engines or control surfaces. Since the effectors apply forces to the structure, energy can be fed into the structure at various frequencies, including those where resonant oscillations may be excited. Because structural damping is small, it is possible for the effectors to add energy faster than it is dissipated. The ensuing structural deflections may be excessive, and structural failure can result.

To avert this situation, the control system must process the sensor signals so that there is a net flow of energy out of the structure. This can be accomplished in two ways. First, the control system may block or filter sensor signals at resonant structural frequencies, thereby preventing the effectors from supplying energy at those frequencies. This method, called gain stabilization, depends upon structural damping for net energy removal and is used to avoid excessive response in high frequency modes. The control system must perform its primary task of controlling the gross motion of the vehicle, and to do so effectively it must

supply energy in a band of frequencies determined by control and/or guidance requirements. In general one or more of the lowest frequency modes are not sufficiently separated from this band to permit gain stabilization. The alternative, phase stabilization, is to design the controller so that control forces are phased to remove energy from the modes. Most designs employ both methods, with phase stabilization of low frequency modes and gain stabilization of higher frequency modes.

A typical block diagram of the control loop with flexible body dynamics is illustrated in figure 1. The controller processes input commands and feedback signals, and generates outputs to command the effectors. The controller, which may be analog, digital, or hybrid, includes any gain changing programs, compensation systems, and signal conditioning or filtering. Actuators drive the engine gimbals or control surfaces with their own motions controlled by actuator feedback loops. The forces introduced by thrust or control surface deflection affect the vehicle motion and inevitably excite the flexible body modes. The motion of the massive engines or control surfaces also produces inertial forces which can yield undesirable deflections of the support structure, and in turn produce control disturbances. In addition, external influences produce disturbing forces which may excite the modes. Vehicle motion at the location of the sensors is detected by the sensors and fed back to the controller. In addition to the basic structural feedback loop illustrated in figure 1, a number of other interaction paths may cause difficulty. Actuators and engine dynamics may interact with structural deformations. Engine noise and vibration can affect sensor performance. The sensor mounting structure may exhibit undesired responses resulting from local flexibility. Propellant and payloads may also exhibit significant dynamic characteristics and should be included in the determination of the space vehicle structural vibration modes. In addition, boundary-layer noise, and buffet and aeroelastic effects may produce significant inputs to the sensors.

2.2 The Design Process

Control system design necessitates the investigation of the dynamic characteristics of the entire vehicle dynamic system including all significant vibration modes. Generally, vehicle configuration and mission trajectory are defined, and control system requirements are generated therefrom. A number of influences, usually derived from operational considerations, constrain the control system design. For example, the vehicle must clear the launch tower and follow a prespecified trajectory with required accuracy; the control system must tolerate and correct for wind and other aerodynamic disturbances encountered during flight; and engine deflections must be confined within specified limits that are normally less than the mechanical limits. Freedom to select sensor location is usually limited by the physical restrictions imposed by other subsystems. Reliability is most important; and the control system must be capable of completing the mission under certain partial failure conditions. Finally, there are additional characteristics such as simplicity, maintainability, and ease of checkout which must be considered in design tradeoffs.

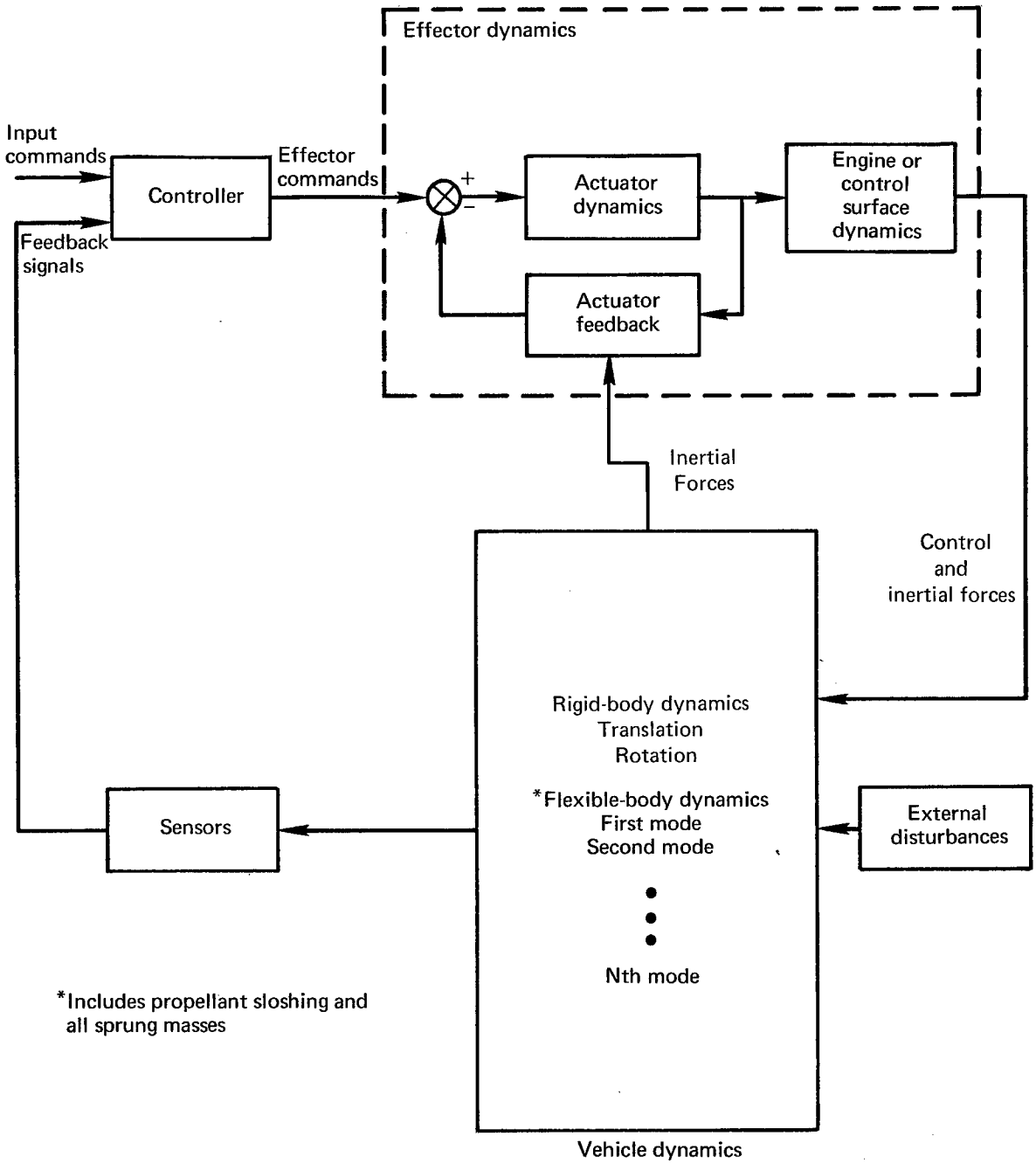

Figure 1.—Block diagram of control loop with flexible body dynamics.

In early design stages previous designs are reviewed to benefit from past experience, and a candidate control system is configured from the rigid-body control requirements. Refinement of the design necessitates the investigation of the flexible vehicle dynamics and usually results in considerable modification to the candidate control system gains derived from the rigid-body analysis. The control loop design with flexible-body dynamics is a nonlinear problem with time-varying coefficients and contemporary analytic methods are inadequate to handle the complete system. Simplifying assumptions must therefore be made to obtain a tractable solution. The structure is modeled as a *finite* parameter system by ignoring high frequency modes (truncating the model). Time-varying parameters are assumed to be constant over small flight-time intervals, and the system is analyzed as a sequence of constant parameter systems (time-slice analysis). The candidate control system is linearized about a set of nominal parameter values and a preliminary stability analysis is conducted to identify basic design requirements such as those modes that must be phase stabilized and whether baffles are needed to suppress slosh modes. Compensation, filtering, and sensor location are chosen as required for stability of the system. Since data on pertinent structure and control system parameter values are seldom known with precision at this time, the design must be such as to tolerate a range of parameter variations.

Improved mathematical models are then developed, which reflect the complexity of the system and the accuracy requirements. These models must account for all significant dynamic phenomena and typically include higher frequency vibration modes, cross-coupling, input data tolerances, flexible internal subsystems, sensor and actuator dynamics, and effects of malfunctions.

Once a system is nominally designed, based on the above considerations, additional requirements such as launch pad stability and control and stability during and after staging are investigated. If the same sensors and signal processors control upper stages throughout the boost, the function of the system during each successive stage must be considered. Alternatively, separate control systems for each stage must be designed, in their entirety, taking account of structural flexibility.

Effects of the highest probability malfunctions are analyzed and simulated to determine if tradeoffs can be made in the nominal design to improve off-nominal performance. A period of comprehensive design confirmation then begins, involving extensive reanalysis, simulation, and tests of the control system and its components. System performance with off-nominal parameter values is examined. Nonlinear effects are studied in detail to determine the character of significant limit cycles. Changes in mission and vehicle configuration are monitored up to launch to determine their effects on performance. Subsequent to launch, flight data are collected, and comparisons are made with detailed simulations to verify the mathematical models.

2.3 Review of Design and Flight Experience

Space vehicle configurations are illustrated in figure 2. Each vehicle shown has been used to launch payloads which vary from the payload configurations shown. Variations in payload and mission requirements often require a significant diversity of control system hardware. Each control system design must be examined for potential difficulties created by changes in vehicle mass and stiffness distribution, as well as flight envelope.

In the past, structural flexibility effects on the control system usually have been anticipated and successfully accounted for by appropriate analysis and design methods. However, those instances when interactions were overlooked are particularly instructive because they reveal the intricate nature of the problem and its costly consequences (ref. 2). Hence, it is useful to review cases of successful initial designs, failures, and design changes to circumvent previous causes of failure.

2.3.1 Structural Feedback Problems

The most common structural feedback problems are those in which either gross vehicle or local body oscillations are reinforced by the control system.

2.3.1.1 Vehicle Body Deformation

Sensor location.—Improper sensor location can result in structural feedback problems. An idealized representation of a beam-like space vehicle deflected in its fundamental bending mode is shown in figure 3. Typically, an angular motion sensor, such as a rate gyro, senses structural pitch deflections. When these deflections are added to rigid-body vehicle pitch deflection, the outcome may be undesirable control action resulting in continued or increased structural deformation. References 3, 4, and 5 illustrate and elaborate on this phenomenon.

One of the earliest encounters with phenomena of this type was with the Vane Test Vehicle Number 4 (VTV-4) illustrated in figure 4. This vehicle was an experimental missile for testing the feasibility of exhaust vane attitude control systems. The control system employed angular displacement and rate gyros to provide feedback information. A command signal to the vane servo was generated from a linear combination of the displacement and rate gyro feedback signals. The vane servo positioned deflection vanes in the rocket exhaust to produce attitude control forces. All control system parameter values were constant during the flight.

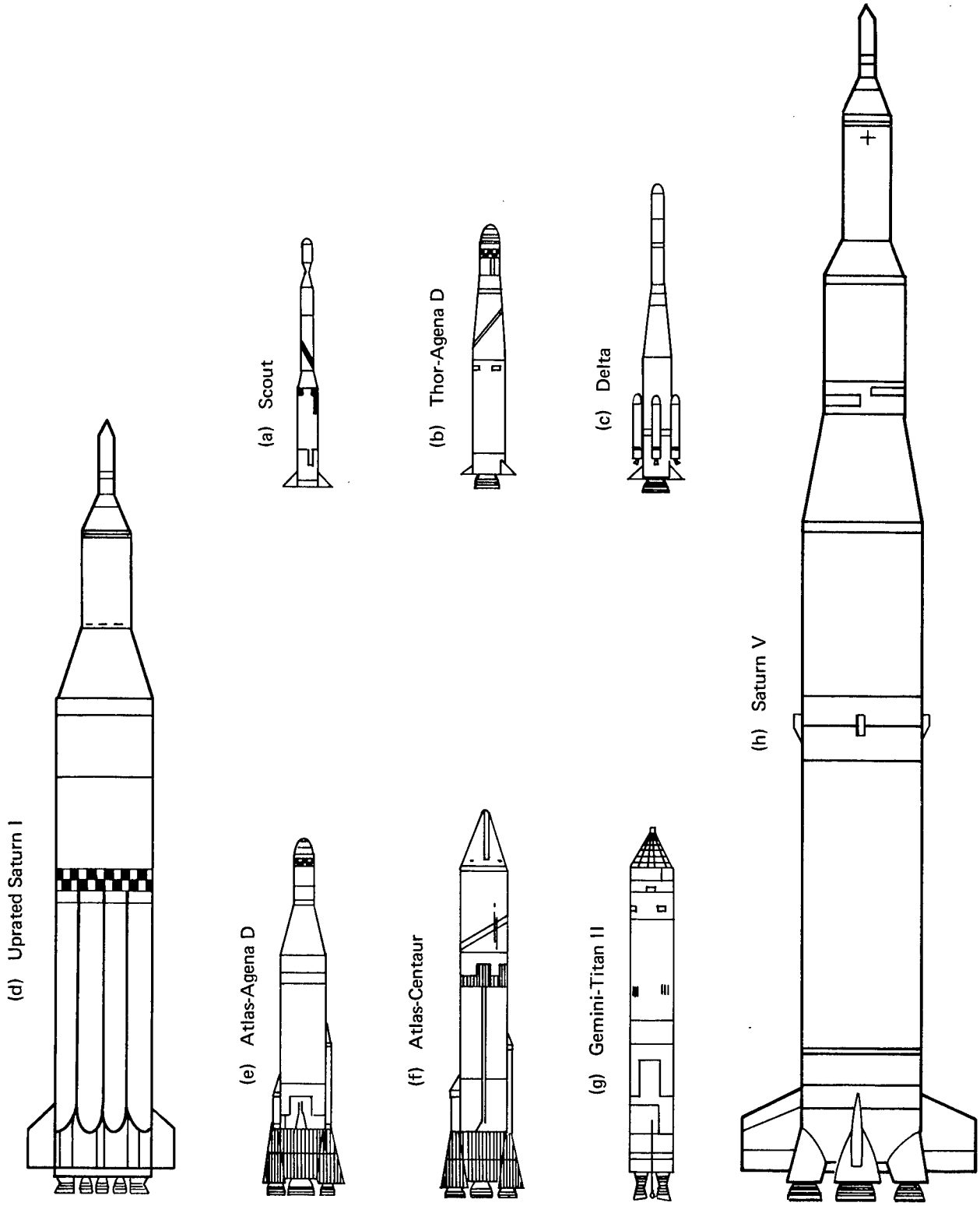

Figure 2.–Illustration of relative size and configuration of space vehicles.

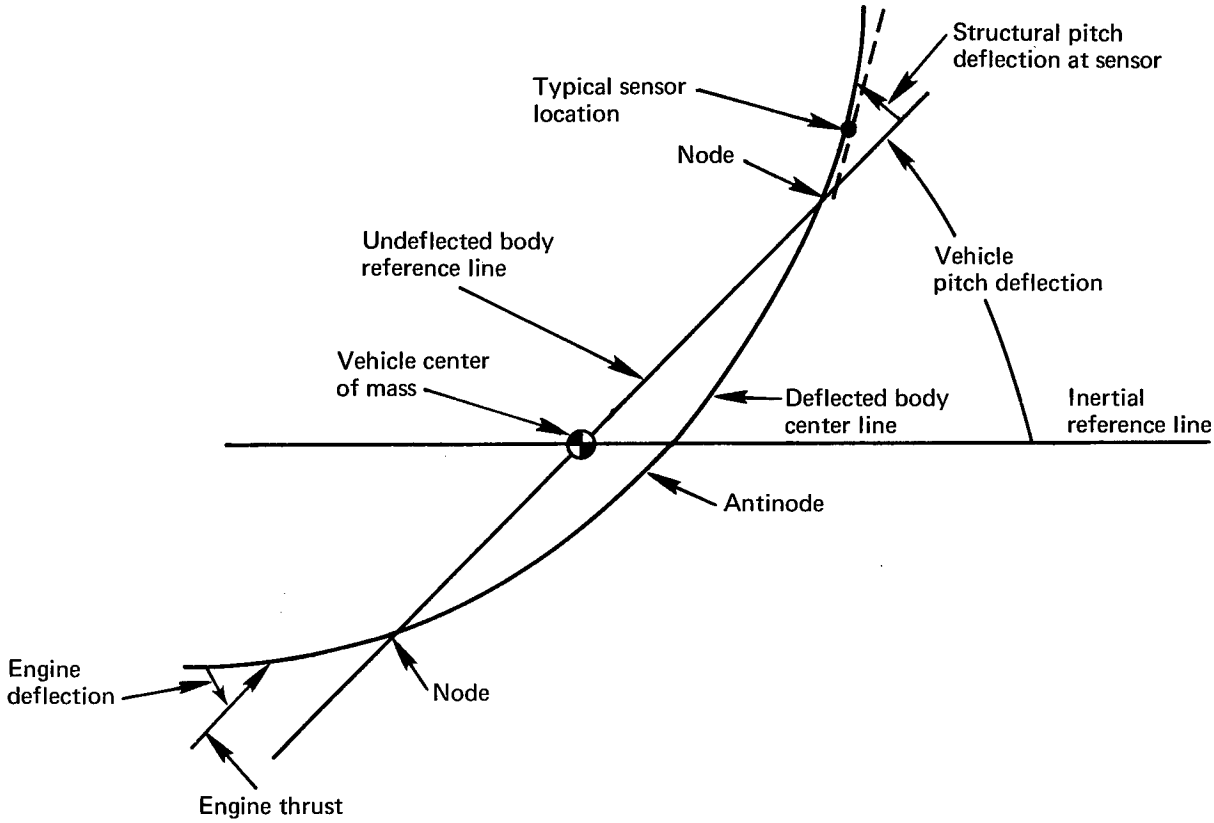

Figure 3.–Idealized launch vehicle bending mode shape.

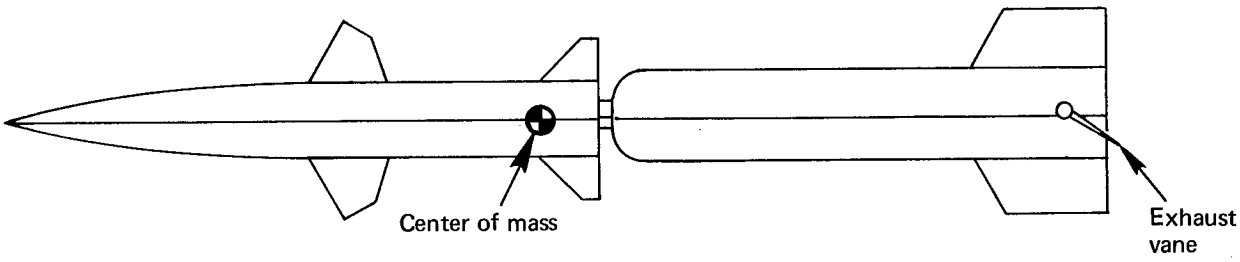

Figure 4.–VTV-4.

Telemetry records of the VTV-4 flight indicated existence of a 10-Hz oscillation, beginning immediately after launch and rapidly increasing until limited by saturation in the servo system. Since the oscillations occurred immediately after launch, aerodynamic forces did not contribute significantly to the oscillation. The severity of the oscillation resulted in the complete destruction of the vehicle. An analytical investigation (ref. 6) indicated that structural feedback involving the vehicle first bending mode caused the unstable oscillation. The analysis proposed that either the gyros be relocated or an electronic compensation network be employed to stabilize the structural feedback control loop.

Vibration mode characteristics.—Improper determination and selection of vibration modes may lead to structural feedback problems. On Atlas/Mercury launch MA-2 (Atlas 67D), a nondestructive control system limit cycle occurred which was caused by structural feedback associated with the seventh vibration mode. The characteristics of this mode had not been accurately predicted because of an uncertainty regarding upper stage fairing flexibility. Electronic filtering, based on modal characteristics determined from flight data, was used to solve the problem (ref. 7).

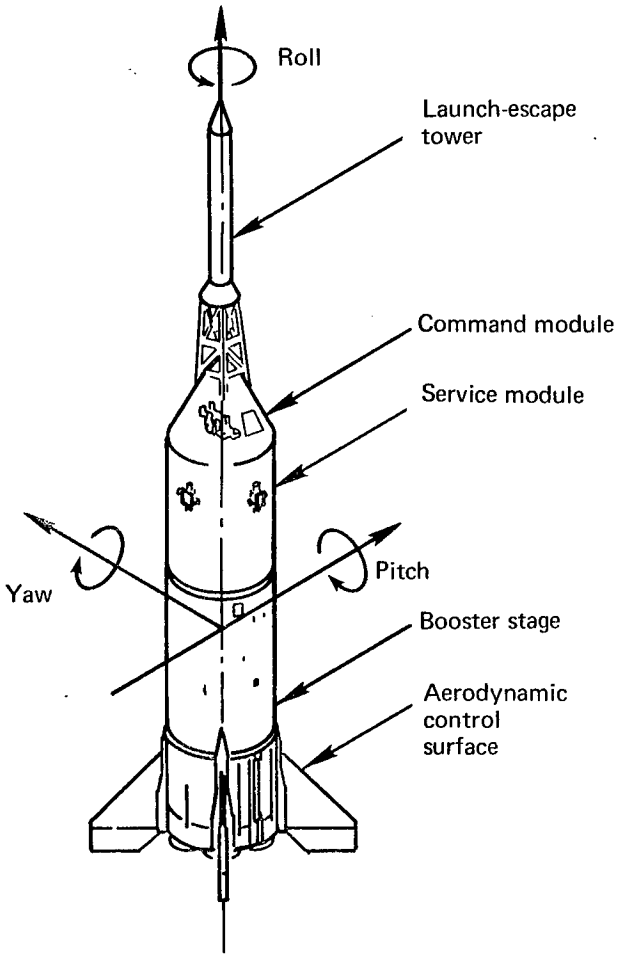

Figure 5.—Little Joe II/Apollo vehicle.

Vehicle design changes result in changes in vibration mode characteristics which must be properly assessed as to their effect on structural feedback. For example, a structural feedback problem occurred during the flight of Little Joe II/Apollo vehicle 12-15-1 (fig. 5). A 3.5-Hz vibration mode oscillation was sensed by the rate gyros, causing excessive elevon motion. The inflight frequency was well below the predicted value of 5.25 Hz for the first vehicle vibration mode. The discrepancy was attributed to incorrect estimates of payload mass distribution used to calculate the first bending mode of the Apollo launch escape tower. Although the oscillation was undamped, its amplitude was not sufficient to affect the mission. To preclude occurrence of the oscillation on subsequent flights, a notch filter which provided attenuation at 3.4 Hz was added to the control system (ref. 8).

It is common practice to establish stability objectives for the control loop with flexible body dynamics. As more precise models evolve during the design process, these objectives may be relaxed if the results of a

more extensive analysis, usually a tolerance analysis, warrant it. For example, the Titan III-C series of launch vehicles, illustrated in figure 6, had a specified requirement that the third and higher modes be gain stabilized by at least 10 dB. The third mode of vehicle C-11 did not meet this requirement. Tolerance analysis indicated no stability problems. The vehicle was flown successfully (ref. 9). Reference 10 presents another example of a noncritical experience with structural interaction on the Titan III-C series—a case involving the proper selection of space vehicle modes.

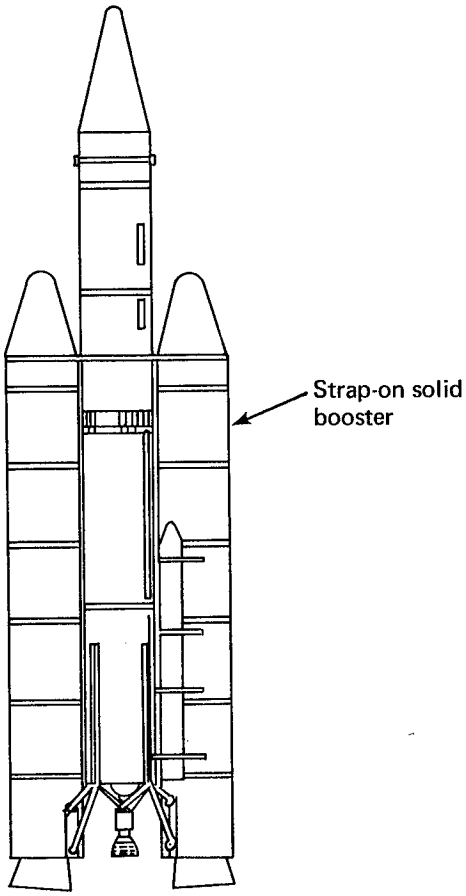

Figure 6.—Titan III-C.

The vibration mode characteristics of a space vehicle before liftoff usually approach those of a structure in cantilever support, with holddown or slow-release mechanisms contributing to the cantilever effect. Since the vibration mode characteristics are substantially different from those of the vehicle during flight, the vehicle may be susceptible to undesirable feedback or control activity before liftoff. During the holddown period of Saturn IB mission SA-203, the vehicle was disturbed by ground winds and the control system gimballed the engines through three oscillation cycles prior to release. The oscillations were very lightly damped and involved feedback between the control system and the flexible vehicle and holddown mechanism. Fortunately, the engine angles at and after liftoff remained within the design envelope (ref. 11).

Propellant slosh.—Propellant sloshing can be a major contributor to system instability. Propellant slosh dynamics are considered in analytical control system design studies by methods such as those presented in references 12 and 13. The most common solution to minimizing the contribution of propellant sloshing to structural feedback instability is to use baffles as a means of augmenting energy dissipation and thereby reducing slosh amplitudes.

The Atlas/Mercury launch MA-2 (Atlas 67D) flight test demonstrated a nondestructive oscillation involving coupling between the control system and a fundamental slosh mode, which was of greater amplitude than tolerable for a manned vehicle. Autopilot gains were changed to suppress the oscillations in subsequent vehicles (refs. 7 and 14).

A propellant slosh-mode interaction with vehicle dynamics was predicted by the control system design analyses for Titan III-C-5. The analyses revealed that the second propellant slosh mode would cause a divergent oscillation at about 80 seconds into the flight and just before release of the strapon solid boosters (see fig. 6). However, simulation studies indicated that the oscillation would not increase in amplitude fast enough to affect control. Postflight examination of telemetry data indicated that no inflight divergent slosh-mode oscillations had occurred.

Aeroelastic effects.—Aerodynamic forces acting on a flexible structure can contribute to aeroelastic phenomena that may affect the control system. Studies using quasi-steady aerodynamics have shown that the aerodynamic forces may couple rigid-body and flexible-body dynamics. The result may be a system whose resonant frequencies undergo substantial and irregular variations along the trajectory, tending sometimes to approach one another rather than to increase uniformly with time as would result from consumption of propellant. A more difficult problem is therefore presented to the control system designer. Phase stabilization of lowest frequency vibration modes may be required in situations where gain stabilization might have been acceptable in the absence of large lifting surface or high flight dynamic pressures (see refs. 15 and 16).

For example, investigations of the control stability of the Titan II with the winged Dyna Soar (X-20) payload indicated that aeroelastic coupling was destabilizing because it lowered the first vibration mode frequency closer to the controlled rigid-body frequency while moving the aerodynamic center of pressure toward the nose (forward of the center of mass). To compensate for these effects, large fins mounted aft on the Titan II were proposed. The aerodynamic loads on the fins increased the first vibration mode frequency and shifted the center of pressure closer to the center of mass, thereby simplifying the control task.

2.3.1.2 Local Deformation

Sensor mounting.—Local structural deformations can produce erroneous sensor signals or sensor saturation which may seriously affect control system operation. Such difficulties were experienced during four launches of the Thor-Agena A vehicle, whose first stage had a gimballed engine (ref. 17). A 5-Hz oscillation occured during first stage flight and might have destroyed the vehicles if capacity limitations in the hydraulic system had not caused engine-actuator saturation and prevented the oscillations from becoming destructive. Flight data indicated that the oscillations occured only in the yaw plane and at the predicted first vibration mode frequency. The telemetered flight data showed that the yaw rate gyro sensed the first bending mode slopes 180° out of phase with those predicted by theory. Analyses and a subsequent modal vibration test determined that the gyro mounting bracket was responding to deflections of the sidewall structure (a thin cylindrical shell) and measuring a local bending slope opposite in sign to the body deflection slope at the instrument station. The problem was corrected by introducting a pivot support at each end of the mounting

bracket which effectively made the gyro location insensitive to local sidewall deformation. This mounting arrangement was incorporated on all subsequent Thor launch vehicles (ref. 18).

Local deformation effects were also encountered on the Saturn V space vehicle. Attitude control of this vehicle was accomplished by gimballing the four outboard F-1 rocket engines on the first stage (fig. 7). Control signals to the gimbal actuators were generated as outputs from an analog computer which decoupled vehicle response in roll, pitch, and yaw. The analog computer also provided compensation and means for loop gain adjustment. Attitude signals were generated by an inertial measurement unit and attitude rate signals were also available from the body-mounted rate gyros. The attitude signals were processed by the launch vehicle digital computer and the data adapter, which provided commands to the analog computer.

The control gyros for all three axes were originally mounted on a plate attached to the shell of the instrument unit on the yaw axis (fig. 8a). During dynamic testing the pitch control gyro produced significantly larger signals than a backup pitch gyro located on the pitch axis.

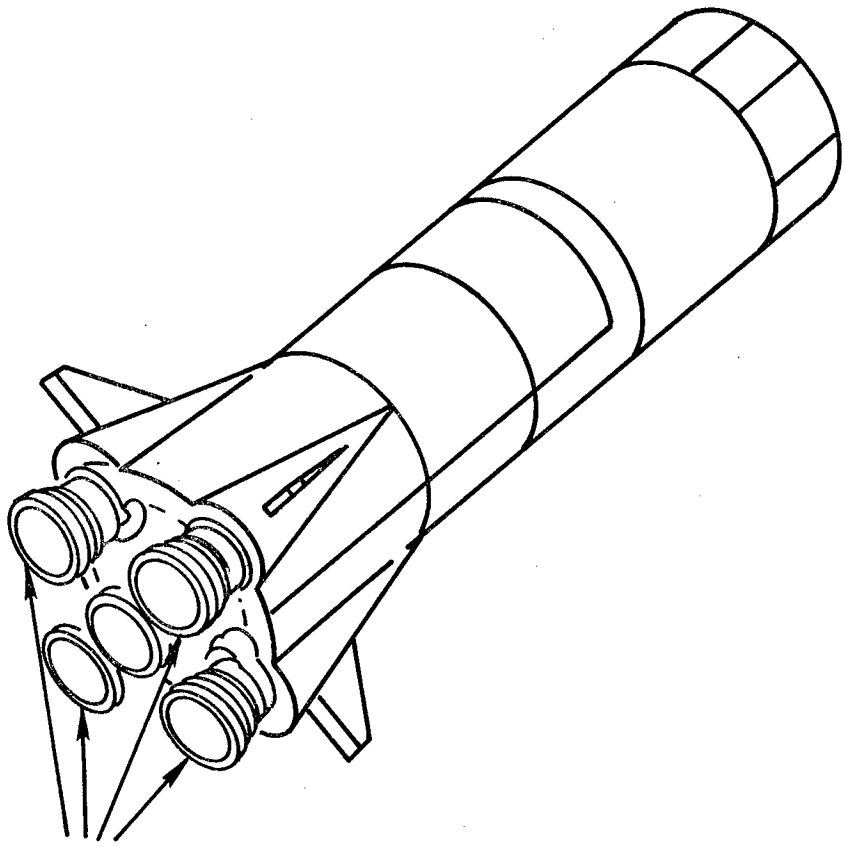

Figure 7.–Engine arrangement of Saturn V first stage.

Assessment of the cause revealed that, under applied dynamic shears and bending moments, the mounting plate was flexible enough to bend locally as result of instrument unit shell deformation. As shown in figure 8b, these local pitch deflections were amplified by the manner in which the loads were transferred into the instrument unit from the adjoining structure. The original control system design had not accounted for the observed local deformations. Data from more detailed tests indicated the possibility of a divergent structural feedback problem involving the second vehicle vibration mode and the primary pitch gyro. The problem was solved by moving this gyro to a position less sensitive to this mode, at a lower corner of the mounting plate, and by redesigning the control system filter networks (ref. 19). The feedback problems produced by out-of-plane bending of the mounting plate could have been avoided if the pitch and yaw gyros had been mounted on their respective neutral axes, because the slopes along these axes are produced by shear and are substantially lower than those produced by out-of-plane bending.

Actuators and engine mount flexibility.—A nondestructive 17-Hz limit-cycle oscillation was observed on telemetry during the flight of the Atlas 4A launch vehicle (ref. 20). Analysis showed that the limit cycle was a structural feedback problem to which both local and vehicle body deformations contributed. It was concluded that the gimbal actuator flexibility, in conjunction with certain engine servo nonlinearities and the third lateral vibration mode, created a control system instability. This behavior was unexpected because preflight analysis and simulation did not cover this combination of system characteristics in sufficient detail. The control system was subsequently modified to include a filter which eliminated the problem (ref. 21). A similar feedback problem that involved engine mount flexibility occurred on Atlas 3E (ref. 22). The problem was alleviated by relocating the rate gyro.

Effects of major components.—The dynamics of internal payloads or other major components, particularly those of relatively large mass, can affect local deformation characteristics and even overall vehicle response. A problem, related to but distinct from the Saturn V difficulty discussed above, was discovered during dynamic testing of the S-IVB Saturn stage with all spacecraft payloads in place. The lunar module, mounted in the spacecraft adapter section, exhibited several strong resonances close to the second vibration frequency of the S-IVB stage in the 7 to 10 Hz frequency range. Large associated deformations of the adapter structure were observed in the vicinity of the four lunar module attachment points. These deformations also extended down into the instrument unit, where the resulting loads caused amplification because of local mounting plate deflection (see fig. 8). Theoretical predictions of control gyro resources which did not include these local deformation effects, were of opposite sign and differed radically from the measurements. This problem was solved by moving the gyro package to the bottom of the mounting plate (ref. 19).

Engine inertia and resonance effects.—The inertia forces introduced by the motion of gimballed engines (as shown in fig. 9) can cause dynamic instability. On a space vehicle controlled by gimballed engines, an excitation frequency exists at which the engine inertia reaction force magnitude is equal and opposite to the magnitude of the lateral component

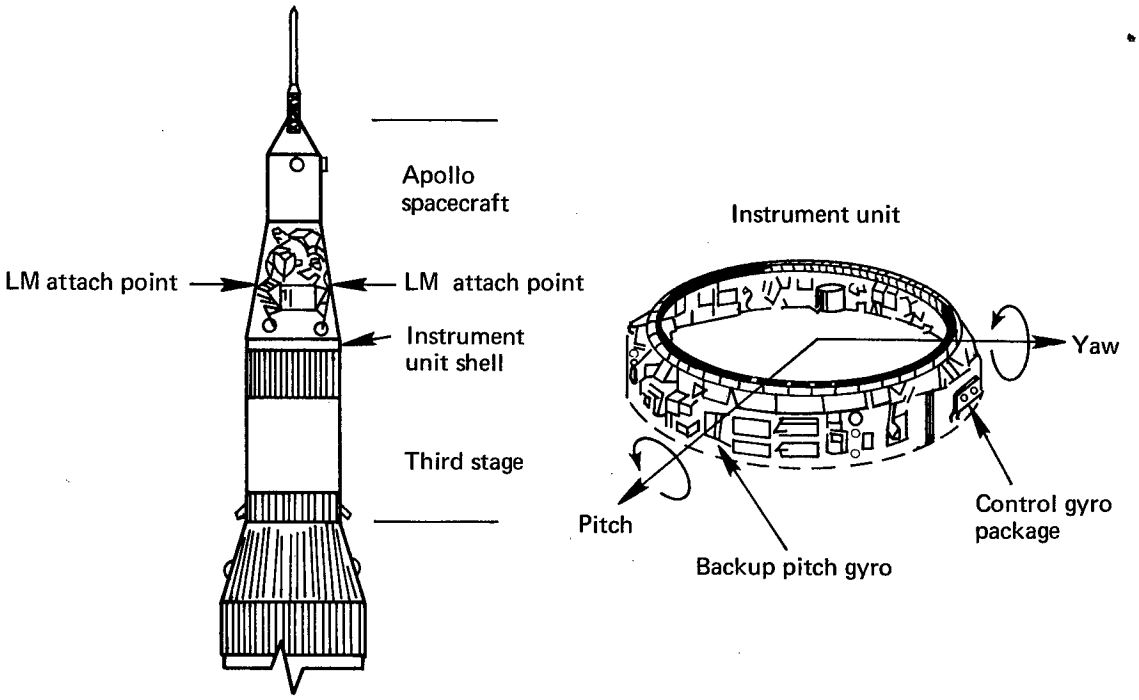

(a) Saturn V instrument unit.

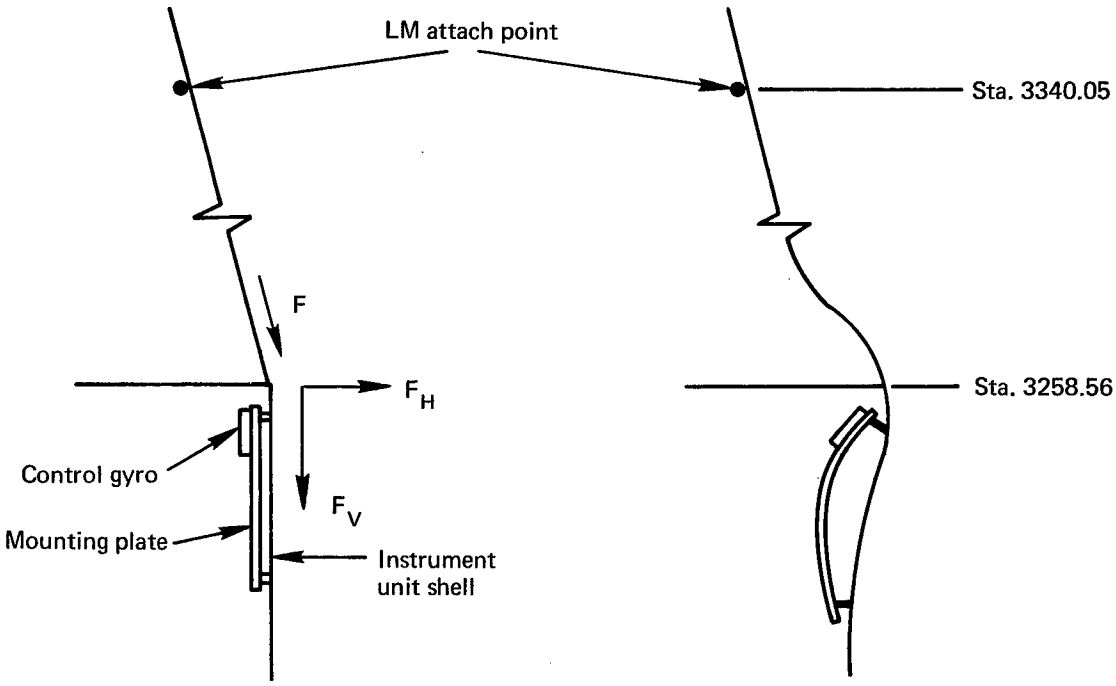

(b) Schematic of Saturn V control gyro mounting and local deformations.

Figure 8.–Saturn V local deformation.

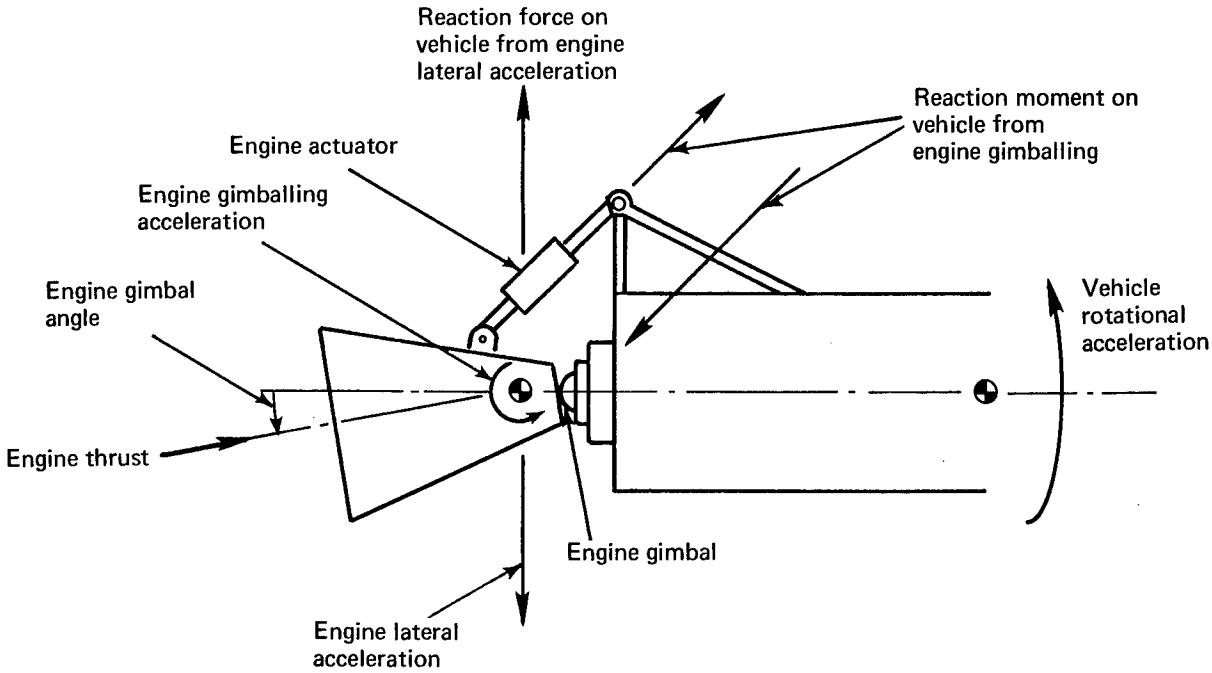

Figure 9.–Gimballed-Engine Forces

of thrust. Below this so called "tail-wags-dog" frequency, the resultant lateral force at the gimbal is predominantly due to thrust and is in phase with the gimbal angle; that is, an increase in gimbal angle results in an increase in the lateral component of thrust. Above this frequency, the engine inertia forces produce the dominant lateral force which is in phase with the gimballing acceleration. Since the gimbal angle and acceleration are 180° out of phase for a sinusoidal oscillation, the phase of the lateral force produced by the engine will change by 180° as the frequency of engine excitation passes through the tail-wags-dog frequency. A system designed to control or stabilize some aspect of vehicle motion by means of the thrust component alone could perform unsatisfactorily above the tail-wags-dog frequency. In particular, one of the higher frequency vibration modes might be driven into divergent oscillation by this phase reversal of the apparent control force if adequate structural damping or filter attenuation is not present (ref. 23).

This phenomenon occurred on early uprated Saturn I vehicles during stage separation when the engine thrust decay was more rapid than the "bleeding off" of the hydraulic pressure of the control system. In effect, for a few seconds an active control system existed with no thrust, causing a phase reversal of the transverse control force because of the tail-wags-dog effect. The first vehicle vibration mode oscillated sinusoidally until the hydraulic pressure was depleted in the control system (ref. 24). The problem was alleviated by reducing the control system gains during stage separation.

The tail-wags-dog effect also occurred in the absence of thrust during ground checkout of the Apollo command service module (CSM) SC 009 stack with the control system active.The lowest lateral vibration mode frequency was estimated to be above 20 Hz. A

one-dimensional analysis was used which idealized the structure as a nonuniform beam. The thrust vector system was designed to take advantage of this high frequency level by using substantial lead compensation near rigid-body frequencies. During this test the CSM was mounted atop the complete launch vehicle. The vehicle, excited only by gimbal actuators on the service propulsion system engine of the Apollo CSM, exhibited divergent oscillation at 17 Hz. This behavior was later confirmed to be associated with bending vibration when it was simulated using modal data obtained from a three-dimensional finite-element analysis of the Apollo vehicle. The new data predicted a first modal frequency of 17 Hz. Compensation networks were revised on the basis of the improved analysis and test data, and the vehicle was successfully flown.

Structural feedback can lead to unsatisfactory control system performance if the frequency of a vehicle vibration mode (normally the fundamental) falls below the tail-wags-dog frequency and some form of actuator load feedback is employed (see fig. 1). For example, divergent motion caused by vibration mode and engine mode coupling was predicted by analyses performed on stage II of the Titan III-B and Titan III-M. Because previous Titan versions had performed satisfactorily, the motion was attributed primarily to radically different vibration mode shapes between the Titan III-C with the Transtage and the Titan III-B and III-M with the Agena and MOL payloads, respectively. The situation was corrected by (1) reducing the differential pressure feedback to the servo-valve on the hydraulic actuator, which tended to stabilize the important mode; (2) modifying the autopilot with a gain change in the rate and displacement channels, together with a filter in the rate loop; (3) increasing the engine actuator moment arm, which aided in providing the required stability margin; and (4) increasing the propellant tank bottom stiffness which increased the stiffness of the backup structure and effectively kept the engine natural frequency higher than the tail-wags-dog frequency. This problem is discussed in depth in reference 25.

Another form of structural feedback associated with engine resonance is caused by a coincidence of a structural vibration frequency and engine natural frequency. The latter is a function of engine mass and inertia, engine mount elasticity, and actuating equipment dynamic characteristics. As a consequence of the coincident frequencies, control system sensors may demonstrate a particularly high response at the resonant frequencies, even though coupling in the actuator does not occur. Problems with this form of engine resonance are usually revealed by design analyses which normally include engine dynamics.

Control surfaces may also exhibit frequencies which cause control system response. During ground checkout of the autopilot of Little Joe II launch vehicle 12-51-1 (fig. 5), the aerodynamic control surfaces oscillated when the hydraulic system was activated. It was determined that a natural frequency of the control surface was approximately equal to a resonant frequency present in the rate gyro sensor system. Thus, control system vibration was fed back through the vehicle structure and sensed by the gyros. This problem was rectified by the addition of a second-order filter to the control system which provided satisfactory attenuation at 22 Hz (ref. 8).

2.3.2 Transient Response Problems

Transient factors imposed on the vehicle from various sources may initiate structural responses which can interact with the control system.

Thrust transients.—Thrust transients (e.g., engine ignition, engine shutdown, and uneven burning) can create significant loads or vibration levels. These can cause overall or local response of the vehicle resulting in structural feedback to the control system (see ref. 26). For instance, unsynchronized burnout of pairs of solid propellant engines, such as used on Titan III-C and III-M (fig. 6), can create a transient thrust misalinement. Thrust transients have not caused any known problems to date.

Liftoff and staging transients.—The control system may be adversely influenced by space vehicle response to liftoff and staging transients. For example, pyrotechnic devices used to separate the stages may cause shock pulses which could momentarily saturate the sensors. Structural response to these transients has not caused any documented control problems to date. Staging loads are discussed in reference 27.

Engine failure.—Failure of one or more engines of a multi-engined space vehicle can cause severe transient response because of the rapidly changing thrust vector. The influence of this effect is most pronounced when the engine gimbal angles approach the travel limit. Failure analyses for engine-out conditions of multi-engined space vehicles are normally conducted so that the effects of engine hardover and transients on the control system can be determined. Engine failures on the Saturn V (as originally designed) could have caused transient bending moments due to thrust misalinement. These moments could have resulted in a structural failure of the spacecraft payload. To preclude this possibility the outboard engines (fig. 7) were canted by a command to the control system in order to move the thrust vector closer to the center of mass.

Switchover to redundant control system.—Switchover from the primary control system to a redundant system, in the event of a detected malfunction, can result in severe transient response of the vehicle. The dynamic characteristics of the switchover circuit (i.e., the gimbal position sensors and switching relays) and the engine actuators may cause excitation of the vehicle vibration modes. In the case of the Titan launch vehicle used for the Gemini program, a switchover could have excited the first lateral bending mode of the vehicle because the frequencies of the switchover transient response and the vibration mode coincided. To rectify the situation, the switchover circuit was modified and the actuator maximum velocity limits were reduced to detune engine hardover transients from the vibration mode (ref. 28).

Slingshot effect.—The high acceleration near the end of a stage burn causes the propellants to be pressed firmly against the bottom of their tanks. Energy will be stored in the deformation of the tank structure. If the thrust tailoff at engine shutdown is rapid enough,

the stored energy and the release of the inertia forces could propel any residuals toward the forward bulkhead–the socalled "slingshot" effect. The resulting impact will produce a transient which could be sensed by the control system. No known significant problems on existing hardware have resulted from the slingshot effect.

2.3.3 Environmental Problems

Space vehicles are subjected to various environmental conditions which can cause oscillatory structural responses that initiate structural feedback. Principal sources of environmental loading are the air flow about the vehicle and the engines. Several of the more significant environmental problems are discussed in detail.

Noise.–Acoustic energy can cause control system problems primarily through its effects on sensors. This noise may reach sensors both by atmospheric and structural paths (ref. 29). Engine noise at liftoff produces a severe acoustic environment, but noise caused by the engines, the attached boundary layer, and flow separation may be equally severe at other times during flight in the lower atmosphere. A noise problem on a Saturn IB control gyro resulting from a low digital sampling rate is discussed in reference 30. A high frequency multiple of the sampling rate was introduced into the gyro data (frequency foldback). The problem was eliminated by increasing the digital sampling rate and filtering the resultant data input to the control computer which properly attenuated the noise.

The most significant noise problem is sensor saturation. The information contained in the desired signal may be severely attenuated or destroyed by saturation. The high level of engine noise at liftoff has been cited as a major reason for not locating instruments and sensors at the aft end of the space vehicles. The instrument unit section of the Saturn V is located in the forward part of the vehicle (fig. 8).

In addition to sensor saturation, there is the possibility of intermittent instrument operation or mechanical failure. At least two unsuccessful launchings of Atlas E and F vehicles were attributed to diode failures in the guidance computer caused by acoustic and mechanical vibration. Extensive research was expended in determining design modifications to isolate this acoustic and vibration environment (refs. 31 and 32).

Buffet.–Aerodynamic flow disturbances arising from flow separation at forward sections of space vehicles and impingement on aft sections cause a dynamic response phenomenon called buffeting. Protuberances and blunt and hammerhead nose sections are principal sources of these disturbances (ref. 33). Buffet manifests itself as a source of random vibration that can cause excitation of sensors and their mounts with attendant signal saturations.

Buffet, while not a major cause of structural feedback problems, has been observed to produce structural response. On Titan III-C vehicle 17, which incorporated a digital flight

control system, sensor environmental noise caused largely by aerodynamic buffeting could couple through the control system via the sampled-date folding phenomenon (frequency foldback) and excite the first vibration mode, thereby inducing large structural loads. The potential problem was alleviated by incorporating analog prefiltering on sensor inputs before sampling (ref. 34). On Saturn IB flight 202, some local noise effects were detected which were believed to be caused by buffet. Buffet can also produce a vehicle body vibration mode response, e.g., a 0.2-*g* response in the Saturn V second vibration mode.

Winds.—A prime consideration in the control system design is the vehicle response to inflight winds. These winds can be separated into low frequency inputs called "wind shears" and high frequency inputs called "gusts". Transient response caused by the gust portion of the wind loads can initiate structural feedback. Gust analyses and recommended wind profiles and design methods for determining structural response are discussed in reference 35. Generally, wind shear effects are a rigid-body consideration in the design of the control system, and produce only secondary effects through structural flexibility. For example, a load-relief control loop using a lateral accelerometer feedback was implemented on the Titan III-C to reduce vehicle angle of attack and the associated peak structural loading resulting primarily from wind shear. The load control loop was designed to improve the rigid-body performance; however, in addition to sensing rigid-body accelerations, the accelerometer sensed structural vibration signals which necessitated heavy filtering of this channel (ref. 36).

Structural response to ground winds is also considered in the design of the launch vehicle control system. In addition to the wind shear and gust components of the winds, the phenomenon of vortex shedding can induce structural response and undesired control system activity before liftoff. The engine motion induced by ground winds preceding liftoff must stay within the bounds of acceptable motion as determined by the rigid-body consideration of tower clearance. Engine gimballing prior to liftoff as a result of structural excitation of the Saturn IB has been discussed in section 2.3.1.1.

Pogo.—A sustained oscillation involving the coupling of the space vehicle longitudinal vibration modes and the propulsion system is commonly referred to as Pogo. The phenomenon has been observed on the Thor, Titan II, Atlas, and Saturn V launch vehicles (see refs. 37 and 38). While Pogo is basically divorced from control system interaction, the vibration levels associated with the phenomenon (if interaction occurs) may cause undesirable responses and saturation of control system instruments and sensors.

In some cases, more direct interaction may occur if coupling of the lateral and longitudinal modes is present. The Saturn V vehicle had strong pitch/longitudinal coupling which served as a mechanism to convert Pogo oscillations to lateral motion at the control gyros. The coupling was associated with stiffness asymmetries in the major components of the Apollo spacecraft. To determine the coupled modal characteristics of Saturn V, a three-dimensional finite element analysis was performed (refs. 39 and 40). Fortunately, the Pogo frequency was in a range (about 5-Hz) that was greatly attenuated by filter networks in the launch vehicle control system (ref. 41).

Panel flutter.—An aeroelastic instability of structural panels called panel flutter may cause an undesirable vibration environment with effects similar to those discussed previously under *Noise*. The panel flutter problem and its solution are presented in reference 42. To date, panel flutter has not been a significant problem to the control system designer.

2.3.4 Other Predicted Phenomena

In addition to the experience discussed above, other phenomena have been predicted that can influence structural feedback problems but which are not readily categorized. Several are discussed in this section.

Digital systems.—While most launch vehicles to date have been equipped with analog control systems, a digital flight control system was successfully flown in Titan III-C vehicle C-17 (ref. 43). An extensive study was performed on this vehicle to determine the extent of vibration mode frequency folding caused by the sampled data rate. It was found that, with the analog prefiltering on the sensor inputs (see sec. 2.3.3, Buffet), no stability problems existed as a result of vibration mode foldback (ref. 44).

In addition to basic system logic digital effects due to discretization of sensor inputs and guidance commands cause input signals at frequencies which can interact with either the control system or the vehicle dynamics (ref. 45).

Spin resonance.—Spin resonance involves a coincidence between spin rate and natural frequencies of transverse bending modes of slender bodies that results in excessive structural deformation similar to that associated with the critical shaft speeds. The phenomenon was encountered in the flight of a spin-stabilized Scout launch vehicle. The spin resonance problem is investigated analytically in references 46 and 47.

"Garden-hose" effect.—A potential interaction problem is that caused by extremely high thrust levels in a long, flexible launch vehicle. On an accelerating vehicle, the high thrust causes compression of the structure so that a condition similar to buckling of a column is approached. Structural flexibility causes a realinement of the thrust vector and the coupled structure/propulsion system may become self-excited. The situation is compared to the whipping of a garden or fire hose with high-pressure flow. While basically a structure/propulsion phenomenon, the excitation of vibration modes and the engine motion can severely complicate the control system design. The related phenomenon of high speed flow in pipes is discussed in references 48 and 49.

Pilot-in-the-loop.—Consideration has been given to performance of manual guidance and control functions during at least a portion of the flight of the space vehicle (refs. 50 and 51). For example, the Saturn V control system was designed with a pilot-in-the-loop control capability in a backup mode. The use of a pilot in the control loop introduces the possibility of pilot induced oscillations which could excite interactions between the control system and the structure. On the other hand, pilot control could possibly be effective in preventing interaction; however, this potential has not been fully investigated.

3. CRITERIA

It shall be demonstrated that there exists no divergent oscillation or other behavior, involving interaction of the control system with structural deformations of the launch vehicle, which could impair flightworthiness or, if the mission is manned, compromise crew safety. This demonstration shall include an investigation of the structural feedback effects on the control system acting under constraints imposed on the system by stability and response considerations, environment, and specified off-nominal flight conditions. Definition of the constraints, whether specified initially or evolved from design tradeoffs, should include consideration of at least the following:

Stability and response considerations

Launch

restrained vehicle dynamics (holddown)
dynamics at release
tower clearance

Inflight

external loads and resulting internal loads and stresses
propellant dynamics
vehicle attitude
engine gimbal angles and rates
propellant management
control response (rates and limit angles)
major component dynamics
linear stability margins
pilot-in-the-loop

Staging

vehicle attitude and attitude rates at burnout
separation clearance
structural response

Environment

Wind environment

ground winds
inflight winds (winds shears and gusts)

Acoustic environment

propulsion system noise
aerodynamic noise

Extraneous vibration environment

buffet
panel flutter
Pogo and thrust transients

Off-nominal conditions

System failures

engine out
engine actuator failure
redundant system operation

System tolerances

vehicle dynamics

vibration modes—frequency and shape
modal damping ratios
local flexibility effects at sensors and engine mount

control system

components
nonlinearities
limit cycle amplitudes

The control system should also be designed so that it is relatively insensitive to changes in the characteristics of the structure and/or control system hardware, and designed to have sufficient inherent versatility to handle limited changes in guidance and control requirements.

3.1 Design Verification

3.1.1 Analytical Studies

Analytical studies using proven methods and mathematical models of sufficient detail and complexity shall be performed to determine the structural flexibility effects on the control system. System performance and stability, and compliance with system requirements and specifications, shall be demonstrated.

3.1.2 Simulation Studies

Simulation studies shall be conducted whenever the interaction of the control system with flexible-body becomes so complex that available analytical techniques are inadequate and/or the space vehicle is so large that testing becomes impractical or impossible. These simulation studies should be used as a design tool, to demonstrate system performance, stability and compliance with system requirements and specifications. To achieve the most realistic simulation of the actual system, as much flight hardware as is feasible should be included. All manned systems should have manned system simulations.

3.1.3 Tests

A test program shall be established that ensures that estimates and assumptions made during analysis and simulation are verified, and that the control system meets performance and stability requirements throughout the flight envelope. The test program should be planned to ensure that test data are obtained early enough in the development cycle to benefit design decisions. Ground tests shall include structural and control system component testing, vibration and acoustic testing of realistic structure, control system operation tests, and if possible, overall system tests of the combined structure, populsion, and control system. The test plan should provide that the control system flight tests will be made concurrently with other system flight tests. If the launch vehicle is to be used for manned missions, flight test plans should ensure compliance with applicable crew safety criteria.

4. RECOMMENDED PRACTICES

The design of a flexible launch-vehicle control system entails a series of decisions involving interacting disciplines including controls, guidance, structure, aerodynamics, propulsion, and

test groups. A satisfactory configuration can best be achieved if consideration is given to all interacting aspects of design throughout the designing process, so that the merits of various options may be assessed and their full impact on all systems identified. Therefore, *it is recommended that personnel from the control systems, structural analysis, and other concerned groups work closely together throughout development and participate in all tradeoff decisions.*

As an effective means of ensuring the proper interface of design groups, it is recommended that all relevant data be documented and kept current in a common data book to facilitate accurate communications and provide a record for future reference.

4.1 Analytical Studies

4.1.1 Structural Modeling

It is recommended that, for the initial design analysis, free-free and/or cantilever vibration modes and frequencies be computed by idealizing the vehicle as a slender beam, and by using procedures such as those given in references 52 to 56. Other recommended practices for determining modal vibration data are reviewed in references 21 and 57 to 58.

Space vehicle mass and aerodynamic characteristics change appreciably during a flight. As a consequence a "time slice" analysis should be employed wherein a series of complete structural modal analyses are performed accounting for the vehicle characteristics at periodic intervals along the trajectory. Vehicle parameter values, applicable at the midpoint of each such interval, should be used to calculate vibration modes and frequencies. Characteristics should be obtained for as many modes as are deemed necessary to characterize adequately the structural dynamics (refs. 4, 13, and 59). Selection of modes for control system analysis should be made on the basis of modal gain—a measure of the flexible body motion induced at a control sensor by the control force applied by the gimballed engine or control surface with the inclusion of convergence studies to ensure that no important modes have been omitted. Time-slice intervals should be chosen short enough to reduce approximation errors to tolerable limits.

Tolerances should be introduced into the structural model to account for uncertainties in the vibration data. Based on recommendations presented in reference 56, vibration frequencies should be accurate to within ±5 percent for the first mode and ±10 percent for the second through the fourth or fifth modes. The values of vibration frequencies vary from vehicle to vehicle and from stage to stage. The data (approximate) listed in table I illustrate typical results that should be expected for various configurations. (See refs. 60 and 61 for correlation of analytical and test values for the Saturn IB and Saturn V, respectively.) It is strongly recommended that, whenever possible, the mathematical model be verified by tests.

Table I.—*Vibration Mode Data (Fully-Loaded Configuration)*

Vehicle	Closed-loop rigid-body frequency (Hz)	Vibration mode	Frequency* (Hz)		Damping† ratio	
Atlas/Able-4B	0.40	First	2.7			
		Second	6.3			
		Third	12.7			
Atlas/Agena/OAO	0.40	First	3.6		0.007	Test
		Second	7.2		—	
		Third	8.2		0.016	
		Fourth	9.5		0.012	
		Fifth	15.0		0.012	
Atlas/Centaur/ Surveyor	0.42	First	2.0		0.019	
		Second	5.2		0.013	
		Third	6.9		0.019	
Thor/Delta or Agena	0.20	First	2.2		0.007	Estimated
		Fourth	17.0		0.010	
Titan III-C Stage 0	0.25	First	1.8		0.008	
		Second	2.9		0.010	
		Third	5.4		0.010	
		Fourth	>6.5		0.015	
Upgraded Saturn I (SAD-6) (dynamic test vehicle)		First	1.7		0.008	Test
		Second	3.3		0.009	
		Third	4.1		0.014	
		Fourth	5.0		0.008	
		Fifth	5.6		0.006	
		Sixth	7.2		0.007	
Upgraded Saturn I (AS-205)	0.15	First	1.1	Calculated	0.005	Estimated
		Second	2.2		0.005	
		Third	3.8		0.005	
		Fourth	5.8		0.005	
		Fifth	8.4		0.005	
		Sixth	10.0		0.005	
Saturn V/Apollo	0.20	First	1.0		0.005	Test
		Second	1.7		0.007	
		Third	2.3		0.006	
		Fourth	3.0		0.010	

* These frequencies are free-free; test values are corrected from test support conditions.

† Damping ratio is the ratio of actual damping to critical damping. Test values are from decay records. Estimated values are extrapolations of test data on similar vehicles.

The accuracy with which structural dynamic parameters can be predicted is highly dependent on the model used. For example, the frequency of the first four vibration modes of the Saturn V vehicle during the first stage boost were predicted within ±4 percent. The modal gains for these modes were predicted within margins ranging from ±3 dB on the first mode to ±8 dB on the fourth mode. For second stage boost, the frequency prediction error was ±3 percent on the first mode, ±13 percent on the second mode, ±4 percent on the third mode, and ±50 percent on the fourth mode. After improvement of the model following test correlation, the frequency of all four modes for the second stage was predicted within ±10 percent. Before testing, the modal gain prediction accuracy ranged from ±4 dB on the first mode to ±12 dB on the fourth mode (ref. 61).

Since the structural energy dissipation is a nonlinear function of amplitude and cannot be calculated, it is recommended that, where possible, modal damping estimates be obtained from measurements made on the actual vehicle structure, excited to flight amplitudes. If the foregoing procedure cannot be accomplished, it is recommended that the modal damping ratios be estimated on the basis of past experience with similar vehicle structure. Experience has shown that the damping ratio can be estimated between 0.005 and 0.019 for the first four to six modes. Typical values are presented in Table 1.

For space vehicles that have inertial or stiffness asymmetry and may therefore possess significant cross-coupling characteristics, a more detailed structural analysis with less beam-type idealization of structure is recommended, at least in the later design stages (refs. 52 to 55, 62 and 63). Payload and internal component characteristics should be included in the analysis. The finite-element mechanization which was finally used to compute the three-dimensional modal characteristics of the Saturn V/Apollo vehicle is an example of this type of analysis (refs. 39 and 40).

4.1.2 Control System Design

Selection of an appropriate control system configuration is bounded by numerous mission-connected constraints such as those discussed in section 2.2. Consideration of these constraints results in basic control system selections which involve implementation by analog or digital equipment, number of gimballed engines, need for load relief, and extent of redundancy.

The control system should initially be designed to stabilize the rigid launch vehicle. The basic choice of sensors, actuating equipment, computing equipment, compensation and signal conditioning are dependent on satisfying rigid-body stability requirements. Whenever possible, it is recommended that the control system be designed using assumed negligible coupling between the pitch, roll, and yaw axes. The effects of cross-coupling between axes should be evaluated later in the design, usually in simulation studies. Structural flexibility and propellant slosh effects should then be added to the analysis; the performance of the control system reevaluated; and the design altered to provide acceptable performance of the total system.

It is recommended that linear control theory be used for the initial analysis (refs. 64 to 69). Linear, time-invariant stability analysis methods are particularly useful to provide insight, and as design tools. Associated with these techniques are the concepts of gain and phase stabilization, which were discussed in section 2.1. Linear analysis is valid only for system responses of limited amplitude and for short intervals during which the system may be assumed stationary. In spite of these limitations, these methods have proved invaluable and provided the primary tools for the design of almost all the launch vehicle control systems to date. Gain and phase margin (see ref. 66) are especially useful as indications of system performance. The gain and phase margin values given in table II are representative of those used on successful designs in the past. Based on this past experience, it is recommended that, if the conventional control system design is adequate to meet launch vehicle requirements, the following should be performed:

(1) Phase stabilize the first vibration mode*

(2) Gain and/or phase stabilize the second vibration mode

(3) Gain stabilize the third and higher vibration modes.

Gain margins of 6 dB and phase margins of 40° have proved to be suitable values with which to begin the design.

Since the dynamic characteristics of space vehicles change rapidly during the flight, the control system gain values chosen to satisfy liftoff stability requirements may be inadequate later in the flight. Implementation of a preprogramed change in gain (gain scheduling) is a recommended procedure.

If sufficient gain and/or phase stabilization cannot be obtained using conventional (simple) control laws and filtering, the following techniques should be investigated:

(1) Use of notch filters to attenuate control system response at a critical structural vibration frequency. This technique has been applied successfully but its use is limited because of the rapidly changing structural response characteristics.

(2) Use of multiple feedback sensors (ref. 70).

(3) Use of an adaptive control system (ref. 71 and 72).

Once a linear design is completed, the effects of nonlinear elements should be investigated (see, e.g., refs. 68 and 73). Hard nonlinearities such as saturation, dead zones, and backlash

---

*An exception is that some stages operating outside of the sensible atmosphere (e.g., Centaur) may possibly be gain stabilized in all modes.

Table II.—*Gain and Phase Margins*

Vehicle	Vibration mode	Stabilization technique	Design requirements
Atlas	First	Phase	From launch to 20 sec of flight: 15° phase margin for $\delta = 0.3°$ (zero to peak of engine angular oscillation at first vibration mode frequency); from launch throughout flight: 30° phase margin for $\delta = 0.1°$.
	Second and higher	Gain	Maintain 6 dB gain margin
Centaur	First	Gain	Maintain 6 dB gain margin
	Second and higher	Gain	Maintain 6 dB gain margin
Thor	First	Phase	30° phase margin with respect to servo loop tolerances.
	Second and higher	Gain	6 dB gain against forward loop servo gain tolerances.
Titan III	First	Phase	30° phase margin (low frequency side of mode peak (frequency); 45° phase margin (high frequency side of mode peak frequency); 8 dB gain margin between first and second modes.
	Second	Gain or phase	45° phase margin (low and high frequency side of mode peak frequency); 8 dB gain margin between first and second modes.
	Third and higher	Gain	10 dB gain margin (independent of phase)
Saturn IB	First	Phase	45° phase margin
	Second and higher	Gain	6 dB gain margin
Saturn V	First	Phase	45° phase margin
	Second	Gain and phase	45° phase margin; 6 dB gain margin
	Third and higher	Gain	6 dB gain margin

are of particular interest because they admit the possibility of limit cycle oscillations. Quantization and finite sampling effects of digital controllers may also exhibit this phenomenon. Quasi-linear analysis using the described function technique is especially useful and, when appropriate, is recommended for predicting limit cycle frequency, amplitude, and stability. Phase plane analysis can also be useful to provide insight into nonlinear behavior; this method is generally limited to second order systems.

Preliminary work has begun in the application of statistical methods and optimal control theory to the design of launch vehicle control systems (refs. 74 to 76). Certain aspects of these methods are especially promising because they afford a more direct measure of system performance relative to the operational requirements and/or constraints given in section 2.2. For example, covariance analysis (ref. 77) can be used to obtain a measure of the probability of exceeding structural limits during flight. The theory of optimal control can be used as a design guide to indicate the best system that can be obtained from a specific set of criteria.

4.2 Structural Feedback System Simulation

The control system design for a flexible space vehicle necessitates the investigation of the response of interacting vehicle vibration modes. Present experience with these systems suggests that vehicle vibration modes should be included from the earliest stages of dynamic analysis. If liquid propellants are to be used, propellant slosh dynamics should be included. Also, the dynamics of any gimballed engine and associated actuation hardware should be included (refs. 4 and 78). A computerized control system simulation incorporating the flexible structure dynamics is recommended. Real-time simulation of the operation of the system, utilizing as much of the flight or flight-type hardware as practical, is recommended. It is also recommended that the simulation investigate, as a minimum, the following flight events:

- First stage

  Before liftoff
  Liftoff
  Attitude program
  High dynamic pressure
  Engine shutdown
  Separation

- Upper stages

  Ignition
  Guidance–control interaction
  Tower jettison (if applicable)
  Engine shutdown
  Separation

During further refinement of the simulation, a mathematical model should be developed that considers all significant dynamic phenomena such as cross-coupling in pitch and yaw, unsteady aerodynamic effects on lifting surfaces, flexible internal structures, and dynamic characteristics of sensors and actuators (see, e.g., refs. 4, 12, 23, and 79 to 81). Provision should be made in the simulation for changes in parameter values so that off-nominal or malfunction conditions can be investigated (ref. 82). The effects of the highest probability malfunctions should be investigated to determine if modifications can be made in the nominal design to improve off-nominal performance (refs. 83 and 84). The simulation should include all significant nonlinearities in both the control system and structure. Investigations of limit cycle amplitude, frequency, and stability should then be carried out to verify nonlinear analysis. In addition, the simulation should model the effects of digital components in the control loop. Frequency folding due to finite sample intervals and quantization may have important effects and should be investigated. Roundoff errors resulting from finite word length, as well as computer speed requirements, should be investigated. Either the computer itself or an accurate computer simulation should be included in the total system simulator so that control system software may be tested.

4.3 Tests

Tests to determine control system and structural hardware characteristics are recommended in the development of every vehicle (refs. 85 to 89). Dynamic tests should be performed on control system gyros, sensors, and actuators to determine their frequency response characteristics. Tests for friction, hysteresis, leakage, and other contributors to saturation dead-zones and backlash should be conducted (ref. 85). Test results should be correlated with analyses and appropriate modification made when necessary.

Recommended tests for determination of structural data are described in reference 56. They include static tests to verify major load displacement characteristics using, if possible, full-scale engineering models or prototype vehicles. If full scale tests are not feasible, similar data can be obtained from replica models (refs. 39 and 90). These data should be used with caution since these models are not capable of predicting local effects accurately. The tests should obtain, at a minimum, the elastic characteristics for the primary load carrying structure with loads applied at the location of primary masses or major attachment points.

Dynamic tests are also recommended on full-scale engineering model, prototype, and/or flight hardware to determine structural frequencies, mode shapes, and damping. The test vehicle should be suspended or mounted to reproduce, as closely as possible, the true inflight boundary conditions, so that free-free modes of the vehicle can be properly obtained. Examples of how free-free mode shapes were determined for Thor and Saturn V are given in references 91 and 40, respectively. Local response as well as overall response should be monitored, especially at stations where important control instrumentation might be located (reference 86).

It is recommended that the test program be initiated as soon as possible, following preliminary control system design. Gimbal test stands should be developed early in the program using simulated engine mass and inertia, as well as mount elasticity, with a capability provided to vary these parameters. A test stand permits evaluation of prototype components, as well as the above parameters. In addition, the resonant frequency of the effector including the engine, actuator, and backup structure can be established. Dynamic test stands should also be used which may utilize specially built test specimens or functional mockups of the aft portion of the vehicle. If possible, actual engine equipment should be utilized as should prototype electronic packages and feedback sensors. Frequency response tests are recommended to determine the control system characteristics, including nonlinearities which could result in limit cycles, and the effects of structural resonances on control system performance. Engine gimbal tests should be run open-loop to yield more accurate data.* Closed-loop tests are recommended to demonstrate the dynamic performance of the flight control system. As a final evaluation before flight, the launch vehicle should be tested in a restrained condition with the engines firing and the control system operating open-loop. This test is particularly useful for verifying assumptions relative to the effects of engine transients, acoustic or engine structural vibration, and local structural resonances. The above tests are described in more detail in reference 85.

4.4 Specific Recommended Practices

Extensive flight experience with space vehicles has resulted in a number of specific practices and considerations developed to cope with the structural feedback problems reviewed in section 2.3. As these practices were developed for particular vehicles, their applicability to other vehicles must be properly evaluated.

---

*The flight control loop is open but the actuator loop is closed.

4.4.1 Structural Feedback Problems

4.4.1.1 Vehicle Body Deformation

Sensor location.–

(1) Within design limitations, sensor location should be determined by consideration of the effects on control of the flexible vehicle.

(2) Insofar as possible, locate gyros near the nodes and accelerometers near the antinodes of all modes that are phase stabilized by the control system, and conversely for modes that are gain stabilized. In practice, the actual placement of flight control instruments will be a compromise location, neither close to nodes nor antinodes, but rather the location giving the best stability margins from the consideration of all vibration modes.

(3) Consider the use of multiple sensor installations to aid in stabilization and to diminish control system sensitivity to structural vibration (see, e.g., ref. 70). For example, the blending of two separately located rate gyros signals on the Titan vehicles effectively cancelled the first vibration mode.

Vibration mode characteristics.–

(1) Choose important modes for control system analysis on the basis of modal gain–the modal deflection at the engine gimbal times the modal slope at the gyro location divided by the generalized mass (see ref. 1, appendix B, equation B-7). Higher frequency modes whose amplitudes do not produce significant modal gain may be neglected; however, if modal gain is low because the point under consideration is a node or antinode, slight variations in mode shape may produce significant gains. Both gain and mode shape should be considered before a particular mode is rejected.

(2) Select vibration modes that reflect static as well as dynamic deformation patterns (ref. 39).

(3) Determine the effects of configuration changes on vibration mode characteristics.

(4) If vibration mode frequencies lie close to the controlled rigid-body frequencies, consider coupling between the two. If possible, the control frequency should be less than or equal to one-fifth of the first bending-mode frequency to avoid coupling (ref. 45).

(5) Consider the effects of flexible modes on the control system preceding liftoff, particularly if the space vehicle is restrained following ignition and the controls are activated before liftoff (ref. 11).

Propellant slosh.–

(1) Include propellant slosh dynamics in the structural feedback analysis using methods such as those presented in references 12 and 92.

(2) Use baffles if possible to correct slosh stability problems for both normal and off-loaded propellant requirements (refs. 13 and 93).

Aeroelastic effects.–

(1) For analysis of launch vehicles with winged or long flexible payloads, consider the coupling effects of steady and unsteady aerodynamics on the flexible and rigid-body modes as discussed in reference 15.

(2) Analyze flutter of fixed and movable surfaces (including engine deflector vanes) by methods such as those described in references 21 and 94.

(3) Determine the aeroelastic effects associated with body deformations from the distribution of normal-force-coefficient slopes over the length of the vehicle at various angles of attack. Since the reduced frequencies for most space vehicles are in the neighborhood of 0.1, quasi-steady aerodynamics should be used to obtain the distributions. In the low supersonic region, use Van Dyke Second Order Hybrid Potential Flow (ref. 95). Where this theory is inapplicable (e.g., on a blunt nose) shock expansion theory may often be used (ref. 96). If a computer program is not available, load predictions can be based on test data found in reference 97. When integrated force and moment wind tunnel data are available, they should be checked against corresponding theoretical results; the theoretical distribution should be adjusted to eliminate any discrepancy.

4.4.1.2 Local Deformation

Sensor mounting.–

(1) When possible, the natural frequency of the sensor mounting structure should be at least twice that of the sensor bandpass.

(2) Include sensor mounting structure in the structural math model; slopes should be predicted for the actual sensor locations (refs. 39 and 40).

(3) If possible, locate sensors away from massive or dynamically active components that can cause local deformation. Consideration should also be given to the effects of local deformation due to noise, panel flutter, and buffet.

(4) Design sensor mounts to ensure that the desired quantity is measured. The Thor problem of section 2.3.1.2 is a case in point.

(5) Because local deformation frequently is a problem, consider mounting pitch and yaw gyros separately on their respective structural neutral axes.

Actuators and engine mount flexibility.–

(1) Determine the coupling of structural flexibility with engine and actuator dynamics. The structural analysis should include the condition where the control engines are rigidly attached at the gimbals so that the effect of local structural flexibility at the actuator attach points will not be lost. This analysis can be conducted with the engine mass removed if necessary; however, high frequency modes which are usually not included in the control system analysis must be included, in addition to the engine rotation degree of freedom in order to obtain proper convergence (ref. 40).

(2) In addition to actuator dynamics, consider hydraulic fluid compressibility, hose restraint, gimbal friction, backup structure flexibility, and if necessary, engine flexibility.

(3) In the selection of hydraulic actuators, choose maximum velocity and maximum force capabilities with respect to control system performance requirements. Do not arbitrarily put large margins of safety on these limits because the hydraulic system saturation characteristics provide a limit on the amount of moment applied to the vehicle during high frequency oscillation.

Effects of major components.–

(1) Design the control system so that the flexibility of internal vehicle components does not cause structural feedback problems. The stiffness, inertial damping, and location of the internal components should be considered (refs. 39 and 40).

(2) If the effects of a flexible vehicle component on the overall dynamics appear to be important, add the component dynamics as separate degrees of freedom and conduct a tolerance analysis on the component effects.

(3) Allow for structural cross-coupling in the control system design. Both stiffness and inertia asymmetry should be assessed (refs. 39 and 40).

Engine inertia and resonance effects.–

(1) Include engine inertia effects in the control system design (ref. 23).

(2) Consider the possibility of engine and actuator dynamics coupling with the flexible structure (ref. 25).

(3) If possible, keep the gimballed engine resonant frequency above the tail-wags-dog frequency.

4.4.2 Transient Response Problems

Thrust transients.–

(1) For proper consideration of the dynamic excitation introduced by thrust transients, see reference 26.

(2) Consider thrust transient effects due to unsynchronized burnout of engines.

Lift-off and staging transients

(1) For proper consideration of the dynamic excitation introduced by lift-off and staging transients see reference 27.

(2) Determine and allow for the effects of thrust misalinement variations on loads, controllability, and staging dynamics.

Engine failure.–If possible, design the control system of multi-engine launch vehicles to maintain the vehicle attitude within specified limits in the event of engine failures (refs. 83 and 84).

Switchover to redundant control system.–

(1) Investigate the effects of switchover lags, actuator rate limits, coincidence of switchover circuit and vibration mode frequencies, and other switchover phenomena on the dynamics of the controlled vehicle.

(2) If the switchover circuit frequency is coincident with a vibration mode frequency, modify the circuit to detune it (ref. 28).

Slingshot effect.–Include the slingshot effect (described under sec. 2.3.2) in the analysis of propellant dynamics. This effect is discussed in reference 98.

4.4.3 Environmental Problems

Noise.–Consider the acoustic environment in the selection of sensors and their location. See reference 99 for consideration of acoustic loads.

Buffet.–Use reference 33 and documents cited therein for details on the effects of buffet, and methods to minimize the buffet conditions. If possible, do not locate sensors in areas that are buffet prone.

Winds.–

(1) Consider the effects of inflight winds (gusts and wind shears) in the control system design using methods similar to those given in reference 35.

(2) Consider the effect of ground winds including vortex shedding using methods similar to those given in reference 100.

Pogo.–If the space vehicle has significant longitudinal-lateral cross-coupling, consider the possibility of a control system interaction with Pogo. Pogo can be investigated by methods noted in references 101 and 102. If pogo problems are suspected, consider the use of filters to remove pogo oscillation inputs from sensor signals.

Panel flutter.–Examine external panels for the possibility of panel flutter as discussed in reference 42. Control system sensors should not be located near skin panels which have marginal stability.

4.4.4 Other Predicted Phenomena

Digital systems.–

(1) In general, consider the effects of input and output quantization increments on vibration mode response (ref. 103).

(2) Consider the effect of frequency foldback (sampling rate problem) on vibration mode stability.

(3) Filter rate gyro and accelerometer signals before sampling to eliminate potential problem of noise folding down into structural mode regime.

(4) The frequency of programed pitch and guidance commands should not coincide with either flexible or rigid-body modal frequencies. If this cannot be accomplished, several alternatives which can be tried are: (a) do not guide during those portions of the flight when coincidence of sampling rate and vibration frequencies is critical; (b) revise the guidance program to avoid coincidence of frequencies; and (c) filter input commands to remove that portion of the signal exciting the vibration frequency.

Spin resonance.–

(1) Use analysis methods as given in references 46 and 47.

(2) Spin rate should not exceed 70 percent of the natural frequency of the first lateral mode. This margin reflects uncertainties in the values of the natural frequency and of the spin rate that may be achieved.

(3) Spin rates above the natural frequencies of the lower modes are not recommended. If, however, a spin rate above the lower natural frequencies is required, accomplish the following if possible:

(a) The rate should be nearly midway between adjacent natural frequencies if practical.

(b) The rate should be separated from the nearest natural frequency by a margin equal to at least 30 percent of the lowest natural frequency.

(c) The spin acceleration should be high enough that the transient lateral deformation developed during passage of the spin rate past the natural frequencies will not be excessive.

"Garden-hose" effect.–Determine if structural response is being excited by high thrust levels; include in analysis if this is a problem. The effects of high velocity flow in pipes are discussed in reference 48.

Pilot-in-the-loop.–

(1) If a pilot control mode is to be used, include the pilot in the simulation of the control system with flexibile-body dynamics.

(2) Investigate the use of the pilot for control of space vehicles having a low first vibration mode frequency. It is expected that pilot control will be effective only in systems requiring pilot response at frequencies less than approximately 1.5 Hz.

REFERENCES

1. Anon: Effects of Structural Flexibility on Spacecraft Control Systems. NASA Space Vehicle Design Criteria Monograph (Guidance and Control), NASA SP-8016, Apr. 1969.

2. Waymeyer, W.K.; and Sporing, R.W.: An Industry Survey on Aeroelastic Control System Instabilities in Aerospace Vehicles. IAS Paper No. 62-47, presented at the IAS 30th Annual Meeting (New York), Jan 22-24, 1962.

3. Vander Velde, W.E.: Space Vehicle Control Systems. Space Navigation Guidance and Control, AGARDograph 105, Aug. 1966.

4. Greensite, A. L. : Analysis and Design of Space Vehicle Flight Control Systems. Vol. VII: Attitude Control During Launch. NASA CR-826, July 1967.

5. Frosch, J. A. : Saturn AS-501/S-IC Flight Control System Design. Spacecraft and Rockets, vol. 4, no. 8, Aug. 1967, pp. 1003-1009.

6. Cheilek, H. A. ; and White, Richard: Analysis of VTV-4 Control System-Body Flexure Instability. Cornell Aeronautical Lab., Inc., June 28, 1951.

7. Anon: Flight Test Evaluation Report. Rep. AE60-0954, Convair Div., General Dynamics Corp. Mar. 7, 1961.

8. Hurt, J. B. : Little Joe II Test Launch Vehicle, NASA Project Apollo; Final Report. GDC-66-042, Convair Div., General Dynamics Corp., May 1966.

9. Anon.: Flight Plan VII-VIIA Stability Analysis Report, Addendum A. TM-0451-14-65, Martin Marietta Corp. June 8, 1966.

10. Anon.: Addendum to Flight Plan VIII Stability Analysis Report. TM-0451-5-65, Martin Marietta Corp., May 12, 1962.

11. Mitchell, H. P. : Saturn IB First Stage Control System Performance, AS-203. Tech. Note TN-AP-66-153, Space Div., Chrysler Corp., Dec. 16, 1966.

12. Anon.: Propellant Slosh Loads. NASA Space Vehicle Design Criteria Monograph (Structures), NASA SP-8009, Aug. 1968.

13. Anon.: Slosh Suppression. NASA Space Vehicle Design Criteria Monograph (Structures), NASA SP-8031, May 1969.

14. Gandy, C. L., Jr.; and Hanson, I. B.: Mercury-Atlas Launch-Vehicle Development and Performance. Mercury Project Summary Including Results of the Fourth Manned Orbital Flight, May 15-16, 1963. NASA SP-45, Oct. 1963.

15. Murabayashi, R. J.: Booster Control Problem Associated with Maneuverable Spacecraft. Vol. II: Aeroelastic Effects on Booster Stability. TOR-0066 (5306)-6- Vol. II, Aerospace Corp., Aug. 1969.

16. Swaim, R. L.: Effect of Low-Frequency Elastic Mode Shape on Forward-Loop Stability Characteristics of Winged Boosters. ASRMCM-TM-62-8, AF Flight Control Lab., July 1962.

17. Anon.: WS-117L Discoverer Program, Flight Test Report for Thor Booster S/N 179. Rep. SM-36025, Douglas Aircraft Co., Oct. 16, 1959.

18. Anon.: WS-117L Discoverer Program, Flight Test Report for Thor Booster S/N 200. Rep. SM-36059, Douglas Aircraft Co., Nov. 2, 1959.

19. Saturn V Dynamic Test Vehicle Special Vehicle Structural Design Verification Tests, Vol. I. Document No. T5-6630-5, The Boeing Co., May 17, 1967.

20. Anon.: Flight Test Evaluation Report. Rep. ZC-7-084-4A, Convair Div., General Dynamics Corp., June 25, 1957.

21. Bisplinghoff, R. L.; and Ashley, Holt: Principles of Aeroelasticity. John Wiley & Sons, Inc., 1962.

22. Anon.: Flight Test Evaluation Report. Rep. AE60-0542, Convair Div., General Dynamics Corp., Nov. 4, 1960.

23. Gordon, C. K.: Analysis and Synthesis of Flight Control Systems for Flexible Boosters. Document No. D5-13085, The Boeing Co., Mar. 1965.

24. Wells, C. R.: Simplified Approximations of Bending and Sloshing Mode Root Loci of Gimballed Engine Attitude Controlled Missiles. Tech. Note TN-AE-64-63, Space Div., Chrysler Corp., June 10, 1964.

25. Przekwas, R. J.: An Analysis of the Bending-Servo Coupling Problem and Some Specific Applications. TM-0451-67-7, Martin Marietta Corp., Mar. 1967.

26. Anon.: Transient Loads From Thrust Excitation. NASA Space Vehicle Design Criteria Monograph (Structures), NASA SP-8030. (To be published.)

27. Anon.: Staging Loads. NASA Space Vehicle Design Criteria Monograph (Structures), NASA SP-8022. (To be published.)

28. Clements, J.; and McFarland, R.: LV-228, Hardover-Engine Malfunctions Structural and Controllability Evaluation. Gemini Program Launch Vehicle System, Martin Marietta Corp., Apr. 22, 1963,

29. Anon.: The Acoustic and Vibration Environment of the Titan II Vehicle. Air Force BSD-TDR-63-189, Sept. 1963.

30. Mitchell, H. P.; and Worley, N. D.: Saturn IB First Stage Control System Performance, AS-204. TN-AP-68-323, Space Div., Chrysler Corp., May 16, 1968.

31. Anon.: Atlas Series E/F Computer, Liftoff and Staging Problems (CLASP), Final Summary Report. Rept. GDA-APZ64-070, Convair Div., General Dynamics Corp., Dec. 22, 1964.

32. Obertreis, H. L.: Isolation of Susceptible Electronic Components From Missile Liftoff Vibration and Acoustic Environment. Proceedings of the Institute of Environmental Sciences 1965 Annual Technical Meeting, Chicago, Apr. 21-23, 1965, pp. 563-567.

33. Anon.: Buffet During Launch and Exit. NASA Space Vehicle Design Criteria Monograph (Structures), NASA SP-8001, May 1964.

34. DuPont, T. E.: TIII C Autopilot Noise Susceptibility,TM-0451-68-6, Martin Marietta Corp., Jan. 1968.

35. Anon.: Wind Loads During Ascent . NASA Space Vehicle Design Criteria Monograph (Structures), NASA SP-8035, June 1970

36. Farrell, R. J.: Introduction to Lateral Structural Bending in Flexible Launch Vehicles. Paper presented at SAE A-30 Stabilization and Control Subcommittee Meeting (New York), 1963.

37. Rich, R. L.: Saturn V POGO and a Solution. Structural Dynamics Volume. Paper presented at AIAA Structural Dynamics and Aeroelasticity Specialist Conf. (New Orleans), Apr. 16-17, 1969.

38. Goldman, R. L.: Elimination of the POGO Instability from the Gemini Launch Vehicle. Dynamic Stability of Structures, George Herrmann, ed., Pergamon Press (Bristol, England), 1967.

39. Grimes, P. J.; McTigue, L. D.; Riley, G. F.; and Tilden, D. I.: Advancements in Structural Dynamic Technology Resulting from Saturn Programs, Vol. I. NASA CR-1539, June 1970.

40. Grimes, P. J.; McTigue, L. D.; Riley, G. F.; and Tilden, D. I.: Advancements in Structural Dynamic Technology Resulting from Saturn Programs, Vol. II. NASA CR-1540, June 1970.

41. Ryan, R. S.; et al: A Study of Saturn AS-502 Coupling Longitudinal Structural Vibration and Lateral Bending Response During Boost. AIAA Paper No. 69-58, presented at AIAA 7th Aerospace Sci. Meeting (New York), Jan. 20-22, 1969.

42. Anon.: Panel Flutter. NASA Space Vehicle Design Criteria Monograph (Structures), NASA SP-8004, May 1965.

43. Freeman, N.; and Teets, P.: Titan III C Digital Flight Control. Paper presented at AIAA Guidance, Control, and Flight Mechanics Conf. (Princeton, N. J.), Aug. 18-20, 1969.

44. Szollosi, G. D.: Titan III C Vehicle 17-18 Bending Mode Reflection Study 25 sps System. TM-0451-67-26, Martin Marietta Corp. June 9, 1967.

45. Lovingood, J. A.; and Geissler, E. D.: Saturn Flight-Control Systems. Astronaut. Aeron., May 1966, pp. 96-103.

46. Baines, D. J.; and Pearson, K. G.: Aeroelasticity as a Consideration in Aerodynamic Design of Rolling, Unguided Research Rockets. J. Spacecraft and Rockets, vol. 4, no. 12, Dec. 1967, pp. 1603-1608.

47. Zheludev, P. I.: Bending Flutter of Rotating Elongated Bodies. Mekhanika Tverdogo Tela, USSR, no. 2, 1966, pp. 160-165. M. Dublin, English trans., Faraday Press.

48. Crandall, S. H.; and Karnopp, D. C.: Dynamics of Mechanical and Electromechanical Systems. McGraw-Hill Book Co., Inc., 1968.

49. Runyan, H. L.; Pratt, K. G.; and Pierce, H. B.: Some Hydro-Elastic-Pneumatic Problems Arising in the Structural Dynamics of Launch Vehicles. ASME Paper 65-AV-27, presented at ASME Aviation and Space Conf. (Los Angeles), Mar. 14-18, 1965.

50. Hardy, G. H.; et al: A Detailed Study of Manual Backup Control Systems for the Saturn V Launch Vehicle. NASA TN D-5261, June 1969.

51. Smith, R. M.: Analysis and Design of Space Vehicle Flight Control Systems. Vol. X: Man in the Loop. NASA CR-829, July 1967.

52. Greensite, A. L.: Analysis and Design of Space Vehicle Flight Control Systems. Vol. XV: Elastic Body Equations. NASA CR-834, Aug. 1967.

53. Paddock, G. B.: Dynamic Stability of Space Vehicles. Vol. I: Lateral Vibration Modes. NASA CR-935, Nov. 1967.

54. Staley, J. A.: Dynamic Stability of Space Vehicles. Vol. II: Determination of Longitudinal Vibration Modes. NASA CR-936, Nov. 1967.

55. Gieseke, R.; Schuett, R.; and Lukens, D.: Dynamic Stability of Space Vehicles. Vol. III: Torsional Vibration Modes. NASA CR-937, Nov. 1967.

56. Anon.: Natural Vibration Modal Analysis. NASA Space Vehicle Design Criteria Monograph (Structures), NASA SP-8012, Sept. 1968.

57. Thomson, W. T.: Vibration Theory and Applications. Prentice-Hall, Inc., 1965.

58. Hurty, W. C.; and Rubinstein, M. F.: Dynamics of Structures. Prentice-Hall, Inc., 1964.

59. Hurty, W. C.: A Criterion for Selecting Realistic Natural Modes of a Structure. Tech. Memo. 33-364, Jet Prop. Lab., Nov. 1, 1967.

60. Wells, C. R.; and Hord, J. E.: Uprated Saturn I Full Scale Dynamic Test Correlation. Paper presented at the 39th Symposium on Shock and Vibration (Pacific Grove, Calif.), Oct. 22-24, 1968.

61. Saturn V Dynamic Test Vehicle Test-Analysis Correlation. Document No. D5-15722, The Boeing Co., Nov. 22, 1967.

62. Glaser, R. F.; and Beam, E. E.: Vibration Analysis of Clustered Launch Vehicles. NASA TN D-3090, Nov. 1965.

63. Loewy, R. G.; and Joglekar, M. M.: Matrix Holzer Analyses for Full-Coupled Vibrations to Clustered Launch-Vehicle Configurations Including Applications to the Titan III C and Uncoupled Saturn I Class. NASA CR-592, Dec. 1966.

64. Ringland, R. F.: Dynamic Stability of Space Vehicles. Vol. X: Exit Stability. NASA CR-944, Mar. 1968.

65. Greensite, A. L.: Analysis and Design of Space Vehicle Flight Control Systems. Vol. III: Linear Systems. NASA CR-822, July 1967.

66. Truxal, J. G.: Automatic Feedback Control System Synthesis. McGraw-Hill Book Co., Inc., 1955.

67. Savant, C. J.: Basic Feedback Control System Design. McGraw-Hill Book Co., Inc., 1958.

68. Greensite, A. L.: Analysis and Design of Space Vehicle Flight Control Systems. Vol. IV: Nonlinear Systems. NASA CR-823, July 1967.

69. Blackstone, J. H.: Current Design Technology of Attitude Control Systems for Large Launch Vehicles. AIAA Paper No. 68-845, presented at AIAA Guidance, Control, and Flight Dynamics Conf. (Pasadena), Aug. 12-14, 1968.

70. Westerwick, R. A.: Multiple Sensors Feasibility Study, Vols. I and II. Rept. ASD-TDR-63-378, Air Force Systems Command Flight Control Lab., June 1963.

71. Greensite, A. L.: Analysis and Design of Space Vehicle Flight Control Systems. Vol. XIII: Adaptive Control. NASA CR-832, Aug. 1967.

72. Andeen, R. E.: Self-Adaptive Autopilots. Space/Aeronaut. Apr. 1965, pp. 46-52.

73. Gelb, A.; and Vander Velde, W. E.: Multiple-Input Describing Functions and Nonlinear System Design. McGraw-Hill Book Co., Inc., 1968.

74. Greensite, A. L.: Analysis and Design of Space Vehicle Flight Control Systems. Vol. VI: Stochastic Effects. NASA CR-825, July 1967.

75. Greensite, A. L.: Analysis and Design of Space Vehicle Flight Control Systems. Vol. IX: Optimization Methods. NASA CR-828, July 1967.

76. Bryson, A. E.; and Ho, Y. C.: Applied Optimal Control. Blaisdell Co., Waltham, Mass., 1969.

77. Harvey, C. A.: Application of Optimal Control Theory to Launch Vehicles; Final Technical Report. 12073-FR1, Honeywell, Inc., July 1968.

78. Swaim, R. L.: A General Theory and Analysis of the Dynamic Stability of Flexible-Bodied Missiles. Air Force Tech. Documentary Rept. No. ASD-TDR-62-627, Oct. 1962.

79. Lukens, D. R.; Schmitt, A. F.; and Broucek, G. T.: Approximate Transfer Functions for Flexible-Booster-And-Autopilot Analysis. Air Force WADD TR-61-93, Apr. 1961.

80. Greensite, A. L.: Analysis and Design of Space Vehicle Flight Control Systems. Vol. I: Short Period Dynamics. NASA CR-820, July 1967.

81. Collette, J. G. R.: Analysis and Design of Space Vehicle Flight Control Systems. Vol. XI: Component Dynamics. NASA CR-830, July 1967.

82. Greensite, A. L.: Analysis and Design of Space Vehicle Flight Control Systems. Vol. V: Sensitivity Theory. NASA CR-824, July 1967.

83. Hyde, P. W.: AS-205 Engine Failure Modes, Rigid Body Control Study. Tech. Note TN-AP-68-306, Space Div., Chrysler Corp., Jan. 1968.

84. Hyde, P. W.: Saturn IB AS-205 Phase III Control System Design Analyses–Booster Flight. Tech. Note TN-AP-68-332, rev. A, Space Div., Chrysler Corp., Oct. 1968.

85. Lukens, D. R.: Dynamic Stability of Space Vehicles. Vol. IV: Full Scale Testing for Flight Control Parameters. NASA CR-938, Nov. 1967.

86. Lukens, D. R.: Dynamic Stability of Space Vehicles. Vol. V: Impedance Testing for Flight Control Parameters. NASA CR-939, Dec. 1967.

87. Lukens, D. R.; et al: Dynamic Stability of Space Vehicles. Vol. VI: Full Scale Dynamic Testing for Mode Determination. NASA CR-940, Dec. 1967.

88. Lukens, D. R.: Dynamic Stability of Space Vehicles. Vol. XIII: Aerodynamic Model Tests for Control Parameter Determination. NASA CR-947, May 1968.

89. Eggleston, D. M.: Dynamic Stability of Space Vehicles. Vol. XIV: Testing for Booster Propellant Sloshing Parameters. NASA CR-948, May 1968.

90. Wissman, J. W.: Dynamic Stability of Space Vehicles–Structural Dynamics Model Testing. NASA CR-1195, Sept. 1968.

91. Danos, L. A.; and Ivaska, J. P.: DSV-2L Body Bending Vibration Test Analysis. DAC Rept. No. 58300, Douglas Missile and Space Systems, June 1966.

92. Fontenot, L. L.: Dynamic Stability of Space Vehicles. Vol. VII: The Dynamics of Liquids in Fixed and Moving Containers. NASA CR-941, Mar. 1968.

93. Bauer, H. F.: Stability Boundaries of Liquid-Propelled Elastic Space Vehicles with Sloshing. J. Spacecraft and Rockets, vol. 3, no. 2, Feb. 1966, pp. 240-246.

94. Anon.: Flutter, Buzz, and Divergence. NASA Space Vehicle Design Criteria Monograph (Structures), NASA SP-8003, July 1964.

95. Van Dyke, M. D.: A Study of Second-Order Supersonic Flow Theory. NACA Rept. 1081, 1952.

96. Lavender, R. E.: Second-Order and Hybrid Supersonic Flow Theories with Modifications and a Detailed Computational Procedure. Rept. 6R1P, (PDL 36,647), Ordnance Missile Laboratories, Feb. 15, 1954.

97. Syvertson, C. A.; and Dennis, D. H.: A Second-Order Shock-Expansion Method Applicable to Bodies of Revolution Near Zero Lift. NACA Rept. 1328, 1957. (Supersedes NACA TN 3527.)

98. Dalzell, J. F.: Special Topics, Part I. Liquid Impact on Tank Bulkheads. The Dynamic Behavior of Liquids in Moving Containers, Ch. 10, NASA SP-106, 1966.

99. Environmental Design and Test Criteria for Space Launch Vehicle (SLV), Vehicle Borne and Aerospace Ground Equipment. Rept. 69-00202, Convair Div., General Dynamics Corp., Dec. 6, 1967.

100. Anon.: Prelaunch Ground Wind Loads. NASA Space Vehicle Design Criteria Monograph (Structures), NASA SP-8008, Nov. 1965.

101. Rose, A. G.; Staley, J. A.; and Simson, A. K.: A Study of System-Coupled Longitudinal Instabilities in Liquid Rockets. Part I: Analytical Model. Air Force AFRPL-TR-65-163, Sept. 1965.

102. Bikle, F. E.; Fidler, L. E.; and Hendricks, R. C.: System Coupled Dynamic Instability Amplitude Limiting Analysis and Evaluation. Final Report Parts I and II, Air Force AFRPL-TR-68-41, Mar. 1968.

103. Ragazzini, J. R.; and Franklin, G. F.: Sampled-Data Control Systems. McGraw-Hill Book Co., Inc., 1958.

NASA SPACE VEHICLE DESIGN CRITERIA MONOGRAPHS ISSUED TO DATE

SP-8001 (Structures)	Buffeting During Launch and Exit, May 1964
SP-8002 (Structures)	Flight-loads Measurements During Launch and Exit, December 1964
SP-8003 (Structures)	Flutter, Buzz, and Divergence, July 1964
SP-8004 (Structures)	Panel Flutter, May 1965
SP-8005 (Environment)	Solar Electromagnetic Radiation, June 1965
SP-8006 (Structures)	Local Steady Aerodynamic Loads During Launch and Exit, May 1965
SP-8007 (Structures)	Buckling of Thin-Walled Circular Cylinders, revised August 1968
SP-8008 (Structures)	Prelaunch Ground Wind Loads, November 1965
SP-8009 (Structures)	Propellant Slosh Loads, August 1968
SP-8010 (Environment)	Models of Mars Atmosphere (1967), May 1968
SP-8011 (Environment)	Models of Venus Atmosphere (1968), December 1968
SP-8012 (Structures)	Natural Vibration Modal Analysis, September 1968
SP-8013 (Environment)	Meteoroid Environment Model—1969 (Near Earth to Lunar Surface), March 1969
SP-8014 (Structures)	Entry Thermal Protection, August 1968
SP-8015 (Guidance and Control)	Guidance and Navigation for Entry Vehicles, November 1968
SP-8016 (Guidance and Control)	Effects of Structural Flexibility on Spacecraft Control Systems, April 1969
SP-8017 (Environment)	Magnetic Fields—Earth and Extraterrestrial, March 1969
SP-8018 (Guidance and Control)	Spacecraft Magnetic Torques, March 1969

SP-8019 (Structures)	Buckling of Thin-Walled Truncated Cones, September 1968
SP-8020 (Environment)	Mars Surface Models (1968), May 1969
SP-8021 (Environment)	Models of Earth's Atmosphere (120 to 1000 km), May 1969
SP-8023 (Environment)	Lunar Surface Models, May 1969
SP-8024 (Guidance and Control)	Spacecraft Gravitational Torques, May 1969
SP-8025 (Chemical Propulsion)	Solid Rocket Motor Metal Cases, April 1970
SP-8026 (Guidance and Control)	Spacecraft Star Trackers, July 1970
SP-8027 (Guidance and Control)	Spacecraft Radiation Torques, October 1969
SP-8028 (Guidance and Control)	Entry Vehicle Control, November 1969
SP-8029 (Structures)	Aerodynamic and Rocket-Exhaust Heating During Launch and Ascent, May 1969
SP-8031 (Structures)	Slosh Suppression, May 1969
SP-8032 (Structures)	Buckling of Thin-Walled Doubly Curved Shells, August 1969
SP-8033 (Guidance and Control)	Spacecraft Earth Horizon Sensors, December 1969
SP-8034 (Guidance and Control)	Spacecraft Mass Expulsion Torques, December 1969
SP-8035 (Structures)	Wind Loads During Ascent, October 1969
SP-8046 (Structures)	Landing Impact Attenuation for Non-Surface-Planing Landers, April 1970

NASA-Langley, 1970 —— 31