NASA
SPACE VEHICLE
DESIGN CRITERIA
(GUIDANCE AND CONTROL)

NASA SP-8058

SPACECRAFT AERODYNAMIC TORQUES

PROPERTY OF
MARSHALL LIBRARY
A&TS-MS-IL

JANUARY 1971

NATIONAL AERONAUTICS AND SPACE ADMINISTRATION

GUIDE TO THE USE OF THIS MONOGRAPH

The purpose of this monograph is to organize and present, for effective use in spacecraft development, the significant experience and knowledge accumulated in development and operational programs to date. It reviews and assesses current design practices, and from them establishes firm guidance for achieving greater consistency in design, increased reliability in the end product, and greater efficiency in the design effort. The monograph is organized into three major sections that are preceded by a brief introduction and complemented by a set of references.

The State of the Art, section 2, reviews and discusses the total design problem, and identifies *which* design elements are involved in successful design. It describes succinctly the current technology pertaining to these elements. When detailed information is required, the best available references are cited. This section serves as a survey of the subject that provides background material and prepares a proper technological base for the *Design Criteria* and *Recommended Practices.*

The *Design Criteria,* shown in section 3, state clearly and briefly what rule, guide, limitation, or standard must be considered for each essential design element to insure successful design. The *Design Criteria* can serve effectively as a checklist for the project manager to use in guiding a design or in assessing its adequacy.

The *Recommended Practices,* shown in section 4, state how to satisfy each of the criteria. Whenever possible, the best procedure is described; when this cannot be done concisely, appropriate references are provided. The *Recommended Practices,* in conjunction with the *Design Criteria,* indicate how successful design may be achieved.

The design criteria monograph is not intended to be a design handbook, a set of specifications, or a design manual. It is a summary and a systematic ordering of the large and loosely organized body of existing successful design techniques and practices. Its value and its merit should be judged on how effectively it makes that material available and useful to the user.

FOREWORD

NASA experience has indicated a need for uniform design criteria for space vehicles. Accordingly, criteria are being developed in the following areas of technology:

Environment
Structures
Guidance and Control
Chemical Propulsion

Individual components of this work will be issued as separate monographs as soon as they are completed. This document, "Spacecraft Aerodynamic Torques," is one such monograph. A list of all monographs in this series issued prior to this one can be found on the last page of this document.

These monographs are to be regarded as guides to design and not as NASA requirements, except as may be specified in formal project specifications. It is expected, however, that the criteria sections of these documents, revised as experience may indicate to be desirable, eventually will be uniformly applied to the design of NASA space vehicles.

This monograph was prepared under the cognizance of the NASA Electronics Research Center and published by the Jet Propulsion Laboratory. Robert Lyle and Pericles Stabekis of Exotech, Inc., were the principal authors. Major contributions were made by Dr. Lee Sentman of the University of Illinois, and R. Passamaneck of the Jet Propulsion Laboratory.

The effort was guided by an advisory panel consisting of the following individuals:

J. P. C. Clark	The Boeing Co.
D. B. DeBra	Stanford University
B. M. Dobrotin	Jet Propulsion Laboratory, California Institute of Technology
R. E. Fischell	Applied Physics Laboratory, Johns Hopkins University
A. J. Fleig	NASA Goddard Space Flight Center
D. C. Fosth	The Boeing Co.
J. A. Gatlin	NASA Goddard Space Flight Center
H. Perkel	RCA, Princeton, N. J.
R. E. Roberson	Consultant, Fullerton, Calif.
A. E. Sabroff	TRW Systems Group
E. D. Scott	Lockheed Missiles & Space Co.
B. E. Tinling	NASA Ames Research Center
P. C. Wheeler	TRW Systems Group

Contributions in the form of design and development practices were provided by many other engineers of NASA and the aerospace industry.

Comments concerning the technical content of these monographs will be welcomed by the National Aeronautics and Space Administration, Office of Advanced Research and Technology (Code RE), Washington, D.C. 20546.

January 1971

CONTENTS

1. INTRODUCTION 1

2. STATE OF THE ART 2

2.1 General 2

2.2 Historical Background 2

2.3 Flight Experience 3

2.4 Evaluation of Surface Interaction With the Atmosphere 4

2.5 The Atmosphere at Orbital Altitudes 13

2.6 Vehicle Characteristics 13

2.7 Testing 14

2.8 Summary 15

3. DESIGN CRITERIA 15

3.1 Aerodynamic Torque Analysis 15

3.2 Evaluation of Aerodynamic Torque Effects 17

3.3 Control of Aerodynamic Torque 17

4. RECOMMENDED PRACTICES 17

4.1 Aerodynamic Torque Analysis 17

4.2 Minimization of the Effects of Aerodynamic Torques 20

APPENDIX A: RELATIVE MAGNITUDES OF SPACECRAFT ENVIRONMENTAL TORQUES 23

APPENDIX B: DEFINITIONS OF THE ACCOMMODATION AND MOMENTUM EXCHANGE COEFFICIENTS 25

APPENDIX C: NOMENCLATURE 27

REFERENCES 29

NASA SPACE VEHICLE DESIGN CRITERIA MONOGRAPHS ISSUED TO DATE 31

SPACECRAFT AERODYNAMIC TORQUES

1. INTRODUCTION

In the design of spacecraft attitude control systems all torques which tend to disturb the attitude of a spacecraft must be considered. One of these is the aerodynamic torque resulting from the impingement of atmospheric gas molecules on spacecraft surfaces.

Determination of the atmospheric torque requires knowledge regarding

(1) The atmosphere and its motion resulting from the Earth's rotation

(2) The spacecraft aerodynamic and mass characteristics

(3) The interaction of the spacecraft with the atmosphere and the relative velocity of the spacecraft with the atmosphere

Aerodynamic torques diminish rapidly as the orbital altitude is increased. In general, for spacecraft in Earth orbit, the radiation force on a given surface becomes more significant than the aerodynamic force at orbital altitudes above 1000 km. Conversely, below 600 km aerodynamic forces usually predominate. Between 600 and 1000 km, torques resulting from solar radiation and aerodynamic forces are likely to be of the same order of magnitude. However, the aerodynamic forces on the spacecraft, from which the aerodynamic torques originate, are the main factors in the determination of spacecraft orbital lifetime.

The aerodynamic torque may be an important consideration in the determination of spacecraft attitude motion, control actuator sizing, and fuel requirements. Control or minimization of atmospheric drag torques requires that attention be given to the geometry and characteristics of the external surface of the spacecraft, particularly the configuration and surface properties of extended structures such as large solar arrays, antennas, and booms.

The scope of this monograph is limited to the assessment and accommodation of disturbance torques due to the interaction of spacecraft with the atmosphere in comparitively long duration orbits. This typically means flight in the free molecular flow regime which occurs at Earth altitudes of 120 km or greater. Atmospheric models for Earth, Mars, and Venus recommended for use are given in other monographs (refs. 1 to 4).

Criteria and recommended practices for the assessment and control of magnetic, gravitational, radiation, and mass expulsion disturbance torques are given in other monographs (refs. 4, 5, 6, and 7, respectively). The relative magnitudes of environmental disturbance torques on an Earth satellite are briefly presented in appendix A. Dynamic effects resulting from the coupling and interaction of disturbance torque effects with the spacecraft control system are treated in reference 8.

2. STATE OF THE ART

2.1 General

The interaction between a body and an atmosphere through which it is moving has been studied for centuries and the accumulated knowledge composes the technology of aerodynamics. The particular part of this technology that has importance to problems of attitude stabilization of spacecraft relates to the disturbance torque which may be caused by the interaction of a vehicle with the rarefied atmosphere at orbital altitudes.

At orbital altitudes, the interaction of the vehicle and the very rarefied atmosphere can best be characterized by the free-molecular flow regime of gas dynamics, i.e., when the molecular mean free path is much greater than a characteristic spacecraft dimension. For spacecraft of approximately 1-m cross-sectional diameter, this condition is satisfied for altitudes above 120 km.

2.2 Historical Background

Rarefied gas dynamics has been the subject of numerous investigations since the time of Maxwell. The early studies were limited to cases of very low speeds and, generally, to "internal" flow geometries associated typically with vacuum installations. Since about 1946, the possibility of flight at high altitudes and high speeds prompted renewed interest and activity in the field. A number of experimental and theoretical results were obtained, with emphasis on the aerodynamic problem of high-speed flow of a rarefied gas past a body (ref. 9).

In rarefied gas flow, the length of the molecular mean free path, λ, is comparable to some significant flow field dimension ℓ. For the considerations of this monograph, ℓ is a characteristic dimension of the spacecraft. The dimensionless ratio λ/ℓ is called the Knudsen number and is denoted by K. The Knudsen number serves as a criterion for the division into various flow regimes. Thus, for $K<10^{-2}$ the flow is classified as "continuum flow;" for $10^{-2}< K<10^{-1}$, "slip flow;" for $10^{-1}< K<10$, "transition flow;" and for $K> 10$, "free-molecular flow." In some cases, primarily blunt bodies, free-molecular flow may exist down to $K = 3$.

Early theories concerning interactions of impinging particles on surfaces have been based either on a quantum or classical formulation of the interaction. Representative of the quantum approach are the works of Jackson (ref. 10) and Devonshire (ref. 11). These earlier wave mechanics theories, however, suffer from the inability to deal successfully with realistic interactions, particularly of the heavier gases. This was pointed out by Zwanzig (ref. 12) and Goodman (ref. 13), whose works are representative of the classical treatment of the problem.

Observations of rarefied gas flows relating to problems of molecular interaction at the surface were first made near the turn of the century.

In early experiments by Millikan (ref. 14) the drag on a rotating cylinder due to the impact of molecules of rarefied gas was treated in terms of a parameter representing the exchange of tangental momentum between the cylinder wall and the incident particles. This parameter was related to the Maxwellian concepts of specular and diffuse reflection of light and is identified as the coefficient of tangental momentum exchange σ_t.

Another parameter introduced in this period was the accommodation coefficient for thermal energy α. This coefficient was introduced by Knudsen in his efforts to interpret experiments on the transfer of thermal energy from a fine wire (also discussed in ref. 14). Both Millikan's and Knudsen's experiments were performed under large Knudsen number conditions (free-molecular flow). The use of the two coefficients, σ_t and α, proved so successful that all free-molecule kinetic theory involving surface phenomena remains formulated in these terms. A third coefficient, σ_n, the coefficient of normal momentum exchange, was first introduced by Schaaf and Chambre (ref. 15) in 1958. These terms σ_t, σ_n, and α are defined in appendix B.

2.3 Flight Experience

The early "paddlewheel" satellites (with solar cell arrays deployed like large windmill airfoils), produced some of the first flight experiences with aerodynamic disturbance torques. These satellites were designed to study the magnetosphere and the solar wind, and it was only coincidental that they revealed information about the interaction of the satellite's surfaces with the atmosphere.

When the first of these satellites, Explorer 6, was designed, it was expected that the momentum of the atmospheric molecules reemitted by its surface would be described by Maxwell's classical model, with approximately 95 percent of the molecules diffusely reflected. A postflight analysis, however, revealed that the spin had decayed three times faster than expected, and one order of magnitude faster than would have occurred if the reemission had been completely diffused and accommodated (ref. 16). The Explorer 6 results were not published and, as a result, designers continued to underestimate the aerodynamic torques on paddlewheel satellites. This lack of documentation resulted in similar problems for Ariel 2, many of whose experiments became inoperative after 3 months because of the rapid decay of the spin, and the consequent attitude drift (ref. 17). After the experience with Ariel 2, designers used higher perigee altitudes for paddlewheel satellites, thus reducing the aerodynamic torques.

Explorer 17 also experienced a decay of its spin rate attributed to the propeller mode aerodynamic effect. Because the despin torque was due entirely to reemission momentum and the orbit decay was caused by the combination of incident and reemitted momenta, the data from the combined decay effects has been used to study surface interaction effects independent of the actual atmospheric density (ref. 17).

The Orbiting Solar Observatory satellite (OSO 1) was subjected to aerodynamic forces which acted to roll the spacecraft about the solar vector and to precess the spin axis away from the desired pitch position, i.e., normal to the solar vector (ref. 18). This effect was corrected by the attitude control system in flight operations.

Little is known about the Soviet flight experience; however, in commenting upon the spin decay of Sputnik 1, Warwick attributed the reduction of spin velocity to atmospheric friction acting on the long antennas of the satellite (ref. 19, p. 155).

2.4 Evaluation of Surface Interaction With the Atmosphere

The aerodynamic disturbance torque acting on an orbiting spacecraft is the net sum of the individual torques acting about its center of mass. In many cases, the aerodynamic torque is insignificant when compared to other disturbance torques. For this reason, simple calculations are often made to obtain conservative estimates of the aerodynamic torque levels. Should these simple calculations indicate that the net aerodynamic torque is significant when compared to other disturbance torques, then more complex, but more accurate, methods are employed.

2.4.1 Aerodynamic Force

In the rarefied atmosphere at orbital altitudes, the gas molecules that hit the spacecraft are reemitted and travel far before colliding with other molecules. In this regime of free molecular flow gas dynamics, the effect of the reemitted particles on the incident stream can be neglected, at least so far as subsequent effects on the spacecraft are concerned. Therefore, for the purposes of this monograph, the incident flow is considered to be undisturbed by the presence of the spacecraft.

This noninteraction of the incident and reemitted particles allow the net aerodynamic torque to be calculated by summing up the torque contributions of each of the spacecraft elements. Thus, the vehicle may be dissected into simple subshapes to facilitate estimation of the aerodynamic forces. Summing these forces gives the result for the entire spacecraft.

However, before this dissection process is undertaken, an approximation of the total aerodynamic force acting on the vehicle is often used to obtain a conservative estimate of the aerodynamic torque. The gross value of the aerodynamic force for each applicable vehicle orientation may be obtained using the following expression:

$$F = \frac{1}{2} C_D \rho V^2 A \tag{2-1}$$

where

F = total aerodynamic force
ρ = atmospheric density
A = projected area of spacecraft element normal to the incident flow

V = spacecraft velocity

C_D = drag coefficient, which for the purposes of a conservative estimate of the force is generally assumed to have a value of 2.6

It should be noted that for the calculation of spacecraft lifetime a more accurate drag coefficient must be used. For calculations of spacecraft lifetimes, see reference 20.

A better approximation of the total aerodynamic force can be obtained by using simplified particle/surface interaction models, based on free-molecular flow theory. Applying one of the most commonly used interaction models (ref. 21), the aerodynamic force on an elemental area is:

$$d\mathbf{F} = -\rho V^2 \left[(2 - \sigma_n - \sigma_t)(\mathbf{e}_v \cdot \mathbf{e}_n)^2 \mathbf{e}_n + \sigma_t (\mathbf{e}_v \cdot \mathbf{e}_n) \mathbf{e}_v\right] dA \tag{2-2}$$

where

σ_n = normal momentum exchange coefficient

σ_t = tangential momentum exchange coefficient

$\mathbf{e}_v$ = unit spacecraft velocity vector

$\mathbf{e}_n$ = outward unit vector normal to dA

The linear relationship between $d\mathbf{F}$ and the atmospheric density ρ indicated by the above expression, as well as other interaction models, calls for an accurate model of atmospheric density. The momentum exchange coefficients are generally considered to be functions of the surface material of the spacecraft. However, for this approximation, an empirical value of 0.8 has been used for σ_t and σ_n.

When the use of such approximations indicates that the aerodynamic force is significant, as compared to other environmental forces, a more detailed calculation may be necessary. Such a calculation goes beyond empirical estimates of the surface interaction and requires an understanding of the basic physics of particle interactions that depend on surface roughness, temperature, and composition of both the gas and the surface. The differential force dF for an arbitrarily oriented surface element dA, in terms of direction cosines (ref. 22), is:

$$dF = \left\{\frac{1}{2}\rho V^2 \left(\left[\sigma_t(\epsilon k + \eta t) + (2 - \sigma_n)\zeta p\right]\left[\zeta(1 + \operatorname{erf}\zeta S) + \frac{1}{S\sqrt{\pi}}\exp(-\zeta^2 S^2)\right]\right.\right.$$
$$\left.\left. + \frac{(2 - \sigma_n)}{2S^2} p(1 + \operatorname{erf}\zeta S) + \frac{\sigma_n p}{2}\sqrt{\frac{T_w}{T_i}}\left[\frac{\zeta\sqrt{\pi}}{S}(1 + \operatorname{erf}\zeta S) + \frac{1}{S^2}\exp(-\zeta^2 S^2)\right]\right)\right\} dA \tag{2-3}$$

where

dF = component of the force in the direction specified by the direction cosines k, p, t

ϵ, ζ, η = direction cosines specifying the orientation of the incident velocity vector $\mathbf{V}$ (see fig. 1)

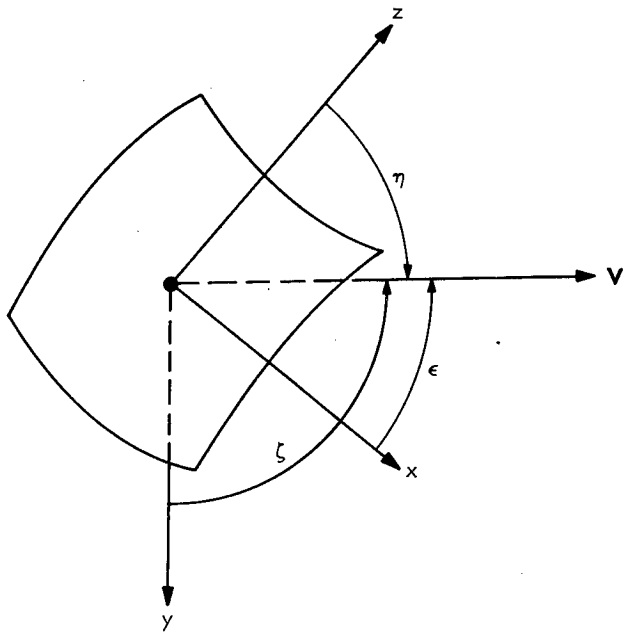

Figure 1.–Definition of the direction cosines ϵ, ζ, η of the velocity vector **V** with the spacecraft axes.

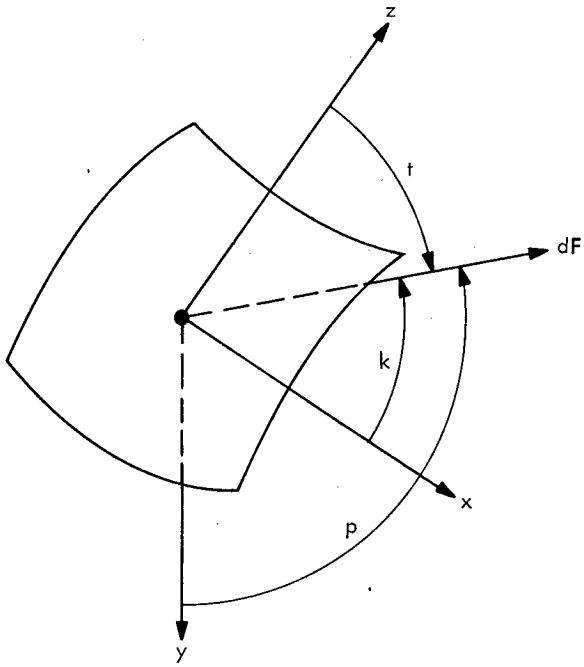

Figure 2.–Definition of the direction cosines k, p, t of the aerodynamic force vector with the spacecraft axes.

k, p, t = direction cosines specifying the direction of dF (see fig. 2)

$$S = \text{molecular speed ratio} = \frac{V}{\sqrt{\frac{2RT_i}{m}}}$$

R = gas constant

m = molecular weight

T_i = temperature of incident molecules

T_w = surface temperature

$$\operatorname{erf}(\zeta S) = \frac{2}{\sqrt{\pi}} \int_0^{\zeta S} e^{-(x)^2} dx$$

$$\exp(-\zeta^2 S^2) = e^{-\zeta^2 S^2}$$

The direction cosines k, p, t for the aerodynamic force are the cosines between the force vector and the x, y, z coordinates, respectively. Similarly, the direction cosines ϵ, ζ, η for the velocity vector are the cosines between the velocity vector and the x, y, z coordinates, respectively. The reference frame, the x, y, z coordinate system, is arbitrary and need not be orthogonal. The convenience of using an orthogonal coordinate system is that the three components of velocity or force (if desired) are mutually perpendicular and independent of each other. The orientation of the coordinate system on the spacecraft is also arbitrary; however, if the system is oriented so that the y-axis is normal to the body surface at a convenient point, then the angle of attack, θ, is the angle whose cosine is equal to ζ.

The total force acting on the spacecraft can be obtained by integrating dF over the entire spacecraft surface. It should be noted that dF is the net force acting on dA, combining the force components due to both incident and reemitted molecules. Equation (2-3) shows that the net force generally depends on the normal momentum exchange coefficient σ_n as well as on the ratio of surface temperature T_w to the incident temperature T_i and hence on the thermal accommodation coefficient α. In practice, it is frequently assumed that the reflection is completely diffuse ($\sigma_n = 1$) and that the surface temperature T_w is uniform.

In a more realistic calculation, the surface temperature distribution due to effects of accommodation and reemission should be determined taking into account the internal conduction and external radiation characteristics of the body. This is done by establishing a heat balance for the spacecraft which will give the net heat flow rate. For a complete discussion of the heat flow due to accommodation and reemission as well as how to apply it, see ref. 9. The force should then be integrated over the surface using appropriate local values of the momentum exchange coefficients and surface temperature.

2.4.2 Aerodynamic Torque

When the expression given by equation (2-1) is used to evaluate the aerodynamic force, the aerodynamic torque is, in turn, estimated by the following expression:

$$L_a = \ell F \tag{2-4}$$

where

L_a = total aerodynamic torque

ℓ = moment arm

and

F is as given by equation (2-1)

For the purposes of conservatively estimating the torque from this model, the moment arm ℓ is assumed to be at least one-third of the spacecraft's maximum dimension, including all appendages, even if the spacecraft is symmetrical, and greater if the projected area centroid and center of mass are farther apart. The center of pressure is a useful concept that may be applied to estimate aerodynamic torques at the outset of a problem. The center of projected area may be used as the line of action of the aerodynamic force as a first approximation, recognizing the variable way in which the flow interacts with the surface at different locations. A conservative estimate for the moment arm is used (i.e., no less than one-third the vehicle's maximum dimension).

Evaluation of the aerodynamic torque through the application of the simplified particle-surface interaction model defined by equation (2-2) or the more exact expression for the aerodynamic force given by equation (2-3) involves the calculation of the torque contribution from the various surfaces of the spacecraft. The usual procedure is to approximate these surfaces by means of simple geometric shapes (planes, cylinders, cones, spheres, etc.) so that the resulting surface integrals may be readily evaluated. If $\overline{\ell}_i$ is the vector from the spacecraft center of mass to an infinitesimal area dA_i on the surface acted upon by a differential force $d\mathbf{F}_i$, then the torque contribution from this surface is

$$\mathbf{L}_{ai} = \int_{\text{surface}} \overline{\ell}_i \times d\mathbf{F}_i \tag{2-5}$$

The total aerodynamic torque on the spacecraft is then obtained from the vector sum of the torques on the elementary shapes which approximate the spacecraft, i.e.,

$$\mathbf{L}_a = \sum_{i=1}^{n} \mathbf{L}_{ai} \tag{2-6}$$

where n is the number of surfaces chosen to model the spacecraft.

The torque calculation can be complicated if successive interaction of the flow from one surface onto another is considered. This may be an important consideration for low Knudsen numbers and concave surfaces.

Torques on paddlewheel satellites have shown the importance of considering more accurate models of the aerodynamic interaction than the noninteracting model for incident and reemitted particles. For crude estimates, a process similar to the modelings used with equations (2-1) and (2-4) may be used. The force term can be taken as $(1 + r)$ times the force of the incident momentum change, where r is the ratio of the speed of reemitted molecules to the speed of incident molecules. The torque is then evaluated assuming an appropriate moment arm. This torque is contained as a component of L_a in equation (2-6); therefore, equation (2-6) is valid when the more exact models defined by equations (2-2) and (2-3) are employed.

2.4.3 Aerodynamic Coefficients in Free Molecular Flow

It is generally convenient to express the results of aerodynamic force and torque analyses in terms of a drag coefficient, C_D,[1] and a moment coefficient, C_M. These coefficients are given by

$$C_D = \frac{F}{\frac{1}{2}\rho V^2 A} \tag{2-7}$$

and

$$C_M = \frac{L_a}{\frac{1}{2}\rho V^2 A \ell} \tag{2-8}$$

Since a body in free-molecular flow does not disturb the flow, a complicated shape can be resolved into simple parts, and the contributions of each of these parts can be added together to obtain the coefficients for the entire spacecraft. Thus, it is generally sufficient to determine the aerodynamic coefficients for simple shapes, i.e., flat plates, cylinders, cones, etc.

When the speed of a spacecraft is large, relative to the random thermal motion of the molecules, the flow may be described as hyperthermal. Care must be exercised when hyperthermal flow is assumed and the random thermal motion of the molecules neglected for calculating aerodynamic coefficients for approximate models. Unacceptable errors in drag and moment coefficients will result when the spacecraft has large surfaces that are almost parallel to the flow. These errors arise from the tangential momentum exchange which is due to the random thermal motion of the molecules. The error introduced by this assumption is discussed further in references 23 and 24. Table 1 (ref. 23) lists the drag coefficients of spacecraft in hyperthermal free-molecular flow for certain simple shapes. The drag coefficients are listed in terms of the ratio r of the speed of reemitted molecules v_r to the speed of incident molecules v_i. The dependence of the drag coefficient on the thermal accommodation coefficient α is illustrated in figure 3 for a flat plate in hyperthermal free-molecular flow with the angle of attack θ as the parameter.

[1]The drag coefficient is often expressed in terms of an axial force coefficient C_A and a normal force coefficient C_N: $C_D = C_A \cos\theta + C_N \sin\theta$, where θ is the spacecraft angle of attack with respect to $\mathbf{V}$.

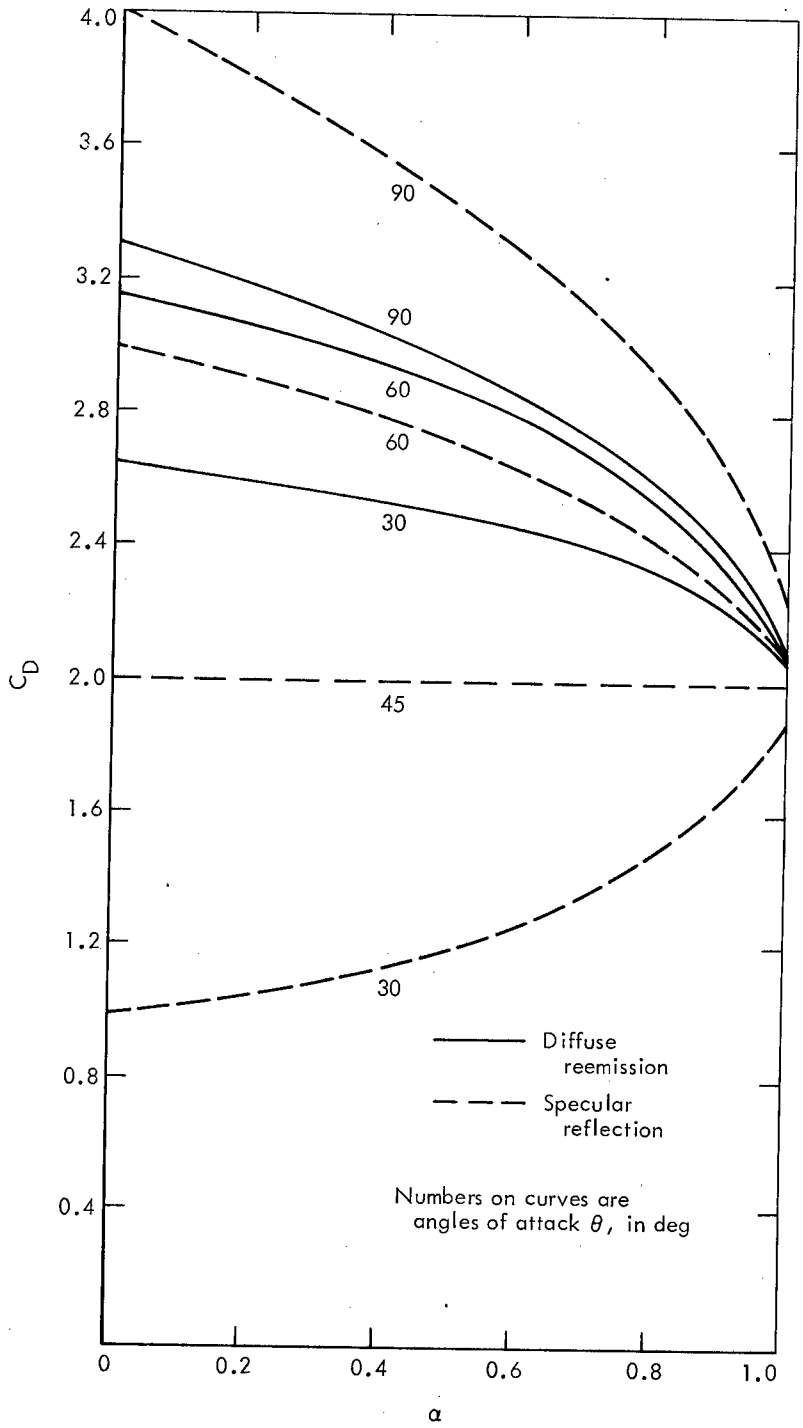

Figure 3.–Drag coefficient of a flat plate in hyperthermal free-molecule flow. The drag coefficient is based on the projected area perpendicular to the direction of the motion.

TABLE 1. Drag Coefficient in Hyperthermal Free-Molecule Flow (ref. 23)

Shape	Drag coefficient, C_D (based on projected area perpendicular to direction of motion)	
	Diffuse reemission	Specular reflection
Flat plate (normal to flow)	$2\left(1+\frac{2}{3}r\right)$	$2(1+r)$
Flat plate (at angle of attack θ)	$2\left(1+\frac{2}{3}r\sin\theta\right)$	$2(1-r\cos 2\theta)$
Sphere	$2\left(1+\frac{4}{9}r\right)$	2
Cylinder (perpendicular to flow)	$2\left(1+\frac{\pi}{6}r\right)$	$2\left(1+\frac{1}{3}r\right)$
Cone of semivertex angle ψ with vertex forwards and axis parallel to flow	$2\left(1+\frac{2}{3}r\sin\psi\right)$	$2(1-r\cos 2\psi)$

When a more exact calculation of the aerodynamic coefficients is needed, the random thermal motion of the atmospheric molecules should be included. Reference 22 gives a detailed analysis of such treatment and presents aerodynamic coefficients obtained for certain simple shapes. These results also include the effects of self-shading, such as the shading of the back side of a cylinder by its front side. Self-shading effects are also included in equation (2-3), but not the shading of one subshape by another.

The shading mentioned above is the part of the spacecraft that has been blocked from the incident flow due to another part of the spacecraft. There are two commonly used methods for estimating shading. One method is to use "light-ray" shading. In this method, the "light" is assumed to be a beam parallel to the flow velocity of the incident molecules. Any subshape or part thereof that falls in the shadow cast by another subshape is assumed completely shadowed from the incident flow and, hence, yields no contribution to the drag or moment coefficients. The second method considers the random motion of the molecules superimposed upon the flow velocity. Consequently, the molecules penetrate into the "light-ray" shadow as described above. The amount of this penetration is approximated by the angle $\tan^{-1} 1/S$, as shown in figure 4. As $S \rightarrow \infty$, the penetration is nonexistent and "light-ray" shading results, thus light-ray shading is valid for a very large speed ratio. As $S \rightarrow 1$, the penetration angle approaches 45° and should be considered as the lower limit of validity since filling of the shaded region can occur through the random motion of the molecules.

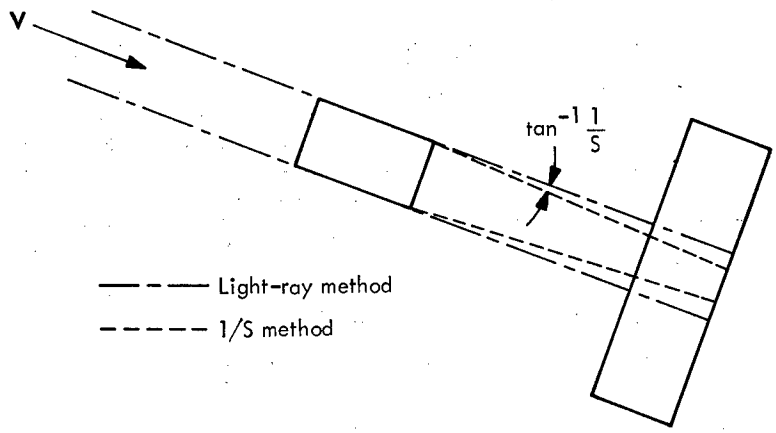

Figure 4.–Light-ray and 1/S shadow lines.

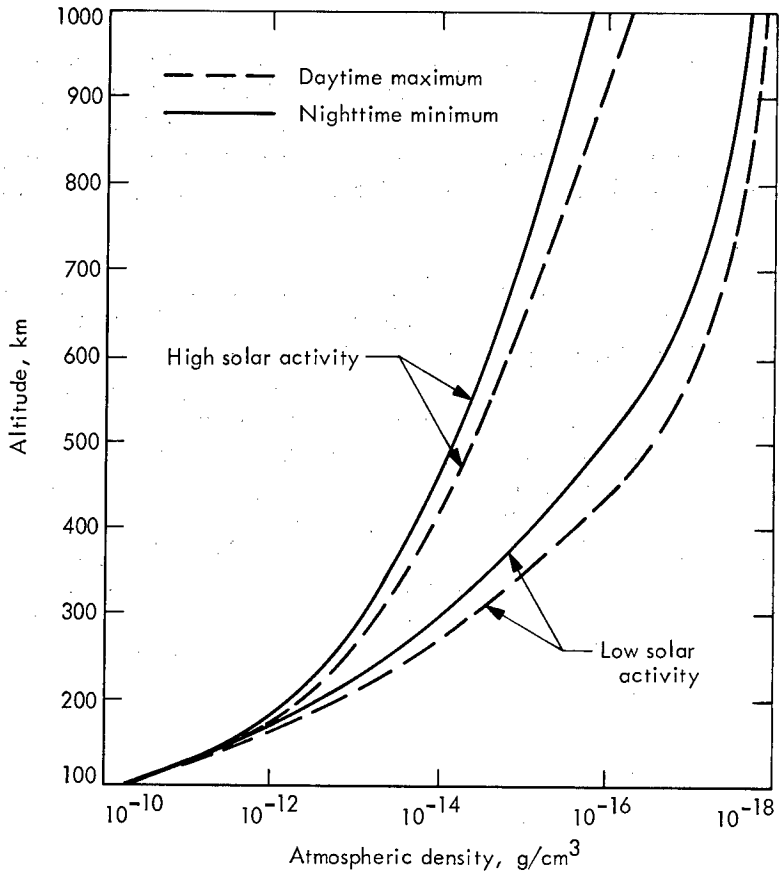

Figure 5.–Daytime maximum and nighttime minimum atmospheric density profiles for high and low solar activity levels.

2.5 The Atmosphere at Orbital Altitudes

Atmospheric conditions encountered by a spacecraft in an Earth orbit are of great importance to the study of aerodynamic forces and torques. The torques resulting from the interaction between the spacecraft and the atmosphere are determined to a large extent by atmospheric density. It is essential that accurate atmospheric models be used which provide atmospheric density as well as chemical composition and temperature. Two such models for the Earth's atmosphere are presented in reference 1 — the Jacchia's modified model, developed in 1967, and the Quick-Look Density model. The former is a detailed computerized model which can describe the atmosphere from altitudes of 120 to 1000 km for any time and spatial location. Figure 5 shows four atmospheric density profiles provided by this model and also shows the importance of the sunspot cycle on density. The Quick-Look Density model was developed mainly for preliminary mission planning and provides an estimate of the expected atmospheric density at the planned orbital altitude without the use of a computer.

2.6 Vehicle Characteristics

The interaction of a spacecraft with the atmosphere is largely affected by several of the spacecraft's characteristics. Thus, there is a functional dependence of the aerodynamic torque on the vehicle's configuration, the attitude angles, the location of the center of mass relative to the center of pressure, and the surface properties.

The shape of the spacecraft and the attitude angles, which relate the orientation of the geometric axes to the flow vector, are necessary for torque calculations since the angle of attack required in the expressions given for the aerodynamic force and torque is directly related to them. Typically, the nominal attitude angles (assuming perfect control) are selected.

The location of the spacecraft center of mass relative to the center of pressure may be useful when considering aerodynamic torques. The center of pressure can be calculated from the equation

$$X_{cp} - X_{cm} = \frac{L_{a_x}}{F_{n_x}} = \frac{C_M}{C_N}\,\ell_{\text{ref}} \tag{2-9}$$

where

X_{cp} = the distance of the center of pressure from a designated reference point

X_{cm} = the distance of the center of mass from the same reference point

L_{a_x} = the aerodynamic torque about the x-axis

F_{n_x} = the aerodynamic force component normal to the flow; i.e., $[(\Sigma F_y)^2 + (\Sigma F_z)^2]^{1/2}$

C_M = the moment coefficient

C_N = the normal force coefficient

ℓ_{ref} = the reference length (moment arm)

In equation (2-9) it should be noted that X_{cp}, X_{cm}, and the reference point must be colinear. To avoid confusion, the reference point may be taken as X_{cm}. Equation (2-9) shows that, to calculate X_{cp}, it is first necessary to calculate L_{a_x} and F_{n_x}. Thus, the center of pressure is a derived result and, generally, is not calculated in practice. It is evident from this equation that it cannot represent torque components parallel to the incident force. Therefore if needed, $Y_{cp} - Y_{cm} = L_{a_y}/F_{n_y}$ and $Z_{cp} - Z_{cm} = L_{a_z}/F_{n_z}$ can be calculated, where L_{a_y}, L_{a_z}, F_{n_y}, and F_{n_z} have analogous definitions to L_{a_x} and F_{n_x} as given above.

Other spacecraft surface characteristics of importance include the atomic composition of the outermost layer as well as its temperature distribution. The thermal accommodation coefficient α is dependent on the ratio of the mass of the incident gas atoms to the mass of the surface atoms. Thus, a rigorous analysis of the interaction is dependent on knowledge of the surface layer of atoms. For a critical survey of thermal accommodation coefficients, see reference 25.

2.7 Testing

There are no presently available testing techniques for determining, prior to flight, the effects of spacecraft interaction with the environment in which it will operate. Particular areas which have hindered the development of adequate testing techniques include simulation of the environment at orbital altitude and measurement of the distribution of reflected molecule flux and energy.

Experimental research of molecule/surface interactions has been done with nozzle-generated molecular beams to produce a high-speed ratio collisionless beam (ref. 26). Efforts to increase the stagnation temperature and lower the mean molecular weight of the source gas mixture, so that Earth orbital velocity beams can be produced, are continuing. Molecular beam experimentation, performed in the late 1950's and early 1960's with apparatus not quite capable of simulating the orbital environment, yielded values for the accommodation coefficients lower than those indicated by past flight experience (ref. 27).

Recent efforts for better Earth orbital simulation include the development of a partially dissociated atomic oxygen beam (ref. 26). The development of this beam represents a major step toward complete compositional simulation since atomic oxygen is the predominant constituent of the atmosphere for the orbital altitudes where aerodynamic effects are strong.

2.8 Summary

Flight experience has shown that aerodynamic torques can significantly disturb the attitude of a spacecraft, particularly by affecting the spin rate, and therefore must be considered in the design of the spacecraft's attitude control system. Aerodynamic torque is an important consideration in the design of large spacecraft and gravity-stabilized satellites with a perigee altitude ranging between 120 to 1000 km. Aerodynamic forces in this altitude range are calculated using free-molecular flow theory. At altitudes above 1000 km the radiative force dominates compared with aerodynamic torques. Down to altitudes of 600 km, the radiative force is of the same order of magnitude as the aerodynamic force and, therefore, must be included in the calculations. Below an altitude of 120 km, the aerodynamic forces become large and, hence, the lifetime of the spacecraft would be very short. Also, below 120 km, the assumption of free-molecular flow theory may not be valid. Analytical techniques for determining the aerodynamic torque require several simplifying assumptions and approximations to make the problem solvable by numerical techniques. The results, however, are sufficiently accurate to enable prediction of a spacecraft's performance and lifetime.

3. DESIGN CRITERIA

Disturbance torques arising from aerodynamic forces acting on spacecraft surfaces must be accounted for in the design of attitude control systems. It should be demonstrated that the aerodynamic torques acting in combination with all other disturbance torques do not degrade the performance of the attitude control system. When it is determined that aerodynamic disturbance torques may be an important factor in the attitude control system performance, procedures for minimizing or accommodating associated torques should be initiated and followed during the spacecraft design, development, and fabrication.

3.1 Aerodynamic Torque Analysis

The aerodynamic torque should be determined at sufficient points in the orbit and times of the year to generate a profile of the torque under all operating conditions. Care should be taken not to eliminate calculation of maximum and minimum torque values that would occur at apogee and perigee or at given times of the year.

3.1.1 Environment

The atmosphere chosen for making calculations of aerodynamic torques on orbiting spacecraft should be sufficiently accurate so as not to cause errors greater than the maximum error determined by attitude control system performance. A secondary criterion that should be considered is the ease with which the atmospheric model may be applied.

3.1.2 Surface Orientation

Each part of the spacecraft should be represented by the simplest possible subshape for aerodynamic torque calculations. Only surfaces exposed to the flow ($\boldsymbol{e}_v \cdot \boldsymbol{e}_n \geq 0$) should be considered at any particular time. The flow vector must always be kept in proper orientation to the subshape of interest.

3.1.3 Center of Pressure

The distance between the spacecraft's center of mass and center of pressure should be estimated for various spacecraft orientations relative to the flow vector, since the center of pressure will move depending on the orientation. The estimated center of pressure should always be made conservative in the light of aerodynamic torque; i.e., the distance between the center of mass and center of pressure should be conservatively large.

3.1.4 Aerodynamic Force

The net aerodynamic force acting at the spacecraft center of pressure should be determined for all expected flight configurations, orientations, and environmental conditions using methods described in section 2.4.1.

3.1.5 Torque Variations

The variations in aerodynamic torque resulting from shifts in the spacecraft center of mass (caused by mass expulsion, deployment of appendages, equipment jettison, etc.), and shifts in the center of pressure (caused by relative motions of appendages, changes in surface characteristics, shading, etc.) should be evaluated and accounted for to insure proper spacecraft performance.

3.2 Evaluation of Aerodynamic Torque Effects

The evaluation of the effects of aerodynamic torques on spacecraft should include, but not be limited to, the following considerations:

(1) Attitude control system actuator requirements; viz., peak torque, momentum storage, momentum transfer, and control system propellant requirements

(2) Attitude control accuracy

(3) Structural deflections causing shifts in the center of pressure relative to the center of mass.

3.3 Control of Aerodynamic Torque

Procedures should be instituted for the determination and control of surface properties, center of mass, and center of pressure whenever aerodynamic torques are dominant or contribute significantly along with other torques to spacecraft attitude disturbances which are large with respect to the control system capacity. These procedures should be initiated in the early design phase and maintained throughout the development program.

4. RECOMMENDED PRACTICES

It is recommended that aerodynamic torques be assessed in the early design phase of spacecraft development. Experimental or test techniques to ascertain the magnitude of aerodynamic torques on a spacecraft prior to flight do not exist. Therefore, current practices for estimating these torques should be based on knowledge accumulated from previous flight experience and on approximate analytical techniques.

4.1 Aerodynamic Torque Analysis

4.1.1 General Procedure

The objectives of a torque analysis in the preliminary phase of spacecraft design are (1) to achieve a reasonable approximation of the magnitude of the torque, (2) to identify the spacecraft configurations having the greatest potential for causing attitude stabilization problems, and (3) to determine the constraints imposed on the attitude control system for each proposed spacecraft configuration.

The preliminary analysis should establish guidelines for tradeoffs associated with various design configurations to indicate whether more precise analysis is needed. Approximate location of the center of mass at this preliminary stage can only be based on gross mass estimates for the main spacecraft elements and all major appendages. Similarly, the approximate location of the center of pressure can only be based on the probable spacecraft geometry which can be approximated by combinations of tetrahedrons, cylinders, spheres, cones, and plates along with estimates of their surface properties.

When aerodynamic torques are of the same order of magnitude as other significant torques which cause spacecraft attitude disturbance, or when aerodynamic torques are the singular dominant torques, a detailed analysis is necessary. This analysis requires close coordination between the control systems, aerodynamic, structural design, thermal design, and material specification groups. As the design progresses, the participating groups should be aware of all changes in configuration and materials so that the effects of these changes may be evaluated.

Methods of analysis which treat the aerodynamic torque problem with a level of detail that is commensurate with the state of the art are discussed in reference 27. These techniques should be pursued if the preliminary worst-case analysis shows that aerodynamic torque may cause significant disturbance.

4.1.2 Characterization of Atmospheric Environment

Two models are recommended for the Earth's atmosphere: the modified Jacchia model (1967) and the Quick-Look Density model, both presented in detail in reference 1. For the atmospheres of Mars and Venus, the models described in references 2 and 3, respectively, are recommended.

4.1.3 Aerodynamic Force

The most commonly used techniques for determining the aerodynamic force on a spacecraft involve the approximation of the surface configuration by using a number of simple geometrical shapes. Self-shading, as well as shading of one subshape by another, should be evaluated through adequate shading models, such as the "light-ray" and 1/S models presented in section 2.4.3.

The approximate models defined by equations (2-1) and (2-2) are recommended for calculating the aerodynamic force in a worst-case analysis. If the results of this analysis indicate that aerodynamic effects are significant, it is recommended that a detailed calculation be undertaken using the more exact model defined by equation (2-3).

Calculations using the exact model are complex and the assistance of specialists in aerodynamics and heat transfer is recommended. When employing this model, surface temperature distribution

should be evaluated with the methods described in reference 10, taking into account the internal conduction and external radiation characteristics of the body. In this analysis, the recommended practice is to assume that spacecraft surfaces expose mainly oxygen atoms to the atmosphere, unless these surfaces are painted or gold-plated. Experimental results give evidence that, for most materials, the values of the normal momentum exchange coefficient and the thermal accommodation coefficient is between 0.8 and 1.0 (ref. 28). These values, however, may be modified in view of the on-going efforts for better testing techniques.

4.1.4 Aerodynamic Torque Acting on the Spacecraft

The computation of the torque contribution for each surface of the spacecraft, approximated by simple geometric shapes, allows calculation of the total torque acting about the spacecraft center of mass from the equation

$$\mathbf{L}_a = \sum_{i=1}^{n} \mathbf{L}_{a_i} = \sum_{i=1}^{n} [\bar{\ell}_{pi} \times \mathbf{F}_i] = \sum_{i=1}^{n} \left\{ \int \bar{\ell}_i \times d\,\mathbf{F}_i \right\}$$

where

$\mathbf{L}_a$ = aerodynamic torque about the spacecraft center of mass

$\mathbf{L}_{a_i}$ = aerodynamic torque about the spacecraft center of mass due to the ith subsurface

$\bar{\ell}_{pi}$ = vector from the spacecraft center of mass to the center of pressure of the ith subsurface

$\mathbf{F}_i$ = aerodynamic force acting at the center of pressure on the ith surface

(expressions for $\mathbf{F}_i$ are presented in section 2.4.1)

When the approximate model defined by equation (2-1) is used for torque calculations, the moment arm is taken to be at least one-third of the spacecraft's maximum dimension. This is a conservative approximation for the distance between the vehicle's center of mass and the center of pressure. The latter becomes a derived result when the more exact model is employed and is not a requisite input to the analysis.

4.1.5 Variation of Aerodynamic Torque

The dependence of the total aerodynamic torque on various parameters requires that a sensitivity analysis be performed to determine the magnitude of the change in torque as a function of the departure from the nominal values of these parameters. The torque calculations can be repeated assuming worst-case departures from nominal values for such parameters as atmospheric density, center of mass, surface characteristics, etc.

4.2 Minimization of the Effects of Aerodynamic Torques

Proper design of the spacecraft can reduce aerodynamic torques to manageable levels. An applicable technique is to balance the aerodynamic forces about the spacecraft center of mass by designing the exposed surfaces so that the proper area distribution, relative orientation of each surface, and surface characteristics are achieved.

For spacecraft employing extensible structures, the orientation that minimizes the aerodynamic torque should be established. In general, in an optimum configuration the extensible structures, such as solar panels, are coplanar rather than staggered to prevent the possibility of unbalanced torques in an orientation other than the design one. The distinct advantage of choosing coplanar panels for attitude control considerations was recently confirmed during the design of the Small Astronomy Satellite at the Applied Physics Laboratory, Johns Hopkins University.

The stabilizing torques for passively stabilized spacecraft are typically smaller than those encountered on actively stabilized spacecraft and, therefore, passively stabilized spacecraft are more susceptible to disturbances caused by aerodynamic torques.

A recommended practice for reducing the aerodynamic torque for spacecraft is to reduce the eccentricity and increase the perigee altitude, provided that such increase does not affect the mission requirements. Orientation of appendages which would allow their torque contributions to be additive, such as solar panels arranged in a paddlewheel orientation, should be avoided.

4.2.1 Spin-Stabilized Spacecraft

Many spin-stabilized satellites do not have the capability of applying control torques about their spin axis, but use inertia to maintain their spin rate. These satellites are quite sensitive to alterations of their spin rates by aerodynamic torques. If there are surfaces which face the flow over part of the orbit, a reduction in spin rate can occur.

4.2.2 Gravitationally Stabilized Spacecraft

Gravitationally stabilized satellites orbiting at low altitudes (viz., below 1000 km) are sensitive to aerodynamic forces because of the long boom configuration needed to develop the comparatively small magnitude gravitational restoring torque. A torque must be added by the control system in order to maintain attitude. If not, the vehicle will rotate toward the position in which the gravity gradient torque balances the aerodynamic torque. The attitude error that can be tolerated deter-

mines the minimum altitude of a circular orbit (ref. 29). Eccentric orbits and circular orbits, which pass through the diurnal solar bulge in the atmosphere, may have even larger forced response at orbital frequency than the steady offset of a constant aerodynamic torque.

4.2.3 Aerodynamically Stabilized Spacecraft

When a spacecraft is stabilized by aerodynamic forces (angle of attack $\theta = 0$) at a given altitude, the restraining force is a function of the deviation from $\theta = 0$ (ref. 29). At altitudes usually considered suitable for aerodynamic stabilization, between 120 and 600 km, the aerodynamic forces provide negligible damping, so that some means of damping must be provided, such as eddy current, viscous fluid damping, or gyros (ref. 30). Whenever feasible, the spacecraft's moments of inertia should be designed to be nearly constant about all axes to enhance aerodynamic stabilization (ref. 29).

4.2.4 Actively Stabilized Spacecraft

Aerodynamic torques typically present no difficulty for actively stabilized spacecraft that have fuel reserve commensurate with the duration of the mission. To insure that the spacecraft is capable of controlling aerodynamic torque disturbances, a calculation of the largest aerodynamic torque on the spacecraft should be made. This should be done for the combination of spacecraft attitude and orbital altitude that create the greatest disturbance torques. This will insure that the actuators have enough authority to overcome the disturbance. A separate calculation should be made for the net impulse caused by the disturbance.

Features can be incorporated into the design of the spacecraft that will operate in low orbits so that aerodynamic torques will stabilize rather than disturb the attitude. This can be accomplished by adding surfaces to the spacecraft structure so that the optimum distribution of aerodynamic forces about the center of mass can be obtained.

APPENDIX A

RELATIVE MAGNITUDES OF SPACECRAFT ENVIRONMENTAL TORQUES

The relative magnitudes of the spacecraft environmental torques on a typical satellite are shown in figure A-1 (ref. 31). The spacecraft configuration selected for the comparison of these torques is a 1.52-m diameter circular cylinder, 9.14 m in length, having the inertia characteristics shown in the figure. The spacecraft is assumed to be in a circular orbit.

The torque due to cosmic dust was evaluated for the cylinder normal to the stream and a separation distance of 0.36 m between the center of mass and center of pressure. Evaluation of the gravity gradient torque was carried out for an angle of 1° between the cylinder principal axis of inertia (the symmetry axis) and the Earth radius vector. The magnetic torque was computed assuming a 1-A current in a single loop of wire around the length of the cylinder oriented to give the maximum torque. The aerodynamic torque was computed using free-molecular flow theory, and the radiation torque was evaluated using a reflectivity of one.

It should be noted that all of the torques are linear in the parameter shown in the figure, including gravity gradient up to about 15°. Thus, the gravity gradient torque for $\theta = 10°$ can be obtained by multiplying the values on the appropriate curve of figure A-1 by 10; the aerodynamic torque for a separation distance c.g. − c.p. = 1.1 m by multiplying the corresponding curve by 3, etc. (ref. 31).

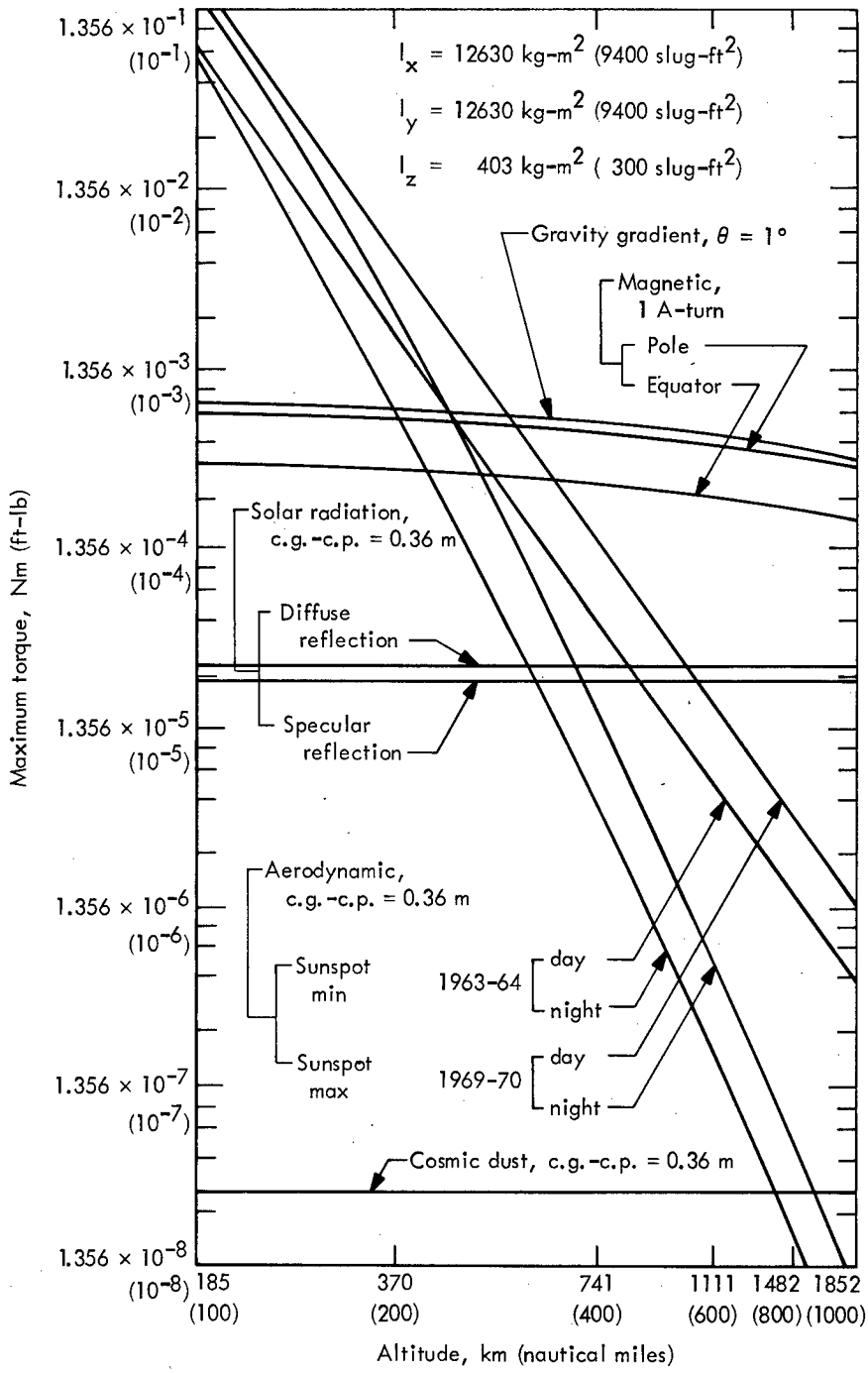

Figure A-1.–Relative magnitudes of the environmental torques on an Earth satellite.

APPENDIX B

DEFINITIONS OF THE ACCOMMODATION AND MOMENTUM EXCHANGE COEFFICIENTS

The thermal accommodation coefficient α is a measure of the degree of equilibrium attained between the molecule and the surface before the molecule is reemitted. It is defined as (ref. 22)

$$\alpha = \frac{E_i - E_r}{E_i - E_w}$$

where

E_i = the energy carried to unit area of the surface by the incident molecules

E_r = the energy carried away from the unit area by the reflected molecules

E_w = the energy the reflected molecules would carry away from the surface if they were reemitted at the temperature of the surface T_w

For complete thermal accommodation $E_r = E_w$ and, therefore, $\alpha = 1$.

The momentum transferred to the surface is specified by momentum exchange coefficients, one for the tangential momentum σ_t and one for the normal momentum σ_n. They are defined as (ref. 22)

$$\sigma_t = \frac{\tau_i - \tau_r}{\tau_i - \tau_w}$$

$$\sigma_n = \frac{P_i - P_r}{P_i - P_w}$$

where

τ_i = the tangential momentum carried to unit area of the surface by the incident molecules

τ_r = the tangential momentum carried away from the unit area by the specularly reflected molecules

τ_w = the tangential momentum which would be carried away from the surface by the diffusely reflected molecules if they were in thermal equilibrium with the surface, for $\alpha = 1$.

P_i = the normal momentum carried to unit area of the surface by the incident molecules

P_r = the normal momentum carried away from the unit area by the reflected molecules

P_w = the normal momentum which would be carried away from the surface by the diffusely reflected molecules if they were in thermal equilibrium with the surface, for $\alpha = 1$.

For completely diffuse reflection, $\tau_r = \tau_w = 0$ and $\sigma_t = 1$, regardless of thermal accommodation. If any specular reflection occurs, σ_t depends on the degree of thermal accommodation through τ_r. For complete specular reflection and no thermal accommodation, $\tau_r = \tau_i$ and $\sigma_t = 0$. For complete diffuse reflection and complete thermal accommodation, $\sigma_n = 1$, while for complete specular reflection and no thermal accommodation, $\sigma_n = 0$.

Specular reflection occurs when the angle of reflection is equal to the angle of incidence. Diffuse reflection of molecules includes all molecules that are reflected in other than a specular direction. Since diffuse reflection is strongly dependent on the reflective surface and its structure, it is not symmetrical about the normal to the surface but may have a definite preferred direction (refs. 32 and 33).

APPENDIX C

NOMENCLATURE

A	Surface area
C_A	Axial force coefficient
C_D	Drag coefficient
C_M	Moment coefficient
C_N	Normal force coefficient
dA	Differential area
$d\mathbf{F}$	Differential force vector
dQ	Differential heat flow
$\mathbf{e}_n$	Outward unit vector normal to dA
$\mathbf{e}_v$	Unit spacecraft velocity vector
F	Aerodynamic force (scalar)
$\mathbf{F}$	Aerodynamic force vector
K	Knudsen number
k, p, t	Direction cosines for aerodynamic force
L	Spacecraft characteristic dimension
ℓ	Moment arm
$\overline{\ell}$	Moment arm vector
m	Molecular mass
R	Gas constant
r	speed ratio, $\frac{v_i}{v_r}$
S	Molecular speed ratio
T_i	Temperature of incident molecules
T_w	Surface temperature
V	Spacecraft velocity
v_i	Velocity of incident molecules
v_r	Velocity of reflected molecules
α	Thermal accommodation coefficient

γ	Isentropic exponent
ϵ, ζ, η	Direction cosines for velocity vector
θ	Angle of attack
λ	Molecular mean free path
ρ	Atmospheric density
σ_n	Normal momentum exchange coefficient
σ_t	Tangential momentum exchange coefficient

REFERENCES

1. Anon.: Models of Earth's Atmosphere (120 to 1000 km). NASA SP-8021, May 1969.
2. Anon.: Models of Mars Atmosphere (1967). NASA SP-8010, May 1968.
3. Anon.: Models of Venus Atmosphere (1968). NASA SP-8011, Dec. 1968.
4. Anon.: Spacecraft Magnetic Torques. NASA SP-8018, March 1969.
5. Anon.: Spacecraft Gravitational Torques. NASA SP-8024, May 1969.
6. Anon.: Spacecraft Radiation Torques. NASA SP-8027, Oct. 1969.
7. Anon.: Spacecraft Mass Expulsion Torques. NASA SP-8034, Dec. 1969.
8. Anon.: Effects of Structural Flexibility on Spacecraft Control Systems. NASA SP-8016, 1969.
9. Schaaf, S. A.; and Chambre, P. L.: Flow of Rarefied Gases. Princeton Univ. Press, 1961.
10. Jackson, J. M.: A Quantum Mechanical Theory of Energy Exchange Between Inert Gas Atoms and a Solid Surface. Proc. Cambridge Phil. Soc., vol. 28, 1932, p. 136.
11. Devonshire, A. F.: Interaction of Atoms and Molecules With Solid Surfaces VIII. Proc. Roy. Soc. London, vol. 158, 1936, p. 269.
12. Zwanzig, R. W.: Collision of a Gas Atom with a Cold Surface. J. Chem. Phys., vol. 32, 1960, p. 1173.
13. Goodman, F. O.: The Dynamics of Simple Cubic Lattices. Phys. Chem. Solids, vol. 23, 1962, p. 1269.
14. Hurlbut, F. C.: Current Developments in the Study of Gas-Surface Interactions. In Rarefied Gas Dynamics. Supplement 4, vol. I. Academic Press, Inc., 1967, p. 2.
15. Schaaf, S. A; and Chambre, P. L.: High-Speed Aerodynamics and Jet Propulsion Series. vol. III, Part H. Princeton Univ. Press, 1958.
16. Reiter, G. S.; and Moe, O. K.: Surface-Particle-Interaction Measurements Using Paddlewheel Satellites. In Rarefied Gas Dynamics. Supplement 5, vol. 2. Academic Press, Inc., 1969, p. 1543.
17. Moe, O. K.: Atmospheric Densities Determined from the Spin Decay of Explorer VI. Univ. of Calif., Los Angeles, 1966.
18. Staff of Goddard Space Flight Center: Orbiting Solar Observatory Satellite OSO I. NASA SP-57, 1965.
19. Warwick, I. W.: Decay of Spin on Sputnik I. Planetary and Space Sciences, vol. I, no. 1, pp. 43–49, 1959.
20. Sentman, L. H.; and Neice, S. E.: Drag Coefficients for Tumbling Satellites. J. Spacecr. Rockets, vol. 4, no. 9, 1967, pp. 1270–1272.
21. Wheeler, P. C.: Magnetic Attitude Control of Rigid Axially Symmetric Spinning Satellites in Circular Earth Orbits. NASA CR-313, Oct. 1965.
22. Sentman, L. H.: Free Molecule Flow Theory and Its Application to the Determination of Aerodynamic Forces. Report LMSC-448514 (DDC document no. AD 265 409), Lockheed Missiles & Space Co., Oct. 1961.
23. Cook, G. E.: Satellite Drag Coefficients. Planet. Space Sci., vol. 13, 1965, pp. 929–946.

24. Sentman, L. H.: Comparison of the Exact and Approximate Methods for Predicting Free Molecule Aerodynamic Coefficients. ARS J., vol. 31, no. 11. Nov. 1961, pp. 1576–1579.

25. Wachman, H. Y.: The Thermal Accumulation Coefficient: A Critical Survey. ARS J., vol. 32, Jan. 1962, pp. 2–12.

26. French, J. B.: Planetary Atmospheric Simulation Using Molecular Beams. AIAA Paper no. 69-1031, AIAA/ASTM/IES 4th Space Simulation Conf., Sept. 1969.

27. Evans, W. J.: Aerodynamic and Radiation Disturbance Torques on Satellites Having Complex Geometry. J. Astronaut. Sci., vol. IX, no. 4, winter 1962, pp. 93–99.

28. Johnson, K. R.: Effect of Dissipative Aerodynamic Torque on Satellite Rotation. J. Spacecr. Rockets, vol. 5, no. 4, Apr. 1968, pp. 408–413.

29. DeBra, D. B.: The Effect of Aerodynamic Forces on Satellite Attitude. J. Astronaut. Sci., vol. 6, 1959, pp. 40–45.

30. Frye, W. E.; and Stearns, E. V. B.: Stabilization and Attitude Control of Satellite Vehicles. ARS J., vol. 29, no. 12, Dec. 1959, pp. 927–931.

31. Wiggins, L. E.: Relative Magnitudes of the Space-Environment Torques on a Satellite. AIAA J., vol. 2, no. 4, April 1964, pp. 770–771.

32. Hinchen, J. J.; and Shepherd, E. F.: Molecular Beam Scattering From Surfaces of Various Metals. Rarefied Gas Dynamics. Supplement 4, vol. 1. Academic Press, Inc., 1967, pp. 239–252.

33. Alcalay, J. A.: and Knute, E. L.: Experimental Study of Scattering in Particle-Surface Collisions With Particle Energies of the Order of 1 eV., Rarefied Gas Dynamics. Supplement 4, vol. 1. Academic Press, Inc., 1967, pp. 253–268.

NASA SPACE VEHICLE DESIGN CRITERIA MONOGRAPHS ISSUED TO DATE

SP-8001 (Structures)	Buffeting During Atmospheric Ascent, revised November 1970
SP-8002 (Structures)	Flight-Loads Measurements During Launch and Exit, December 1964
SP-8003 (Structures)	Flutter, Buzz, and Divergence, July 1964
SP-8004 (Structures)	Panel Flutter, May 1965
SP-8005 (Environment)	Solar Electromagnetic Radiation, June 1965
SP-8006 (Structures)	Local Steady Aerodynamic Loads During Launch and Exit, May 1965
SP-8007 (Structures)	Buckling of Thin-Walled Circular Cylinders, revised August 1968
SP-8008 (Structures)	Prelaunch Ground Wind Loads, November 1965
SP-8009 (Structures)	Propellant Slosh Loads, August 1968
SP-8010 (Environment)	Models of Mars Atmosphere (1967), May 1968
SP-8011 (Environment)	Models of Venus Atmosphere (1968), December 1968
SP-8012 (Structures)	Natural Vibration Modal Analysis, September 1968
SP-8013 (Environment)	Meteoroid Environment Model–1969 (Near Earth to Lunar Surface), March 1969
SP-8014 (Structures)	Entry Thermal Protection, August 1968
SP-8015 (Guidance and Control)	Guidance and Navigation for Entry Vehicles, November 1968
SP-8016 (Guidance and Control)	Effects of Structural Flexibility on Spacecraft Control Systems, April 1969
SP-8017 (Environment)	Magnetic Fields–Earth and Extraterrestrial, March 1969
SP-8018 (Guidance and Control)	Spacecraft Magnetic Torques, March 1969
SP-8019 (Structures)	Buckling of Thin-Walled Truncated Cones, September 1968
SP-8020 (Environment)	Mars Surface Models (1968), May 1969
SP-8021 (Environment)	Models of Earth's Atmosphere (120 to 1000 km), May 1969
SP-8023 (Environment)	Lunar Surface Models, May 1969
SP-8024 (Guidance and Control)	Spacecraft Gravitational Torques, May 1969
SP-8025 (Chemical Propulsion)	Solid Rocket Motor Metal Cases, April 1970

SP-8026 (Guidance and Control)	Spacecraft Star Trackers, July 1970
SP-8027 (Guidance and Control)	Spacecraft Radiation Torques, October 1969
SP-8028 (Guidance and Control)	Entry Vehicle Control, November 1969
SP-8029 (Structures)	Aerodynamic and Rocket-Exhaust Heating During Launch and Ascent, May 1969
SP-8031 (Structures)	Slosh Suppression, May 1969
SP-8032 (Structures)	Buckling of Thin-Walled Doubly Curved Shells, August 1969
SP-8033 (Guidance and Control)	Spacecraft Earth Horizon Sensors, December 1969
SP-8034 (Guidance and Control)	Spacecraft Mass Expulsion Torques, December 1969
SP-8035 (Structures)	Wind Loads During Ascent, June 1970
SP-8036 (Guidance and Control)	Effects of Structural Flexibility on Launch Vehicle Control Systems, February 1970
SP-8037 (Environment)	Assessment and Control of Spacecraft Magnetic Fields, September 1970
SP-8040 (Structures)	Fracture Control of Metallic Pressure Vessels, May 1970
SP-8046 (Structures)	Landing Impact Attenuation for Non-Surface-Planing Landers, April 1970
SP-8047 (Guidance and Control)	Spacecraft Sun Sensors, June 1970

NASA-Langley, 1971 —— 21