NASA
SPACE VEHICLE
DESIGN CRITERIA
(GUIDANCE AND CONTROL)

NASA SP-8059

SPACECRAFT ATTITUDE CONTROL DURING THRUSTING MANEUVERS

PROPERTY OF
MARSHALL LIBRARY
AGTS-MS-IL

FEBRUARY 1971

NATIONAL AERONAUTICS AND SPACE ADMINISTRATION

GUIDE TO THE USE OF THIS MONOGRAPH

The purpose of this monograph is to organize and present, for effective use in spacecraft development, the significant experience and knowledge accumulated in development and operational programs to date. It reviews and assesses current design practices, and from them establishes firm guidance for achieving greater consistency in design, increased reliability in the end product, and greater efficiency in the design effort. The monograph is organized into three major sections that are preceded by a brief *Introduction* and complemented by a set of *References.*

The *State of the Art,* section 2, reviews and discusses the total design problem, and identifies *which* design elements are involved in successful design. It describes succinctly the current technology pertaining to these elements. When detailed information is required, the best available references are cited. This section serves as a survey of the subject that provides background material and prepares a proper technological base for the *Design Criteria* and *Recommended Practices.*

The *Design Criteria,* shown in section 3, state clearly and briefly what rule, guide, limitation, or standard must be imposed on each essential design element to insure successful design. The *Design Criteria* can serve effectively as a checklist for the project manager to use in guiding a design or in assessing its adequacy.

The *Recommended Practices,* as shown in section 4, state how to satisfy each of the criteria. Whenever possible, the best procedure is described; when this cannot be done concisely, appropriate references are provided. The *Recommended Practices,* in conjunction with the *Design Criteria,* provide positive guidance to the practicing designer on how to achieve successful design.

The design criteria monograph is not intended to be a design handbook, a set of specifications, or a design manual. It is a summary and a systematic ordering of the large and loosely organized body of existing successful design techniques and practices. Its value and its merit should be judged on how effectively it makes that material available to and useful to the user.

FOREWORD

NASA experience has indicated a need for uniform criteria for the design of space vehicles. Accordingly, criteria are being developed in the following areas of technology:

Environment
Structures
Guidance and Control
Chemical Propulsion

Individual components of this work will be issued as separate monographs as soon as they are completed. This document, *Spacecraft Attitude Control During Thrusting Maneuvers,* is one such monograph. A list of all monographs in this series issued prior to this one can be found on the last page of this document.

These monographs are to be regarded as guides to design and not as NASA requirements, except as may be specified in formal project specifications. It is expected, however, that the criteria sections of these documents, revised as experience may indicate to be desirable, eventually will be uniformly applied to the design of NASA space vehicles.

This monograph was prepared under the cognizance of the NASA Electronics Research Center and published by the Jet Propulsion Laboratory. Principal contributors were R. B. Noll and J. Zvara of Kaman AviDyne and Dr. J. J. Deyst, Massachusetts Institute of Technology. The effort was guided by an advisory panel chaired by Dr. R. E. Roberson, consultant to Kaman AviDyne. The following individuals participated in advisory panel activities:

R. F. Bohling	NASA Office of Advanced Research and Technology
A. E. Bryson	Stanford University
F. J. Carroll	NASA Electronics Research Center
K. J. Cox	NASA Manned Spacecraft Center
D. B. DeBra	Stanford University
B. M. Dobrotin	Jet Propulsion Laboratory
R. E. Fischell	Applied Physics Laboratory, The Johns Hopkins University
J. A. Gatlin	NASA Goddard Space Flight Center
L. H. Grasshoff	Hughes Aircraft Company, Space Systems Division
J. E. Montgomery	The Boeing Company, Aerospace Systems Division
R. E. Portnoy	Grumman Aircraft Engineering Corporation
J. Rodden	Lockheed Missiles and Space Company, Space Systems Division
C. H. Spenny	NASA Electronics Research Center
G. E. Tutt	North American Rockwell, Space Division
W. S. Widnall	Intermetrics

Contributions in the form of design and development practices were also provided by many other engineers of NASA and the aerospace community.

Comments concerning the technical content of these monographs will be welcomed by the National Aeronautics and Space Administration, Office of Advanced Research and Technology (Code RE), Washington, D.C. 20546.

February 1971

CONTENTS

1. INTRODUCTION 1

2. STATE OF THE ART 2

2.1 Spin Stabilization 6
2.2 Passive Control 11
2.3 Active Closed-Loop Control 12

3. DESIGN CRITERIA 25

3.1 Performance 25
3.2 Design Considerations 25
3.3 Design Verification 27

4. RECOMMENDED PRACTICES 28

4.1 Analytical Studies 28
4.2 Simulation Studies 30
4.3 Tests 31
4.4 Specific Recommended Practices 32

REFERENCES 41

NASA SPACE VEHICLE DESIGN CRITERIA MONOGRAPHS ISSUED TO DATE 45

SPACECRAFT ATTITUDE CONTROL DURING THRUSTING MANEUVERS

1. INTRODUCTION

Spacecraft attitude must be controlled during translational thrusting maneuvers in terms of accuracy specifications determined by the mission. Desired velocity changes can be realized by long burns at low thrust levels or relatively short burns at high thrust levels. Low thrust levels generally result in relatively minor additions to the disturbance torques affecting vehicle orientation. However, the propulsive force more often is high, and the line of action of the force is generally offset from the center of mass by an amount that is uncertain and changing. The result can be a large disturbance torque whose presence is important to and often dominates the design of the attitude-control system. Thus, in general, thrusting maneuvers at low force levels place requirements primarily on the total impulse of the attitude-control system, while maneuvers at high thrust levels also place requirements on the peak torque of the attitude-control system.

The dynamic characteristics of the attitude-control system can have a significant influence on the accuracy and efficiency with which thrusting maneuvers can be performed. A properly designed system will be capable of controlling the thrust vector such that the prescribed attitude and rate limits are not exceeded in the presence of propulsive force variations, engine and actuator dynamics, mass variations, and partial system failures, and do not violate performance, propellant, structural, or crew limitations. Improper design or operation can result in undesirable vehicle attitude oscillations, poor handling qualities, excessive loads on structures, excessive propellant expenditure, and inaccurate orbits and trajectories. In extreme cases, these conditions can lead to the loss of the spacecraft and its crew.

Attitude-control problems associated with thrusting maneuvers are reviewed, and design criteria and recommended practices for avoiding such problems are presented in this monograph. Because of their specialized nature, preburn and postburn orientation maneuvers, docking maneuvers, and landing maneuvers are not included. Other monographs covering related topics are: NASA SP-8009—Propellant Slosh Loads (ref. 1), NASA SP-8016—Effects of Structural Flexibility on Spacecraft Control Systems (ref. 2), NASA SP-8018—Spacecraft Magnetic Torques (ref. 3), NASA SP-8024—Spacecraft Gravitational Torques (ref. 4), NASA SP-8027—Spacecraft Radiation Torques (ref. 5), and NASA SP-8028—Entry Vehicle Control (ref. 6).

2. STATE OF THE ART

A review of some of the requirements for thrusting maneuvers and the nature of typical systems used to satisfy them illustrates the origin of certain attitude-control system design considerations. It also shows that a well-coordinated program of analysis, simulation and test, based on current technology, usually has been adequate for proper design of the attitude-control system. Potential problems usually have been recognized and overcome during the design phase, so that relatively few difficulties have arisen in flight.

Spacecraft missions involving thrusting maneuvers are classified in table 1 according to the maneuver performed and by the type of control system utilized. The maneuvers are typical of those required to meet various mission objectives, but the list is not exhaustive. Furthermore, it should not be inferred from the table that different control systems necessarily are required for different thrusting maneuvers.

The three control system types are defined as follows:

(1) *Spin Stabilization.* A spacecraft is said to be spin stabilized if its angular momentum is much greater in magnitude than the effect of disturbance torque impulses during the time of interest. A spinning body is defined as one in which the angular velocity component on one body axis (spin axis) remains much greater in magnitude than the angular velocity component on any axis orthogonal to it. Spin-stabilized spacecraft include both those in which the entire spacecraft is spinning and those in which a

TABLE 1.–Spacecraft Attitude-Control Systems During Thrusting Maneuvers

Attitude-control system during maneuver	Thrusting maneuver[a]					
	Orbital changes	Transfer trajectory insertion	Midcourse corrections	Deorbit	Rendezvous	Station keeping
Spin	Syncom ATS 2-5 Comsats	Scout upper stage		Biosatellite Agena nose-cone package		Syncom Comsats ATS 2&3 LES-6
Passive						ATS 5
Active	Gemini Gemini/Agena Lunar Orbiter Apollo CSM Apollo LM Apollo CSM/LM	Agena Burner II Saturn IV-B Apollo CSM Apollo CSM/LM Lunar Orbiter	Surveyor Ranger Mariner Lunar Orbiter Apollo CSM/LM	Mercury Gemini Surveyor Lunar Orbiter Apollo LM Apollo CSM	Gemini Apollo CSM Apollo LM	Apollo CSM Apollo LM

[a]Other maneuvers commonly performed include apogee boost, ullage (propellant settling), lunar orbit insertion, lunar liftoff, and docked maneuvers.

subbody is spinning. In the latter case, the spacecraft is said to be dual-spin stabilized. The rotational dynamic behavior of such bodies is so conditioned by the spin that all are conveniently treated analytically as a single class, whether or not the inherent "gyroscopic stability" is supplemented by an active closed-loop control system.

(2) *Passive Control.* Passive attitude control is achieved when the interaction of the spacecraft with ambient fields produces a "natural" stabilizing torque. The torque sources include the gravitational field, the atmosphere, the magnetic field, and the incident radiation environment. This class is defined to include cases where the vehicle dynamics or energy dissipation devices involve power consumption, but in a purely open-loop fashion (often characterized as "semipassive").

(3) *Active Closed-Loop Control.* Active attitude control is achieved by a closed-loop control system which includes sensors, compensation networks, control logic, actuating devices to apply torque, and an onboard energy source. Except for vehicles that are spin stabilized in the sense of the first category, all closed-loop control systems are included, whether or not some control torque also is realized passively.

Almost every spacecraft will have an attitude-control system for coasting flight, and there are obvious advantages if a single system can serve for the thrusting maneuvers as well. Major factors in this decision are the total attitude-control impulse requirement and peak attitude-control torque requirement during thrusting. These, in turn, depend both on the accuracy of the velocity change required by the mission and the characteristics of the disturbance torques produced by the translational maneuver. Tables 2 and 3 provide illustrative information on thrust devices for several spacecraft. The total impulse and thrust range for thrustors used for various translational maneuvers are given in table 2, while similar information is given in table 3 for thrustors which provide both translation capability and attitude control. If the control system selected for coasting flight is unsatisfactory during thrusting maneuvers, then either it must be modified or suitably supplemented.

The remainder of this section describes the problems related to the three types of attitude-control systems discussed above. Specific applications, that is, those given in tables 2 and 3, are used as examples to aid in the description and present the "state of the art" for these systems.

TABLE 2.–Spacecraft Thrustors for Translation

Spacecraft	Maneuver	Attitude-control system	Thrustors	No. of thrustors	Mount	Thrust control	Total impulse N-sec (lb-sec)	Thrust (per thrustor) N (lb)
Syncom	Apogee boost	Spin	Solid rocket	1	Fixed	Constant	73 900 (16 600)	4 980 (1 120)
ATS 2-5	Apogee boost	Spin	Solid rocket	1	Fixed	Constant		24 750 (6 250)
ATS 4&5	Orbital changes	Spin	Liquid rocket	4	Fixed	Constant		26 (5)
Gemini	Deorbit	Active	Solid rocket	4	Fixed	Constant	253 000 (56 800)	11 100 (2 500)
Mercury	Deorbit	Active	Solid rocket	3	Fixed	Constant	173 000 (38 880)	4 750 (1 070)
Agena	Ullage; orbital changes	Active	Gas jet	2	Fixed	Constant		
Apollo-LM ascent	Lunar liftoff; orbital changes; rendezvous	Active	Liquid rocket	1	Fixed	Constant	7×10^6 (1.6×10^6)	15 500 (3 500)

TABLE 3.–Spacecraft Thrustors for Both Attitude Control and Translation

Spacecraft	Maneuver	Attitude-control system	Thrustors	No. of thrustors	Mount	Thrust control	Total impulse N-sec (lb-sec)	Thrust (per thrustor) N (lb)
Syncom	Station keeping	Spin	Gas jets	4	Fixed	Pulsed	13 400 (3 016)	5.3-13.8 (1.2-3.1)
ATS 2&3	Orbital changes; station keeping	Spin	Liquid rocket	4	Fixed	Constant		26 (5)
ATS 4&5	Station keeping; orientation	Gravity-gradient	Ion engines; Resistojets; Subliming solids	1 2 2	Fixed Fixed Fixed	2 Level 2 Level Constant	}	45×10^{-6} (10×10^{-6})
LES-6	Station keeping	Spin	Plasma jet	4	Fixed	Pulsed		10×10^{-6} (2×10^{-6})

TABLE 3.–(continued)

Spacecraft	Maneuver	Attitude-control system	Thrustors	No. of thrustors	Mount	Thrust control	Total impulse N-sec (lb-sec)	Thrust (per thrustor) N (lb)
Gemini	Orbital changes; rendezvous	Active	Gas jets	8 2 6	Fixed	On-off	801 000 (180 000)	102 (23) 351 (79) 422 (95)
Surveyor	Midcourse correction	Active	Liquid rocket	3	2 Fixed 1 gimbaled	Throttlable (vernier)		133-461 (30-104)
Ranger	Midcourse correction	Active	Liquid rocket	1	Fixed	Constant; jet vanes		222 (50)
Mariner (1-7)	Midcourse correction	Active	Liquid rocket	1	Fixed	Constant; jet vanes	10 000 (2 200)	222 (50)
Agena	Trajectory insertion; docked maneuvers	Active	Liquid rocket	1	Gimbal	Constant; fast gimbal 18-deg/sec	15×10^6 (3.3×10^6)	71 000 (16 000)
Burner 2	Orbit insertion; orbital changes; orbit trim	Active	Solid; Liquid; Gas jets	1 4 (pitch and yaw) 4 (pitch and yaw) 4 (roll)	Fixed Fixed Fixed	Fixed impulse increment Vernier	1 861 000 (418 104) 11 620 (2 610) 1 130 (254)	41 900 (9 400) 98 (22) 9.8 (2.2)
Lunar Orbiter	Midcourse lunar orbit insertion; orbital changes; trim; deorbit	Active	Liquid rocket	1	Gimbal	Constant; fast gimbal 10-deg/sec	334 000 (75 000)	445 (100)
Apollo CSM	Ullage; rendezvous	Active	Liquid rockets	16	Fixed	On-off		445 (100)
Apollo CSM	Midcourse; lunar orbit insertion; transearth injection	Active	Liquid rocket	1	Gimbal	Constant; fast gimbal 6 deg/sec		91 000 (20 500)
Apollo SIVB	Lunar impact	Active	Liquid	6 A/C; 2 ullage settling	Fixed	On-off	756 000 (170 000)	A/C: 670 (150) Ullage settling: 310 (70)

TABLE 3.–(continued)

Spacecraft	Maneuver	Attitude-control system	Thrustors	No. of thrustors	Mount	Thrust control	Total impulse N-sec (lb-sec)	Thrust (per thrustor) N (lb)
Apollo-LM descent and ascent	Rendezvous; ullage	Active	Liquid rockets	16	Fixed	On-off		445 (100)
Apollo-LM descent	Orbital changes; deorbit	Active	Liquid rocket	1	Gimbal	Throttl-able; slow gimbal 0.2-deg/sec		4 600-46 600 (1 050-10 500)

2.1 Spin Stabilization

Spin stabilization has a number of significant advantages for thrusting maneuvers, such as: (1) a gyro reference package may not be needed, saving both weight and power, and (2) where the thrust is along the spin axis for a period of several spin cycles—typically 10 to 200—there is an averaging of the effect of thrust misalinement.

There are two major types of spin-stabilized spacecraft. One is a single rigid or quasi-rigid body spinning with respect to inertial space. The other is a multibody system in which various bodies have various states of rotation, but at least one is spinning. The latter type is sometimes called a "dual spin" satellite; if it is a two-body system with at least one body rigid and symmetric about the axis of relative rotation, it is called a gyrostat. In both cases there is a dominant component of angular momentum in body axes which is large with respect to the disturbance torque impulse.

2.1.1 Single Spinning Body

Ideally, the spin axis of a spinning body is alined with its angular momentum vector (i.e., zero nutation angle). For an ideally rigid body, spin about either the axis of minimum inertia (I_{min}) or maximum inertia (I_{max}) is stable (the nutation angle does not increase). For a spacecraft, where the structure is flexible and other forms of energy dissipation are present, only spin about I_{max} is stable. Spacecraft have been spun about I_{min} for short periods of time or with an active nutation damper. The angular momentum vector is parallel or perpendicular to the direction of the desired velocity increment, while the line of thrust usually passes through the center of mass and is alined either parallel or perpendicular to the spin axis. Under nominal conditions, no misalinements exist between the spin axis, thrust vector, and angular momentum vector. Under actual conditions, however, a nutation may exist, and the angular momentum vector may be misaligned

from the spin axis. A center-of-mass offset and thrust-vector misalinement may occur, leading to still greater nutation. During the thrusting maneuver, an undesired velocity is added normal to the nominal velocity change, and the velocity component in the desired direction does not achieve the required value. All of these circumstances are illustrated by flight experience.

The spin rate of spin-stabilized spacecraft is affected by the exchange of momentum during thrusting maneuvers, an effect known as jet damping. When propellant stored at a large radius leaves through a central nozzle, the spin rate increases to conserve momentum. Conversely, when propellant stored near the spacecraft center leaves through a set of nozzles located along the outer radius, spin rate decreases. Since the spin rate is usually sufficiently high, jet damping does not usually cause difficulty.

2.1.1.1 Apogee Boost

The Syncom and Applications Technology Satellite (ATS), illustrated in figure 1, are typical of the single-body class of spin-stabilized spacecraft. The Intelsat series (excluding 4) and the commercial communications satellites (comsats), such as Early Bird, are also included in this class. These satellites were initially spin stabilized in an elliptical, nonsynchronous orbit with apogee at synchronous altitude. The apogee engine (fig. 1) is mounted with the thrust axis nominally alined with the spin axis. The satellite spin axis is oriented properly by the jet attitude-control system prior to firing of the apogee engine (refs. 7 and 8). Firing of the engine on command from the ground then places the satellite into the synchronous orbit (refs. 9 and 10).

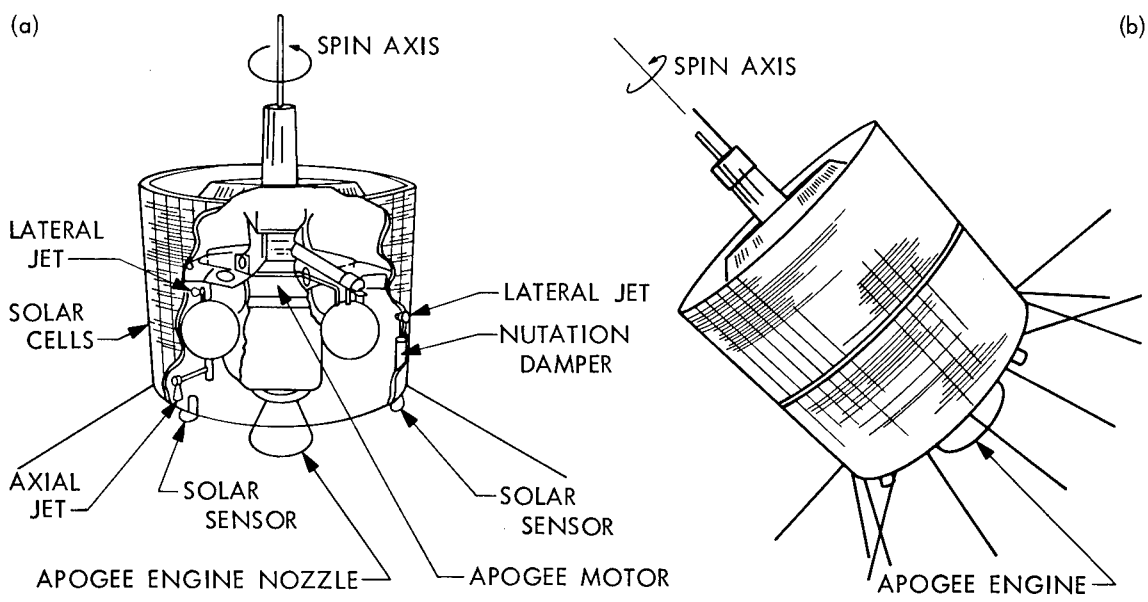

Figure 1.–Single-body spin-stabilized spacecraft: (a) Syncom spacecraft; (b) ATS spacecraft.

Attitude perturbation caused by thrust transients, and nutation angle after boost are minimized by spinning at a sufficiently high rate. The spin rate chosen for other mission considerations may be sufficiently high for thrusting maneuver purposes. Apogee boost accuracies within 0.5 deg of desired angular momentum orientation and 1% of desired velocity increment [usually about 18 m/sec (60 ft/sec)] are typical.

The choice of spin axis can affect the attitude stability of the spacecraft. For example, the ATS 4 and 5 satellites were spin stabilized about their axis of minimum moment of inertia (that is, spin-to-transverse inertia ratio was less than one) during apogee boost. Since this spin configuration is unstable (characteristic time constant is typically from several minutes to several hours) in the presence of structural damping and other energy dissipation mechanisms, a divergent nutation angle could develop. The resulting attitude errors would be undesirable since they affect the thrust-vector orientation during apogee boost and the clearances between the spacecraft and engine during engine jettison. Therefore, an active nutation-angle control system was incorporated in the spacecraft. This system utilized a linear accelerometer to sense nutation angle and an electronic circuit to control the thrustor operation. The properly phased transverse axis torque was provided by the axial attitude-control jet. The nutation-angle control system was designed to maintain nutation angle to less than 1.5 deg during the coast phase (refs. 11 and 12). The apogee boost maneuver was performed successfully for the ATS 5 satellite.

2.1.1.2 Station Keeping

Spin stabilization has also been used during thrusting maneuvers after synchronous orbit has been achieved. Radial and axial control jets (shown for Syncom in fig. 1a) are used to maneuver the spacecraft to a desired synchronous station and to correct drift from this station ("station keeping") (refs. 8 and 10). An axial jet, pulsed in synchronization with the spin rate over a given sector of the spin cycle, is used to apply a precession torque effecting an orientation change of the spin axis (fig. 2a). A tube partially filled with fluid acts as a nutation damper. An axial jet in continuous mode can be used for velocity increments parallel to the spin axis, and a radial jet in a pulsed mode can be used for velocity corrections normal to the spin axis (fig. 2b). The axial jet, operated continuously, can be used to change the orbit inclination if the spin axis is alined normal to the orbit plane. Alinement of the radial jets relative to the spacecraft center of mass and the axial jets relative to the spin axis is not too critical for thrust levels of the order of 4.5 to 22 N (1–5 lb) because of the gyroscopic stiffness afforded by the spinning spacecraft.

The direction of the angular momentum vector at the beginning of a thrusting maneuver may be in error from the action of torques, such as those produced by solar radiation (ref. 5). Thus, even if thrust alinement is perfect and the nutation angle is zero, the velocity increment can have undesired components. In the case of synchronous satellites, like Syncom and Early Bird, orbit plane changes were made by an axial jet. The magnitude and direction of the in-plane velocity increment due to spin axis misalinement were calculated from knowledge of the spin axis attitude and the expected axial velocity increment, and were cancelled by firing the radial jet. This process can be accomplished quite accurately as evidenced by the synchronous satellites which, typically, have been held to within a few hundredths of one degree of the desired longitudinal position.

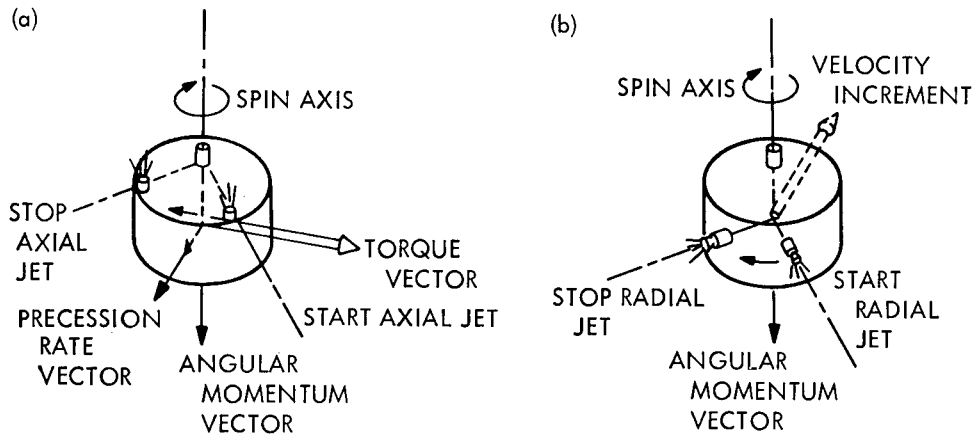

Figure 2.–Pulsed-jet control for spin-stabilized spacecraft: (a) orientation control; (b) velocity control.

2.1.2 Multibody Systems

An idealized dual-spin configuration is depicted in figure 3. This configuration is particularly useful for spacecraft which have a requirement for unidirectional pointing of a subsystem. To accomplish the pointing, one subbody is oriented in the desired position, while the other subbody spins relative to it to provide the advantages of spin stabilization. Dual-spin configurations are

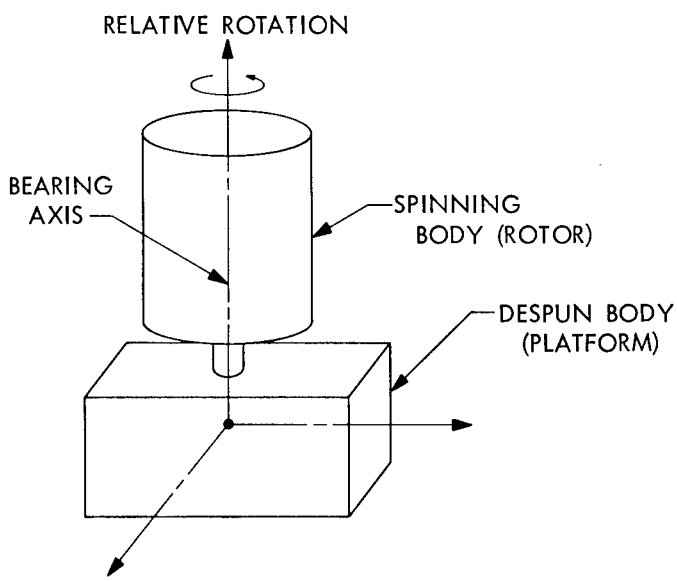

Figure 3.–Idealized dual-spin satellite.

susceptible to spin axis instability just as single bodies are, but sometimes there is greater latitude in the choice of the spin-to-transverse moment of inertia ratios. Stability criteria for such spacecraft are discussed in references 13 to 15.

Among the advantages of the dual-spin stabilized spacecraft are the velocity control capability and performance available by placing appropriate thrustors on the *spinning portion.* The effects of operating thrustors mounted on the rotor are much the same as in single body spin-stabilized spacecraft. However, the presence of the despun platform can result in the combined center of mass being significantly offset from the bearing axis (fig. 4). Under these conditions, the operation of a radial jet (spin-synchronous thrust pulses transverse to the bearing axis) produces a torque about the vehicle-mass center, resulting in a change in the system angular momentum. If the platform despin attitude is constrained because of operational requirements, then the change in angular momentum is manifested as a change in rotor spin rate which simply must be accepted. However, if the platform attitude can be temporarily offset around the spin axis during the maneuver, then the magnitude and direction of the spin rate change can be controlled by rotating the platform prior to thrustor firing to a fixed position of the mass center relative to the line of thrust. For example, if the platform center of mass can be placed in the plane of the average transverse thrust direction, nominally no change in relative spin occurs. The Air Force TACSAT is the first spacecraft of the dual-spin type having the capability of translational maneuvers. In that spacecraft, the offset of the platform center of mass has been used to advantage in making adjustments to the spin rate by offsetting the platform attitude during transverse thrusting.

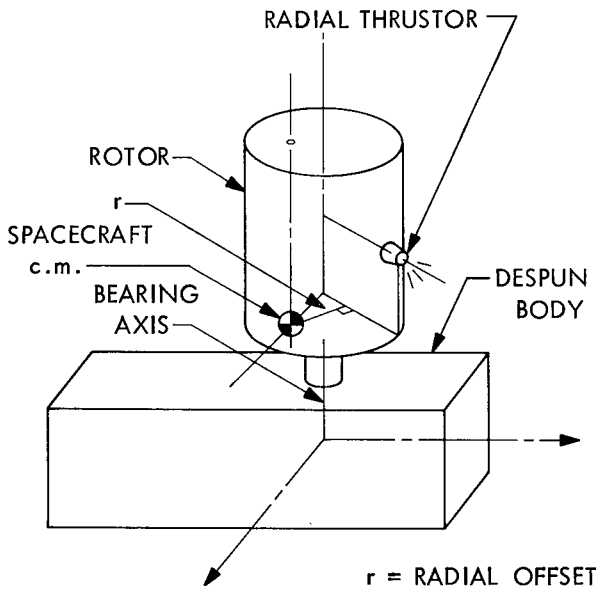

Figure 4.–Thrusting maneuvers for dual-spin spacecraft; radial thrust.

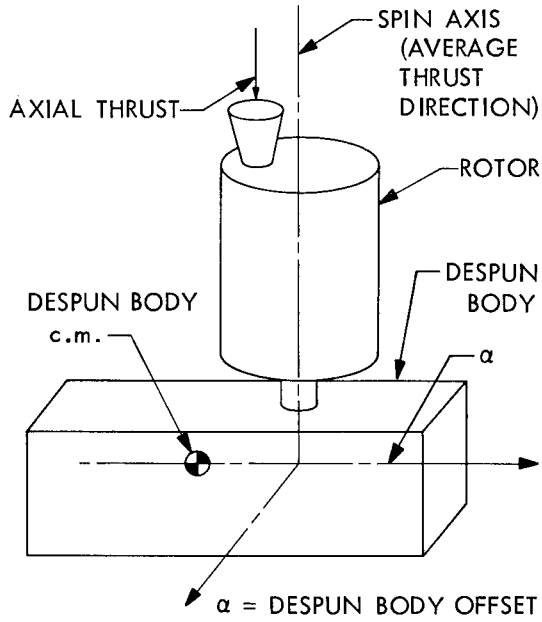

Figure 5.–Thrusting maneuvers for dual-spin spacecraft; axial thrust.

2.1.2.1 Apogee Boost

An important consideration is the effect of a despun platform center-of-mass offset during axial thrusting. Even a small combined offset of a few hundredths of a centimeter can result in an unacceptable change in average thrust direction during the large, sustained thrust of an apogee boost engine (fig. 5). The first dual-spin spacecraft to employ an apogee boost engine is Intelsat 4. In that spacecraft, the platform center of mass is nominally on the spin (thrust) axis, but the tolerance in the center-of-mass location precludes complete despin of the platform during apogee boost. A special mode of operation is required wherein the platform is maintained at a constant, suitably large inertial rate during boost so the spacecraft transverse torque direction rotates in inertial space, preventing a unidirectional precession of the angular momentum vector. In other words, during a typical apogee boost, a dual-spin spacecraft simply cannot tolerate a completely despun platform (with any significant mass) without experiencing unacceptable misorientation of the boost velocity increment. Analysis has shown that the platform inertial spin must not be allowed to approach the nutational natural frequency during apogee boost. Such a condition can result in a severe buildup of nutation in a very brief period with possibly catastrophic results.

2.1.2.2 Station Keeping

The use of rotor-mounted axial attitude-control thrustors for north-south station keeping imposes a relatively insignificant problem for dual-spin spacecraft because of the small velocity increment requirements. Continuous thrusting of an axial jet causes some angular momentum vector precession in the presence of a platform center of mass offset, but this effect may be corrected by a few attitude adjustment pulses. If reorientation of the despun platform is acceptable, the maneuver may be performed in two equal increments during which the platform attitude differs by 180 deg. The net attitude change during the entire maneuver would then nominally be zero. A third solution is to impart a spin rate to the platform during north-south thrusting so the transverse torque vector rotates in inertial space as in the case of apogee boost. The solution chosen depends upon the velocity to be added, the magnitude of the center-of-mass offset, the allowable attitude change, and other operational considerations such as the mechanization of the spin joints and motor.

2.2 Passive Control

Although thrusting maneuvers for passively controlled systems have not been performed to date, they have been considered for station keeping; for example, ATS 5 (see section 2.1.1) was to use extremely low thrust levels for station keeping while gravitationally stabilized in a synchronous orbit. The low level of restoring torque available in a passively controlled spacecraft (e.g., refs. 3 and 4) makes it difficult to control attitude disturbances resulting principally from thrust misalinement.

The flexibility of the extendible boom used for gravitational stabilization (see, e.g., ref. 16) presents particular difficulty during thrusting maneuvers. Boom deflections produced by external

disturbances (e.g., refs. 2 and 17) result in relatively unpredictable center-of-mass variations; these affect the thrust misalinement torques which, in turn, can induce further boom deflections (e.g., ref. 18). In addition, the vibration modes of the boom can be excited by the thrustor duty cycle resulting in attitude disturbances.

The attitude of a satellite using a proof mass system, such as is being considered for a gravitationally-stabilized advanced Transit satellite, is susceptible to thrusting disturbances and to potential stability problems due to interaction between the attitude and translational control systems. Basically, the system uses an unsupported proof mass which is shielded from external nongravitational forces. The mass, therefore, flies undisturbed in orbit. Relative motion between the mass and the satellite is detected by the control system; when the motion exceeds 1 mm, thrustors are fired to reestablish the proper mass-satellite relationship. However, unless the proof-mass sensor null is not at the satellite mass center, its output signal contains responses from rotational as well as translation maneuvers (ref. 19).

2.3 Active Closed-Loop Control

Active attitude control provides flexibility in the spacecraft mission, allowing the vehicle to be quickly rotated to any desired orientation. The general form of an active closed-loop attitude-control system is illustrated in figure 6. The controller processes guidance commands and attitude sensor feedback signals, and generates effector commands. The controller, which may be analog, digital, or hybrid, provides signal conditioning or filtering. The effectors include the propulsive devices (thrustors) which produce torques required to maintain spacecraft attitude, actuation devices used to direct the thrust vector, and any nonpropulsive producers of pure couples. The torques produced by the effectors are used to effect changes in spacecraft attitude as well as to control rigid-body orientation changes caused by translational thrust forces not passing through

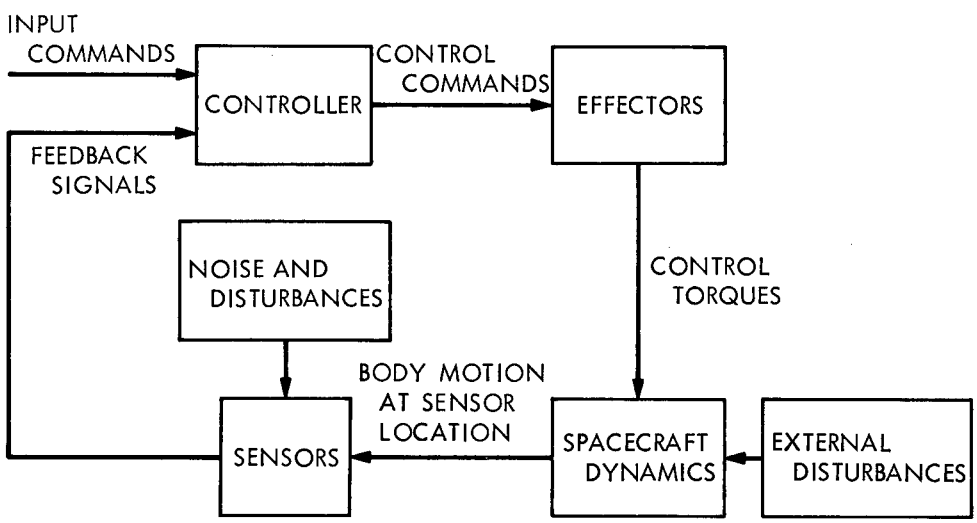

Figure 6.–Block diagram of active attitude-control loop.

the center of mass, and by external disturbance torques. However, the control torques also excite flexible body modes and propellant-slosh modes. The body motion at each sensor location is detected and fed back to the controller. Sensor outputs can also be affected by local flexibility of the sensor mounting structure and by external disturbances such as thrustor noise and solar radiation heating.

Attitude control during thrusting maneuvers has been achieved by using thrustors of two basic types: (1) those whose thrust directions are fixed relative to the spacecraft; and (2) those whose thrust directions are movable (gimbaled engines or deflected thrust systems). The choice of thrustor type involves numerous tradeoffs. Generally, fixed thrust is selected when relatively low control torques are required, thus avoiding the complexity of a movable thrust system. The movable thrust system is more efficient when the torques, to overcome thrust misalinement, are so large that the required weight of a fixed thrust system is excessive. A typical summary of the major tradeoff factors considered in choosing the thrustor type for Lunar Orbiter is given in table 4. The gimbaled system was chosen mainly to conserve weight and to relax center-of-mass (c.m.) requirements (ref. 20).

TABLE 4.–Lunar Orbiter Gimbaled Engine Tradeoffs (ref. 20)

Advantages of gimbaled engine	Disadvantages of gimbaled engine
1. Provides savings of 9 kg (20 lb).	1. Requires actuator development in short time.
2. Eliminates skewed high thrust control axes due to thrustor location on solar panel.	2. Needs structural redesign to provide gimbal compatible with: a. Space environment. b. Engine heat soakback.
3. Eliminates reaction control coupling with solar panel flexibility.	3. Introduces actuator development and qualifications cost as a major addition.
4. Eliminates flexible plumbing to panel mounted thrustor.	4. Introduces thrust vector control (TVC) coupling with solar panel flexibility.
5. Eliminates high level thrustor valve location problem: a. Performance best with thrustors on the tip of solar panels. b. Solar panel temperatures extreme.	
6. Simplifies reaction control system mechanization and allows modular design.	
7. Makes mission performance less sensitive to c.m. changes; relaxes c.m. control requirement.	
8. Better growth capability.	

2.3.1 Fixed Thrust

Fixed thrust is used for thrusting maneuvers such as ullage burns (propellant settling), drag makeup, rendezvous, orbit change, midcourse correction, and deorbit. Attitude-control forces are produced by thrustors usually located on the periphery of the spacecraft. These thrustors may also be used for translational control or they may supplement a translational thrustor system.

The location of the mass center is extremely important for fixed high thrust engines since the magnitude of allowable thrust misalinement is limited by the available control torque. The Apollo lunar module (LM) ascent stage utilized a fixed, high thrust engine for translation and a series of small liquid rockets for attitude control (fig. 7). The LM ascent engine was initially alined along the vertical body axis. However, as the design progressed, shift of the vehicle center of mass required relocation and canting of the engine to reduce the thrust misalinement.

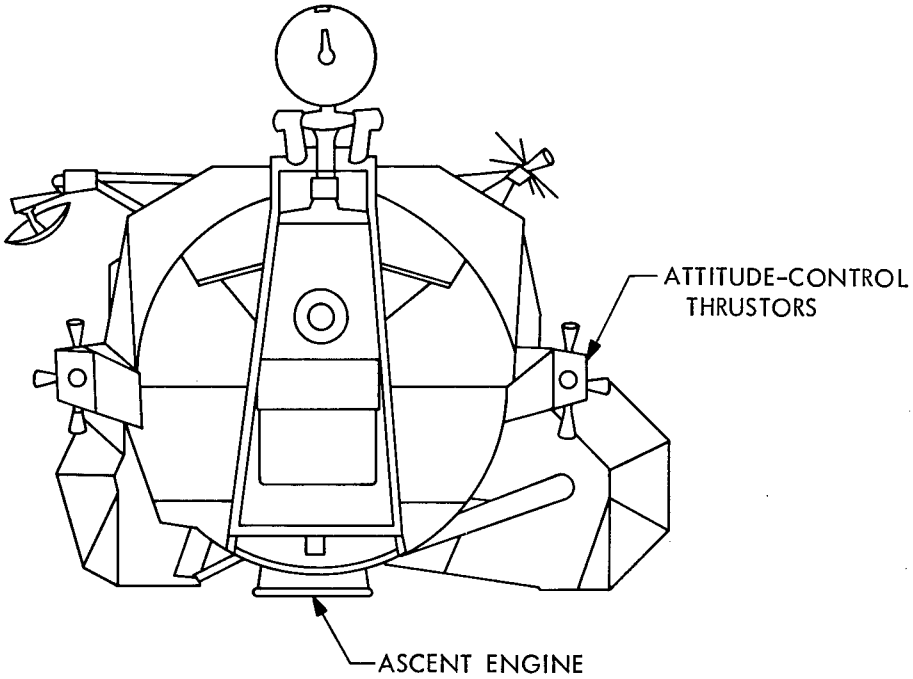

Figure 7.—Apollo lunar module ascent stage.

Thrust misalinement has been an important consideration in spacecraft designed to achieve translation using attitude-control thrustors. The Apollo command and service module (CSM), shown in figure 8, is a typical example. The fixed +X(roll) attitude-control thrustors also were used for maneuvers such as station keeping and propellant settling; however, because of thrustor misalinement, torques were also produced about the pitch and yaw axes. Therefore, the automatic control system was designed to select, as required, alternate combinations of jets which would continue to maintain not only translational thrust but also provide a restoring torque. Thus, attitude errors were kept within specified deadbands (ref. 21).

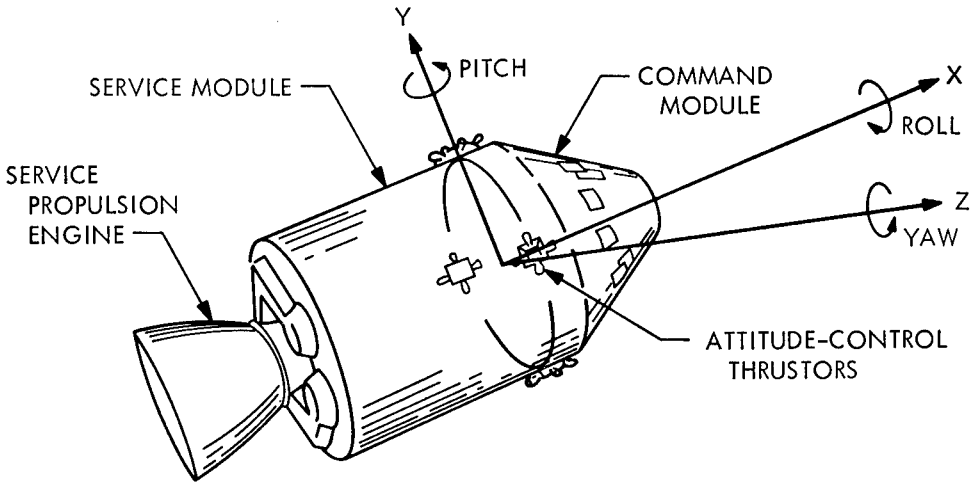

Figure 8.–Apollo CSM.

Failure of attitude-control thrustors can seriously compromise mission success, as occurred with Gemini 8 and Surveyor 2. During docked operations of Gemini 8, a wiring short circuit caused continuous firing of an attitude-control thrustor. Although the failure was remedied by activating the entry control system and disabling the orbital attitude and maneuver system (OAMS, fig. 9), the mission had to be terminated prematurely (ref. 22).

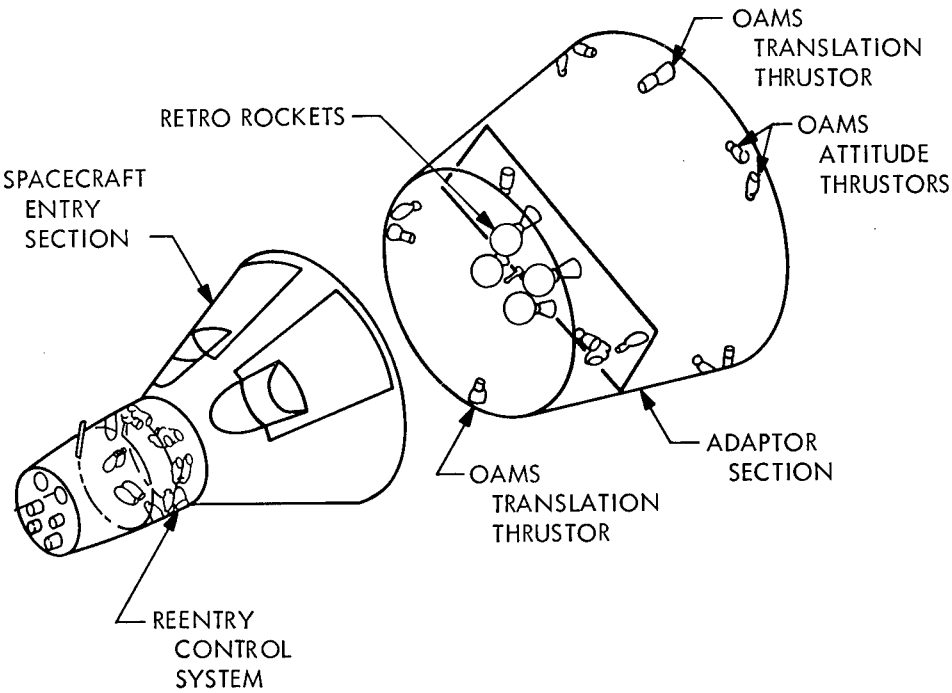

Figure 9.–Gemini spacecraft thrustors including OAMS and retrorockets.

The Surveyor 2 spacecraft (fig. 10) began to tumble during its midcourse maneuver when one of the three vernier engines, which provided both attitude and translational control, failed to ignite. Gas jets used for attitude control during coasting flight could not supply sufficient torque to stop the tumbling (ref. 23).

The Apollo CSM and LM spacecraft were designed to be operational in the event of attitude-control jet failures. As discussed above, a jet select logic was implemented to provide appropriate forces for attitude, translation, or combined control. The firing logic was designed to be modified if jets were known to be disabled. The jet select logic is discussed in reference 21 for the Apollo CSM and in references 24 and 25 for the Apollo LM.

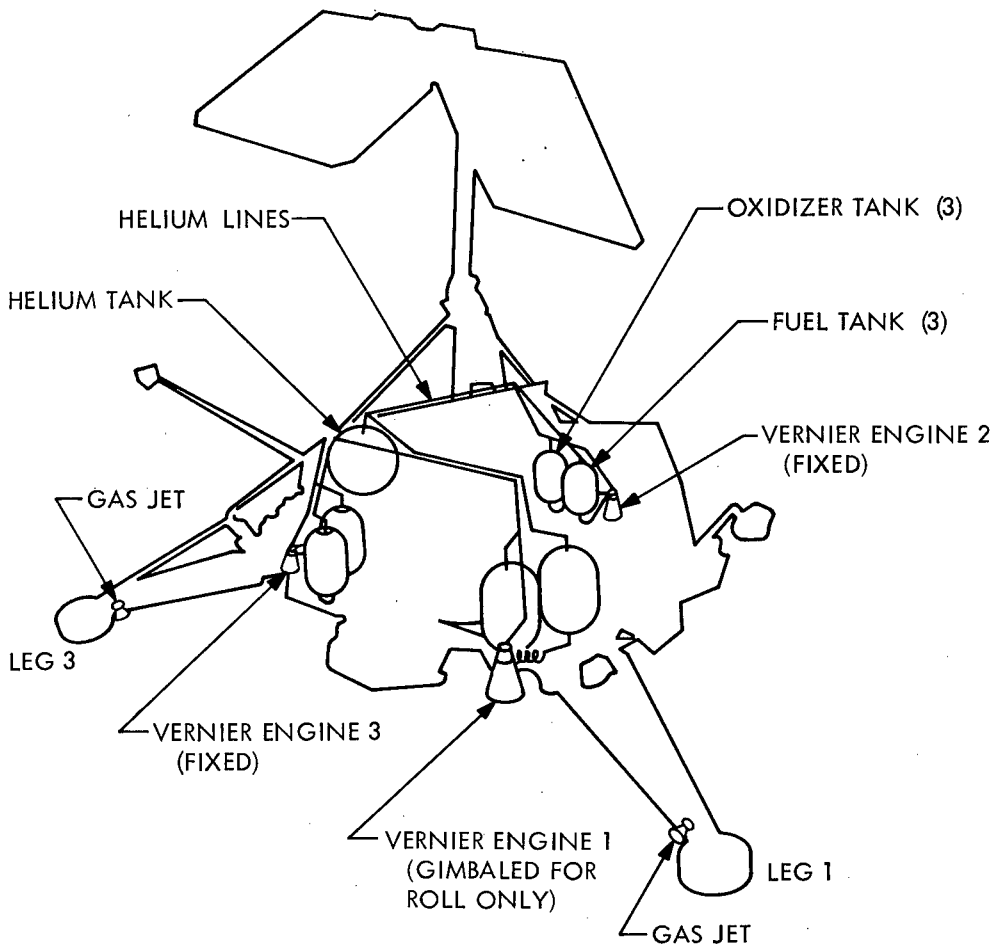

Figure 10.–Surveyor midcourse maneuver propulsion system.

sufficient time for the starting transients to damp, a minimum burn time was specified. The accuracy achieved by the first midcourse maneuvers performed during Mariner flights eliminated the need for a second correction.

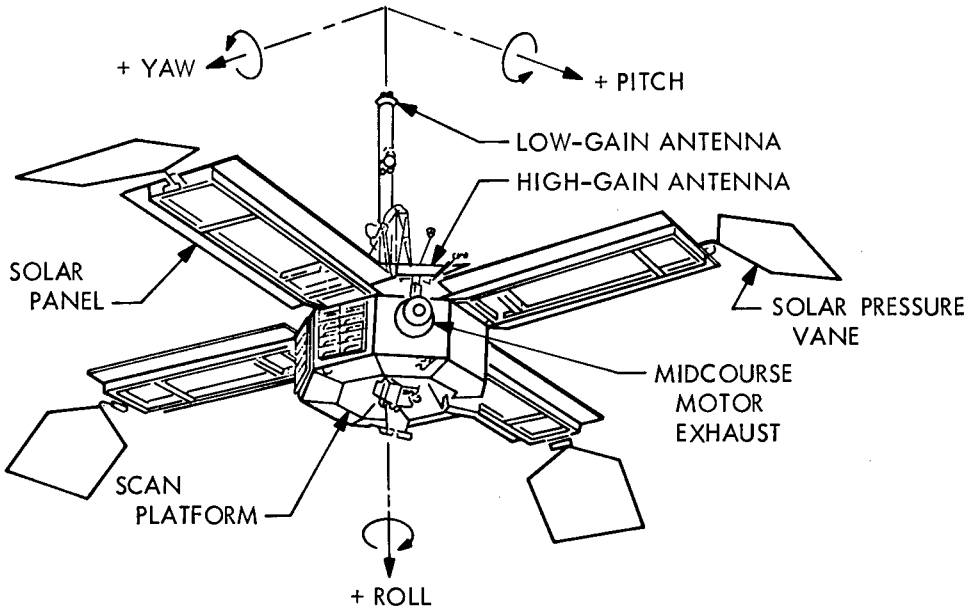

Figure 12.–Mariner 4.

2.3.2.2 Fast Gimbal

A gimbaled engine with a fast actuator (see table 3) provides the capability for controlling attitude by directing the thrust vector. Many launch vehicle TVC designs use fast-gimbaled liquid-rocket engines. The design considerations and potential problem areas are widely discussed in the open literature such as reference 26. The discussion in this section will be devoted to a number of examples which illustrate the problems experienced by various spacecraft TVC systems.

The Agena vehicle, used for docked operations with the Gemini 8 spacecraft, encountered attitude-control transients associated with center-of-mass offsets. The Agena attitude-control system had been modified to compensate for structural vibration effects encountered in the docked configurations. Lead-lag compensation eliminated the vibration instability problems, but introduced a long time constant of approximately 100 sec in the response. During undocked thrusting maneuvers, slowly decaying yaw attitude transients severely degraded the accuracy in obtaining commanded velocity changes. Consequently, additional burns were required to adjust the orbital velocity. These errors were caused by the slow dynamic response of the control system in correcting transients due to a large offset of the center of mass in the yaw direction from the thrust vector. Subsequent Agena vehicles carried lead ballast to reduce the center-of-mass offset and thus minimize attitude deviations during engine burn (ref. 32).

The Apollo CSM (fig. 8) used a digital autopilot to generate control commands to the fast-gimbaled service propulsion engine. One of the features of the digital autopilot was the reduction of attitude and velocity errors by compensating for thrust misalinement. Because the spacecraft mass center shifted slowly during a burn due to propellant expenditure, a thrust misalinement correction loop was developed. The function of the loop was to estimate the torque from thrust misalinement and to correct it periodically. In addition, at the time of "engine-off command," a final estimate was made and stored for initializing the next burn (refs. 21 and 34).

The autopilot design for the Mariner Mars '71 orbiter includes a "path guidance" or trim loop to reduce velocity errors due to the thrust vector being directed through the shifting center of mass. The spacecraft roll axis, Z, is initially directed along the desired thrust direction, r, but the gimbaled engine directs the thrust through the c.m. after an initial transient as shown in figure 13. This thrust angular error, ϕ, is commanded by the autopilot and is available as an input to the added trim loop. The result is to alter the roll axis by $-\phi$ and thus bring the thrust vector

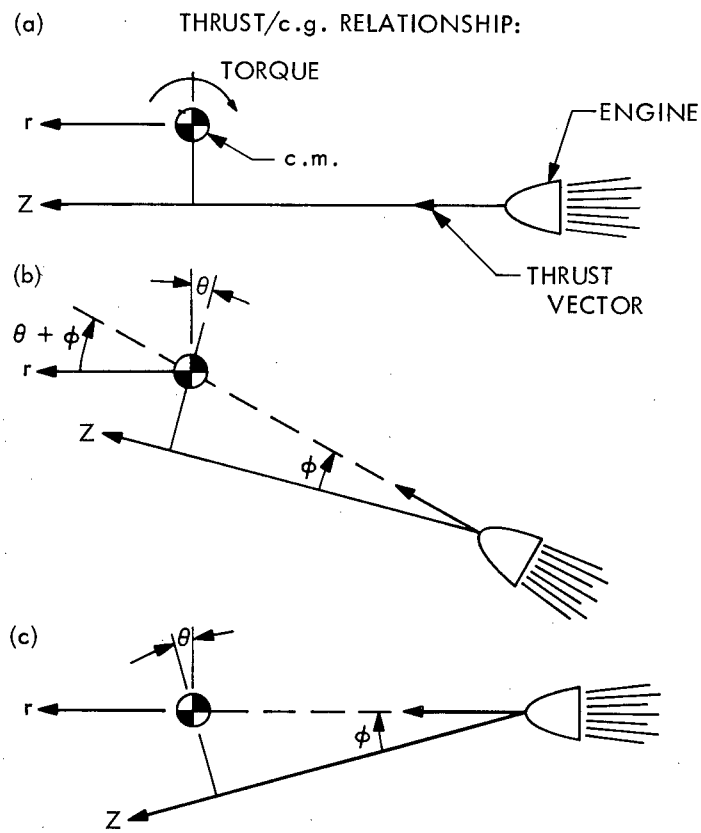

Figure 13.–Autopilot system operation: (a) initial conditions; (b) transient conditions; (c) steady-state conditions.

2.3.2 Thrust Vector Control

Spacecraft whose missions involve numerous and varied thrusting maneuvers, for example, gross orbital and trajectory changes, usually require a large thrust magnitude. This large force can be used advantageously to produce control moments on the vehicle by deflecting the thrust so that it has a moment arm with respect to the spacecraft center of mass. The technique is called thrust vector control (TVC). (See, for example, refs. 26 and 27.)

TVC is provided in two ways: (1) deflecting the thrust vector by mechanisms within a non-gimbaled engine; and (2) gimbaling the engine. The class of gimbaled systems is subdivided on the basis of actuator rate as "fast" or "slow" (see table 3). A fast rate is used to provide attitude and translational control simultaneously with the translational thrustor. A slow rate is used primarily to trim thrust misalinement of the translational thrustor with the basic attitude control provided by a separate set of thrustors.

2.3.2.1 Thrust Deflection

The Ranger spacecraft shown in figure 11 required a midcourse maneuver which was performed with an open-loop guidance procedure that was initiated by ground command. The midcourse maneuver engine was located in the spacecraft central body with the thrust axis along the Z-body axis. The attitude-control system contained an autopilot loop to maintain the thrust vector of the midcourse engine through the spacecraft mass center. Stabilizing torques were supplied by deflecting the thrust of the engine with jet vanes. Attitude errors were sensed by gyros, and fed to the autopilot which controlled jet vane position. Thus, the autopilot corrected any initial attitude errors due to the deadband of the attitude-control system and minimized the effect of disturbance torques. Analysis of the autopilot included consideration of the dynamics of the jet-vane actuator loop and of the relative motion of the two solar arrays and dish antenna due to flexibility in their attachments (refs. 28 and 29). The autopilot performed without difficulty for the Ranger series of flights.

During the midcourse maneuver of the Mariner 5 Venus flyby mission, the incremental velocity was approximately 5% less than commanded. Examination of the limited telemetry data indicated the possibility of anomalous autopilot operation. Ground test revealed that the jet vanes which were controlled by the autopilot caused a gas impingement on the jet-vane support ring resulting in degraded thrust performance. This was demonstrated in both actual hot firing and computer simulations. For Mariners 6 and 7, the support structure was redesigned to eliminate the interaction due to the impingement, and both spacecraft successfully performed their midcourse corrections (ref. 30). Jet vanes offer the advantages of three-axis control using only the thrust deflection system, light weight, and high frequency response ($\sim$ 40 Hz).

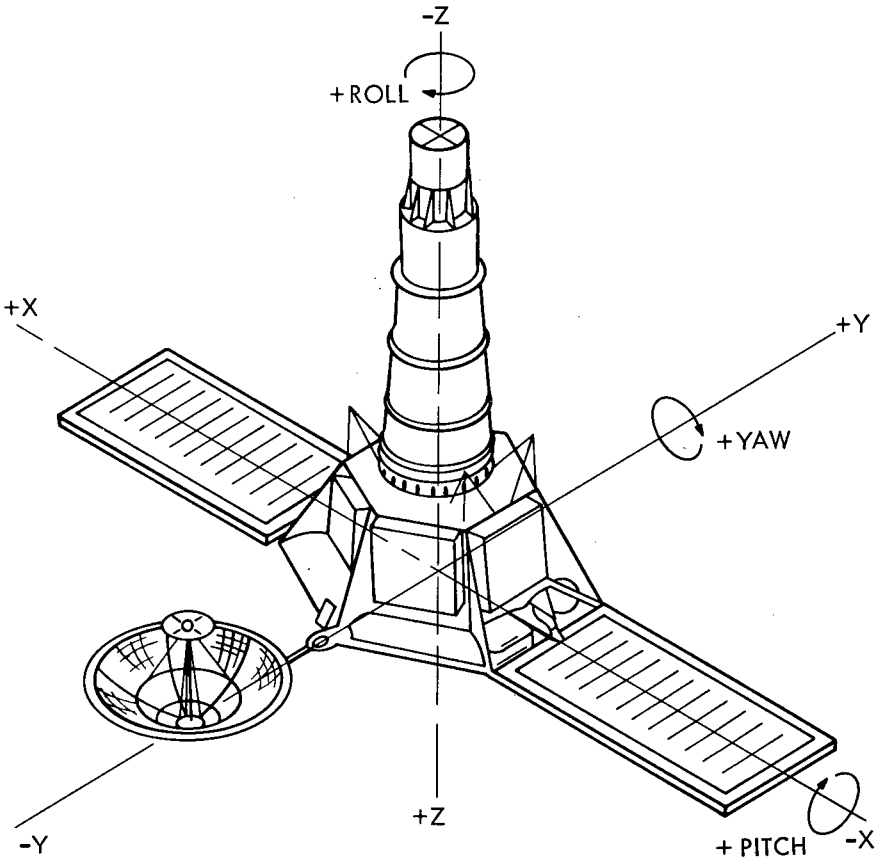

Figure 11.–Ranger.

A problem common to all spacecraft using TVC is that of transients caused by engine ignition and thrust tailoff which can result in oscillatory response of the attitude-control system. Difficulties of this nature were encountered in the design of the Mariner Mars spacecraft which used TVC provided by thrust deflection. The Mariners 4, 5, 6, and 7 spacecraft basically were modified Ranger spacecraft. The primary changes were modification of the engine to provide the capability for two midcourse burns (ref. 31) and relocation of the engine from the principal spacecraft axis (roll) to a location between the pitch and yaw axes (fig. 12). Analysis of the Mariner autopilot included consideration of the structural dynamics of the solar panels and a scan platform. The results of a computer simulation indicated that the structural dynamics of the scan platform when free to rotate could cause autopilot transient response during the ignition and thrust tail-off portions of the midcourse burn. The transient attitude response could cause a significant percentage error in the required velocity increment for short burns (several tenths of a second). Studies showed that the accuracy of these maneuvers was almost solely dependent on the orientation of the spacecraft prior to start of the thrusting maneuver. Error sources included the spacecraft position in the limit cycle deadband at the start of orientation, gyro drift during orientation, and spacecraft position in the limit cycle deadband at the start of the thrusting maneuver. To provide

back to the original inertial attitude. The trim loop was initially used to obtain greater accuracy during the long orbit insertion burn, but also increased the transient response of the system (ref. 33). This loop served the same function as the Apollo CSM loop.

The Lunar Orbiter (fig. 14) utilized fast-gimbaled TVC for thrusting maneuvers while on a translunar trajectory, for lunar orbit insertion, and while in a lunar orbit. The TVC subsystem controlled the spacecraft pitch and yaw attitude during maneuvers only. Roll attitude was maintained by fixed gas jets. Since tight control of roll attitude was not required during thrusting maneuvers, attitude-control deadbands of the gas jets were increased from 0.2 deg to 2.0 deg during engine firing to conserve nitrogen gas. The design features of the Lunar Orbiter TVC are summarized in table 5 (ref. 20).

Attitude control during thrusting maneuvers of spacecraft in a docked configuration has been complicated by the excitation of structural bending in the docking structure. Stability studies performed for the Gemini/Agena docked configuration (fig. 15) revealed that inadequate gain margins existed when the Agena control system was being used because of the excitation of structural bending. The Agena control system was modified by altering an autopilot lead-lag compensation network to yield adequate gain margin. The structural integrity of the Apollo CSM/LM docked configuration (fig. 15) was an essential concern in the design of the autopilot. The attitude-control torques of the gimbaled SPS engine were capable of exciting the bending modes to amplitudes which exceeded the strength of the docking latches. Because of uncertainty in predictions of structural parameters, the autopilot was designed to be stable for a comparatively wide range of first bending mode frequencies. The Apollo CSM/LM TVC design was verified by extensive simulation and test, including an in-flight excitation. The evaluation of TVC during docked maneuvers for both the Gemini/Agena and Apollo CSM/LM spacecraft is summarized in reference 2. Docked maneuvers were successfully performed during the Gemini 9–12 and the Apollos 9–13 missions, including maneuvers in lunar orbit on Apollos 10, 11, and 12.

Inertial loads on the engine actuator, due to an excited vehicle bending mode accelerating the engine gimbal-mount points, result in engine rotations about the gimbal due to actuator compressions and elongations. If the actuator were a simple spring, the resulting normal thrust forces would be orthogonal to the sinusoidal gimbal-point velocities, such that there would be no net energy flow between the thrust force and any structural resonance. However, due to actuator dynamics (active damping is intentionally included), the phase angle of the normal component of thrust, relative to gimbal-point motion, will be different from the 0- or 180-deg phase relationship required of an oscillator. The result is a change in the damping factor of the coupled resonance. This change can be either toward increased stability or toward instability depending on the characteristics of a particular mode at the gimbal point, engine inertia, engine mass, and distance of engine mass center from engine gimbal plane. This type of instability (which has been termed "dog-wags-tail") was detected in a once proposed combination of the Apollo command and service module, docked to an SIVB and thrusting with the service propulsion engine. In this case, the coupled structure-engine represents an unstable "plant," before any control loops are closed, and can only be stabilized by the control system via a large active feedback at the critical frequency. Gain stabilization cannot be used in this case.

TABLE 5.–Lunar Orbiter TVC System Design Summary (ref. 20)

Major features	Comment
1. Thrust vector chosen over fixed engine with thrustors on end of solar panels.	1. Weight saved and c.m. control requirements reduced (see Table 3).
2. Electromechanical position actuator chosen.	2. New development; compensation design simplified.
3. Structural and propellant coupling used in dynamic mathematical model.	3. Propellant slosh not a major problem; structural coupling of solar panels and antenna strong due to close, but unequal, frequencies; structural oscillation excited by engine ignition.
4. Dual lead-lag compensation used, resulting in severe noise suppression problems.	4. Dual lead-lag used to phase stabilize structural coupling; resulting noise sensitivity required extensive filtering and widening of actuator deadband.
5. Position actuator chosen with switching of electrical power for velocity maneuvers.	5. Start-up transients reduced; alinement with c.m. between burns maintained.
6. c.m. shifts avoided.	6. No migration of propellant between paired tanks which would shift CM occurred during flight.
7. System design verified by simulation.	7. System test conducted using analog simulation rather than spacecraft hot firing; free-free structural test used to verify structural modes.

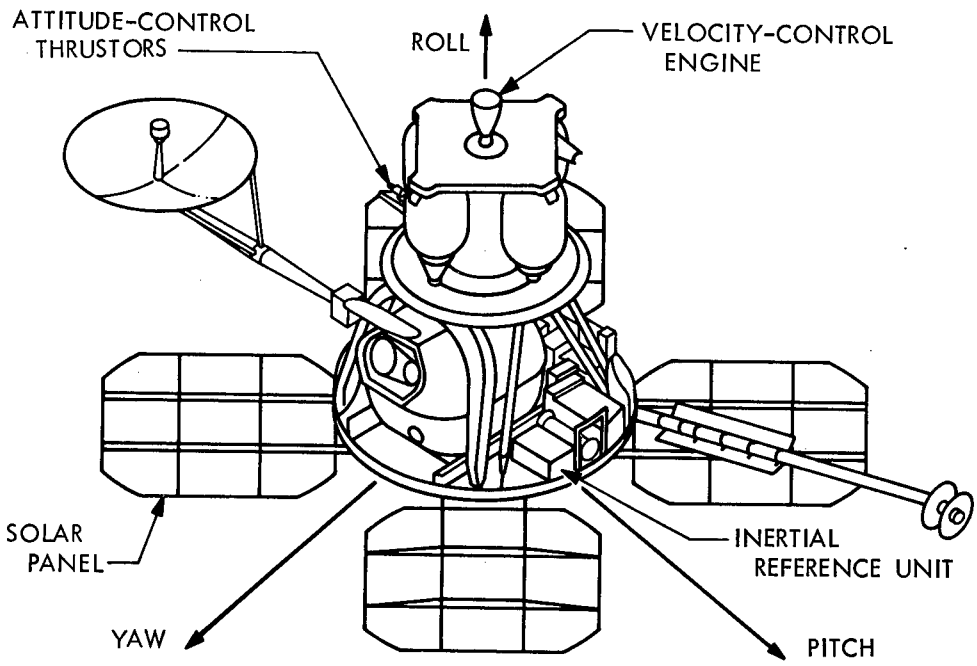

Figure 14.–Lunar Orbiter.

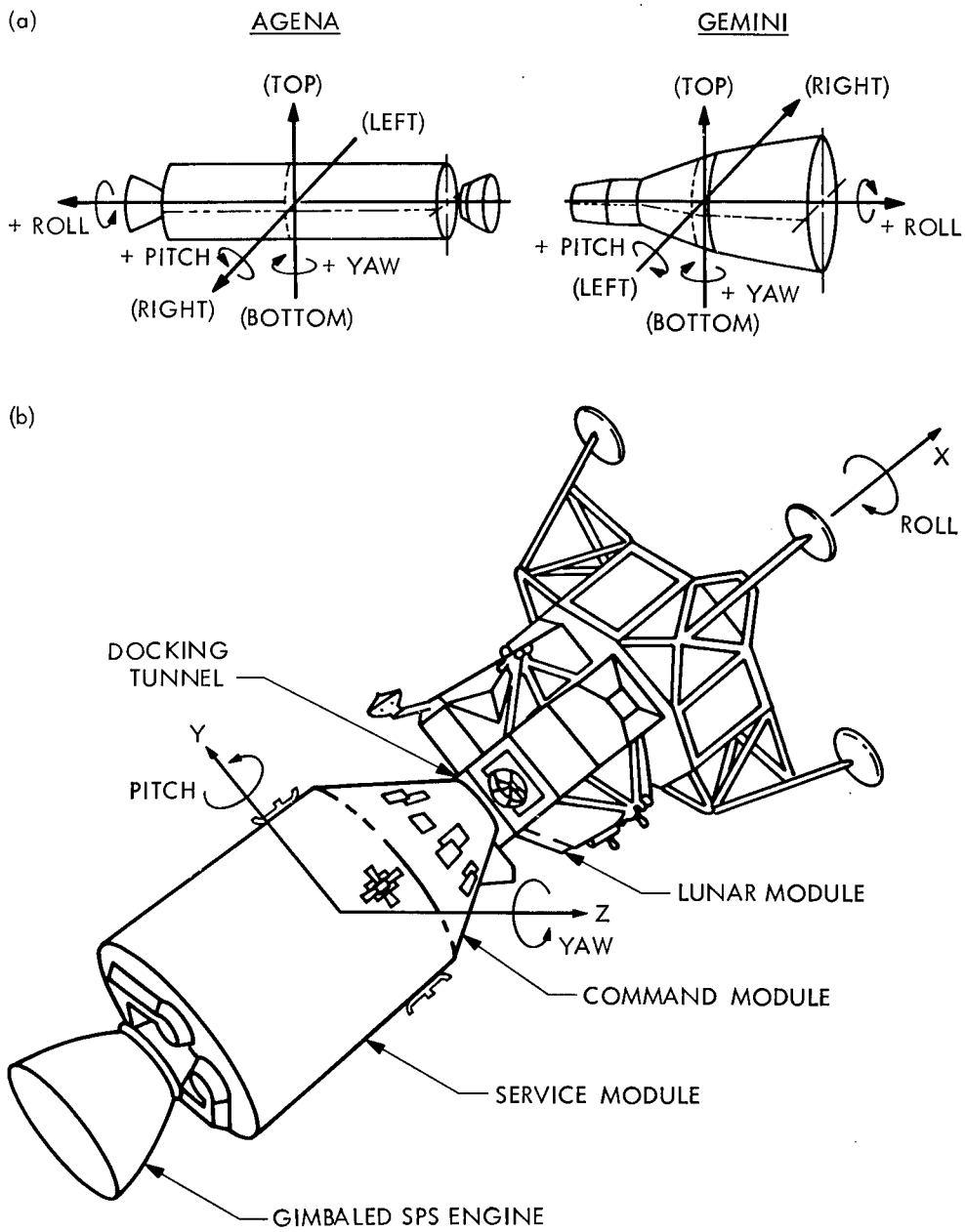

Figure 15.–Spacecraft docked configurations:
(a) Gemini/Agena;
(b) Apollo CSM/LM.

2.3.2.3 Slow Gimbal

The Apollo LM descent stage shown in figure 16 was equipped with a slow-gimbaled liquid-rocket engine controlled by a digital autopilot (refs. 24 and 25). The original design concept was to provide attitude control about all axes by the attitude-control thrustors, and to use the main engine TVC only to track any motion of the center of mass. However, by making use of the capability of the digital controller, it was possible to develop a time-optimal attitude-control law which used the gimbaled engine to control attitude about two spacecraft axes (attitude control about the thrust vector was provided by the attitude-control thrustors). Had a minimum time-control law not been used, attitude control utilizing the very slow gimbal would not have been practical (ref. 35). The effectiveness of the slow-gimbal attitude control was demonstrated on the Apollo 9 mission when the descent engine was used to maneuver the docked CSM/LM. Although this maneuver was not a primary function of the descent propulsion system, it was performed with a cutoff velocity error of less than 0.3 m/sec (1 ft/sec). This redundant translational thrusting capability of the docked configuration was fully exercised during the Apollo 13 mission following the incapacitation of the SPS, the primary thrusting system.

Apollo LM attitude control was provided by either the slow-gimbal TVC or by the small liquid-rocket attitude-control system. The slow-gimbal TVC provided two-axis control, whenever possible, to limit attitude-control thrustor firings and to minimize thrustor propellant expenditure. However, this mode provided full attitude control, that is, angular position, rate, and acceleration, only within certain limits. For large attitude errors or angular velocities, the attitude-control thrustors were necessary to achieve sufficiently rapid control (refs. 24 and 25).

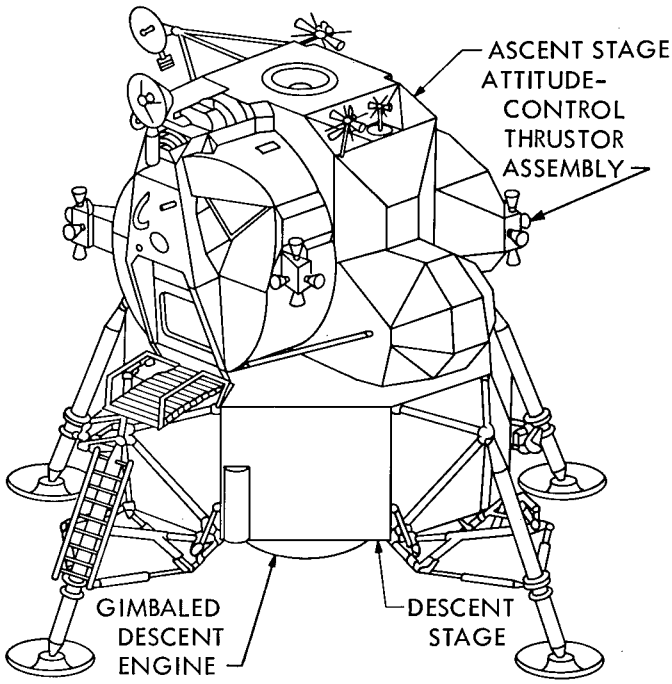

Figure 16.–Apollo lunar module descent configuration.

3. DESIGN CRITERIA

Spacecraft attitude-control systems shall be designed to point the thrust vector so that the net applied force produces the required velocity changes efficiently, accurately, and without violation of any design and operational constraints imposed by vehicle, mission, or crew safety considerations. The design should achieve an acceptable compromise among performance, complexity, power consumption, propellant expenditure, weight, volume and reliability; should be reasonably insensitive to variations of environmental and vehicle parameters; and should have inherent versatility to handle limited changes in mission requirements and to accept deviations from nominal operational conditions and from nominal design parameter values as large as practical. The design should make effective use of sensing, data processing, propulsion, and display equipment required for other mission phases, so a minimum of additional equipment and expendibles are required for attitude control during thrusting periods. For manned systems, it should meet crew safety requirements and make effective use of the crew's capability for monitoring, backup, and/or manual control.

3.1 Performance

The attitude-control system shall be capable of the following:

(1) Maintaining thrust-vector pointing accuracy, in the presence of all anticipated perturbations, within tolerances established by sensor limitations, thermal considerations, structural load limits, the propellant budget, and allowable position and velocity errors at the completion of the thrusting maneuver.

(2) Damping initial transients which result from off-nominal conditions or thrustor misalinement without exceeding structural load limits or adding significantly to the thrust-vector error.

(3) Providing attitude control without exceeding specified propellant allocation.

3.2 Design Considerations

The initial design of the spacecraft attitude-control system should include consideration of thrusting maneuvers as well as coasting flight orientation requirements. Designs should be evaluated using the following considerations.

3.2.1 Spin Stabilization

The considerations are as follows:

(1) The effects of thrusting maneuvers on the spin rate due to causes such as thrust misalinement, jet damping, and thrustor mount compliance must be evaluated if the variation of spin rate is critical.

(2) Spin axis dynamic motion as evidenced by nutation and precession, and spin axis misalinement caused by dynamic unbalance must remain within specified limits during thrusting maneuvers.

(3) An adequate margin of gyroscopic stability must be provided for all permissable variations in mass properties.

3.2.2 Passive Control

The considerations are as follows:

(1) Thrusting systems for passively stabilized spacecraft should be designed to minimize the disturbance torques resulting from thrustor operation.

(2) The effects of structural flexibility on the location of the mass center and on inertial characteristics must be considered, particularly for gravitationally stabilized spacecraft.

3.2.3 Active Systems

The considerations are as follows:

(1) Closed-loop attitude-control systems must exhibit acceptable transient response.

(2) With a gyro-stabilized inertial reference unit, the spacecraft attitude transients must be adequately controlled so as to avoid either loss of attitude reference or gimbal lock.

(3) For manned systems, the handling qualities of the manual mode must be considered.

(4) Switching transients from thrust-vector control to other control phases must not exceed initial condition limits for each phase.

(5) Maximum torque capability of the control system must be sufficiently large to correct initial condition errors before attitude tolerances are exceeded.

(6) The control logic must be consistent with the minimum impulse size required for reliable combustion in the thrustors and must not exceed the lifetime specification of the thrustors.

(7) Limit cycle amplitudes and frequencies must be within specified limits.

(8) Excitation of structural responses must not result in loads which exceed design levels.

(9) Inertial loads on engine actuator due to excited vehicle bending modes should not result in instability ("dog-wags-tail" concept).

3.3 Design Verification

Attitude-control system performance and compliance with explicit system specifications should be demonstrated by a suitable combination of analysis, simulation, component tests, system tests, and flight test (where required) considering all anticipated flight configurations and thrusting maneuvers to be performed.

3.3.1 Analytical Studies

Analytical studies are to be performed using adequate mathematical models to demonstrate attitude-control system performance and stability during thrusting maneuvers as well as compliance with mission requirements and specifications. Failure analyses should be conducted to determine the effect of thrustor and control system component malfunction on the performance and flightworthiness of the control system.

3.3.2 Simulation Studies

Simulation studies are to be conducted whenever available analytical techniques are inadequate, when testing becomes impractical or impossible, or when an independent flight readiness evaluation is warranted. Under these circumstances, simulation studies are to be used as a design tool as well as to demonstrate system performance, stability, and compliance with design requirements and specifications. To achieve realistic system response, as much flight hardware as is feasible should be included in a flight simulation.

3.3.3 Tests

Tests are to be conducted to insure that the control system satisfactorily meets system performance and stability requirements. Preliminary tests are to be conducted during the development program on a timely basis, so that maximum utilization can be made of the results for system improvements. If the spacecraft is to be used for manned missions, flight tests are to be conducted as required to demonstrate compliance with all crew safety criteria. The ease of test and checkout is to be considered in the selection and design of the control system.

4. RECOMMENDED PRACTICES

4.1 Analytical Studies

4.1.1 Conceptual Design

In the conceptual design phase, various attitude control methods are investigated in a preliminary manner to determine which method best serves the mission and spacecraft requirements (e.g., ref. 36). Some factors to consider are the following:

- Total impulse required
- Disturbance torques
- Magnitude, accuracy, and type of thrusting maneuver to be performed
- Manual or automatic system
- Gimbaled or fixed engine
- Number, location, and orientation of thrustors
- Type and geometry of actuators
- Type and location of sensors
- Torque levels available
- Control logic
- Analog or digital controller and associated weight, power requirements, reliability, and versatility
- Instrumentation and ground processing of flight data for postflight evaluation

Conceptual design involves a series of tradeoff decisions among significant factors to obtain a compromise design which best meets performance requirements (e.g., ref. 37). Of utmost importance is identification of the important factors affecting the tradeoff. In some cases, overlooking subtle effects such as structural flexibility or external disturbances may cause trouble.

A typical design tradeoff decision involves the burn time of attitude-control thrustors to meet reliability and performance specifications. The total impulse for each burn is usually fixed so the selection of engine thrust size and related burn time involves a tradeoff between attitude-control capability and guidance system requirements. A large engine thrusting for short periods places stringent requirements on the attitude-control system because initial transient attitude errors and turning rates are accentuated. Since the guidance system has little time for correction in terms of initial high thrust and short burn times, the accuracy of the thrusting becomes directly related to the accuracy of attitude control. Conversely, relatively inaccurate attitude control may be tolerated for low thrust and long burn times, with reliance placed on the guidance system to reduce errors.

4.1.2 Analytical Techniques

Once the control system configuration to satisfy overall mission requirements is designated, particular system parameters such as gains, deadbands, and saturation levels are selected. The type of analysis to be used in determining these is dependent on the type of spacecraft and on the major constraints and requirements of the control system (ref. 38). It is recommended that, whenever possible, the system be modeled initially as a linear system and that the stability and response be analyzed by classical transform methods (refs. 39 to 42). If the control system and guidance system bandpasses are sufficiently separated, initial attitude-control system analysis may be performed independently of the guidance loop.

A complete coupled model, including flexible-body dynamics and propellant slosh and actuator dynamics (where applicable), should be developed as early as possible (see, for example, refs. 43 and 44). The interface of the control system with the guidance system and with backup modes (where applicable) should be included in the coupled model. Particular attention should be given to the modeling of thrustor-mount dynamics and to possible variations in inertia properties. In addition, external disturbances and the effects of propellant venting or other mass expulsion should be modeled.

The mathematical model is then used to evaluate and refine the control system design. Basic stability should be determined and, if appropriate, gain and phase margins evaluated. The effects of the flexible structure and propellant-slosh dynamics on system performance should be examined and the need for tank baffles should be decided. External disturbance effects and sensor noise inputs should be included in the analysis. Variations in vehicle inertia properties are investigated, and the control system designer should provide tolerances on the allowable variation in location of vehicle center of mass and other inertia properties.

Analysis then progresses to the investigation of nonlinear effects (refs. 45 and 46). Limit cycle performance should be determined with the help of quasi-linear methods. Limit cycle amplitudes and frequencies should be kept within bounds determined by mission requirements and the propellant budget (e.g., ref. 47). Deadband, hysteresis, friction levels, and digital quantization should be included in the investigation. Large signal effects involving control limits, saturation and controllability should be examined also.

In parallel with system analysis, studies should be carried out to generate data-base tolerance distributions. It is recommended that the investigations include (as applicable) determination of the following:

Structural frequency uncertainties
Structural mode shape uncertainties
Propellant-slosh characteristics
Moment-of-inertia variations
Thrust variations
Center-of-mass variations

Thrustor misalinements
Initial condition variations
Attitude and rate deadband characteristics
Computer effects due to transport lags and finite word length
Gimbal rate limits
Gimbal dynamics uncertainties
Electronic gain and bias variations
Sensor gain variations, null variations, misalinements, and drifts
Burn duration errors

4.2 Simulation Studies

Simulation studies of the control system should be conducted throughout the development phase to insure that the system satisfies mission requirements, performs satisfactorily, and is flightworthy. As a result of these studies, in-flight instrumentation should be updated to include measurements for checking trouble areas. For manned spacecraft, it is necessary that a complete simulation of the entire mission, including off-nominal and abort situations, be developed.

Two types of simulation are defined: subsystem simulations and functional simulations. Subsystem simulators should be developed to study particular control system components or to evaluate performance of inner control loops. The subsystem simulation has in the past been done on an analog computer; however, digital computer simulations are now more commonly used, particularly if the equipment being simulated contains logical elements. Functional simulations should be used to study overall system performance and they are usually much more elaborate. Although most functional simulations are digital, they may include analog sublevel simulations, and in many cases actual hardware components are included as part of the functional simulation (e.g., refs. 48 and 49).

Functional simulations including actual system components are recommended because they are especially valuable for providing tests of equipment interface compatibility (refs. 49 and 50). In addition, for manned systems they provide a means for studying the man-machine interfaces, and they may be used for early flightcrew training.

If the control system includes an onboard computer, a ground-based computer simulation of the vehicle computer should be developed (ref. 51). Simulation of the onboard computer permits a detailed examination of the internal operation of the computer program which normally would not be possible with the flight hardware. This technique, referred to as a bit-by-bit digital simulation, is useful for isolating internal computational difficulties or improper logical branches which would otherwise be inaccessible. This form of simulation has been successfully applied in the Apollo program to verify software programs (ref. 52).

The functional simulation should be used to evaluate the interface of the control system with other spacecraft subsystems, particularly the guidance system. The simulation should also include detailed representations of the sensor and such vehicle characteristics as flexible-body and propellant-slosh dynamics. Off-nominal conditions should be simulated, particularly for manned systems, to determine the degradation in performance. For manned systems, it is recommended that off-nominal conditions be considered as early in the program as possible. A Monte Carlo simulation of the system, in which the values of all system parameters are randomly selected within their tolerance bands, is recommended if parameter studies of the off-nominal conditions become unwieldy.

The functional simulation should be used to determine the effects of failures, particularly thrustor malfunctions, on performance and to provide a basis for determining redundancy requirements (e.g., ref. 53). The control logic should include provision for adequate performance in the event of a thrustor failure. If reliability requirements cannot be insured with a single system, redundant and/or multimode systems should be provided. Redundancy should be limited to the degree necessary for meeting the reliability or safety goals.

4.3 Tests

Qualification and acceptance tests should be performed on all components and subassemblies to insure compliance with requirements. The complete control system should be tested to verify proper functioning of the system and to determine system characteristics. The test model should contain as much hardware as feasible including control system, sensor, and propulsion equipment. If possible, the control system should be tested with the whole loop operating. The latest data on vehicle and control system configurations should be used where actual hardware is not used. All actuation equipment used should be loaded as realistically as possible, including bias forces where applicable (ref. 54).

Testing to determine mass properties of the fully assembled spacecraft is particularly important. These tests should include static and dynamic balancing and should determine the weight, moments of inertia, and center of mass (refs. 55 and 56). The mass properties should be determined with propellant tanks both full and empty, and for other propellant loadings of interest. The tests should be performed with appendages stowed and, if possible, with appendages deployed. Mass property testing should be repeated before and after shipment of the spacecraft. Engine alinement also should be determined experimentally (ref. 57).

Special tests, including flight tests, may be required based on results of performance and stability studies (refs. 33 and 58). Special attention should be given to testing for off-nominal parameters in order to evaluate the degraded performance of the system.

Tests should be conducted to supplement functional simulations in order to determine the effects of failures, particularly actuator and thrustor failures, on the system. These tests are useful for investigating the response of system components to a failure in the system. If system testing is not feasible, it is recommended that a combined simulation and test be conducted wherein vehicle dynamics are mathematically simulated, and control and propulsion system equipment are included in the loop to the extent practical.

Testing of interface systems should be performed on a timely basis and the results made available to the control system designer. The control system designer should specify the accuracy he requires in test results. These should be specified and completed as early in the development program as possible for those parameters which are most difficult to evaluate analytically, such as structural characteristics including mode shapes, frequencies, and damping; propellant dynamic characteristics; equivalent masses; sensor noise; and actuator dynamics (e.g., ref. 59).

If, after all analyses, simulation, and ground tests have been completed, the flightworthiness of the spacecraft or crew safety is in question, then a flight-test program is recommended. Provision should be made to facilitate postlaunch evaluation of the spacecraft to verify satisfactory performance or to identify the cause of in-flight failure and to recommend necessary remedial action (ref. 60).

4.4 Specific Recommended Practices

Design and flight experience with spacecraft capable of performing thrusting maneuvers has resulted in a number of practices and considerations developed to achieve satisfactory attitude control. *Since these practices were developed for particular vehicles, their applicability to other vehicles must be carefully evaluated.*

4.4.1 General

(1) Maintain current and accurate properties of the spacecraft and alternate configurations.

(2) Determine the weight and balance of the spacecraft.

(3) Define all sources of thrust misalinement including:

(a) Misalinement of the thrust vector relative to the thrustor.

(b) Mechanical misalinement of the thrustor.

(c) Compliance of the thrustor support structure.

(4) Maximize the distance between the center of mass and the point of application of the control force. For example, a gimbaled engine should be as far away from the center of mass as the configuration envelope permits in order to reduce gimbal angle deflection requirements for center-of-mass uncertainty; or fixed control thrustors should be located at the maximum length to minimize thrustor size and control propellant required.

(5) Minimize initial conditions such as attitude error relative to desired thrust vector and angular rates prior to thrusting. For gimbaled engine TVC, a specified or zero position of the gimbal actuator can be commanded prior to engine ignition.

(6) Determine that propellant expenditure is consistent with system constraints and performance. Compare worst-case results to an ideal case to include propellant requirements.

(7) Do not complicate the system beyond what is necessary to satisfy system requirements and the criteria of section 3.

(8) Determine performance in the event of thrustor failure.

(9) Hold limit cycling or hunting about the average direction to small angular amplitude, rate, and acceleration to avoid excessive error, excitation of the flexible spacecraft modes, excessive propellant expenditure, and excessive effector wear.

(10) Keep the residual conditions at completion of the maneuver within the control capability of the attitude-control system and reference attitude sensors so as to not require excessive expenditure of attitude-control propellants.

(11) Provide capability to check out the control system and ascertain proper operation of the elements of the system before engine ignition. This can be done either by telemetry for an unmanned spacecraft or by display on a manned spacecraft.

(12) Time modulate cold-gas jets rather than thrust modulate. The pulsing characteristics should be consistent with expected lifetime of the jets. Maximize pulse width to minimize the number of firings for counteracting external torques. Limit cycle behavior minimizes the number of firings for minimum pulse width.

(13) Determine the minimum impulse that the hardware is capable of producing without valve chatter. In addition, consider the effects of minimum impulse on weight, power requirements for valve opening, and reliability of valve operation.

(14) Consider the effect of thrust impingement on thermal design and thrust degradation.

(15) Consider jet damping of thrustors such as discussed in references 61 and 62.

4.4.2 Spin Stabilization

(1) Provide adequate gyroscopic stiffness through sufficient spin rate or spin-axis moment of inertia to prevent significant disturbance of the angular momentum vector. If the spacecraft mass properties change during the mission, care should be exercised to preclude spin-to-transverse axis moment-of-inertia ratios approaching values near 1.0. Specifically, an approximate rule of thumb for all spin controlled spacecraft is:

$$1.05 < \frac{I_{spin}}{I_{transverse}} < 0.95$$

with due regard to the stabilization requirements (no energy dissipation) for inertia ratios less than 1.0.

(2) Keep track of inertia ratios and location of center of mass.

(3) Consider all effects of thrust on spin dynamics, including nutation, spin-axis orientation, spin rate, and attitude perturbation.

(4) Allow sufficient firing time to permit thrust to reach steady-state value.

(5) Determine the effects of energy dissipation on the spacecraft stability. See reference 2 for recommended practices for energy dissipation through structural flexibility.

(6) Apply thrust by either of two commonly used techniques:

   (a) To use axial thrust such as for apogee boost, first orient the spin axis (nominally identical with the thrust axis) to the desired velocity increment direction. A continuous axial thrust is applied until the desired velocity change is achieved. The spacecraft is then reoriented to the desired attitude. This technique should not be used when propellant expenditure for reorientation is a significant fraction of the propellant expended during the thrusting maneuver.

   (b) To apply small velocity increments such as for midcourse correction, leave the spacecraft with its spin axis in its nominal orientation. Thrust is applied continuously in the axial direction and pulsed in the radial direction, so that the vector sum of the component velocity increments is the desired velocity increment.

(7) Account for engine thrust effects on spin rate. If spin rate is critical, bias initial spin rate to account for thrust effects.

(8) In addition to the above, for dual-spin spacecraft:

   (a) Try to maintain the center of mass on the thrust axis (spin axis).

   (b) Let the despun section spin up to an acceptable rate during apogee boost. Despin after orbital insertion.

   (c) Evaluate the effect of *all* energy dissipaters on both the spinning and despun portions.

(d) Evaluate the effects of bearing compliance.

(e) Evaluate the effects of "spinning up" the despun section during apogee boost maneuvers.

4.4.3 Passive Control

If the desired stable vehicle orientation can be disturbed by thrustor torques, provision should be made for reorienting the vehicle, or the mission plan should accommodate the settling time required for reorientation.

The provisions are as follows:

(1) Determine the vehicle response to thrustor duty cycle; avoid structural resonances.

(2) Establish whether variations in location of center of mass are important; if so, eliminate the variations to the extent possible. Consider the use of gimbaled thrustors as a possible solution.

(3) Check effect of worst-case misalinement of thrustors.

(4) Increase the spacecraft's moments of inertia normal to the thrust axis to a maximum value consistent with other mission constraints.

(5) Use a maximum thrust for a minimum period of time to obtain the required total impulse (ref. 63).

4.4.4 Active Control

4.4.4.1 Pointing Accuracy

(1) Evaluate the system design in a simulation which incorporates as many real system hardware elements or performance parameters as practicable to determine off-nominal performance.

(2) Combine the normal or 3-σ tolerances of the autopilot elements in a statistical manner with the most favorable and least favorable center-of-mass location as propellant is expended. Perform the following types of statistical analysis of the system:

(a) *Performance.* Tabulate all system parameters which will influence pointing accuracy and combine their influences statistically to give a measure of performance. Include any steering system parameters. The performance will usually be a strong function of incremental velocity magnitude.

(b) *Stability Margin.* Tabulate all system parameters which will influence total system frequency response, determine an expected distribution from nominal for each, and combine their influences statistically to give a measure of stability. Particular attention should be given to the tolerances placed on vehicle bending dynamic parameters, considering the method by which they were generated.

4.4.4.2 Actuators

(1) Use a nonlinear model for gimbal actuator analysis. Consider the actuator duty cycle, and the spectrum and amplitudes of allowable signal content sent to the actuator. A position servo actuator has a distinct advantage in being observable even by low data-rate telemetry. This model should include actuator compliance and stiction.

(2) Select control actuation to minimize control system complexity whenever possible. For example, control actuators coincident with the reference sensor axes avoid the necessity for coordinate transformation of control signals and allow isolation of one control channel from another with attendant improvements in reliability, ease of checkout, and simplicity of design.

(3) Establish preliminary actuation system requirements as early as possible.

(4) Consider the effects of bending in pressurized propellant lines when choosing actuators for small engines.

(5) Consider friction torques in gimbal blocks and bearings.

(6) Consider effect of excited vehicle bending modes on engine actuator and resultant instability (dog-wags-tail concept).

4.4.4.3 Engine

(1) Determine the roll torque caused by misalinement between multiple engines (when they are used). Engine "swirl" torques are usually very low for liquid engines or solid engines. Ablative cooled engines may require a closer examination since erosion may occur in a spiral pattern.

(2) When control axes are about an axis of symmetry, use similar equipment for the two axes controlled by thrust deflection, if possible.

(3) When the gimbal angle is required to accommodate center-of-mass offset, do not exceed 1-deg total.

(4) Consider the effects of engine characteristics including startup and cutoff transients.

(5) Consider the physical properties of the engine including alinement, ablative effects, and reflected engine-inertia loads (tail-wags-dog concept); see reference 64. "Tail-wags-dog" frequency should be high relative to control frequencies.

(6) Assess sources of torque about the thrust axis (roll). On the average, these should be less than the control torque available about that axis to prevent being overpowered. However, short-term torque transients as a result of the gimbaling action on the engine should be integrated over a full cycle in sizing thrustors to control roll torques.

(7) Consider errors introduced by short burns since lateral velocity may not average to zero because the burn time may be equal to or less than the half cycle period of the rigid body response of the spacecraft. Usually the steady-state condition is reached for a long-time engine burn and the residual rates are no problem. However, consider attitude-control system initial conditions for attitude errors caused by long-term center-of-mass tracking.

4.4.4.4 Structural Flexibility

(1) Consider the effects of structural flexibility. As an initial design goal, the first flexible body mode frequency should be about five times the required rigid body frequency to permit use of conventional filter techniques. See reference 2 for additional recommended practices.

(2) Consider the structural response of the engine mount when modeling gimbaled engine actuators.

4.4.4.5 Propellant

(1) Perform a simulation with propellant-slosh coordinates initialized at maximum possible amplitude and check for violation of attitude-control performance requirements, for excessive response requirements of thrust-vector servos, and for excessive propellant expenditure rate in the gas-jet system. If the results of the worst amplitude study

indicate slosh is a problem, then the stability of the slosh modes should be examined. The slosh mode can be made stable by design. Where possible, locate the liquid between the thrust-vector gimbal and the center of mass. Multiple tanks aid in breaking up the amount of sloshing fluid. Expulsion bladders provide damping—in some designs in the range 0.1 to 0.3 of critical damping. Low-gain margin is accepted practice for the slosh-mode stability because slosh-mode amplitudes are limited by nonlinearities.

(2) If possible, select propellant tank configurations which facilitate determination of the center of mass.

(3) Determine the effects of differential heating on propellant tanks which may cause transfer from one tank to another, that is, a running center-of-mass condition.

(4) If ullage burns are required, consider the effects of propellant settling.

4.4.4.6 Sensors

(1) Choose sensor locations considering effects of structural modes and engine noise.

(2) Mount reference sensors on the spacecraft (e.g., Sun sensors, star trackers, inertial reference unit) to a predetermined alinement. This can be accomplished in typical practice to a tenth of a degree. Since many unmanned spacecraft use ground generated command programs, the exact sensor alinement can be accounted for by the software if the alinement information is available. If extreme accuracy is required, in-flight calibration should be considered early in the design.

(3) During thrusting maneuvers, provide attitude information for active control systems by inertial references. Insure that these sensors maintain their alinement, that angular freedom is not exceeded, and that excessive drift errors are not accumulated between alinement and thrusting times.

(4) Measure angular velocity by rate gyros or derive from inertial reference data. Equivalent data from different sensors should be examined for conflicting values. Filtering techniques may be used with digital systems to refine estimates of vehicle state. A description of the recursive state estimator of the Apollo LM is found in reference 24.

4.4.4.7 Stability

(1) For nonlinear systems, examine stability relative to amplitude. It is generally considered that performance is unsatisfactory if a gimbaled engine strikes its stops twice during large signal transients.

(2) Maintain maneuver error limits on the order of a tenth of a degree including limit cycle deadzones. Limit cycling of 0.1 deg is usually considered acceptable. Limit cycles and structural or slosh frequencies should be separated.

(3) Allow for the following stability margin requirements which have been found acceptable for use in *initial* analyses:

(a) For phase stabilization, allow only for structural modes whose phase characteristics will be accurately determined during tests, and only in frequency regimes where actuator performance is firmly established.

(b) For phase stabilized structural modes, use a minimum of 40-deg phase margin and 10-dB gain margin with all bending tolerances simultaneously in the worst direction and the autopilot parameters at a 1-σ tolerance level. Moving the autopilot parameters to a 3-σ level should not produce instability (zero margin).

(c) For gain stabilized modes, use a minimum of 10-dB gain margin independent of phase (10 dB below zero). Tolerance rules are the same as for phase stabilized modes.

(d) Allow for rigid-body mode (or any other phenomena whose physical characteristics have been accurately defined by test) to have a minimum of 30-deg phase margin and 6-dB gain margin with 1-σ autopilot tolerances and stability for 3-σ tolerances.

4.4.4.8 Failure Mode

In manned vehicles, the following should be considered:

(1) Provide redundancy by:

(a) Switchable redundancy

(b) Manual backup to autopilot

(c) In-flight maintenance (The controller should be designed to permit failure of the most effective thrustor.)

(2) Provide suitable techniques to allow the pilot to switch easily between manual and automatic modes without introducing undesirable transients.

(3) Include a malfunction warning system for serious or catastrophic failure modes. The reliability of the warning system should be greater than the reliability of the element being monitored.

4.4.4.9 Other Considerations

(1) Determine the misalinement or displacement of the center of mass. For a gimbaled engine, this may be calibrated and more easily be corrected in command and control software than by requiring precise mounting and alinement of reference attitude sensors, actuators, or spacecraft structure.

(2) If a digitized system is selected, consider sampled data and quantization effects. Also consider computer constraints of memory capacity and mean frame time.

(3) Provide complementary information or control on the state of the system through alternate paths where possible to enhance backup capability.

(4) Examine all mode switching or sequencing for possible false logic.

REFERENCES

1. Propellant Slosh Loads. NASA Space Vehicle Design Criteria Monograph (Structures), NASA SP-8009, August 1968.
2. Effects of Structural Flexibility on Spacecraft Control Systems. NASA Space Vehicle Design Criteria Monograph (Guidance and Control), NASA SP-8016, April 1969.
3. Spacecraft Magnetic Torques. NASA Space Vehicle Design Criteria Monograph (Guidance and Control), NASA SP-8018, March 1969.
4. Spacecraft Gravitational Torques. NASA Space Vehicle Design Criteria Monograph (Guidance and Control), NASA SP-8024, May 1969.
5. Spacecraft Radiation Torques. NASA Space Vehicle Design Criteria Monograph (Guidance and Control), NASA SP-8027, October 1969.
6. Entry Vehicle Control. NASA Space Vehicle Design Criteria Monograph (Guidance and Control), NASA SP-8028, November 1969.
7. Sierer, W. H.; and Snyder, W. A.: Attitude Determination and Control of the Syncom, Early Bird, and Applications Technology Satellites. Paper No. 67-532, AIAA Guidance, Control, and Flight Dynamics Conference, Huntsville, Alabama, August 14-16, 1967.
8. Syncom Projects Office: Syncom Engineering Report, Vol. II. NASA TR R-252, April 1967.
9. Bonomo, P. J.; Eisele, R. C.; and Schlegel, L. B.: Analysis and Summary of ATS-B Apogee Motor Ignition, Maneuvers and Attitude Determination. IBM under Contract NAS 5-10022, May 1967.
10. Neufeld, M. J.; and Anzel, B. M.: Synchronous Satellite Station Keeping. AIAA Paper No. 66-304, AIAA Communications Satellite Systems Conference, Washington, D.C., May 2-4, 1966.
11. Grasshoff, L. H.: An Onboard, Closed-Loop, Nutation Control System for a Spin-Stabilized Spacecraft. J. Spacecraft and Rockets, Vol. 5, No. 5, May 1968, pp. 530-535.
12. Noll, Richard B.; and Spenny, Curtis H.: Minimizing Spacecraft Structure/Control-System Interaction. Structural Dynamics Volume, AIAA Structural Dynamics and Aeroelasticity Specialist Conference, New Orleans, Louisiana, April 16-17, 1969, pp. 58-65.
13. Likins, Peter W.: Attitude Stability Criteria for Dual Spin Spacecraft. J. Spacecraft and Rockets, Vol. 4, No. 12, December 1967, pp. 1638-1643.
14. Mingori, D. L.: Stability Analysis of Dual-Spin Satellites. Aerospace Corp. Rep. No. TR-0158 (3133-02)-1, Air Force Report No. SAMSO-TR-68-66, July 1967.
15. Puri, N. N.; and Gido, J. F.: Nutational Stability Criteria for a Dual Spin Spacecraft–The Damper Reaction Torque and Quadratic Function Method. Presented at the 19th International Astronautical Congress (New York), October 1968.
16. Proceedings of National Symposium on Gravity Gradient Attitude Control of Satellites. Aerospace Corp., El Segundo, California, December 3-5, 1968.
17. Noll, R. B.; Deyst, J. J.; and Spenny, C. H.: A Survey of Structural Flexibility Effects on Spacecraft Control Systems. AIAA Paper No. 69-116, AIAA 7th Aerospace Sciences Meeting, New York, January 20-22, 1969.

18. Palmer, J. L.; Blackiston, H. S.; and Farrenkopf, R. L.: Advanced Techniques for Analyzing and Improving Gravity Gradient Satellite Pointing Accuracies at High Orbital Altitudes, Vol. I—Analyses. Technical Report AFFDL-TR-66-206, February 1967.

19. Fleming, A. W.; DeBra, D. B.; and da Silva, M. C.: Attitude-Translation Coupling in Drag-Free Satellites. Presented at 1970 IFAC Automatic Control in Space, Toulouse, France, March 2-6, 1970.

20. Lunar Orbiter Design Survey Team: Lunar Orbiter Program—Guidance and Control System Design Survey. The Boeing Company Document No. D2-114277-3, May 9, 1969.

21. Anon.: Apollo Guidance, Navigation, and Control; Guidance System Operations Plan for Manned CM Earth Orbital and Lunar Missions Using Program Colossus; Section 3—Digital Autopilot. MIT Instrumentation Laboratory R-577, April 1969.

22. Malik, P. W.; and Souris, G. A.: Gemini Final Summary Report. McDonnell Aircraft Corp. Report F169, February 20, 1967.

23. Surveyor Project Staff: Surveyor II Mission Report—Mission Description and Performance. Jet Propulsion Laboratory Technical Report 32-1086, April 1, 1967.

24. Anon.: Guidance System Operations Plan for Manned LM Earth Orbital and Lunar Missions Using Program Luminary; Section 3—Digital Autopilot. Apollo Guidance, Navigation, and Control, MIT Instrumentation Laboratory R-567, December 1968.

25. Cox, Kenneth J.: A Case Study on Apollo Lunar Module Digital Autopilot. 1969 IEEE Case Studies in System Control, Boulder, Colorado, August 4, 1969.

26. Vander Velde, W. E.: Space Vehicle Control Systems. Space Navigation Guidance and Control, AGARDograph 105, August 1966.

27. Swaim, Robert L.: A General Theory and Analysis of the Dynamic Stability of Flexible-Bodied Missiles. AF Flight Control Laboratory Technical Documentary Report No. ASD-TDR-62-627, October 1962.

28. Turk, Will: Ranger Block III Attitude-Control System. Jet Propulsion Laboratory Technical Report No. 32-663, November 15, 1964.

29. Anon.: Ranger VI Mission Description and Performance. Jet Propulsion Laboratory Technical Report No. 32-699, December 15, 1966.

30. Anon.: Flight Projects for the Period July 1 to August 31, 1967. Jet Propulsion Laboratory Space Programs Summary 37-47, Vol. 1, September 30, 1967.

31. Kelley, James H.: Mariner IV Midcourse Propulsion System Impulse and Accuracy Prediction. J. Spacecraft and Rockets, Vol. 4, No. 9, September 1967, pp. 1217-1223.

32. Gardner, Alfred J.: Launch and Target Vehicle Support by the Department of Defense. Gemini Summary Conference, NASA SP-138, February 1-2, 1967, pp. 167-184.

33. Kopf, E. H.: A Mariner Orbiter Autopilot Design. Jet Propulsion Laboratory Technical Report 32-1349, January 15, 1969.

34. Stubbs, G. S.; Penchuk, A.; and Schlundt, R. W.: A Digital Autopilot for Thrust Vector Control of the Apollo CSM and CSM/LM Vehicles. Presented at the AIAA Guidance, Control, and Flight Mechanics Conference held at Princeton, N.J., August 18-19, 1969.

35. Widnall, W. S.: The Minimum-Time Thrust-Vector Control Law in the Apollo Lunar-Module Autopilot. Presented at the 3rd IFAC Symposium Automatic Control in Space, Toulouse, France, March 2-6, 1970.

36. Woestemeyer, F. B.: General Considerations in the Selection of Attitude-Control Systems, SAE-NASA Aerospace Vehicle Flight Control Conference Proceedings, Los Angeles, California, July 13-15, 1965.

37. Anon.: Application of High Moment-Producing Techniques for Control of a Manned Space Vehicle. Air Force Technical Documentary Report No. FDL-TDR-64-32, March 1964.

38. Robinson, A. E.: Survey of Dynamic Analysis Methods for Flight Control Design. J. Aircraft, Vol. 6, No. 2, March-April 1969.

39. Greensite, A. L.: Analysis and Design of Space Vehicle Flight Control Systems, Vol. III. Linear Systems. NASA CR-822, July 1967.

40. Blakelock, J. H.: Automatic Control of Aircraft and Missiles. John Wiley and Sons, Inc., New York, 1965.

41. Truxal, J. G.: Automatic Feedback Control System Synthesis. McGraw-Hill Book Co., Inc., New York, 1955.

42. Savant, C. J.: Basic Feedback Control System Design. McGraw-Hill Book Co., Inc., New York, 1958.

43. Hoke, J. W.: Derivation of the Single-Plane Equations of Motion for the Apollo Vehicle Including the Effects of Propellant Sloshing and Structural Flexibility. North American Rockwell Corp., Space Division, SD-68-132, June 1968.

44. Tutt, G. E.; and Jansen, J. A.: Dynamics of the Apollo Electromechanical Actuator. J. Spacecraft and Rockets, Vol. 5, No. 5, May 1968, pp. 541-546.

45. Greensite, A. L.: Analysis and Design of Space Vehicle Flight Control Systems, Vol. IV. Nonlinear Systems. NASA CR-823, July 1967.

46. Gibson, J. E.: Nonlinear Automatic Control. McGraw-Hill Book Co., Inc., New York, 1963.

47. Edelmann, R.; and Dunn, P.: Dynamic Analysis of the LEM Flight Control System. Grumman Aircraft Engineering Corporation, Report No. LED-500-3, September 1964.

48. Freeman, G.; Leonnard, G.; and Nagata, H.: Burner II Flight Control System Analysis. The Boeing Company Document No. D2-82688-1, March 1966.

49. Clausen, J. T., Jr.: The Role of Simulation in the Development of Gemini Guidance and Control. AIAA Second Manned Space Flight Meeting, 1963, pp. 126-133.

50. SCS Design Survey Team: Apollo Command and Service Module Stabilization and Control System Design Survey. North American Rockwell Corp., SD 68-869, December 20, 1968.

51. Widnall, W. S.; et al.: The Digital Simulation for the Verification of Program Sunburst (Unmanned LM, AS-206). MIT Instrumentation Laboratory E-2146, July 1967.

52. Schlundt, R. W.: Colossus 2—TVC DAP Simulation Results. MIT Instrumentation Laboratory E-2409, April 1969.

53. Ribarich, J. J.: Mars Spinning Support Module Study; Volume II—Analysis. NASA CR-66732-II, January 31, 1969.

54. Anon.: Surveyor Final Engineering Report, Vol. III—Tests. Hughes Aircraft Company, SSD 78175-2, 1968.

55. Paghis, I.; Franklin, C. A.; and Mar, J.: Alouette I, The First Three Years in Orbit. Defense Research Telecommunications Establishment, DRTE Rept. No. 1159, Part 3, March 1967.

56. Lawrence, W. H.; et al.: Techniques for Determining Center of Mass of a Space Vehicle. Air Force ASD-TDR-62-514, May 1963.

57. Hough, W. W.; and Schmuecker, J. D.: Mariner-Mars Inertial Properties Determination and Mid-course Motor Alignment. Jet Propulsion Laboratory Technical Report No. 32-852, May 15, 1968.

58. Gayman, W. H.; Trubert, Marc R.; and Abbott, P. W.: Measurement of Structural Transfer Functions Significant to Flight Stability of the Surveyor Spacecraft. Jet Propulsion Laboratory Technical Memorandum 33-389, May 1, 1969.

59. Lukens, David R.: Dynamic Stability of Space Vehicles, Vol. IV—Full Scale Testing for Flight Control Parameters. NASA CR-938, November 1967.

60. Dotts, Homer, W.; et al.: Operational Characteristics of the Docked Configuration. Gemini Summary Conference, NASA SP-138, February 1-2, 1967.

61. Warner, G. G.; and Snyder, V. W.: A Re-evaluation of Jet Damping. J. Spacecraft and Rockets, Vol. 5, No. 3, March 1968, pp. 364-366.

62. Katz, P.; et al.: Technical Comments, J. Spacecraft and Rockets, Vol. 5, No. 10, October 1968, pp. 1246-1247.

63. Fischell, R. E.: Magnetic and Gravity Attitude Stabilization of Earth Satellites. The Johns Hopkins University, CM-996, May 1961.

64. Effects of Structural Flexibility on Launch Vehicle Control Systems. NASA Space Vehicle Design Criteria Monograph (Guidance and Control), NASA SP-8036, February 1970.

NASA SPACE VEHICLE DESIGN CRITERIA MONOGRAPHS ISSUED TO DATE

SP-8001 (Structures)	Buffeting During Atmospheric Ascent, revised November 1970
SP-8002 (Structures)	Flight-Loads Measurements During Launch and Exit, December 1964
SP-8003 (Structures)	Flutter, Buzz, and Divergence, July 1964
SP-8004 (Structures)	Panel Flutter, May 1965
SP-8005 (Environment)	Solar Electromagnetic Radiation, June 1965
SP-8006 (Structures)	Local Steady Aerodynamic Loads During Launch and Exit, May 1965
SP-8007 (Structures)	Buckling of Thin-Walled Circular Cylinders, revised August 1968
SP-8008 (Structures)	Prelaunch Ground Wind Loads, November 1965
SP-8009 (Structures)	Propellant Slosh Loads, August 1968
SP-8010 (Environment)	Models of Mars Atmosphere (1967), May 1968
SP-8011 (Environment)	Models of Venus Atmosphere (1968), December 1968
SP-8012 (Structures)	Natural Vibration Modal Analysis, September 1968
SP-8013 (Environment)	Meteoroid Environment Model—1969 (Near Earth to Lunar Surface), March 1969
SP-8014 (Structures)	Entry Thermal Protection, August 1968
SP-8015 (Guidance and Control)	Guidance and Navigation for Entry Vehicles, November 1968
SP-8016 (Guidance and Control)	Effects of Structural Flexibility on Spacecraft Control Systems, April 1969
SP-8017 (Environment)	Magnetic Fields—Earth and Extraterrestrial, March 1969
SP-8018 (Guidance and Control)	Spacecraft Magnetic Torques, March 1969
SP-8019 (Structures)	Buckling of Thin-Walled Truncated Cones, September 1968
SP-8020 (Environment)	Mars Surface Models (1968), May 1969
SP-8021 (Environment)	Models of Earth's Atmosphere (120 to 1000 km), May 1969
SP-8023 (Environment)	Lunar Surface Models, May 1969
SP-8024 (Guidance and Control)	Spacecraft Gravitational Torques, May 1969
SP-8025 (Chemical Propulsion)	Solid Rocket Motor Metal Cases, April 1970

SP-8026 (Guidance and Control)	Spacecraft Star Trackers, July 1970
SP-8027 (Guidance and Control)	Spacecraft Radiation Torques, October 1969
SP-8028 (Guidance and Control)	Entry Vehicle Control, November 1969
SP-8029 (Structures)	Aerodynamic and Rocket-Exhaust Heating During Launch and Ascent, May 1969
SP-8031 (Structures)	Slosh Suppression, May 1969
SP-8032 (Structures)	Buckling of Thin-Walled Doubly Curved Shells, August 1969
SP-8033 (Guidance and Control)	Spacecraft Earth Horizon Sensors, December 1969
SP-8034 (Guidance and Control)	Spacecraft Mass Expulsion Torques, December 1969
SP-8035 (Structures)	Wind Loads During Ascent, June 1970
SP-8036 (Guidance and Control)	Effects of Structural Flexibility on Launch Vehicle Control Systems, February 1970
SP-8037 (Environment)	Assessment and Control of Spacecraft Magnetic Fields, September 1970
SP-8040 (Structures)	Fracture Control of Metallic Pressure Vessels, May 1970
SP-8046 (Structures)	Landing Impact Attenuation for Nonsurface-Planning Landers, April 1970
SP-8047 (Guidance and Control)	Spacecraft Sun Sensors, June 1970

NASA-Langley, 1971 —— 21