NASA
SPACE VEHICLE
DESIGN CRITERIA
(GUIDANCE AND CONTROL)

NASA SP-8071

PASSIVE GRAVITY-GRADIENT LIBRATION DAMPERS

FEBRUARY 1971

NATIONAL AERONAUTICS AND SPACE ADMINISTRATION

GUIDE TO THE USE OF THIS MONOGRAPH

The purpose of this monograph is to organize and present, for effective use in spacecraft development, the significant experience and knowledge accumulated in development and operational programs to date. It reviews and assesses current design practices, and from them establishes firm guidance for achieving greater consistency in design, increased reliability in the end product, and greater efficiency in the design effort. The monograph is organized into three major sections that are preceded by a brief *Introduction* and complemented by a set of *References.*

The *State of the Art,* section 2, reviews and discusses the total design problem, and identifies *which* design elements are involved in successful designs. It describes succinctly the current technology pertaining to these elements. When detailed information is required, the best available references are cited. This section serves as a survey of the subject that provides background material and prepares a proper technological base for the *Design Criteria* and *Recommended Practices.*

The *Design Criteria,* shown in section 3, state clearly and briefly what rule, guide, limitation, or standard must be imposed on each essential design element to insure successful design. The *Design Criteria* can serve effectively as a checklist for the project manager to use in guiding a design or in assessing its adequacy.

The *Recommended Practices,* as shown in section 4, state how to satisfy each of the criteria. Whenever possible, the best procedure is described; when this cannot be done concisely, appropriate references are provided. The *Recommended Practices,* in conjunction with the *Design Criteria,* provide positive guidance to the practicing designer on how to achieve successful design.

Both sections have been organized into decimally numbered subsections so that the subjects within similarly numbered subsections correspond from section to section. The format for the Contents displays this continuity of subject in such a way that a particular aspect of design can be followed through both sections as a discrete subject.

The design criteria monograph is not intended to be a design handbook, a set of specifications, or a design manual. It is a summary and a systematic ordering of the large and loosely organized body of existing successful design techniques and practices. Its value and its merit should be judged on how effectively it makes that material available to and useful to the user.

FOREWORD

NASA experience has indicated a need for uniform criteria for the design of space vehicles. Accordingly, criteria are being developed in the following areas of technology:

Environment

Structures

Guidance and Control

Chemical Propulsion

Individual components of this work will be issued as separate monographs as soon as they are completed. This document, *Passive Gravity-Gradient Libration Dampers,* is one such monograph.

A list of all previously issued monographs can be found in the back of this publication.

These monographs serve as guides to NASA design and mission planning. They are used to develop requirements for specific projects and also are cited as the applicable references in mission studies and in contracts for design and development of space vehicle systems.

This monograph was prepared under the cognizance of NASA and published by JPL. Principal contributor was Dr. George G. Herzl, assisted by William W. Walker, both of Lockheed Missiles and Space Company. Contributions were also made by John D. Ferrera of JPL. The effort was guided by an advisory panel of the following individuals:

G. F. Banks	NASA Goddard Space Flight Center
R. T. Beal	Naval Research Laboratory
R. F. Bohling	NASA Office of Advanced Research and Technology
F. J. Carroll	NASA Electronics Research Center
J. C. McSherry	USAF Office of Aerospace Research
F. F. Mobley	Johns Hopkins University Applied Physics Laboratory
J. P. O'Neill	TRW Systems, Inc.
G. S. Reiter	Hughes Aircraft Company
C. H. Spenny	NASA Electronics Research Center
B. E. Tinling	NASA Ames Research Center
W. C. Triplett	Philco-Ford Corporation
E. H. Wrench	General Dynamics Corporation

Comments concerning the technical content of this monograph will be welcomed by the National Aeronautics and Space Administration, Office of Advanced Research and Technology (Code RE), Washington, D.C. 20546.

February 1971

CONTENTS

1. INTRODUCTION 1

2. STATE OF THE ART 1

2.1 Design Experience 2
2.1.1 Types of GGL Dampers 2
2.1.2 Damper Design Configurations 4

2.2 Flight Experience 14
2.2.1 Typical Parameters for GGL Damper Design 14
2.2.2 Flight Problems 25

3. DESIGN CRITERIA 28

3.1 Damper Design 28
3.1.1 Input Design Constraints 28
3.1.2 Selection of Design Principles 29
3.1.3 Design Analysis 30
3.1.4 Mechanisms Design 30

3.2 Thermal Design 30

3.3 Magnetic Design 31

3.4 Radiation Protection 31

3.5 Space Vacuum 31

3.6 Weightlessness 31

3.7 Spacecraft Integration 31

3.8 Launch Environment 32

3.9 Performance Verification 32

4. RECOMMENDED PRACTICES 32

4.1 Damper Design 32

4.2 Thermal Design 33
4.2.1 Analysis 34
4.2.2 Damping Element 34
4.2.3 Suspension 35
4.2.4 Thermal Control 36

4.3 Magnetic Design 36
4.3.1 Magnetic Degradation of Damper Components 36
4.3.2 Unbalanced Magnetic Dipoles 37
4.3.3 Magnetic Deadband in Magnetic Hysteresis Dampers 39
4.3.4 Magnetic Contamination 39

4.4 Radiation Protection 39

4.5 Space Vacuum 40

4.6 Weightlessness 40

PASSIVE GRAVITY-GRADIENT LIBRATION DAMPERS

1. INTRODUCTION

Gravity-gradient libration (GGL) dampers dissipate the energy of librations, i.e., oscillations about the stable equilibrium orientation of gravity-gradient (GG) stabilized spacecraft. The earth's magnetic field and the weightlessness, thermal environment, and vacuum of space significantly affect the design of GGL dampers, since they are used in spacecraft that rely on the very weak GG torques for stabilization. The damper must be sufficiently sensitive to react to very small torques but must also be rugged enough to withstand the severe forces experienced during launch and orbital maneuvers.

Malfunctioning of GGL dampers may cause gross departures from the desired spacecraft orientation, while inefficient damping may cause long spacecraft-attitude settling times. Either of these problems degrades the performance of earth-oriented experiments, observation equipment, and communications systems on GG-stabilized spacecraft.

GGL dampers should be designed to have a high damping-to-weight ratio and a suspension with negligible Coulomb friction. The design should minimize the susceptibility of the damper to magnetic contamination, to null-position shifts, to long term exposure in the space environment, and to damage during prelaunch, launch, and orbital operations.

This monograph is applicable to the design of passive GGL dampers, i.e., those that do not have active electromechanical components. Related monographs are: Tubular-Spacecraft Booms, Environmental Criteria, Spacecraft Disturbance Torques, and Effects of Structural Flexibility on Spacecraft Control Systems.

2. STATE OF THE ART

The TRANSIT-5A satellite, which was the first man-made object to achieve GG stabilization, used a GGL damper consisting of a large cadmium-coated helical spring that dissipated energy through structural hysteresis losses. Since then a great deal of flight experience has been acquired and a variety of GGL damper configurations have been developed using diverse design principles for each damper element. Reference 1 provides a more numerous list than is included in this monograph, of GG-stabilized spacecraft which have been flown, along with their principal characteristics and detailed descriptions of their GGL dampers. The various dampers which will be discussed in this monograph have been selected from the listing in reference 1 in such a way as to include at least one example of each damper configuration which has been implemented and of each failure type which has been encountered.

2.1 Design Experience

2.1.1 Types of GGL Dampers

Libration damping is accomplished by dissipating energy of relative motion between spacecraft and either (1) the external geomagnetic field (single-part dampers) or (2) the spacecraft components that are coupled (also referred to as "anchored") to an external reference field (two-part dampers). Table 1 lists these two generic types of GGL dampers, the applicable reference fields, the design principles for each of the four main damper elements and the applicable satellite and design configuration. The horizontal lines indicate the particular combinations which have been implemented.

(1) Single-Part Dampers

The simplest GGL damper design approach that is extensively used consists of several rods rigidly attached to the spacecraft. This damper does not have a suspension element since the damper components do not move with respect to each other. The damper rod dissipates energy by magnetic hysteresis losses induced by the relative motion of the rod with respect to the earth's magnetic field. The libration energy is dissipated through rotation of elementary magnetic domains in the damping material of which the rod is manufactured. This type of damper is efficient only in low-altitude orbits and has provided relatively low pointing accuracy – typically on the order of 0.17 to 0.34 rad. Several means have been devised to enhance the damping of these rods by amplifying the effect of the earth's magnetic field. Enhanced hysteresis damping rods have been used successfully in synchronous orbits to achieve the same pointing accuracy as achieved with simple damper rods at low altitude.

One variety of single part dampers dissipates the energy of eddy currents induced in the rod moving in the earth's magnetic field. This damper was used on only one spacecraft, and it is not anticipated that it will be used in the future due to its high weight requirement.

(2) Two-Part Dampers

These dampers consist of (a) components that are attached to the main spacecraft structure, and (b) components that are coupled to an external reference field. The geomagnetic and the earth's gravitational fields have been used for this purpose to date. Many conceptual designs were based on aerodynamic and solar pressure reference fields, but have not been implemented. However, aerodynamic pressure was used to assist GG stabilization of several Orbiting Vehicle (OV1) series satellites.

Most geomagnetic anchoring has been implemented to date in the form of a spherical damper configuration (also called a ball damper). This configuration consists of a sphere that is diamagnetically suspended within another sphere. The inner sphere contains a bar magnet that aligns itself with the earth's geomagnetic field, while the outer sphere is rigidly attached to the spacecraft. The relative motion between the spheres caused by spacecraft librations is damped by either the viscous or the eddy current damping principle. The pointing accuracies that have been achieved with the spherical damper systems are on the order of 0.09 to 0.17 rad.

TABLE 1.–Representative GGL Dampers and Design Configurations (all lines indicate the combinations of design principles for dampers that have been flown)

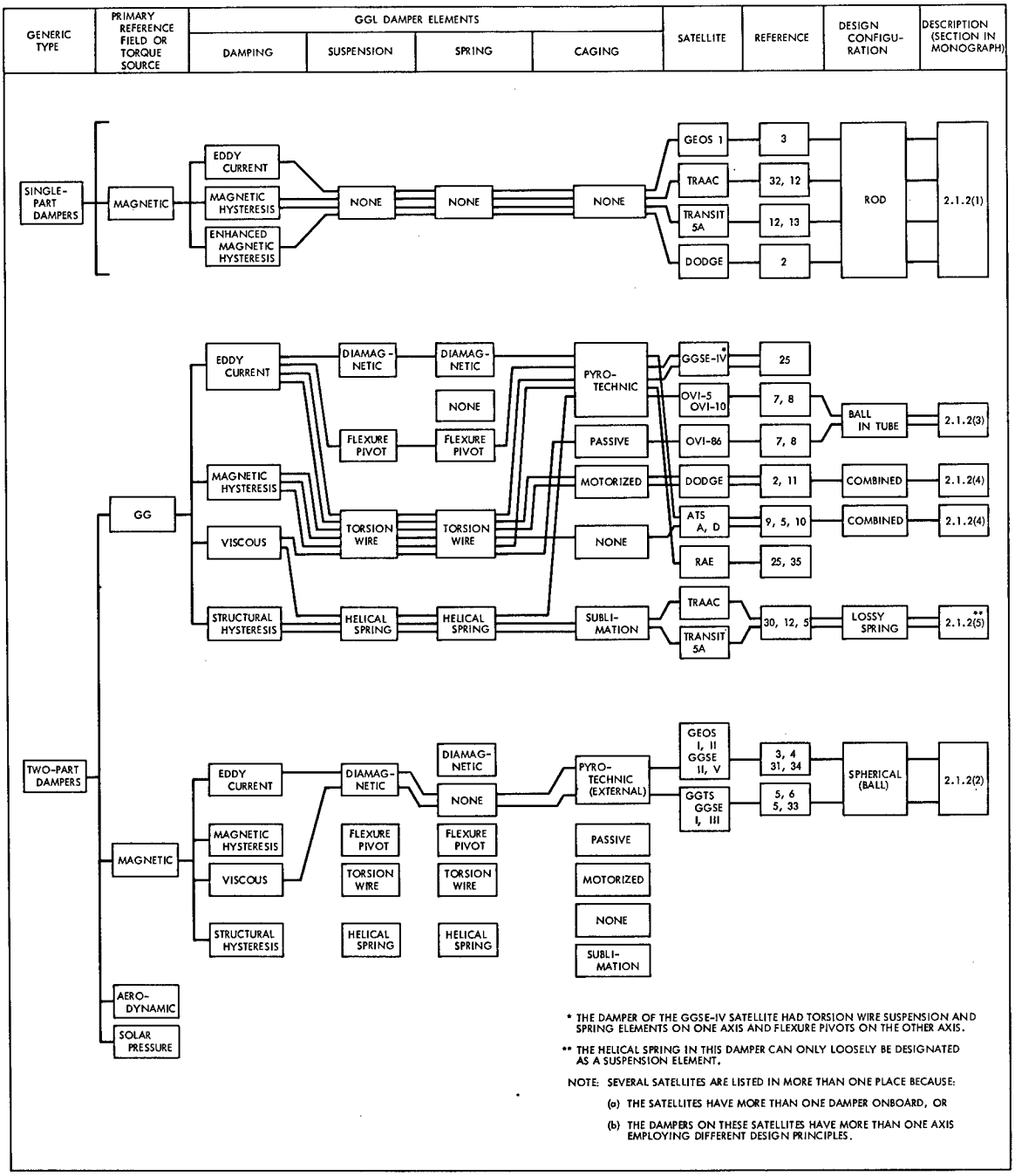

* THE DAMPER OF THE GGSE-IV SATELLITE HAD TORSION WIRE SUSPENSION AND SPRING ELEMENTS ON ONE AXIS AND FLEXURE PIVOTS ON THE OTHER AXIS.

** THE HELICAL SPRING IN THIS DAMPER CAN ONLY LOOSELY BE DESIGNATED AS A SUSPENSION ELEMENT.

NOTE: SEVERAL SATELLITES ARE LISTED IN MORE THAN ONE PLACE BECAUSE:

(a) THE SATELLITES HAVE MORE THAN ONE DAMPER ONBOARD, OR

(b) THE DAMPERS ON THESE SATELLITES HAVE MORE THAN ONE AXIS EMPLOYING DIFFERENT DESIGN PRINCIPLES.

The greatest diversity of design exists in two-part dampers which are coupled to the earth's gravitational field. One part of this type of damper is attached to a primary boom, while the other part is attached to the damper boom. This procedure, however, complicates the design of the damper suspension and of the protection from launch vibrations. Torsion wire, coil spring, flexure pivot, and diamagnetic suspensions have been used in conjunction with many damping principles and methods of caging for this type of damper. Pointing accuracies of 0.034 rad have been achieved with this type of damper system.

2.1.2 Damper Design Configurations

Since it is easier to describe representative GGL dampers by their specific configuration rather than by the damping principles used, this section is organized by configuration with subheadings of damping principles. This section is related to table 1 by comparing column nine to column three in that table.

(1) Rod Dampers

Rod dampers (see definition, sect. 2.1.1(1)) are inherently reliable due to their simplicity, and are extensively used even though they do not provide pointing accuracies and initial damping times comparable to those attained with two-part dampers. Rod dampers have been used on GG satellites both alone and with other GGL dampers. Similar dampers are also used on magnetically stabilized satellites. Enhanced single-part dampers have been used on satellites in high-altitude orbits where the simple rods are not effective.

- *Hysteresis Rod Dampers.* The hysteresis rod damper typically consists of two or four slender rods, made of a highly permeable material. The earlier spacecraft, including Transit Research and Attitude Control (TRAAC), TRANSIT-5A, and 1964-63A, used four 147.3-cm-long rods. Later spacecraft, such as 1965-109A, 1967-92A, and 1968-12A, used two 121.9-cm rods. The rods are attached either to the spacecraft structure or to the solar panels. The magnetic material, AEM 4750, has been used in all hysteresis rod dampers to date since it produces high hysteresis losses and is unaffected by exposure to space environment over long periods of time. The high level of permeability of the hysteresis rods is achieved by heat treatment in dry hydrogen.

- *Eddy Current Rod Dampers.* The damping torque of eddy current rod dampers is proportional to the libration rate. Its performance is highly dependent on altitude since the damping coefficient is proportional to the square of the external magnetic field which falls off with the cube of the orbital radius. Relatively long and heavy rods are required at the low GG libration rates since this damper is less efficient than the magnetic hysteresis rod damper. The eddy current rod damping concept was applied to the Geodetic Earth Orbiting Satellite (GEOS-1) in which three sets of parallel rods, each 73.7 cm long, were used to produce a damping rate of 3×10^{-2} N-cm-sec/rad at the 1111-km altitude. The rods consisted of 4-79 moly-permalloy cores sheathed in copper.

- *Enhanced Single-Part Dampers (semi-passive).* The rod dampers described above are effective only in low-altitude orbits, since they rely on the earth's magnetic field to induce energy losses in the rods. The use of single-part dampers has been extended to higher altitudes by using electrical energy to enhance the earth's magnetic field. Two schemes of this type have been developed: (a) artificial hysteresis damping as used on the Radio Astronomy Explorer (RAE) and Department of Defense Gravity Experiment (DODGE) satellites and (b) the so-called sample-and-hold method, which was also used on the DODGE satellite. Figure 1 shows a schematic and reference 2 gives details of these two damping systems.

  (a) *Artificial Hysteresis Damper.* This damper consists of a three-axis vector magnetometer, a three-channel "hysteresis generator," three power amplifiers, and three orthogonal magnetic dipole generators. The magnetometer senses the earth's magnetic field and produces proportional outputs. The hysteresis generators convert these signals into hysteretic outputs by using toroids of ferromagnetic material with Hall effect detectors to measure the flux density in the toroids. These outputs are amplified to generate two alternate magnetic dipole levels which are displaced from the measured earth's magnetic field by an angle associated with the hysteresis effect. The high magnetic dipole level is for initial damping after GG capture, while the low level is for the steady state operation to reduce the perturbing magnetic torques that affect the steady state pointing accuracy of the satellite.

  (b) *Sample and Hold Damper.* This damper uses the same components as the artificial hysteresis damper except for the sampling components which are used instead of the hysteresis generator. In this damper the magnetometer outputs are "sampled" at certain timed intervals, and proportional output voltages are produced and "held" for 3 to 6 hr between samples. Sampling is done on all three magnetometer outputs simultaneously. The resulting magnetic dipole is parallel to the external field at the instant of sampling, at which time no torque is produced. As the satellite librates, the dipole, which is "held," rotates away from the external field and a torque is produced to oppose the motion. More complex schemes have also been devised using additional memory elements to achieve greater damping efficiency but they have not yet been flown.

(2) Spherical Dampers

Spherical dampers are magnetically coupled to the earth's magnetic field and dissipate the libration energy of the GG spacecraft by either viscous fluid or eddy-current damping (see also sect. 2.1.1(2)). Details in addition to those below are given in references 3, 4, 5, and 6.

- *Viscous-Fluid Spherical Damper.* Dampers flown on the Gravity Gradient Test Satellite (GGTS) spacecraft consist of two concentric spheres with a damping fluid contained between the spheres as shown in figure 2. A cylindrical magnet couples the inner sphere to the earth's magnetic field while the outer sphere is attached to the boom which librates with the spacecraft. The relative motion between the spheres

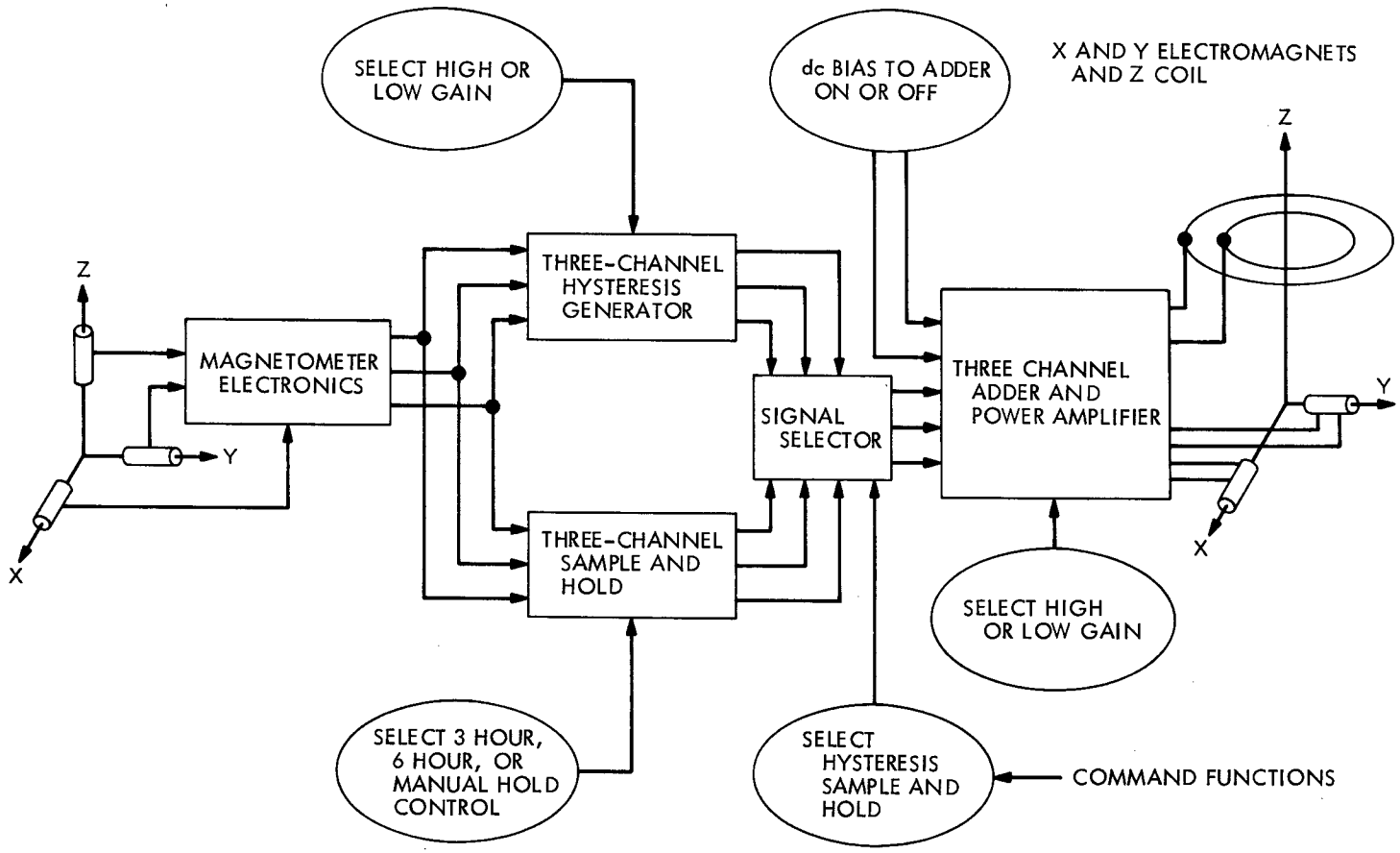

Figure 1.–Enhanced single-part dampers of the DODGE satellite (from ref. 2)

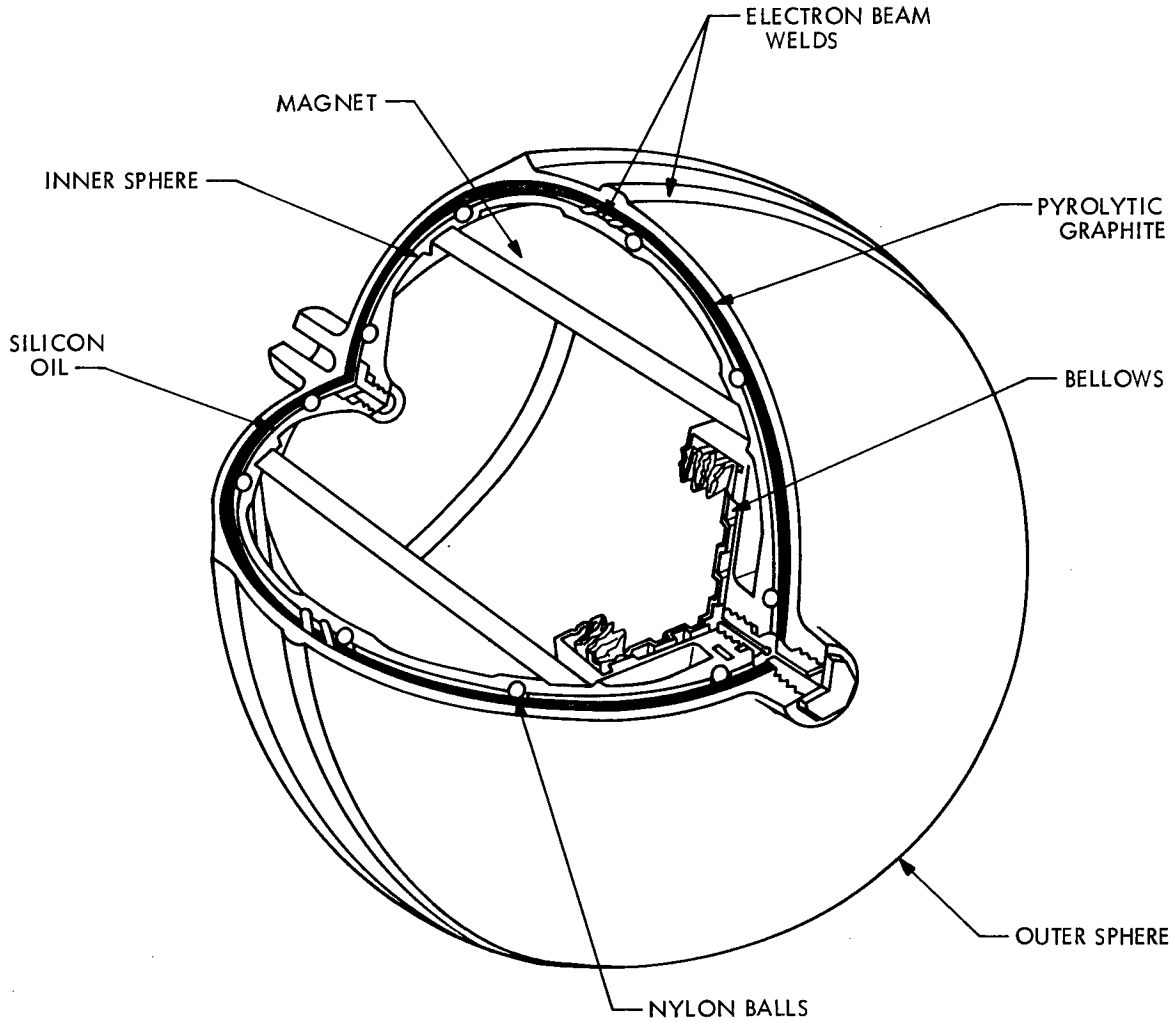

Figure 2.–Schematic of viscous fluid spherical damper (based on photograph from General Electric Company)

is damped by the viscous shearing action of the fluid. The cylindrical magnet within the inner sphere provides the suspension forces by interacting with the pyrolytic graphite (a diamagnetic material) liner in the outer sphere. Nylon balls, between the spheres, assure even spacing when inertial forces acting exceed the weak diamagnetic suspension forces.

- *Eddy-Current Spherical Damper.* The eddy current spherical damper, shown schematically in figure 3, employs a copper shell instead of viscous fluid to dissipate energy. The magnet configuration most commonly flown, such as on the Gravity Gradient Stabilization Experiment (GGSE-II) and the GEOS-I and II spacecraft, consists of six bar magnets joined at the center. This magnet assembly provides magnetic coupling, diamagnetic suspension, and generates eddy currents for damping.

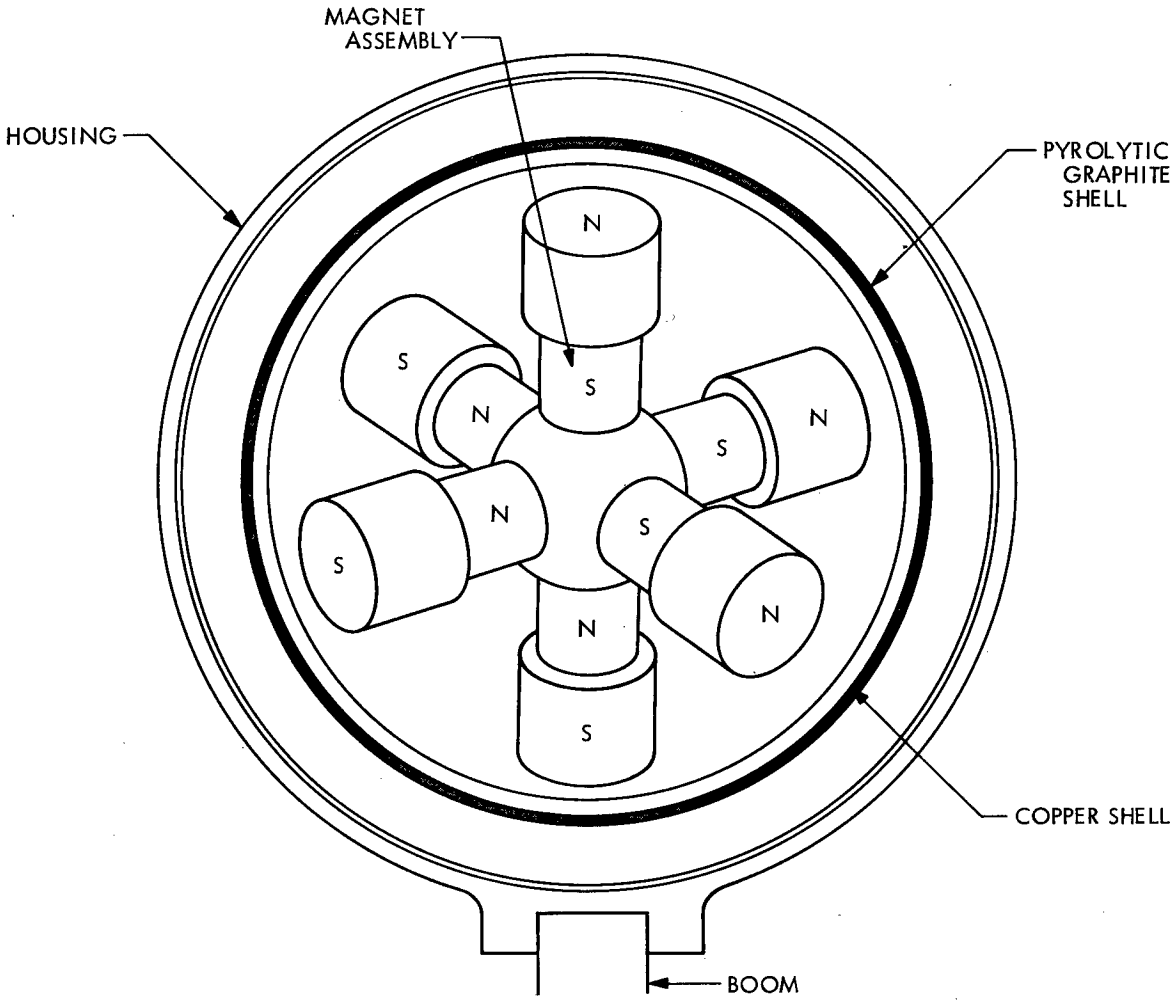

Figure 3.–Schematic of eddy current spherical damper; housing details are similar to those for the viscous spherical damper shown in figure 2 (based on photograph from General Electric Company)

(3) Ball-in-Tube Dampers

A single-axis ball-in-tube viscous-fluid GGL damper was used on the OV1-5 and OV1-10 spacecraft and a two-axis damper on the OV1-86 spacecraft. Details in addition to those below are given in references 7 and 8.

- *OV1-5 and OV1-10 Dampers.* Each of the dampers flown on these two spacecraft consists of a steel ball inserted in an aluminum tube containing a viscous fluid, and a C-magnet to hold the ball fixed relative to the spacecraft as shown in figure 4. The tube is GG anchored by means of two damper booms, while the magnet is rigidly attached to the spacecraft. Damping is achieved by viscous action of the damping fluid as it is forced from one side of the ball to the other by the motion of the librating spacecraft. Coil springs provide the suspension and restoring torque for the secondary

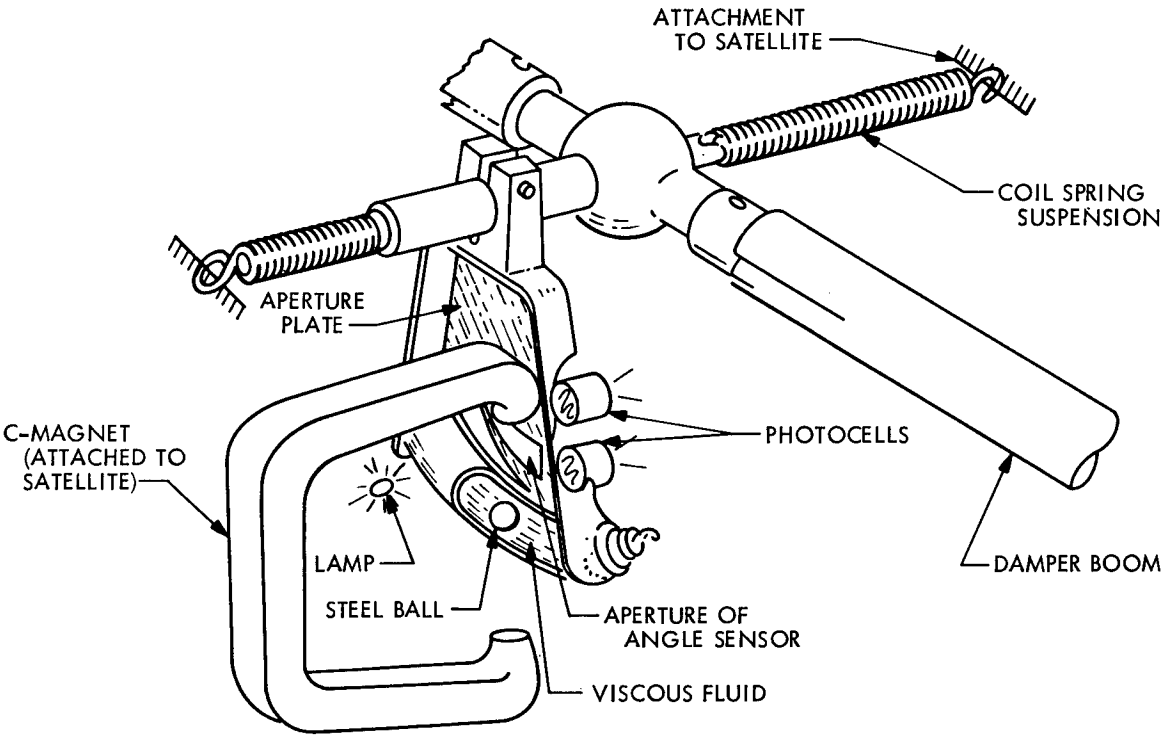

Figure 4.–Single-axis, ball-in-tube damper flown on the OV1-5 and -10 spacecraft (based on schematic from General Dynamics Corporation)

part of the damper. The damper is caged by holding the secondary part in a supporting saddle by elastically stretching the coil springs, which return to their equilibrium positions when the damper is uncaged. The lamp and photocells are used to read out the relative position of the two parts of this damper (see also sect. 4.9.3).

- *OV1-86 Damper.* The two-axis damper on the OV1-86 spacecraft uses the same type of damping element as the single-axis damper on the OV1-5 and OV1-10 spacecraft. This damper has a torsion wire suspension for each axis instead of the coil spring used for the single-axis damper. The damper magnet assemblies for both axes are mounted on the intermediate suspension member. The damper is located in the center of the storage reel that holds the tape for the three damper booms. The damper is passively caged; i.e., the caging system is operated by automatic sequencing which is triggered by a signal for extension of the boom.

(4) Combined Magnetic Hysteresis and Eddy Current Dampers

The Application Technology Satellite (ATS) series and the DODGE experimental satellite series, respectively, have on board a two-part magnetic hysteresis damper and a two-part eddy current damper. These two dampers are described under this separate heading as "combined" units since for each satellite they have a number of common components. Details, in addition to those below, can be found in references 9 and 10 for the ATS spacecraft and references 2 and 11 for the DODGE spacecraft.

- *The ATS Combination Damper.* The ATS-A and ATS-D damping systems provide two damping modes which can be selected while the spacecraft is in orbit upon command from earth. Switching between damping modes is accomplished by means of an electromechanical clutch that engages either (a) the torsion wire suspended hysteresis damper, or (b) the diamagnetically suspended eddy current damper. The configuration of the two coaxially positioned dampers that comprise the ATS damping system is shown in figure 5.

  (a) *Magnetic Hysteresis Damper.* The magnetic hysteresis damper is shown at the top of figure 5. The suspension consists of two torsion wires attached to each side of the damper vane shaft. The torsion wire provides the damper restoring torque and resists the magnetic attraction of the damper vane to the magnets. The suspension is sufficiently resilient so that caging of the secondary part of the damper is not required during launch and acquisition maneuvers in space during which

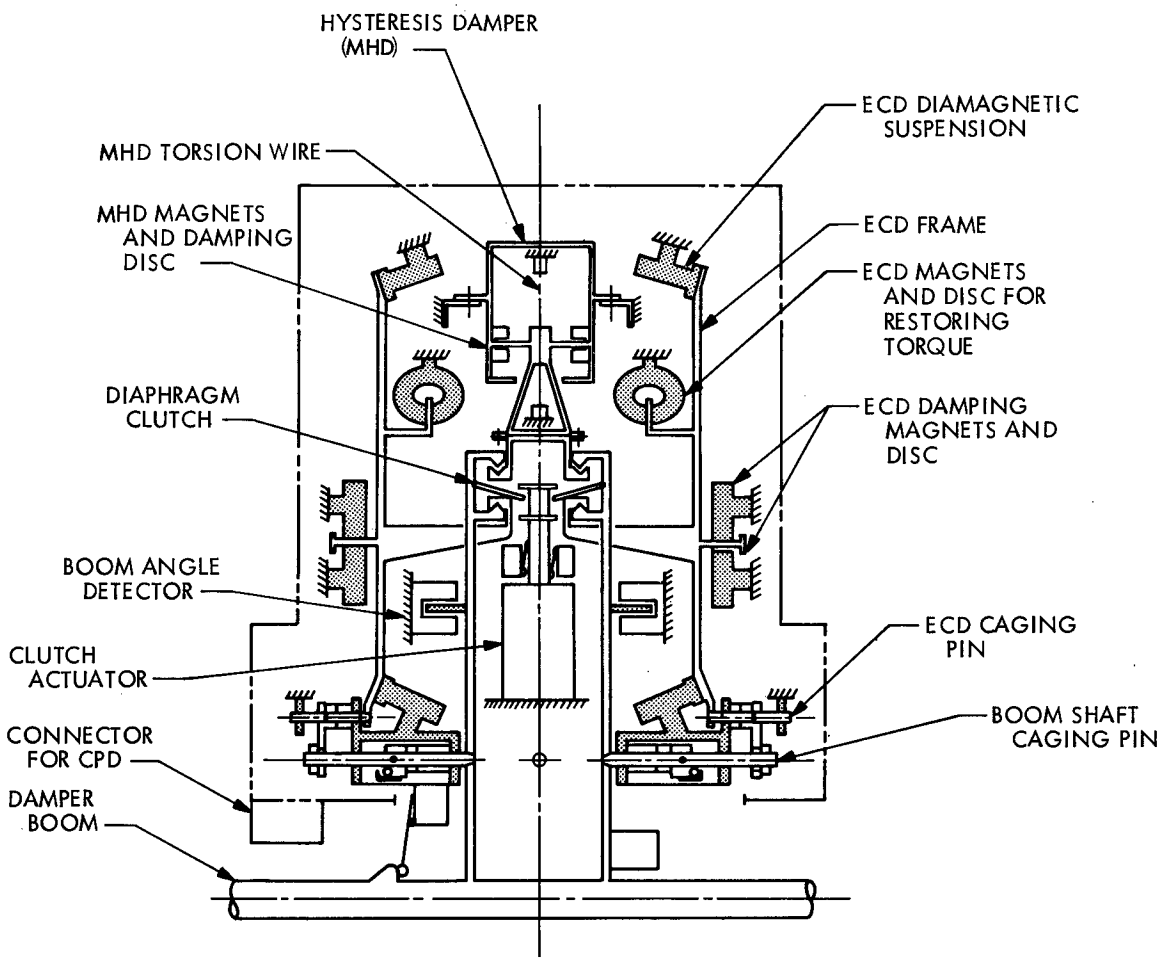

Figure 5.—Combination magnetic hysteresis damper (MHD) and eddy current damper (ECD) for Applications Technology Satellite (ATS) (from ref. 9)

time the damper vane shaft can be forced against both lateral and angular limit stops.

The damping element consists of a magnet assembly, a disc of magnetic material and torsion wire suspension, as shown in figure 6. The damper disc, or vane, moves in the magnetic field of permanent magnets when the spacecraft librates. The insert in the figures shows a detailed cross section of the magnetic circuit consisting of permanent magnets 2a and 2b, shaped pole pieces 1a, 1b, and 1c, and the damper vane. The direction of the elementary magnetic particles, or magnetic domains, changes when the vane moves with respect to the imposed local magnetic field. The change in the direction of the magnetization results in dissipation of energy which is proportional to the area of the hysteresis loop.

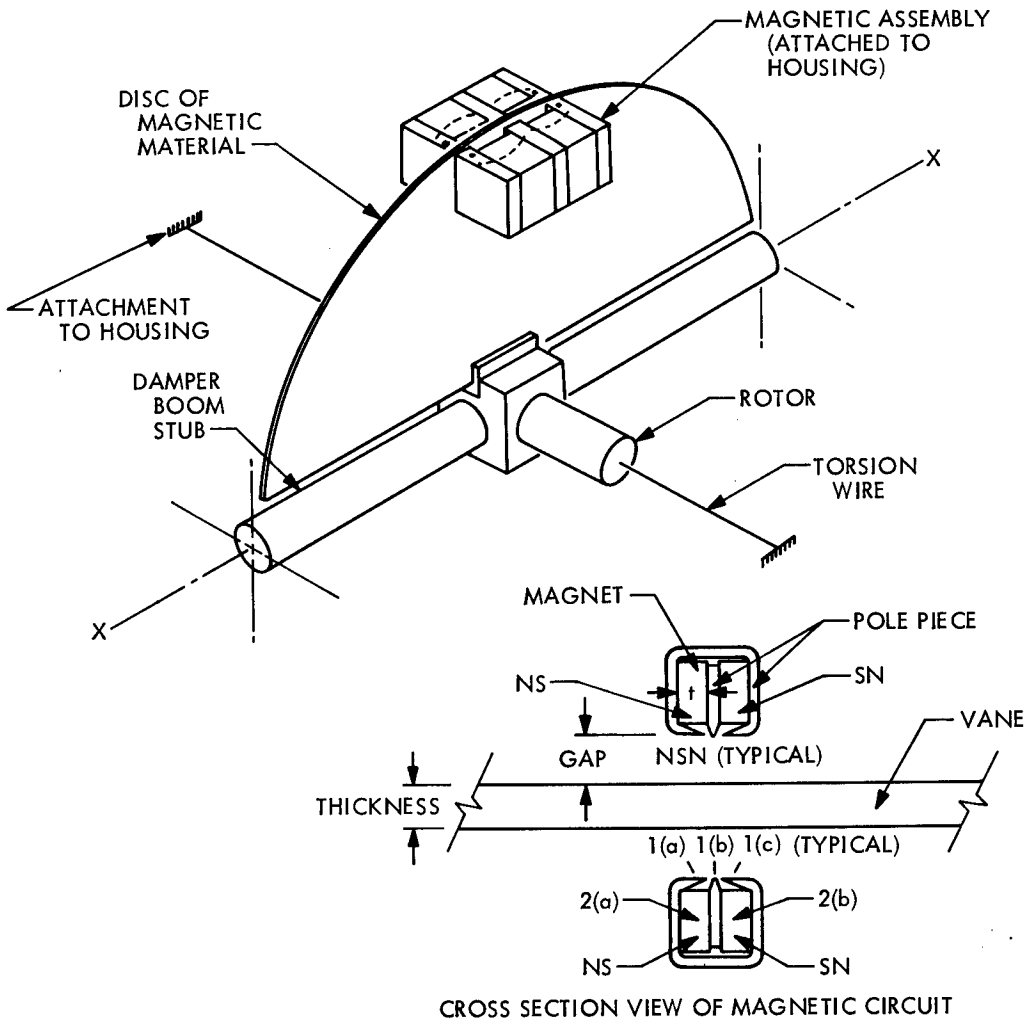

Figure 6.–Schematic of magnetic hysteresis GGL damper of ATS spacecraft (from ref. 10)

(b) *Eddy Current Damper.* The eddy current damper for the ATS spacecraft consists of a diamagnetically suspended aluminum disc that moves in the field of the damping magnets. Libration energy is dissipated by eddy currents generated in the damper vane. Diamagnetic suspension is provided by a set of magnets which repel a corresponding set of parts, made of pyrolytic graphite, which are attached to the damper vane. The suspension provides no restoring torque and has no preferred angular orientation. The restoring torque is provided by a second set of magnets that interact with the shaped magnetic material on the damper vane. The magnetic material was selected to have low hysteresis losses. Caging of the damper is accomplished by using four spring-loaded pins that are restrained by a cable.

- *The DODGE Combination Damper.* The DODGE spacecraft has several GGL dampers including a hysteresis and eddy current damper which use a common suspension. The details of the combined damper design are shown in figure 7 (see also refs. 2, 11). Two additional GGL dampers, which were also onboard this complex experimental spacecraft, are discussed in section 2.1.2(1).

  (a) *Hysteresis damper.* Selection of either the hysteresis or eddy current damping modes is made by electromagnetic means upon command from the earth. The damping element consists of an electric coil surrounding a strip of high hysteresis-losses magnetic material. The damper is activated by maintaining electrical current in the coil. The relative motion of the magnetic material with respect to the electric coil produces damping through hysteresis losses. The magnetic field level can be set to any value between zero and magnetic saturation.

  (b) *Eddy-current damper.* The eddy current damper is activated by magnetizing a chargeable horseshoe magnet to any value between zero and full magnetization. This is done by discharging a condenser through an electrical winding about the magnet. A Hall-effect detector determines the flux level of the magnetic field and is calibrated as an indicator of the eddy current damping rate. The damping element consists of a damper vane which is attached to the damper booms and a chargeable horseshoe magnet attached to the spacecraft. The motion of the copper vane in the gap of the magnet is damped through eddy currents induced in the vane.

(5) Lossy-Spring Damper

A lossy-spring damper (refs. 12 and 13) was used on TRANSIT-5A, which in 1963 was the first artificial satellite to achieve GG stabilization. It achieved a pointing accuracy of 0.17 rad. This damper is primarily of historical significance, but much has been learned from the experience with this damper that can be applied to the design of future spacecraft mechanisms.

The lossy-spring damper, shown in figure 8, consists of a helical spring with 80 turns of 0.2-mm-diameter beryllium copper wire, a flashing light unit, and a housing. Libration damping is provided by mechanical hysteresis losses in a 0.02-mm layer of cadmium when the spring expands and contracts due to the libration of the spacecraft. The spring is also plated with a 0.005-mm

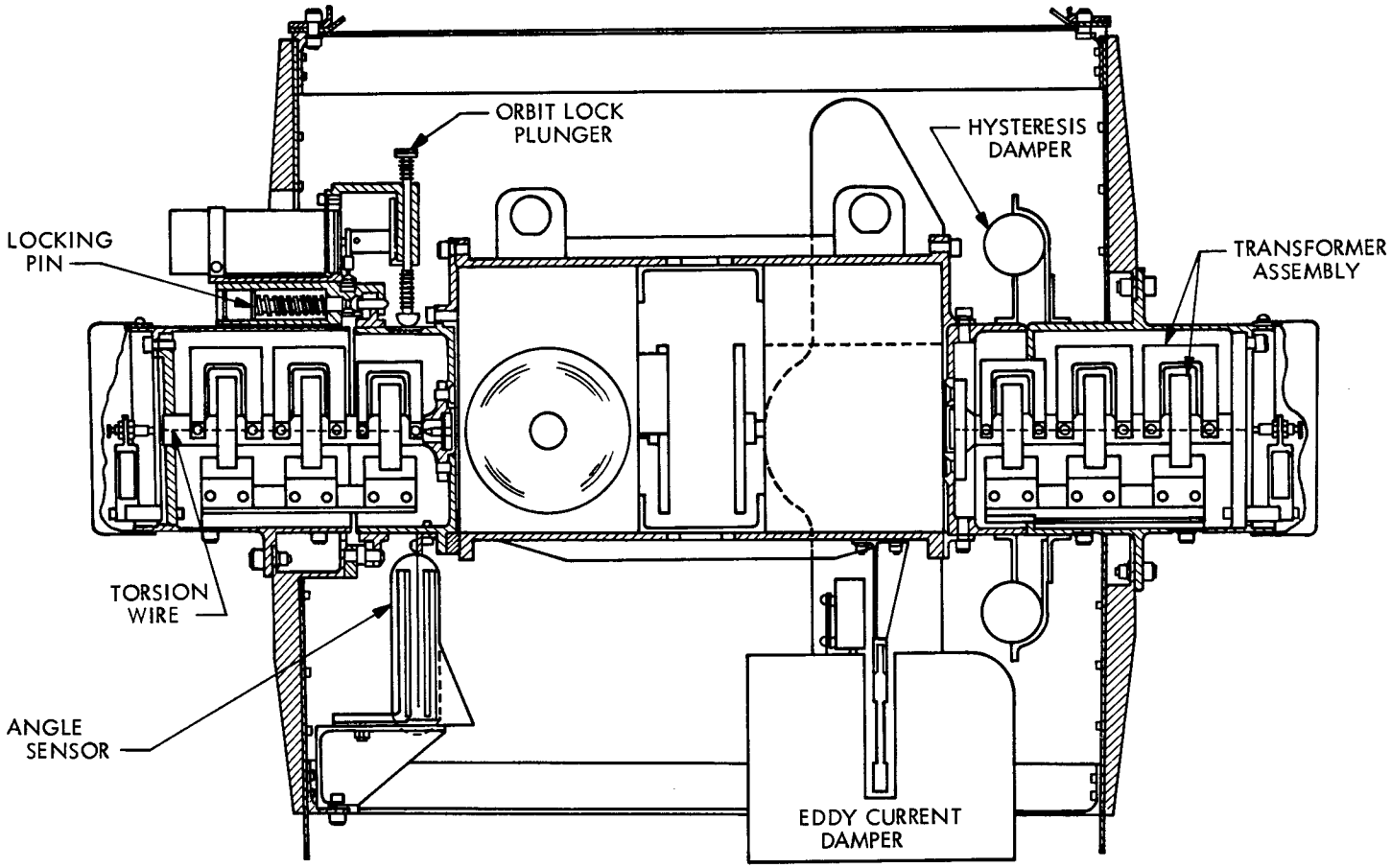

Figure 7.–Schematic of the combination eddy current and magnetic hysteresis damper for the DODGE spacecraft (from ref. 11)

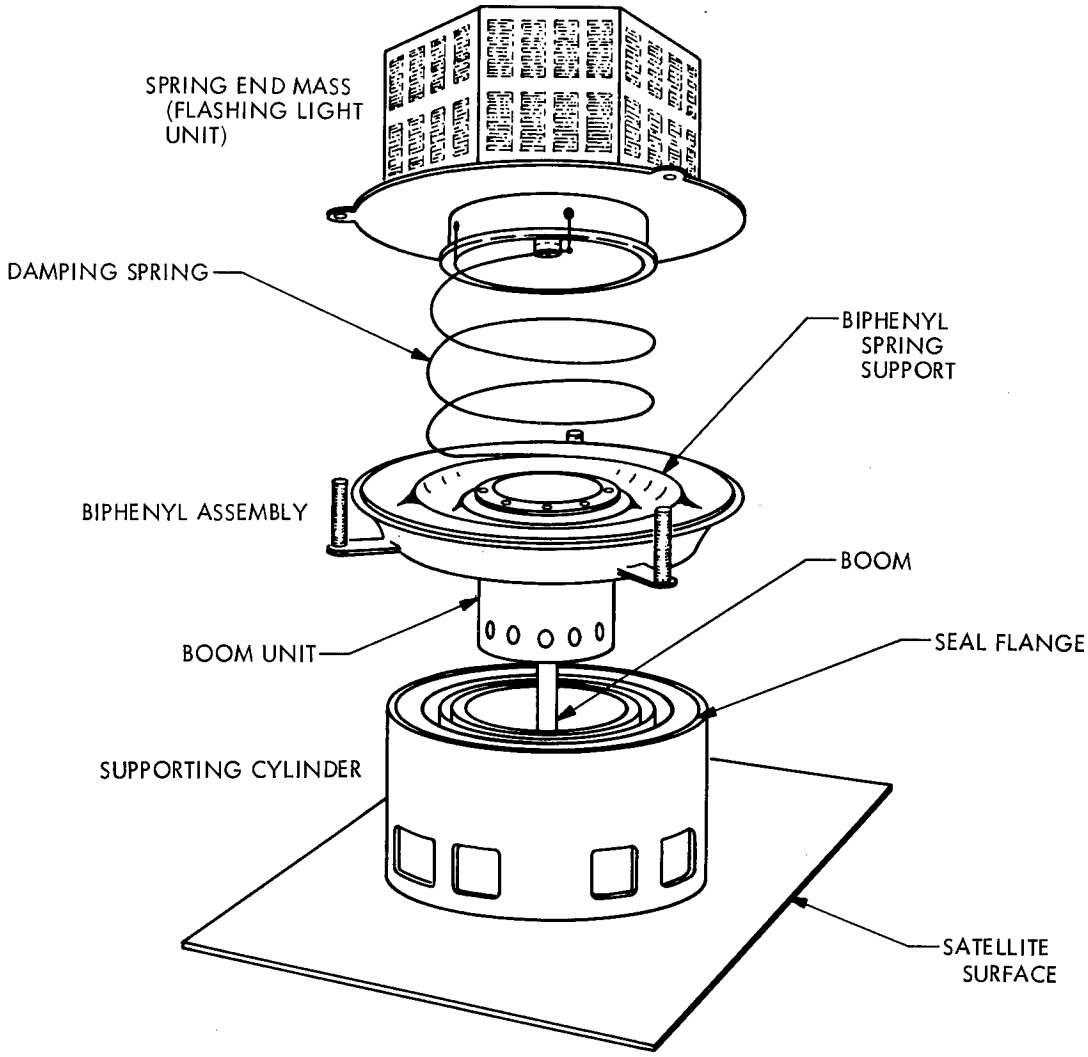

Figure 8.–Damper assembly for the early TRANSIT GG satellites (from ref. 12)

layer of gold to prevent the sublimation of cadmium in the vacuum of space. The spring is encapsulated in biphenyl, a sublimating material, which releases the damper spring one coil at a time as it sublimes. The housing and the damper support cylinder protect the biphenyl from sublimation in the vacuum of space until the boom is extended.

2.2 Flight Experience

2.2.1 Typical Parameters for GGL Damper Design

Table 2 gives pertinent design parameters for each of the spacecraft listed in table 1 and for those dampers described in section 2.1.2. The following listing is an explanation of table 2 and a summary of the available data on GG stabilized satellites.

TABLE 2.–Typical Parameters for Past GGL Dampers

(1) Satellite designation	(2) Spacecraft characteristics				(3) Comments
Cognizant organization	Purpose	Moments of inertia (kg-m²)	Orbit parameters altitude (km) / Inclination (deg)	*Stabilization* Pointing accuracy (rad)	
1961 AH2[a] (TRAAC)	Gravity-Gradient Stabilization Experiment	$I_x = I_y = 976$ $I_z = 30$	1111 32	*2 axis* None (See comments)	Did not achieve stabilization due to boom failure.
1963-22A[a] (TRANSIT-5A)	Doppler Navigation Satellite System	$I_x = I_y = 976$ $I_z = 30$	741 Polar	*2 axis* 0.17 – 0.35	Tumbled initially due to biphenyl sublimation.
1964-63A[a]	Navy Satellite Navigation System	$I_x = I_y = 2847$ $I_z = 24$	1111 Polar	*2 axis* None (See comments)	Power system failure.
1965-16B[b] (GGSE II)	Gravity-Gradient Stabilization Experiment	$I_x = I_y = 441$ $I_z = 1$	926 70	*2 axis* 0.17	
1965-89A[c] (GEOS-I)	Geodetic Research	$I_x = I_y = 841$ $I_z = 28$	2222 × 1111 60	*2 axis* 0.12 – 0.17 (after 2 days)	
1965-109A[a]	Navy Satellite Navigation System	$I_x = I_y = 1356$ $I_z = 24$	1111 Polar	*2 axis* 0.17	
1966-25B[d] (OV1-5)	Aerospace Research Optical Radiation	$I_x = 172$ $I_y = 22$ $I_z = 12$	985 × 1057 145	*3 axis* 0.28 – 0.99	
1966-53A[d] (GGTS)	Feasibility Study of Gravity-Gradient Stabilization at Synchronous Altitudes	$I_x = I_y = 2711$ $I_z = 3$	33,706 Equatorial	*2 axis* 0.26 in 60 days (See comments)	Magnetic contamination of one of the dampers.
1966-111B[d] (OV1-10)	Aerospace Research	$I_x = 705$ $I_y = 141$ $I_z = 48.1$	746 × 887 93	*3 axis* 0.17 excluding inversions (See comments)	Unplanned inversions, 3.14-rad vertical bias.

TABLE 2.–(*continued*)

(1) Satellite designation	(2) Spacecraft characteristics				(3) Comments
Cognizant organization	Purpose	Moments of inertia (kg-m²)	Orbit parameters altitude (km) / Inclination (deg)	*Stabilization* Pointing accuracy (rad)	
1967-31A[c] (ATS-A)	Evaluation of Gravity-Gradient Attitude Control and Stabilization Systems	$I_x = 9607$ $I_y = 7823$ $I_z = 1798$	213 × 12,779 28	*3 axis* None	No test of gravity-gradient stabilization due to highly elliptical orbit.
1967-53C[b] (GGSE-IV)	Gravity-Gradient Stabilization Experiment	$I_x = 902$ $I_y = 1091$ $I_z = 393$	926 70	*2 axis* 0.17 initially (See comments)	After two weeks pointing accuracy deteriorated to 0.52 rad in pitch, yaw, and roll for 8 – 10 months. Spacecraft has now lost yaw control.
1967-53D[b] (GGSE-V)	Gravity-Gradient Stabilization Experiment	$I_x = 1868$ $I_y = 2169$ $I_z = 624$	926 70	*3 axis* 0.17 initially (See comments)	After three weeks, spacecraft lost yaw control and has inverted about pitch axis twice.
1967-66F[a] (DODGE)	Experiments in Gravity-Gradient Stabilization at Near Synchronous Altitude	Variable with different boom lengths	33,336 6.5	*3 axis* No evidence of damping using either eddy current or magnetic hysteresis damper; 0.17 - 0.44 using enhanced hysteresis rods or sample and hold damping modes	Null position shift of eddy current and hysteresis dampers.
1967-72A[d] (OV1-86)	Aerospace Research	$I_x = 710$ $I_y = 678$ $I_z = 31$	552 × 615 102	*3 axis* None (See comments)	Failure of damper unit to pivot to operational position caused snarling of booms.
1967-92A[a]	Navy Satellite Navigation System	$I_x = I_y = 1356$ $I_z = 24$	1241 Polar	*2 axis* 0.17	

TABLE 2.–(continued)

(1) Satellite designation	(2) Spacecraft characteristics				(3) Comments
Cognizant organization	Purpose	Moments of inertia (kg-m²)	Orbit parameters altitude (km) / Inclination (deg)	*Stabilization* Pointing accuracy (rad)	
1968-02A[c] (GEOS-II)	Geodetic Research	$I_x = I_y = 515$ $I_z = 28$	1111 × 1574 106	*2 axis* 0.09 in 2 days	
1968-05A[c] (RAE)	Radio Astronomy Experiment	$I_x = 309{,}126$ $I_y = 242{,}691$ $I_z = 67{,}790$	6741 59	*3 axis* 0.03 pitch and roll 0.09 yaw	
1968-63A[c] (ATS-D)	Evaluation of Gravity-Gradient Attitude Control and Stabilization Systems	$I_x = 22{,}581$ $I_y = 18{,}364$ $I_z = 4{,}226$	250 × 889 29	*3 axis* None (See comments)	No test of GG stabilization due to highly elliptical orbit.

TABLE 2.–(continued)

(1) Satellite designation / Cognizant organization	(4) Damper-elements design principles			
	Damping	Suspension	Spring	Caging[f]
1961 AH2[a] (TRAAC)	Structural hysteresis Magnetic hysteresis	Helical spring[e] None	Helical spring None	Sublimation None
1963-22A[a] (TRANSIT-5A)	Structural hysteresis Magnetic hysteresis	Helical spring[e] None	Helical spring None	Sublimation None
1964-63A[a]	Magnetic hysteresis	None	None	None
1965-16B[b] (GGSE II)	Eddy current	Diamagnetic	None	E-Pyrotechnic
1965-89A[c] (GEOS-I)	Eddy current Eddy current	Diamagnetic None	None None	E-Pyrotechnic None
1965-109A[a]	Magnetic hysteresis	None	None	None
1966-25B[d] (OV1-5)	Viscous	Helical spring	Helical spring	Pyrotechnic
1966-53A[d] (GGTS)	Viscous	Diamagnetic	None	E-Pyrotechnic
1966-111B[d] (OV1-10)	Viscous	Helical spring	Helical spring	Pyrotechnic
1967-31A[c] (ATS-A)	Eddy current Magnetic hysteresis	Diamagnetic Torsion wire	Diamagnetic Torsion wire	Pyrotechnic None

TABLE 2.–(continued)

(1) Satellite designation / Cognizant organization	(4) Damper-elements design principles			
	Damping	Suspension	Spring	Caging[f]
1967-53C[b] (GGSE-IV)	Eddy current	Torsion wire (one axis) Flexure pivot (second axis)	Torsion wire Flexure pivot	Pyrotechnic
1967-53D[b] (GGSE-V)	Eddy current	Diamagnetic	None	E-Pyrotechnic
1967-66F[a] (DODGE)	Eddy current	Torsion wire	Torsion wire	Motorized
	Magnetic hysteresis	Torsion wire	Torsion wire	Motorized
	Sample and hold	None	None	None
	Enhanced magnetic hysteresis	None	None	None
1967-72A[d] (OV1-86)	Viscous	Torsion wire	Torsion wire	Passive
1967-92A[a]	Magnetic hysteresis	None	None	None
1968-02A[c] (GEOS-II)	Eddy current	Diamagnetic	None	E-Pyrotechnic
1968-05A[c] (RAE)	Magnetic hysteresis	Torsion wire	Torsion wire	Pyrotechnic
1968-63A[c] (ATS-D)	Eddy current	Diamagnetic	Diamagnetic	Pyrotechnic
	Magnetic hysteresis	Torsion wire	Torsion wire	None

TABLE 2.–(continued)

(1) Satellite designation	(5) Operational characteristics				(6) Physical characteristics	
Cognizant organization	Damper generic type	Reference field	Damping rate or equivalent (N-cm/rad/sec – except as noted)	Spring rate (N-cm/rad – except as noted)	Damper axes	Size and weight
1961 AH2[a] (TRAAC)	Two part Single part	GG Magnetic	50% of energy per cycle 1.2×10^{-2} N-cm (average)	1.6×10^{-8} N/cm N/A	1 3	80 turns of 0.02-cm wire in 20.3-cm dia. spring – 0.91 kg 4 rods, 147.3 by 0.28-cm dia. – 2.9 kg each
1963-22A[a] (TRANSIT-5A)	Two part Single part	GG Magnetic	50% of energy per cycle 1.2×10^{-2} N-cm (average)	1.6×10^{-8} N/cm N/A	1 3	80 turns of 0.02-cm wire in 20.3-cm dia. spring – 0.91 kg 4 rods, 147.3 by 0.28-cm dia. – 0.057 kg
1964-63A[a]	Single part	Magnetic	1.2×10^{-2} N-cm (average)	N/A	3	4 rods, 147.3 by 0.28-cm dia. – 0.057 kg
1965-16B[b] (GGSE II)	Two part	Magnetic	0.6	N/A	3	12.7-cm dia. sphere – 2.5 kg
1965-89A[c] (GEOS-I)	Two part Single part	Magnetic Magnetic	0.65 3.0×10^{-2}	N/A N/A	3 3	12.7-cm dia. sphere – 2.9 kg 3 sets of orthogonal copper-sheathed rods, 73.7-cm long
1965-109A[a]	Single part	Magnetic	4.0×10^{-3} N-cm (average)	N/A	3	2 rods, 121.9 by 0.28-cm dia. – 0.057 kg
1966-25B[d] (OV1-5)	Two part	GG	9.5 – pitch 4.0 – roll	2.1×10^{-2} – pitch 1.4×10^{-2} – roll	1	30.5 by 30.5 by 20.3-cm – 4.5 kg
1966-53A[d] (GGTS)	Two part	Magnetic	16	N/A	3	18.3-cm dia. sphere – 5.0 kg
1966-111B[d] (OV1-10)	Two part	GG	38 – pitch 9.5 – roll	7.8×10^{-2} – pitch 3.7×10^{-2} – roll	1	30.5 by 30.5 by 20.3-cm – 5.9 kg

TABLE 2.–(continued)

(1) Satellite designation	(5) Operational characteristics				(6) Physical characteristics	
Cognizant organization	Damper generic type	Reference field	Damping rate or equivalent (N-cm/rad/sec – except as noted)	Spring rate (N-cm/rad – except as noted)	Damper axes	Size and weight
1967-31A[c] (ATS-A)	Two part	GG	9.0	1.2×10^{-2}	1	24.9-cm dia. by 30.5-cm long – 10.9 kg (combined size and weight of both dampers)
	Two part	GG	1.73×10^{-3} N-cm	1.2×10^{-2}	1	
1967-53C[b] (GGSE-IV)	Two part	GG	22.0 – pitch 4.0 – roll	2.6×10^{-1} – pitch 5.7×10^{-2} – roll	2	22.9-cm dia. by 20.3-cm long – 5.8 kg
1967-53D[b] (GGSE-V)	Two part	Magnetic	2.8	N/A	3	12.7-cm dia. sphere – 3.1 kg
1967-66F[a] (DODGE)	Two part	GG	0 to 5	8.4×10^{-4}	1	33-cm dia. by 22.9-cm long – 9.1 kg (combined size and weight of first two dampers)
	Two part	GG	$\pm 2.0 \times 10^{-4}$ to 25.0×10^{-4} N-cm	8.4×10^{-4}	1	
	Single part	Magnetic	N/A	N/A	3	9.1 kg (combined weight of second two dampers)
	Single part	Magnetic	N/A	N/A	3	
1967-72A[d] (OV1-86)	Two part	GG	41 – pitch 12.9 – roll	9.1×10^{-2} – pitch 4.5×10^{-2} – roll	2	15.2-cm dia. by 38.1-cm – 4.5 kg
1967-92A[a]	Single part	Magnetic	4.0×10^{-3} N-cm (average)	N/A	3	2 rods, 112.9 by 0.28-cm dia. – 0.057 kg each
1968-02A[c] (GEOS-II)	Two part	Magnetic	0.7	N/A	3	13.5-cm dia. sphere – 2.9 kg

TABLE 2.–(continued)

(1) Satellite designation	(5) Operational characteristics				(6) Physical characteristics	
Cognizant organization	Damper generic type	Reference field	Damping rate or equivalent (N-cm/rad/sec – except as noted)	Spring rate (N-cm/rad – except as noted)	Damper axes	Size and weight
1968-05A[c] (RAE)	Two part	GG	7.3×10^{-2} N-cm	0.71	1	7.6 by 7.6 by 15.2-cm – 0.91 kg
1968-63A[c] (ATS-D)	Two part	GG	5.6	2.1×10^{-3}	1	24.9-cm dia. by 30.5-cm long – 10.9 kg (combined size and weight of both dampers)
	Two part	GG	12×10^{-5} N-cm, nominal for angles less than 0.17 rad	2.1×10^{-3}	1	

[a]Applied Physics Laboratory/U.S. Navy (USN/APL)
[b]Naval Research Laboratory (NRL)
[c]National Aeronautics and Space Administration (NASA)
[d]U.S. Air Force (USAF)
[e]The helical spring in this damper can only loosely be designated as a suspension element
[f]E means external caging only

(1) Satellite Designation/Cognizant Organization

The first heading in table 2 identifies the satellite by the international designation and popular name, if it has one. The satellites are listed chronologically to indicate trends in damper design. The cognizant systems organization, as denoted by the (a) through (d) superscript designation in column 1 and the legend at the bottom of the table, for about half of all the GG satellites has been the Applied Physics Laboratory (APL) of The Johns Hopkins University under the direction of the U. S. Navy. The rest of the GG satellites are distributed among the National Aeronautics and Space Administration (NASA), The Naval Research Laboratory (NRL), and the U. S. Air Force.

(2) Spacecraft Characteristics

The four columns under this heading in table 2 include those spacecraft characteristics which are pertinent to the evaluation of dampers.

- *Purpose.* A satellite is considered (a) experimental if one of its primary goals is GG-stabilization experimentation, and (b) operational if GG stabilization is instrumental in accomplishing the satellite mission. In this sense, about 40% experimental and 60% operational GG-stabilized satellites have been launched. Valuable GG technological experience also has been gained from the operational satellites such as from the unplanned inversions of 1966-111B (OV1-10).

- *Moments of Inertia.* The satellite moments of inertia are listed so that damper physical characteristics can be related to the satellite configuration and size. On two out of three of the satellites, the moments of inertia about the x and y axes are from 5 to 50 times larger than the moment of inertia about the z axis.

- *Orbit Parameters.* The altitude and inclination of the satellites are listed for each satellite. Most of the GG stabilized satellites are at altitudes between 555.5 and 1852 km and orbit inclinations between 60 and 120 deg.

- *Stabilization/Pointing Accuracy.* Stabilization refers to whether the satellite is two- or three-axis stabilized. This is not to be confused with the number of damper axes shown in table 2. All GG satellites are stabilized in pitch and roll, and the three-axis stabilized satellites also have yaw stabilization. Of the GG stabilized satellites that were launched, in the past, about 60% were two-axis stabilized and 40% were three-axis stabilized satellites. However, it is noted that most recent GG satellites are three-axis stabilized.

  Pointing accuracy indicates the largest angular deviation of the satellite yaw axis from the local vertical. The presented values refer to the steady state pointing accuracies which were observed during at least 90% of the steady-state operation of the spacecraft. If the satellite is three-axis stabilized, it also includes the maximum horizontal angular deviation of the roll axis from the flight vector. Some of the listed data are based on estimates, since the satellites are not tracked continuously.

(3) Comments

This heading in table 2 contains comments on spacecraft performance. Problems that are specifically related to the GGL damper are discussed in section 2.2.2 of the text.

(4) Damper-Elements Design Principles

The four columns under this heading in table 2 define the damper principles used for each damper listed.

- *Damping.* About half of all GGL dampers use magnetic hysteresis damping. Eddy current damping and viscous damping has been used in most of the remaining dampers, while only the earliest GG satellites used mechanical hysteresis dampers which were eventually abandoned because of their inefficiency. On the other hand, the hysteresis rod dampers that were used on the first GG satellite are still being used with only minor modifications.

- *Suspension.* The suspension and spring are normally provided by the same element but are listed separately in the table because some suspensions do not have a restoring torque, and in one type of damper the restoring torque was provided by a separate element. Diamagnetic torsion-wire suspension and coil-spring suspensions have been extensively used, while flexure pivots were used only once as the suspension for one axis of a two-axis damper – the other suspension in this case being a torsion wire.

- *Spring.* The ATS-A and -D dampers are the only instances in which the restoring torque was provided independently from the suspension.

- *Caging.* None of the single-part dampers require caging. The two-part hysteresis dampers on the ATS-A and -D satellites were ruggedized and thus did not require caging. Most of the caging mechanisms of the remaining two-part dampers have been pyrotechnically activated. Two dampers have used a motorized caging mechanism which also provided a recaging capability. The five lossy spring dampers have been encapsulated in a subliming material.

(5) Operational Characteristics

The four columns under this heading in table 2 describe the operational characteristics for each damper listed.

- *Damper Generic Type.* This column gives the generic type of each of the libration dampers (i.e., single or two part). Approximately, 60% of the dampers flown have been two-part dampers and 40% have been single-part dampers.

- *Reference Field.* About 60% of the dampers flown consisted of a primary and secondary part. Of these, about 60% of the secondary parts were referenced to the gravitational field and about 40% were referenced to the magnetic field. In addition, the 1967-72A (OV1-86) satellite was designed to utilize aerodynamic forces to assist the yaw stabilization. All single part dampers were referenced to the earth's magnetic field.

- *Damping Rate.* The damping rates of the eddy current damping range from 0.6 to 22 N-cm/rad/sec, and for viscous damping, the coefficients range from 1.6 to 25×10^2 N-cm/rad/sec. The average damping torques for magnetic hysteresis dampers range from 1.2×10^{-4} to 25×10^{-4} N-cm.

- *Spring Rate.* The torsion wire spring rates range from 84×10^{-5} to 0.7 N-cm/rad. The coil springs that have been used had spring rates ranging from 1.4×10^{-2} to 7.8×10^{-2} N-cm/rad. Spring rates for the two diamagnetically provided restoring torques of the ATS-A and -D satellites have been 2.1×10^{-3} and 12×10^{-3} N-cm/rad. The one flexure pivot that was used had a spring rate of 57×10^{-3} N-cm/rad.

(6) Physical Characteristics

The two columns under this heading in table 2 describe the three major physical characteristics, i.e., damper axis, size and weight, for each damper listed.

- *Damper Axes.* Most two-part dampers are of single-axis configurations, while all single-part rod dampers are three-axis dampers.

- *Size and Weight.* The size and weight of the dampers vary from 0.1 kg for two 2.8-mm-diameter by 147.3-cm-long, single-part hysteresis rod dampers to a 10.9-kg, 24.9-cm-diameter by 30.5-cm-long combination eddy current and hysteresis two-part damper. The GG anchored eddy current and viscous dampers are the heaviest. The magnetically anchored eddy current and viscous spherical dampers are somewhat lighter. The GG anchored magnetic hysteresis dampers are the lightest of the two-part dampers. It is noted that GGL dampers should be compared on the basis of weight and size only in conjunction with the performance, efficiency, and design requirements.

2.2.2 Flight Problems

GGL dampers have been applied successfully in many GG-stabilized spacecraft to date, but in several instances unforeseen difficulties have caused pointing errors and dynamic instabilities and have contributed to operational failures of spacecraft. The problems that were experienced include damper suspension failures, inherent sources of pointing errors, and adverse interaction with the space environment.

(1) Damper Suspension Failures

The following two damper suspension failures have occurred.

- *Magnetic Contamination.* The GGTS spacecraft had identical spherical dampers with viscous damping located at the end of each of the two booms. The spacecraft was in a near-synchronous equatorial orbit. The design goal of the GGTS dampers was that the spacecraft have a steady state pointing error no larger than 0.14 rad, which it was to achieve in 200 days. Instead, it reached a steady state pointing error of 0.26 rad in 60 days.

The rapid initial damping was the first indication that there was a problem. The telemetry data also indicated that the spacecraft tended to point toward the North Pole rather than the center of the earth. It was observed that the bias (i.e., nominal pointing error) toward the North Pole was periodic, coinciding with the rotation of the spacecraft with respect to the earth. This suggested that the anomalous behavior was associated with the earth's magnetic field.

A plausible explanation for the unplanned performance of the GGTS spacecraft is that a small magnetic object was attracted to the damper assembly by the magnet some time after the final assembly of the damper on the spacecraft. The cause of the magnet becoming captured by the magnetic particle, producing a magnetic moment fixed in the spacecraft, was due to the torque on the magnet generated by the particle being larger than that produced by the earth's magnetic field. In October of 1966, the angle between the captured magnet and the earth's magnetic field became large, producing enough torque to drag the particle over the surfaces of the damper to a point where the field of the particle was more in line with the earth's field. This essentially eliminated the bias moment, and the spacecraft behavior from then on was close to nominal. This information on the spacecraft's later history is available in reference 6.

- *Null Position Shift.* The DODGE spacecraft has several GGL dampers including an eddy current damper and a magnetic hysteresis damper suspended by a single torsion-wire suspension.

  The damper was uncaged, prior to extending the booms, to observe the free motion by means of the relative angle sensor, and it was expected that the damper would quickly reach the null position at 0 rad. Instead, it moved toward an equilibrium position at 0.5 rad. The shift in the null position of the suspension might have been responsible for the anomalous behavior of the spacecraft, since it caused a bias torque and severely limited the total boom motion (ref. 2).

(2) Inherent Sources of Pointing Errors

The following are two inherent sources of damper pointing error.

- *Magnetic Hysteresis Deadband.* Hysteresis damping is derived from energy dissipation due to rotation of elementary magnetic domains in the damper vane when it moves with respect to a magnetic field. Magnetic hysteresis damping "deadband" (also called "backlash") results from the need to have a certain minimal angle of rotation before there are sufficient reversals of magnetic domains to develop the full damping torque. Oscillations within the deadband do produce some damping, but the dissipation per unit amplitude of oscillation is less than that produced by higher excursions (ref. 10).

  The deadband of the ATS-A hysteresis dampers was designed to be 17.5 mrad; the effective deadband of the hysteresis damper of the ATS-D satellite was designed to be 50% of that amount by shaping the hysteresis material to provide a small torque near the null position for steady state stabilization. The deadband of the RAE damper is estimated from actual flight data to be 35 mrad.

- *Pointing Error Due to Magnetic Anchoring.* Magnetically anchored GGL dampers have a secondary part that is coupled to the earth's magnetic field while the primary part is stabilized by the earth's gravitational field. Magnetic anchoring inherently induces a pointing error of GG-stabilized spacecraft since the magnetic and gravitational fields are shaped differently.

  (a) *Earth's magnetic field.* The variation of the magnetic field with respect to the local vertical is primarily a function of the orbital inclination. Magnetically anchored dampers on GG-stabilized spacecraft in polar and equatorial orbits experience the extremes of these variations.

  GEOS-II is an example of a spacecraft using a magnetically anchored spherical damper in a low-altitude, near-polar orbit. After 2 days this spacecraft reached a steady state pointing error of less than 87.5 mrad, of which 17.5 mrad is attributed to torques induced by magnetic anchoring. Similar flight experience was gained from other spacecraft, such as GGSE-I, II, III, and V and GEOS-I, which were launched into similar orbits with inclinations above 45 deg (refs. 3, 4). No GG-stabilized spacecraft with magnetically anchored dampers were launched in low-inclination, low-altitude orbits, and only one spacecraft, GGTS, (discussed in sect. 2.1.2(2)) was launched into a near-synchronous equatorial orbit prior to 1969. The analysis of this spacecraft indicated that it should have reached a pointing accuracy of 0.14 rad and steady state conditions in 200 days. These values were not verified, since one of the ball dampers on this spacecraft was magnetically contaminated, as is discussed in section 2.2.2(1).

  (b) *Magnetic kick.* Spacecraft with magnetically anchored GGL dampers in high orbits experience an additional disturbance torque due to the interaction of the earth's magnetic field with solar wind and solar storms. The wind compresses the magnetosphere on the side that faces the sun and elongates it on the side that is in the shadow of the earth. Solar storms cause further relative motion of the magnetic field vector, which is unpredictable in time and location in orbit. Data from the Explorer 6 satellite show that the direction of the magnetic field can change as much as 1 rad and the field strength can decrease to half of the nominal intensity (ref. 14).

  An impulsive disturbance of the stabilization of the spacecraft, "magnetic kick," is experienced each time the spacecraft passes through a disturbance zone in the magnetosphere. This phenomenon was actually observed from the attitude data from the GGTS satellite (refs. 5, 6).

(3) Adverse Interaction with Space Environment

Magnetic interaction of the residual dipole of the GGL damper on the OV1-10 satellite was probably a contributing factor to the loss of yaw stability of the spacecraft (ref. 15). Other than this, there are no reports of catastrophic failures of dampers due to space environment but it is certain that damper performance degrades when it operates over an extended period of time in orbit due to the effects shown in table 3.

TABLE 3–Environmental Design Problems

Environmental Aspect	Resulting Design Problems
Thermal	Change in damping rate and suspension characteristics. Material deformation can cause binding and seizure.
Radiation	Change in damping rate of fluid dampers. Degrades thermal properties of exposed surfaces.
Vacuum	Cold welding and sublimation of damper components.
Magnetic	Disturbance torques due to residual dipole of damper.
Weightlessness	Change in suspension characteristics. Complicates ground testings.
Meteorites	Erosion of thermal control surfaces.

Sublimation of biphenyl in the hard vacuum of space caused temporary spacecraft instabilities experienced on TRANSIT-5A, 1963-38B and 1963-49B satellites. Biphenyl was used for caging the damper for protection during launch. The small lateral forces acting at the ends of long booms where the dampers were located caused these spacecraft to tumble. This problem was solved on the 1964-25A satellite by using benzoic acid, a material that sublimates very slowly (ref. 12).

3. DESIGN CRITERIA

Libration dampers shall be designed to dissipate the energy of transient oscillations (librations) about the stable equilibrium attitude of GG stabilized spacecraft within prescribed operational tolerances.

3.1 Damper Design

The design of GGL dampers should be an iterative process which involves (1) the definition of the design constraints that must be satisfied, (2) the selection of the design principles for each damper element, (3) the analytical work, and (4) the electromechanical design of the damper. The mechanisms designer should be involved in all phases of the iterative process to assure that the resulting hardware is as simple and foolproof as possible, consistent with the design requirements.

3.1.1 Input Design Constraints

The constraints that govern the design of the damper are both *imposed*, i.e., derived from the mission requirements for which the spacecraft is designed, and *implied*, i.e., those additional constraints that must be satisfied for all spacecraft mechanisms applications.

The following is a checklist of *imposed* constraints:

(1) Weight and size of spacecraft

(2) Orbital parameters

(3) Pointing accuracy

(4) Time permitted for GG acquisition

(5) Prescribed lifetime

The following is a checklist of *implied* constraints:

(1) Thermal design

(2) Magnetic design

(3) Radiation protection

(4) Space vacuum

(5) Weightlessness

(6) Spacecraft integration

(7) Launch environment

(8) Cost

The first seven of the above implied constraints form the headings for sections 3.2 through 3.8 (and also sections 4.2 through 4.8). The eighth constraint, cost, should be minimized for the GGL damper but should be considered in the context of the overall GG spacecraft cost and importance of the mission.

3.1.2 Selection of Design Principles

The selection of the most appropriate principle of operation for each of the four basic damper elements, i.e., the damping element, suspension, spring, and caging device, consist of trade-off studies between the following desirable design features:

(1) High damping-to-weight ratio

(2) Low threshold of operation

(3) Low weight and volume

(4) Favorable geometry

(5) Efficient operation at large and small libration amplitudes

(6) Insensitivity to temperature

(7) Ease of mathematical modeling

(8) Capability of testing on the earth

(9) Small effect on spacecraft static and dynamic balance

(10) Flexibility of mounting location and orientation within the spacecraft

3.1.3 Design Analysis

The GGL damper analysis consists of mathematical modeling of the GG stabilized spacecraft system. The result of the analysis is a set of design parameters for the GGL damper, which include numerical values for the following quantities:

(1) Damping coefficient or equivalent

(2) Spring rate

(3) Null position

(4) Lateral and axial suspension stiffness

(5) Tolerances for each of the above parameters

(6) Residual magnetic dipole

3.1.4 Mechanisms Design

The effect of the implied constraints and design parameters on the detailed mechanisms design are the subject of the subsequent sections of this monograph. The design should assure that the damper is capable of meeting the design specifications which were generated in the damper analysis. Mechanisms design should consist of preliminary and detailed design. The preliminary design should include all damper components and should determine their approximate location, weight and size, and their interrelation with other damper components. The detailed design should result in a set of drawings and specifications for damper manufacture, assembly, and testing.

3.2 Thermal Design

Temperature changes in the damper result from both changes in environment and heat generated by damper component parts such as motors and light sources for angle readout devices. These temperature changes can have significant adverse effects upon at least the following damper performance parameters: damping coefficient or equivalent, spring rate, null position, and mechanical clearance. Therefore either the temperature environment must be maintained relatively constant or the sensitivity of the above parameters must be well understood and minimized. The following four aspects of the thermal design should be considered:

(1) Thermal analysis

(2) Damping element

(3) Damper suspension

(4) Thermal control

3.3 Magnetic Design

The design should minimize adverse effects of ambient magnetic field upon performance of the GGL damper as well as the effects of any of the magnetic properties of damper upon other spacecraft systems. Adverse effects resulting from the following sources should be well understood and/or minimized:

(1) Magnetic degradation of damper components

(2) Unbalanced magnetic dipoles

(3) Magnetic deadband in magnetic hysteresis dampers

(4) Magnetic contamination

3.4 Radiation Protection

Various parts of the damper system can be susceptible to performance degradation due to exposure to nuclear and cosmic radiation in space. Two precautions which should be taken for radiation sensitive materials are use of radiation resistant materials or radiation shielding. Additional precautions can be taken (see sect. 4.4) in the case where there are nuclear reactors on-board the spacecraft.

3.5 Space Vacuum

The design should be immune to or should be protected from the effects of the vacuum of space. The following effects should be considered:

(1) Evaporation of fluids

(2) Cold welding (permanent and temporary)

(3) Sublimation of materials

3.6 Weightlessness

When operating in a zero-g environment, the damper should be designed to have a minimum change in (1) damping, (2) spring rate, and (3) null position. Particular attention should be paid to the effect of weightlessness on the above parameters because of the difficulty involved in the testing for these effects.

3.7 Spacecraft Integration

The design shall be consistent with the requirements and limitations imposed by the spacecraft system, including:

(1) Required location of each damper component

(2) Permissible weight and size

(3) Physical and functional interfaces with the spacecraft and booms

(4) Electrical isolation or conductivity through the damper suspension

(5) Power compatibility

3.8 Launch Environment

The GGL damper shall be protected from the effects of the launch environment and during boom deployment. The factors that should be considered in selecting the method of protection include mechanical stress and thermal design considerations, weight and size of components, and whether recaging is required. The simplest of the following methods that is consistent with the particular design requirements should be selected (listed in order of increasing complexity):

(1) Permanent attachment

(2) Ruggedizing

(3) Caging

3.9 Performance Verification

In order to help ensure that the damper will meet all the performance parameters under all the imposed environments, close attention should be paid to the following:

(1) Failure analysis

(2) Ground testing

(3) Inflight monitoring

4. RECOMMENDED PRACTICES

The following recommendations should serve as guidelines for the selection of geometry, materials, and procedures which satisfy specified and implied functional criteria for GGL dampers. These recommendations are based on the experience gained through prior design and flight operation but are not meant to restrict the designer to existing damper configurations.

4.1 Damper Design

Section 3.1, discussed above, lists the four aspects of damper design which should be followed in developing the correct damper for a specific application. The iteration of these four aspects is

illustrated in figure 9. The approach starts with a list of imposed constraints resulting from mission requirements and, through a succession of iterations, arrives at a specific mechanism design. It is usually the case that, although the imposed parameters of section 3.1.1 dictate the numerical values of the design parameters of section 3.1.3, it is the implied constraints of sections 3.2 through 3.8 which most importantly govern the final configuration selected. The recommended practices relative to the implied constraints are detailed in the following subsections. Suggestions relative to the tradeoffs between element design principles, imposed constraints, and desirable design features are implicit in the discussion which follows relative to the implied constraints. Mathematical modeling as part of the design analysis is discussed in references 16, 17, and 18.

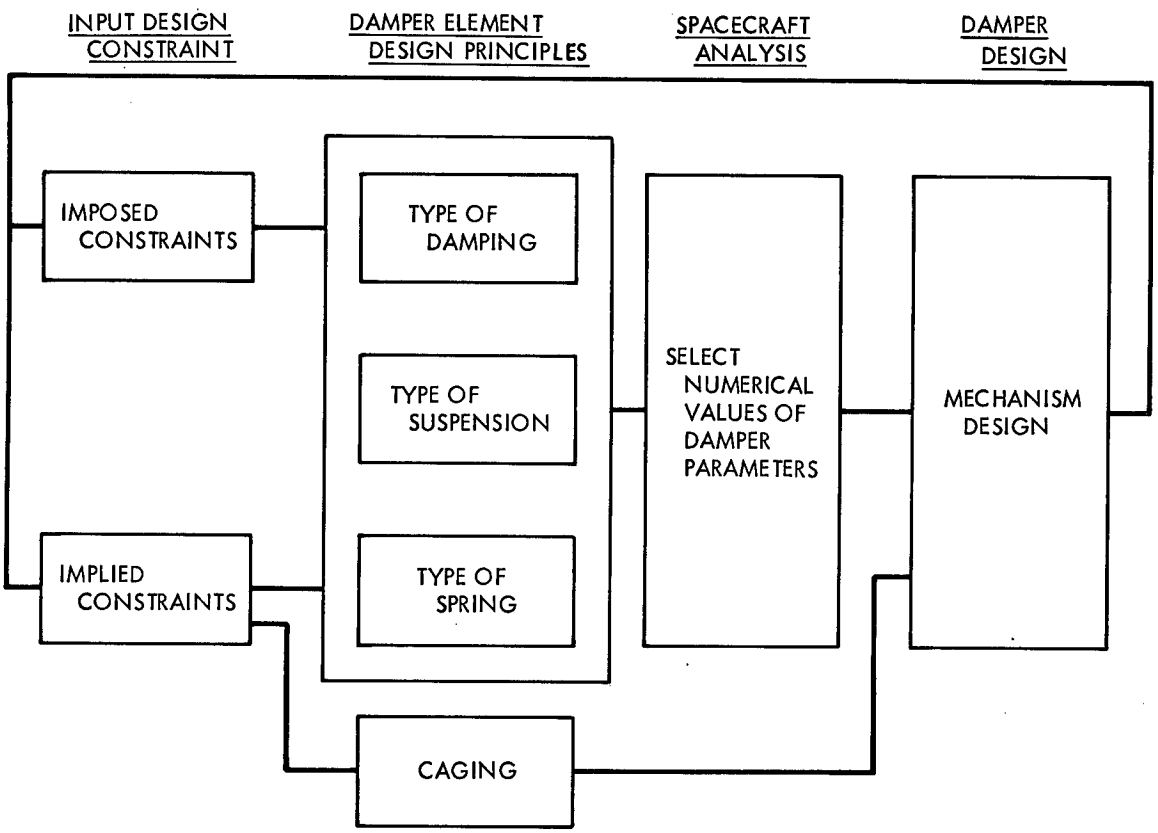

Figure 9.–General scheme for GGL damper design

4.2 Thermal Design

Thermal design should minimize temperature variations within the damper to assure that the resulting variations in the operational characteristics of the damping element and the damper suspension will not adversely affect the performance of the GG stabilized spacecraft. Specific

recommendations concerning these aspects of thermal design are presented in the following subsections.

4.2.1 Analysis

The thermal analysis should take into account (1) heat received and emitted by radiation and conduction, and (2) heat generated by active components in the damper, e.g., relative angle sensors. The amount of heat exchange with other spacecraft subsystems and with the space environment should be ascertained by considering the orbit, the spacecraft configuration, the location of the damper within the spacecraft, and the thermal coatings of the damper surfaces. Typically, heat generated by the incandescent lamps and the associated electronics of the relative angle sensor in the ATS-A damper is 0.9 W. The heat generated by dissipation of libration energy can be neglected in the calculations.

4.2.2. Damping Element

The susceptibility of damping to temperature variation depends primarily on the damping principle that is employed.

(1) Viscous Damping

Care should be exercised in the thermal design of viscous dampers, since they are most affected by temperature variation. All viscous dampers that have been built to date have used silicone fluids, since their viscosity and associated damping are the least affected by temperature changes of all suitable fluids. The desired damping rate may be obtained by mixing several fluids of different viscosities in amounts that depend on the anticipated operational temperature range and geometry of the damper. Methods which provide automatic temperature compensation in viscous dampers by regulation of the fluid flow pattern to counteract the change in viscosity should be considered.

(2) Eddy Current Damping

Copper and aluminum alloys are suitable materials for eddy current damper vanes because of their high electrical conductivity. The factors that should be considered in selecting the material are: (1) change of electrical resistance due to temperature variation, (2) specific heat, and (3) total required weight. The temperature coefficient of electrical resistance of copper is 15% lower than for aluminum, but the density of copper is three times higher. The specific heat of copper is less than half of that for aluminum. The damper vanes of the DODGE and GGSE-IV satellite dampers were made of copper, whereas aluminum was used in the ATS-A and -D satellites. Both copper and aluminum have been used for the damping elements of spherical dampers.

(3) Hysteresis Damping

Magnetic hysteresis damping is essentially unaffected by temperature variations, and no special precautions are necessary beyond adherence to sound spacecraft thermal design practices. This is one of the principal advantages of hysteresis dampers.

4.2.3 Suspension

The effect of the temperature excursions of the GGL damper on the spring rate and the null position of the suspension should be minimized by considering (1) thermal expansion and contraction of suspension components, and (2) change in material characteristics as a function of temperature.

(1) Expansion and Contraction of Suspension Components

The susceptibility of the spring rate and null position due to thermal expansion and contraction of damper components depends primarily on the type of suspension used. The torsion wire suspension is sensitive to even very small changes in the wire diameter since the spring rate is proportional to the fourth power of the wire diameter. Therefore, thermal deformation of damper components which provide tension in the wire should be minimized to provide uniform tension throughout the operation of the damper. Because of the nonhomogeneity of the wire material, the null position is also susceptible to change due to variation of tension in the wire. The coil spring suspension should be designed so that thermal deformations of suspension components will cause the least changes in the coil diameter, free length of the spring, and number of free turns. The null position of the flexure pivot suspension is susceptible to uneven temperature distributions. Null position shifts should be minimized by providing adequate thermal conductivity between the flexure elements. The diamagnetic suspension should be designed for minimum thermal deformation of the components determining the gap between the magnets and the diamagnetic material.

(2) Changes in Material Characteristics as a Function of Temperature

The material characteristics that should be considered in the thermal design in selecting the materials for mechanical suspensions are (1) modulus of elasticity, (2) modulus of shear, (3) mechanical relaxation, and (4) creep. The permanent (inelastic) effects of the variations of these characteristics are of primary importance, while the transient effects can, in general, be neglected in the thermal design.

The variation of the modulus of elasticity should be examined since it affects the load capacity of the suspension and can cause total failure of the damper. The load capacity of both music wire and beryllium copper — the most commonly used materials in mechanical suspensions — falls off rapidly with temperatures only slightly above normal damper operating temperatures (ref. 19). The long-term effects of the variation of the moduli of elasticity and shear are closely related to the relaxation and creep phenomena. Relaxation is a gradual loss of restoring torque under a constant deflection, while creep is a slow increase in deflection under a constant

load. Mechanical suspensions are susceptible to a combination of relaxation and creep because they are exposed to a slowly varying dynamic loading over extended periods of time. The effects of relaxation and creep should be minimized by thermal treatment and mechanical cycling of the suspension.

4.2.4 Thermal Control

Passive thermal control, i.e., no moving mechanical parts or external power for generating heat, should be used for thermal regulation.

The selection of proper surface finishes is the principal means of passive thermal control of dampers. The temperature variations should be held as low as possible by selecting finishes having low absorptivity and emissivity. The desired average operating temperature, on the other hand, should be obtained by selecting finishes that have an appropriate ratio of these surface characteristics. The final selection of surface finishes should also take into account the degradation of thermal characteristics over extended periods of time in orbit, and the effects of the ground environment and handling.

Thermal control considerations influence the selection of the type of mounting and of the location of the damper within the spacecraft. For example, dampers that are attached at the tip of the boom and are extended away from the spacecraft should be mounted on a thermal isolation joint to prevent excessive heat loss through the large radiating surfaces of the boom.

4.3 Magnetic Design

Magnetic design should limit (1) magnetic degradation of the damper components used for damping and suspension, (2) unbalanced magnetic dipoles, (3) the deadband due to reversal of magnetic domains in hysteresis dampers, and (4) magnetic contamination. The recommendations concerning each of these aspects of the magnetic design are presented in the following subsections.

4.3.1 Magnetic Degradation of Damper Components

Magnetic degradation of damper components should not alter the damping rate and the damper suspension force beyond prescribed tolerances during the specified lifetime. The following recommended practices should be considered.

One practice is that inherently stable materials for magnets should be used. Alnico V magnets are most commonly used, since they are structurally and magnetically stable in the thermal and radiation environment in space. Alnico VIII is an even more magnetically stable material, but the achievable damping per unit weight is about 10% lower (ref. 20).

A second practice is that excessive mechanical strains in magnetic materials, particularly those due to launch vibrations, should be prevented. Mechanical strain can cause a change in alignment of the magnetic domains in magnets, resulting in a weakening of the primary magnetic flux and diminished damping.

A third practice is that all magnetic materials should be aged; i.e., all parts of the magnetic circuit should be allowed to reach a condition of magnetic equilibrium. The time required for aging ranges from several hours to several years, depending on the composition of the material (ref. 21).

A fourth practice is that exposure to strong magnetic fields produced by either permanent magnets or electrical currents during ground handling and storage and during damper operation in space should be avoided.

A fifth practice is that magnetic dipole degradation due to environmental testing of the damper should be minimized. Degradation should, typically, not exceed 2% of the nominal dipole.

4.3.2 Unbalanced Magnetic Dipoles

(1) GG Anchored Dampers

The amount of the tolerable unbalanced magnetic dipole should be determined in the dynamic study of the GG stabilization system of the particular spacecraft. The permissible disturbance torque due to the interaction of the unbalanced magnetic dipole with the earth's magnetic field depends primarily on the orbit, the pointing accuracy, and the available GG stabilization torque due to the mass distribution of the spacecraft. The following practices should be considered in the magnetic design:

- A typical unbalanced magnetic dipole of GG spacecraft is 0.1 ampere meters squared (100 pole-cm). The magnetic dipole (moment) in ampere meters squared is equal to the torque on the spacecraft in newton meters divided by the magnetic field intensity in webers per meter squared (or tesla). The magnetic field intensity varies with the orbit altitude and inclination. For a 741 km-high equatorial orbit, the field intensity is about 2.5×10^{-5} Wb/m^2 and the resulting torque on the spacecraft is 2.5×10^{-6} N-m. The corresponding torque for a polar orbit of the same altitude is about twice as much. The magnetic field intensity in a synchronous orbit of any inclination is much smaller, but the tolerable disturbance torques are also smaller because of the weaker GG stabilization torque and the generally higher pointing accuracy required in higher orbits.

- The cost factor should be included in the considerations involved with determining the permissible unbalanced magnetic dipole since the complexity of balancing magnetic dipoles rises rapidly as the residual dipole moment becomes very small.

- Preference should be given to the damping principle which results in minimum magnet weight, since the residual magnetic dipole is roughly proportional to the total weight of the magnets in the damper. Eddy current dampers require significantly

more magnet weight than any other type of damper for a given loss of energy per libration cycle. Viscous dampers require less weight, and the magnetic hysteresis damper requires the least weight for an equivalent damping rate. This is illustrated by the ATS-D spacecraft, which contains a hysteresis damper and an eddy current damper that provide comparable damping while the corresponding magnet weights are 2 and 900 g (excluding magnets required for diamagnetic suspension). Magnet weight of the OV1-5 viscous damper is 200 g for comparable damping.

- Effective magnetic shielding should be employed whenever possible to contain the stray magnetic field within the damper. All openings in the damper shielding, such as the slots for boom motion, should be made as small as possible.

- Preference should be given to magnetic circuits having an even number of magnets since they nominally do not produce an unbalanced magnetic dipole. For this reason, the C-magnets in the OV1-86 spacecraft damper were each replaced with two parallel bar magnets in the course of the magnetic design and development.

- Magnets should be carefully matched for intensity and direction. The tolerances on the magnetic intensity depend on the uniformity of the initial magnetization and the magnetic degradation of the individual magnets. The magnetic and the geometric centerline of bar magnets are sometimes misaligned by as much as several degrees.

- The magnets used in single-axis dampers should be attached to the part of the damper that does not move with respect to the spacecraft. This is to assure that the dipole remains balanced for all angular positions of the damper.

- Each set of magnets used in two-axis dampers should be individually balanced. The magnets should be mounted on the intermediate gimbal of the damper to preserve the angular relationship between the two sets of magnets for all angular displacements.

- Materials with the highest possible permeability should be used. All hysteresis rod dampers that were flown prior to 1969 were made of alloy AEM 4750, heat treated in dry hydrogen to achieve the required high permeability. The eddy current rod dampers on GEOS-I used the 4-79 molybdenum-permalloy core sheathed in copper. The 4-79 moly-permalloy has high permeability, low hysteresis, and low remnant magnetism, while copper has high electrical conductivity.

- Magnetic design should be performed in conjunction with extensive laboratory parametric testing, since permanent magnet characteristics are not amenable to theoretical analysis.

(2) Magnetically anchored dampers

Magnetically anchored GGL dampers rely on a strong magnetic dipole to couple the secondary part of the damper with the earth's magnetic field. The effect of a misalignment of the magnetic dipole on the operation of these dampers is small and can be neglected in the damper design.

4.3.3 Magnetic Deadband in Magnetic Hysteresis Dampers

Magnetic hysteresis GGL dampers should have a minimum deadband; i.e., the full damping torque should be reached with a minimum of angular rotation between the primary and the secondary parts of the damper after reversal of motion. Two practices should be considered in hysteresis damper design.

The first practice is that magnetic fringe fields should be minimized by using close spacing of the pole pieces of the magnets and narrow gaps between the pole pieces and the damper vane. This method was used in the hysteresis damper of the ATS-A spacecraft which has less than a 17.4 mrad damping deadband.

The second practice is that variable damping should be provided by "shaping" of the hysteresis material in the damper vane to provide a minimum damping torque in the vicinity of the central position of the damper. As a result, the deadband is reduced in the region of the steady state operation of the damper since deadband is proportional to damping. This method was applied on the ATS-D satellite damper, resulting in a reduction of the effective deadband to 8.5 mrad.

4.3.4 Magnetic Contamination

Every precaution should be taken to avoid magnetic contamination of the damper during and after assembly of the damper on the spacecraft. Investigations of magnetic contamination of diamagnetically suspended spherical dampers indicate that even small magnetic chips, or somewhat larger metallic objects such as washers, can upset the magnetic balance of the damper and cause failures of the type that occurred on the GGTS satellite. The size of the object that can cause critical magnetic contamination depends on the material of the object and on the damper suspension characteristics (ref. 6).

4.4 Radiation Protection

The two principal means of minimizing performance degradation of the damping and suspension elements due to nuclear and cosmic radiation in space are (1) the use of radiation resistant materials and finishes for all exposed components of the damper, and (2) the shielding of damper components (such as viscous damping fluids) that are susceptible to radiation damage. Shielding should be an integral part of the structural design to minimize the weight penalty.

Since the use of GG stabilization on spacecraft containing nuclear reactors may be anticipated at some time in the future, there are additional precautions that can be taken for this case. These precautions would include the location of the damper as far as possible from the nuclear reactor, thus taking advantage of the inverse square law of radiation intensity decrease, the orientation of the damper with a minimum "view angle" toward the radiation source, and the limitation of the exposure time of the damper to the radiation source.

4.5 Space Vacuum

The damping and suspension characteristics of the GGL dampers should be unaffected by the space vacuum during the specified lifetime of the spacecraft. A number of recommended practices resulting from examples of problem areas which have or could have occurred can be suggested. One practice would be to hermetically seal viscous damper fluids to prevent evaporation. For example, the spherical viscous dampers used on the GGTS satellite are sealed by means of electron beam welding of the outer spheres of the damper.

A second practice is to use combinations of materials that are resistant to cold welding for damper components that intermittently come in contact with each other. For example, the boom attachment stubs in the hysteresis damper of the ATS-A and -D satellites are made of anodized aluminum, whereas the damper stops are coated with Teflon.

A third practice is that the use of high vapor pressure materials such as cadmium, zinc, and selenium in dampers should be avoided whenever possible. Numerous experiments have conclusively indicated that evaporation of all other metals in the vacuum of space is insignificant (ref. 21). When the use of high vapor pressure materials cannot be avoided, adequate protection should be provided to prevent redeposition of vaporized material on critical surfaces of the spacecraft. For example, the 0.002-cm-thick cadmium coating of the damper spring on satellite 1963-22A was protected from sublimation by a 0.0002-cm-thick electrodeposited layer of gold.

A fourth practice is that the use of mechanical connections, such as riveting, is preferable to chemical bonding because of the danger of loss of adhesion. If bonding is absolutely necessary, adequate pressure relief should be provided. The failure of several Discoverer flights has been traced to unbonding of the grain of the capsules of the retrorocket motors (ref. 22).

4.6 Weightlessness

The absence of gravity forces during the operation of the GGL damper should be considered in the design of the damper suspension and damping to assure that the damper will perform as planned. None of the means of true zero-g testing in the earth environment, such as using aircraft flying in an arc in a vertical plane and drop-tower testing, is applicable to damper design and development because of the short duration of the zero-g field achievable by these means and the complexity of the tests. Therefore, it is important that provisions to facilitate ground testing, taking into account the weightlessness effects, become an integral part of the damper design whenever possible.

Precautions, depending on the type of suspension, should be taken to minimize change in null position and spring rate. Torsion wires and coil springs should be mounted with sufficient pretension so that the variation in tension due to the weight of the suspended components will be relatively small. Typically, the tension in the torsion wire of the ATS-A damper is 0.9 kg, while the weight of the rotor is 0.1 kg. The change in spring rate of the flexure pivots should be assessed analytically since it inherently depends on the load. In general, external tension loads

reduce the spring rate of flexure pivots while compression loads increase the spring rate. The null position is least stable for certain critical loads that depend on the shape and size of the flexure pivot (refs. 23 and 24). A diamagnetic suspension itself is not affected by gravity. However, determination of the spring rate and the null position requires great care since the diamagnetic forces are very weak relative to the weight of these components.

A second precaution is that viscous damping fluids should not contain gas bubbles since, in the weightless environment, the bubbles do not rise in spite of density differences. Thus, viscous fluids should be vacuum filled and the fluid container should be hermetically sealed.

A third precaution is that the absence of convective movement of fluids due to thermal gradients in the zero-g environment should be taken into account in the thermal design.

4.7 Spacecraft Integration

The electromechanical design should be compatible with the requirements and limitations imposed by the spacecraft system. A number of recommendations, relative to spacecraft integration, are discussed below.

The location of each damper component should be determined by considering the type of damper and the spacecraft configuration. In single part dampers, the damper rod should be attached either to the main spacecraft structure or to the solar panels. In two-part dampers, all components that require electrical power and those requiring magnetic balancing with respect to the spacecraft should be located on that part of the damper that is fastened to the spacecraft. For example, the photocells and the light source of the relative angle sensor and the magnets of the damping element should be attached to the spacecraft, while the mating components should be attached to the damper boom.

The weight and size of the GGL damper should be kept at a minimum consistent with good spacecraft mechanisms design practices. The dampers located at the ends of extendible booms should also be compact and symmetrical to minimize undesirable inertial loads acting on the boom during extension and retraction.

The damper should not in any way interfere with the operation of the spacecraft, the booms, and the experiments, and vice versa. This concept applies to interferences due to physical motion, as well as due to electromagnetic disturbances.

The GGL damper should provide either reliable electrical isolation or reliable electrical conductivity between the main spacecraft structure and the damper booms as required. Electrical isolation should be accomplished by breaking every possible electrical path with isolating materials. The insertion of isolation materials between damper components should not compromise the structural integrity of the damper.

Electrical conductivity across the GGL damper should be accomplished by using either a mechanical suspension which provides a hard wire type connection or a differential transformer which provides inductive electromagnetic coupling. The parameters which should be considered

in the design for electric conductivity across the damper include the amount of current to be transmitted, the number of signals, and the permissible signal distortion.

Power requirements of the GGL damper should not exceed the capabilities of the spacecraft power supply. The damper components that require power for operation include the pyrotechnic caging device, the motor used for caging and recaging the damper in orbit, the relative angle sensor, and electromagnets used for clutching purposes and for generating the magnetic flux in the damper element.

4.8 Launch Environment

GGL damper components should be protected from damage during the launch environment. The methods of protection that should be considered are: (1) permanent attachment to the spacecraft structure, (2) ruggedizing the components and permitting free motion during launch vibrations, and (3) caging, i.e., temporary attachment of movable components and subsequent release in orbit. The following subsections discuss these methods and their limitations in the order of increasing complexity to aid in selection of the simplest method that is compatible with specific design requirements.

4.8.1 Permanent Attachment

Permanent attachment of damper components is the simplest method of protection from the effects of the launch environment and should be employed for all components of single-part dampers and for the components of two-part dampers that are attached to the main body of the spacecraft or to the primary boom. In either case, the design of the permanent attachment should assure that no mechanical stresses are transmitted from the spacecraft structure to the damper and vice versa, and that thermal design requirements are satisfied by providing either adequate heat exchange with other spacecraft components or appropriate thermal isolation from the rest of the spacecraft.

Single-part dampers are attached either to the main spacecraft structure or to the solar panels. The magnetic hysteresis rods used on the TRANSIT series of spacecraft were inserted into nylon cable clamps which were fastened to the main structure of the spacecraft. The rods that were located in solar array panels, such as in satellites 1965-98A, 1966-76A, and 1967-92A, were inserted into aluminum tubes which were capped off at each end with screws. Both of these methods of attachment permit the rods to be inserted just prior to launch of the spacecraft. This is an important scheduling convenience.

The attachment of the components of two-part dampers that do not move relative to the spacecraft should be accomplished by means of standard spacecraft fastening techniques. Particular care should be given to the design of the special fasteners in thermally insulated joints to assure that they have adequate strength.

4.8.2 Ruggedizing

Ruggedizing is the simplest method of protection from the effects of the launch environment for those GGL damper components that cannot be permanently attached to the spacecraft. This method should be used only for small, lightweight damper components. Ruggedizing is accomplished by appropriate selection of material and geometry. The following are examples of the successful applications of this method which should be considered in future design:

(1) The eddy-current spherical dampers, such as used on the GGSE-II and GEOS-I and II spacecraft, have a secondary part that is ruggedized, while the primary part is rigidly attached to the boom. The secondary part consists of a magnet assembly made up of six individual bar magnets joined to a common fitting. Thin plastic tips were bonded to the ends of each of the six magnets to prevent damage to the magnet assembly and the spherical inner surface of the primary part.

(2) The spherical secondary part of the viscous spherical damper, such as used on GGTS and on GGSE-I and III spacecraft, is placed within another sphere and is therefore inherently rugged. The damping action of the fluid contained between the spheres provides further protection from damage.

(3) The "ball" in the viscous ball-in-tube damper used on the OV1-5, 10, and 86 spacecraft was permitted to move freely in the damping fluid within the curved damper tube. The viscosity of the fluid, the small clearance between the ball and the tube, and the favorable geometry precluded damage to these components.

(4) The secondary part of the hysteresis damper for the ATS satellites is suspended on torsion wires which have adequate lateral stiffness for the required positioning during normal operation, yet are sufficiently flexible to allow the secondary part to deflect laterally against protective stops when higher loads are applied.

4.8.3 Caging

Caging should be used only when the methods described in the previous two subsections are not applicable, since it is the most complicated method of protecting GGL damper components from the effects of the launch environment. Caging mechanisms are categorized according to the principle that is used for uncaging, i.e., releasing the connection between the primary and the secondary parts. The four caging principles which have been used are: (1) pyrotechnic, (2) passive, (3) motorized, and (4) encapsulation in a sublimating substance. The selection of a caging principle should be made on the basis of the damper configuration, mass of the damper components, type of suspension, and operational requirements.

(1) Pyrotechnic Caging

The design of pyrotechnic caging devices should preclude any mechanical interference due to fragments of actuators or associated explosive elements. Caging is most commonly accomplished by means of spring-loaded pins and clamps which are restrained by either pyrotechnic actuators, such as pyrotechnic pinpullers or explosive bolts, or a cable which in turn is released by a pyrotechnic

cable cutter. The dampers are caged either internally or externally, depending on whether parts of the damper or the entire damper is restrained. The following are examples of caging devices which illustrate good design practices that should be considered in future designs.

- Four spring-loaded pins restrained by a cable were used to cage the relatively heavy eddy-current damper and damper booms of the combination passive damper on the ATS-A and -D spacecraft. This is an example of internal caging of a damper with a diamagnetic suspension. The cable is cut by means of two redundant squib charges. The spring-loaded pins propel the loose cable away from the damper to assure that it will not interfere with the mechanical operation of the damper (refs. 9 and 5).

- A pair of clamps released by pyrotechnic pin-pullers was used to secure both axes of the GGSE-IV eddy-current damper. This is another relatively heavy damper which illustrates the internal caging of a damper with a torsion wire suspension for one axis and a flexure pivot suspension for the other axis (ref. 25).

- The dampers on the OV1-5 and 10 spacecraft employed coil springs which were elastically stretched, forcing the second part of the damper into a supporting saddle for internal caging. When the damper was released by a pyrotechnic actuator, the springs returned the damper components to their equilibrium positions (refs. 7 and 8).

- Caging of the GGTS spherical dampers is an example of pyrotechnic external caging of dampers that are to be extended away from the spacecraft to become parts of the tip masses. Each of these dampers was set in a cavity in the spacecraft and held securely by a spring-loaded lid. The damper was released by pyrotechnically cutting the cable that held the lid on the cavity. The lid was then jettisoned by springs (refs. 5 and 6).

- Another type of external caging device was used (in addition to internal caging) on the OV1-5, 10, and 86 spacecraft. The entire damper assembly on each of these spacecraft was rigidly attached to an arm which pivoted to position the damper outside the spacecraft. The external caging device was used to hold the arm and damper assembly in place prior to damper assembly extension (refs. 7 and 8).

(2) Passive Caging

Passive damper caging devices are released by the extension of the spacecraft boom. This caging method does not need a separate actuator and associated electrical connections but requires precise machining and adjustment of damper parts. The following are examples of passive caging devices that were successfully used in GG spacecraft and should be considered in future design.

- The OV1-86 damper was passively caged by means of a spider-shaped element which was constrained by the innermost coil of the unextended boom. Full extension of the damper booms released the spring-loaded element and uncaged the damper (refs. 7 and 8).

- The device used to cage the boom tip masses on the DODGE spacecraft consisted of spring fingers which were forced into annular grooves in the tip mass. The tip mass was released by first retracting the boom to pull a plunger from within the spring fingers, which then allowed the fingers to collapse and release the tip mass. This type of device has not been used in conjunction with caging a damper but the concept is applicable to external caging of dampers located at the tip of the boom (ref. 26).

(3) Motorized Caging

Motorized caging devices should be used when, in addition to caging during launch, there is a requirement to recage the damper in orbit. The only motorized device that has been used to date was flown on the DODGE spacecraft. A common electric motor was used for launch caging and for the in-orbit recaging device. The launch caging device consists of a motor-driven cam that released a spring-loaded pin holding a clamp around the secondary part of the damper. The orbital caging device employs another cam which drives a spring-loaded plunger (ref. 27).

(4) Encapsulation in Sublimating Substance

The use of a sublimating material should be considered for caging dampers which consist of very delicate components. Care should be exercised, when subliming materials are used, to assure that no excessive disturbance torques are imparted to the spacecraft due to sublimation.

4.9 Performance Verification

All necessary testing of the GGL damper should be conducted to assure satisfactory performance and flightworthiness under all expected operating conditions. The tests should be performed in accordance with the detailed test specifications for the particular spacecraft in which the damper is used. Determination of the number and precision of the tests should be based on whether the satellite is operational or experimental and whether the results of the measurements are required for operational or diagnostic purposes. For further recommendations on testing of flight hardware, in addition to that provided in this section, the reader is referred to references 28 and 29, where additional references are listed.

4.9.1 Failure Analysis

A failure analysis of all GGL damper components and of other spacecraft systems should be performed to aid in spotting potential problems before they occur and to assure that they do not impair the damper performance under any operating conditions. All possibilities of mechanical interference, undue stress concentration, damage due to the operation of the booms and the experiments, and all other potential sources of failure should be examined (see sect. 2.2.2). Redundant or alternate modes of operation should be provided in the critical areas whenever practical. In addition to a formal failure analysis, all personnel associated with the design and testing of the damper should be constantly alert to possible sources of failure.

When a redesign is made, the new design should be evaluated in the same manner as the original design. The analyst can then verify that the old problems were corrected and that new problems were not introduced (ref. 30).

4.9.2 Ground Testing

(1) Qualification Testing

At least one GGL damper for each new damper design should undergo qualification testing. This series of tests should be repeated each time significant design changes are made. Qualification testing should include tests for the following effects:

- Vibration and shock
- Combined thermal and vacuum
- Electromagnetic interference
- Storage capability
- Humidity resistance of exposed damper

(2) Functional Testing

This type of testing, in contrast to qualification testing, should be performed on each deliverable GGL damper. The following checks and measurements should be performed:

- Damping rate
- Spring rate
- Null position
- Lateral and axial stiffness
- Residual magnetic field
- Weight and size
- Workmanship
- Current and voltage of inflight monitoring instrumentation
- Functioning of auxiliary equipment, including microswitches, potentiometers, etc.

(3) Test Procedures

The following points should be noted when defining the procedures for these two types of ground tests:

- The permissible tolerances for the damping rate, spring rate, and null position should be determined in accordance with the GG systems requirements. Typical tolerances are: (1) -0 to $+20\%$ for the damping rate, (2) $\pm 10\%$ for the spring rate, and (3) ± 1.74 mrad for the null position.

- The damping rate and torsional spring rate can be determined using a common test setup. A typical test method consists of applying a known torque to the damper vane through a calibrated wire and measuring the angle of twist of the wire. The restoring torque of the suspension is determined with the damper magnets removed. The damping torque is determined with the damper magnets in place by torquing the calibrated wire at various angular rates (ref. 10).

- The method of determining the null position should be selected according to the type of damper suspension, as follows:

  (a) The null position of dampers utilizing a torsion wire suspension should be determined by aligning the damper axis with the local vertical. The test should be repeated by inverting the damper to assure that gravity does not affect the adjustment. The method described in item (d), below, can also be used but is more complex.

  (b) The secondary part of the dampers employing a diamagnetic suspension should be supported during the tests on an auxiliary suspension with negligible spring rate.

  (c) The null position for dampers utilizing a flexure pivot suspension should be determined with the secondary part of the damper removed. Care should be taken not to affect the null position when the secondary part is subsequently attached to the flexure pivots (ref. 23).

  (d) The secondary part of the dampers using a coil spring suspension should be floated in a neutrally buoyant solution to determine the null position. Testing should be repeated for two perpendicular orientations of the damper. Care should be taken to clean the damper carefully after testing to prevent corrosion of the damper components. Acetylene tetrabromide diluted with xylene was used to achieve the required fluid density in testing the ball-in-tube dampers on the OV1-5 and OV1-10 satellites.

- Lateral and axial stiffness of the damper suspension should be determined by using precision force measuring devices with dial-indicator readouts.

- Sensitive mapping of the magnetic field around the damper should be performed to assure that the residual magnetic field has been balanced. Recommendations for magnetic field measurements are given in reference 31.

4.9.3 Inflight Monitoring

Monitoring of the performance of the GGL damper in space should provide adequate information to correlate with the performance of the GG stabilization system and the spacecraft experiments, to diagnose the cause of malfunctioning if it occurs, and to improve future GGL damper design. Any, or all, of the following events should be monitored:

Uncaging

Recaging

Damping mode

Level of magnetization of damping magnets

Temperature

Relative angle between the parts of two-part dampers

Customary spacecraft design techniques should be employed in the design of monitoring equipment for the first five events that are listed above. The following points should be noted in the design of relative angle sensors (the sixth event):

(1) The primary considerations in the preliminary design should be accuracy requirements, and range of angular excursions of the GGL damper.

(2) The operation of the sensor should not in any way affect the GG stabilization by imparting reaction torques between the primary and the secondary parts of the damper.

(3) Relative angle sensors should be used in all single-axis dampers and, whenever practical, in multiaxis dampers.

(4) The photoelectric principle has been used for relative angle measurements in all GGL dampers that have been flown to date and should therefore be given primary consideration in future design.

(5) The light source used in the angle sensor should be resistant to shock and vibrations, be designed for long life, and contain redundant filaments.

(6) The heat generated by the light source should not affect the operation of the damper by compromising the thermal design of the damper.

(7) The principal methods that should be considered for producing signals proportional to angular displacement include wedge-shaped apertures such as used on the single-axis dampers on the OVI-5 and -10 spacecraft (see fig. 4), thin fan-shaped members containing slots arranged in binary gray code as used on several experimental satellites, and a near-spherical mirror such as was employed on the "integral" two-axis damper used on the OVI-86 satellite (in contra-distinction to two-axis dampers consisting of two single-axis dampers that are joined together).

(8) Compensation for the lateral motion of the damper components should be provided to assure true angular readout under all operating conditions. This should be accomplished with two signal producing elements, or two sets of photo-detectors, to produce signals that can be averaged.

(9) The type of relative angle sensor should be selected in the preliminary design so that it will become an integral part of the subsequent detailed GGL damper design.

REFERENCES

1. Herzl, G. G. : Passive Gravity-Gradient Libration Dampers. Published by author, Palo Alto, Calif., 1970. This reference also contains a selected bibliography.

2. Mobley, F. F. : Gravity-Gradient Stabilization Results From the DODGE Satellite. AIAA Paper No. 68-460, AIAA 2nd Communications Satellite Systems Conference, San Francisco, Calif., Apr. 8–10, 1968.

3. Pisacane, V. L. ; Pardoe, P. P. ; and Hook, B. J. : Stabilization System Analysis and Performance of the GEOS-A Gravity-Gradient Satellite (Explorer XXIX). J. Spacecraft and Rockets, Vol. 4, No. 12, Dec. 1967.

4. Whisnant, J. M. ; Waszkiewicz, P. R. ; and Pisacane, V. L. : Attitude Performance of the GEOS-II Gravity-Gradient Spacecraft. Symposium on Gravity-Gradient Attitude Stabilization, Aerospace Corp., El Segundo, Calif., Dec. 3–5, 1968.

5. Buerger, E. J. ; and Oxenreider, R. S. : Passive Dampers for Gravity-Gradient Stabilization. Symposium on Gravity-Gradient Attitude Stabilization, El Segundo, Calif., Dec. 3–5, 1968.

6. Gravity-Gradient Test Satellite Fifteen-Month Performance Summary (Revised June 1971), for the period June 16, 1966 to Sept. 28, 1967. Briefing for Aero. and Astro. Coord. Board Unmanned Spacecraft, Washington, D.C., Oct. 11, 1967. General Electric Co., MSD, Valley Forge, Penn.

7. Wrench, E. H. : Implementation of Vertistat, A Gravity Gradient Attitude Control System for Satellite. Paper No. 38, French Astronautical Society, 14th International Astro. Congress, Paris, France, Sept. 25–Oct. 1, 1963.

8. LOOAR Gravity Gradient Stabilization Conference. Los Angeles Office of Aerospace Research, Los Angeles Air Force Station, Los Angeles, Calif., Feb. 15, 1968.

9. Buerger, E. J. : Development of a Passive Damper for a Gravity-Gradient Stabilized Spacecraft. Proceedings of the First Aerospace Mechanisms Symposium, Herzl, G. G. , ed. AD 638916, Department of Commerce, Washington, D. C., May 1966.

10. Reiter, G. S. ; O'Neill, H. P. ; and Alper, J. R. : Magnetic Hysteresis Damping for Gravity-Gradient Stabilization. Symposium on Passive Gravity-Gradient Stabilization, NASA SP-107, 1966.

11. Howard, D.: A Torsion Wire Damping System for the DODGE Satellite. Proceedings of the Third Aerospace Mechanisms Symposium, Herzl, G. G., and Buehler, M. F., eds., JPL TM 33-382, Oct. 1, 1968.

12. Mobley, F. F.; and Fischell, R. E.: Orbital Results From Gravity-Gradient Stabilized Satellites. Symposium on Passive Gravity-Gradient Stabilization, NASA SP-107, 1966.

13. Fischell, R. E. : A System for Passive Gravity-Gradient Stabilization of Earth Satellites. Paper No. 63-326, AIAA Guidance and Control Conference, Mass. Inst. of Tech., Cambridge, Mass. Aug. 12–14, 1963.

14. Smith, E. J. ; Sonett, C. P. ; and Dungey, J. W. : Satellite Observations of the Geomagnetic Field During Storms. J. Geophys. Res. , Vol. 69, No. 13, July 1964, pp. 2669–2688.

15. Connell, G. M. : The Effects of Boom Flutter and Magnetic Dipoles on the Attitude Stability of Gravity-Gradient Satellites. Symposium on Gravity-Gradient Attitude Stabilization, El Segundo, Calif., Dec. 3–5, 1968.

16. Tinling, B. E. ; and Merrick, V. K. : Exploitation of Inertial Coupling in Passive Gravity-Gradient Stabilized Satellites. J. Spacecraft and Rockets, Vol. 1, No. 4, July-Aug. 1964.

17. Pringle, R., Jr.: On the Captive, Stability, and Passive Damping of Artificial Satellites. Ph.D. Thesis, Stanford University, 1964.

18. Babine, T. E. ; and Murray, F. T. : Optimum Viscous Damping of Gravity-Gradient Stabilized Satellite. J. Spacecrat and Rockets, Vol. 5, Feb. 1968.

19. Anon. : "Spring Materials for High Temperature Service." International Nickel Company, Inc., *Spring Design and Application*. N. Chironis, ed., McGraw-Hill, New York, 1961.

20. Gluck, R. : Stability of a Spinning Satellite During Deployment of N Asymmetrical Appendages. TRW Systems, Inc., Redondo Beach, Calif., 1964.

21. Goetzel, C. G. ; Rittenhouse, J. B. ; and Singletary, J. B.: Space Materials Handbook. Addison Wesley, 1964.

22. Simmons, H. : The Soviet Space Program. Space Aeronautics, Dec. 1965.

23. Herzl, G. G.: Mechanical Suspensions for Space Applications. Proceedings of the Third Aerospace Mechanisms Symposium, Herzl, G. G., and Buehler, M. F., eds., JPL TM 33-382, Oct. 1, 1968.

24. Chironis, N. : Flexures Threaten Role of Bearings in Space Industry. Product Engineering, Dec. 16, 1968, pp. 100–103.

25. Johnson, M. E. ; and Marx, S. H. : Development of Gravity-Gradient Dampers. Proceedings of the Third Aerospace Mechanisms Symposium, Herzl, G. G., and Buehler, M. F., eds., JPL TM 33-382, Oct. 1, 1968.

26. Tubular Spacecraft Booms (Extendible, Reel Stored). NASA Space Vehicle Design Criteria Monograph (Guidance and Control), NASA SP-8065, February 1971

27. Herzl, G. G.: Tubular Spacecraft Booms (Extendible, Reel Stored), Vol. 2. Published by author, Palo Alto, Calif., 1970.

28. Theiss, E. C.; Milleaf, H.; and Egan, F.: Handbook of Environmental Engineering. Aeronautical Systems Division, ASD Technical Report No. TR 61-363, Mar. 1962.

29. Haley, J. M.: Mechanical Design—A Test Laboratory Viewpoint. Proceedings of the Third Aerospace Mechanisms Symposium, Herzl, G. G., and Buehler, M. F., eds., JPL TM 33-382, Oct. 1, 1968.

30. Burgess, J. A.: Spotting Trouble Before It Happens. Machine Design, Vol. 42, Sept. 17, 1970, pp. 150–155.

31. Spacecraft Magnetic Torques. NASA Space Vehicle Design Criteria Monograph (Guidance and Control), NASA SP-8018, March 1969.

32. Fischell, R. E.: The TRAAC Satellite. APL Technical Digest, Vol. 1, No. 3, Jan.–Feb. 1962, pp. 2–9.

33. Beal, R. T.; Cudmore, P. H.; Kronke, R. H.; and Wilhelm, P. G. : System Performance and Attitude Sensing of Three Gravity-Gradient Stabilized Satellites. Symposium on Passive Gravity-Gradient Stabilization, NASA SP-107, 1966.

34. Mazur, E. M.; Matteo, D. N.; and Oxenreider, R. S. : Passive Damper Bearing and Gravity-Gradient Rod Development. Symposium on Passive Gravity-Gradient Stabilization, NASA SP-107, 1966.

35. Welden, H.; and Blanchard, D. L.: Dynamical In-Orbit Behaviour of the Radio Astronomy Explorer Satellite. Proceedings of the First Western Space Congress, Vandenberg Scientific & Technical Societies Council, Santa Maria, Calif., Oct. 27–29, 1970.

NASA SPACE VEHICLE DESIGN CRITERIA MONOGRAPHS ISSUED TO DATE

SP-8001	(Structures)	Buffeting During Atmospheric Ascent, revised November 1970
SP-8002	(Structures)	Flight-Loads Measurements During Launch and Exit, December 1964
SP-8003	(Structures)	Flutter, Buzz, and Divergence, July 1964
SP-8004	(Structures)	Panel Flutter, July 1965
SP-8005	(Environment)	Solar Electromagnetic Radiation, revised May 1971
SP-8006	(Structures)	Local Steady Aerodynamic Loads During Launch and Exit, May 1965
SP-8007	(Structures)	Buckling of Thin-Walled Circular Cylinders, revised August 1968
SP-8008	(Structures)	Prelaunch Ground Wind Loads, November 1965
SP-8009	(Structures)	Propellant Slosh Loads, August 1968
SP-8010	(Environment)	Models of Mars Atmosphere (1967), May 1968
SP-8011	(Environment)	Models of Venus Atmosphere (1968), December 1968
SP-8012	(Structures)	Natural Vibration Modal Analysis, September 1968
SP-8013	(Environment)	Meteoroid Environment Model—1969 (Near Earth to Lunar Surface), March 1969
SP-8014	(Structures)	Entry Thermal Protection, August 1968
SP-8015	(Guidance and Control)	Guidance and Navigation for Entry Vehicles, November 1968
SP-8016	(Guidance and Control)	Effects of Structural Flexibility on Spacecraft Control Systems, April 1969
SP-8017	(Environment)	Magnetic Fields—Earth and Extraterrestrial, March 1969
SP-8018	(Guidance and Control)	Spacecraft Magnetic Torques, March 1969
SP-8019	(Structures)	Buckling of Thin-Walled Truncated Cones, September 1968
SP-8020	(Environment)	Mars Surface Models (1968), May 1969
SP-8021	(Environment)	Models of Earth's Atmosphere (120 to 1000 km), May 1969
SP-8022	(Structures)	Staging Loads, February 1969
SP-8023	(Environment)	Lunar Surface Models, May 1969
SP-8024	(Guidance and Control)	Spacecraft Gravitational Torques, May 1969
SP-8025	(Chemical Propulsion)	Solid Rocket Motor Metal Cases, April 1970

SP-8026	(Guidance and Control)	Spacecraft Star Trackers, July 1970
SP-8027	(Guidance and Control)	Spacecraft Radiation Torques, October 1969
SP-8028	(Guidance and Control)	Entry Vehicle Control, November 1969
SP-8029	(Structures)	Aerodynamic and Rocket-Exhaust Heating During Launch and Ascent, May 1969
SP-8030	(Structures)	Transient Loads From Thrust Excitation, February 1969
SP-8031	(Structures)	Slosh Suppression, May 1969
SP-8032	(Structures)	Buckling of Thin-Walled Doubly Curved Shells, August 1969
SP-8033	(Guidance and Control)	Spacecraft Earth Horizon Sensors, December 1969
SP-8034	(Guidance and Control)	Spacecraft Mass Expulsion Torques, December 1969
SP-8035	(Structures)	Wind Loads During Ascent, June 1970
SP-8036	(Guidance and Control)	Effects of Structural Flexibility on Launch Vehicle Control Systems, February 1970
SP-8037	(Environment)	Assessment and Control of Spacecraft Magnetic Fields, September 1970
SP-8038	(Environment)	Meteoroid Environment Model—1970 (Interplanetary and Planetary), October 1970
SP-8040	(Structures)	Fracture Control of Metallic Pressure Vessels, May 1970
SP-8041		Captive-Fired Testing of Solid Rocket Motors, March 1971
SP-8042	(Structures)	Meteoroid Damage Assessment, May 1970
SP-8043	(Structures)	Design Development Testing, May 1970
SP-8044	(Structures)	Qualification Testing, May 1970
SP-8046	(Structures)	Landing Impact Attenuation for Non-Surface-Planing Landers, April 1970
SP-8047	(Guidance and Control)	Spacecraft Sun Sensors, June 1970
SP-8048		Liquid Rocket Engine Turbopump Bearings, March 1971
SP-8049	(Environment)	The Earth's Ionosphere, March 1971
SP-8050	(Structures)	Structural Vibration Prediction, June 1970
SP-8051		Solid Rocket Motor Igniters, March 1971
SP-8053	(Structures)	Nuclear and Space Radiation Effects on Materials, June 1970
SP-8054	(Structures)	Space Radiation Protection, June 1970
SP-8055	(Structures)	Prevention of Coupled Structure-Propulsion Instability (Pogo), October 1970
SP-8056	(Structures)	Flight Separation Mechanisms, October 1970

SP-8057	(Structures)	Structural Design Criteria Applicable to a Space Shuttle, November 1970
SP-8058	(Guidance and Control)	Spacecraft Aerodynamic Torques, January 1971
SP-8059	(Guidance and Control)	Spacecraft Attitude Control During Thrusting Maneuvers, February 1971
SP-8060	(Structures)	Compartment Venting, November 1970
SP-8061	(Structures)	Interaction With Umbilicals and Launch Stand, August 1970
SP-8065	(Guidance and Control)	Tubular Spacecraft Booms (Extendible, Reel Stored), February 1971

NASA-Langley, 1971