NASA
SPACE VEHICLE
DESIGN CRITERIA
(STRUCTURES)

NASA SP-8079

FOR
REFERENCE
ONLY

STRUCTURAL INTERACTION WITH CONTROL SYSTEMS

PROPERTY OF
MARSHALL LIBRARY
A&TS-MS-IL

NOVEMBER 1971

NATIONAL AERONAUTICS AND SPACE ADMINISTRATION

FOREWORD

NASA experience has indicated a need for uniform criteria for the design of space vehicles. Accordingly, criteria are being developed in the following areas of technology:

Environment
Structures
Guidance and Control
Chemical Propulsion

Individual components of this work will be issued as separate monographs as soon as they are completed. A list of all published monographs in this series can be found at the end of this document.

These monographs are to be regarded as *guides* to the formulation of design requirements and specifications by NASA centers and project offices.

This monograph was prepared under the cognizance of the Langley Research Center. The Task Manager was G. W. Jones, Jr. The authors were R. B. Noll and J. Zvara of Aerospace Systems, Incorporated. A number of other individuals assisted in developing the material and reviewing the drafts. In particular, the significant contributions made by the following are hereby acknowledged: R. L. Goldman of Martin Marietta Corporation; B. M. Hall, D. L. Keeton, and W. C. Nowak of McDonnell Douglas Corporation; J. K. Haviland of the University of Virginia; L. D. McTigue and H. M. Voss of The Boeing Company; R. E. Martin of General Dynamics Corporation; G. H. Moore of Lockheed Missiles & Space Company; C. H. Spenny of NASA Electronics Research Center; and D. C. Wade of NASA Manned Spacecraft Center.

NASA plans to update this monograph periodically as appropriate. Comments and recommended changes in the technical content are invited and should be forwarded to the attention of the Design Criteria Office, Langley Research Center, Hampton, Virginia 23365.

November 1971

GUIDE TO THE USE OF THIS MONOGRAPH

The purpose of this monograph is to provide a uniform basis for design of flightworthy structure. It summarizes for use in space vehicle development the significant experience and knowledge accumulated in research, development, and operational programs to date. It can be used to improve consistency in design, efficiency of the design effort, and confidence in the structure. All monographs in this series employ the same basic format – three major sections preceded by a brief INTRODUCTION, Section 1, and complemented by a list of REFERENCES.

The STATE OF THE ART, Section 2, reviews and assesses current design practices and identifies important aspects of the present state of technology. Selected references are cited to supply supporting information. This section serves as a survey of the subject that provides background material and prepares a proper technological base for the CRITERIA and RECOMMENDED PRACTICES.

The CRITERIA, Section 3, state *what* rules, guides, or limitations must be imposed to ensure flightworthiness. The criteria can serve as a checklist for guiding a design or assessing its adequacy.

The RECOMMENDED PRACTICES, Section 4, state *how* to satisfy the criteria. Whenever possible, the best procedure is described; when this cannot be done, appropriate references are suggested. These practices, in conjunction with the criteria, provide guidance to the formulation of requirements for vehicle design and evaluation.

CONTENTS

1. INTRODUCTION 1

2. STATE OF THE ART 3

2.1 Design to Optimize Interaction 7
2.1.1 Structural Design 7
2.1.1.1 Sensor Mounting 8
2.1.1.2 Actuator Linkages and Backup Structure 8
2.1.1.3 Engine Support Structure and Linkage 10
2.1.1.4 Appendages 11
2.1.1.5 Control Surfaces 12
2.1.1.6 Lifting Surfaces 13
2.1.1.7 Other Structural Elements 13
2.1.2 Use of Control System 15
2.1.2.1 Trajectory Design 15
2.1.2.2 Load Control 15
2.1.2.3 Mode Stabilization 16
2.2 Determination of Structural Characteristics 16
2.2.1 Mathematical Model of Structure 16
2.2.1.1 Mass and Stiffness Distribution 18
2.2.1.2 Vibration Modal Data 20
2.2.2 Structural Interaction Analysis 22
2.3 Tests 24
2.3.1 Structural Tests 24
2.3.2 Structure and Control-System Tests 25

3. CRITERIA 27

3.1 Design to Optimize Interaction 27
3.2 Determination of Structural Characteristics 27
3.3 Tests 28

4. RECOMMENDED PRACTICES 29

4.1 Design to Optimize Interaction 29

4.1.1 Structural Design 29
4.1.1.1 Sensor Mounting 30
4.1.1.2 Actuator Linkage and Support Structure 30
4.1.1.3 Engine Support Structure and Linkage 30
4.1.1.4 Appendages 30
4.1.1.5 Control Surfaces 31
4.1.1.6 Lifting Surfaces 31
4.1.1.7 Other Structural Elements 31
4.1.2 Use of Control System 32
4.2 Determination of Structural Characteristics 32
4.2.1 Mathematical Model of Structure 32
4.2.1.1 Mass and Stiffness Distribution 34
4.2.1.2 Vibration Modal Data 35
4.2.2 Structural Interaction Analysis 38
4.3 Tests 39
4.3.1 Structural Tests 39
4.3.2 Structure and Control-System Tests 41

REFERENCES 43

NASA SPACE VEHICLE DESIGN CRITERIA MONOGRAPHS
ISSUED TO DATE 49

STRUCTURAL INTERACTION WITH CONTROL SYSTEMS

1. INTRODUCTION

During design and development of a space vehicle, it is necessary to determine the interrelationship of the structure with both active and passive control systems. Elastic deformation of the vehicle structure, induced by environmental or vehicle-originated forces, can result in perturbations to the control system; conversely, the control system can produce forces which excite the flexible structure.

Properly considered, structure and control-system interactions can potentially result in lower design loads and more efficient structural design. If these interactions are improperly assessed, vehicle performance can be jeopardized, structural components can fail, or the vehicle may be destroyed. Inadequate engineering assessment may result from the use of incorrect or inaccurate structural data for the control-system design, from failure to predict local deformations correctly, and from failure to give proper consideration to the structural contribution to the interaction. Table I in Section 2 lists specific instances in which structural interaction with the control system caused problems.

This monograph assesses the state of the art and presents criteria and recommended practices for determining the structural data and a mathematical structural model of the vehicle needed for accurate prediction of structure and control-system interaction; for design to minimize undesirable interactions between the structure and the control system; and for determining techniques to achieve the maximum desirable interactions and associated structural design benefits. All space vehicles are treated, including launch vehicles, spacecraft, and entry vehicles.

Important structural characteristics which affect the structural model used for structural and control-system interaction analysis are as follows:

- Vehicle vibration mode shapes and frequencies
- Structural damping ratios
- Mass and stiffness distribution of the vehicle

- Major component dynamics
- Local deformation characteristics

Local structural components which the structural designer can readily change to influence the interaction include:

- Effector linkage (an effector is a control-force producing device and its actuator)
- Effector support structure
- Sensor mounting brackets
- Joints
- Appendages

Interactions occur in many ways, depending on the vehicle configuration and mission. An undesired interaction, once identified, can often be alleviated by modification of the control system. In some cases, however, the most expedient and least costly solution is a structural modification, usually in local structure.

Generally, interactions can be anticipated and potential problems solved in the design phase. With a cooperative effort between the structural and control-system designers, an adequate structural model can be established; in particular, this model must specify the uncertainties (tolerances) in the structural characteristics so that the control-system designer can account for them properly. Also, it may be possible to use control-system techniques which will allow the control system to interact with the structure to reduce loads and deflections and thus, in theory, permit a more efficient structural design.

Two monographs (refs. 1 and 2) have been published on the directly related subject of the effects of structural flexibility on control systems of spacecraft and launch vehicles. These monographs treat the subject chiefly from the control-system viewpoint, whereas the present monograph is concerned chiefly with the structural aspects of the subject. The determination of structural modal data, such as needed for the prediction of structure and control-system interactions, is the subject of reference 3. The means of achieving liquid damping required for control-system stability are discussed in the monograph on liquid slosh suppression (ref. 4). Inflight wind loads that affect the interaction are discussed in reference 5. Staging, ignition, and other transient operations that may affect control-system stability are discussed in the monographs on staging loads (ref. 6) and thrust transient loads (ref. 7).

2. STATE OF THE ART

The structural data and the sophistication of the structural model required for accurate prediction of structure and control-system interactions depend on the mission and vehicle configuration and complexity. Generally, current analytical and experimental techniques for determining structural characteristics are adequate for investigating such interactions. When the structural characteristics and mathematical model have been determined, interaction analyses are conducted using a dynamic model developed through one of the following methods: modal coordinate, discrete parameter, hybrid coordinate, or energy sink. For all space vehicles, the interaction analysis is supplemented by simulation studies, component tests, system tests, and, when necessary, flight tests.

Problems caused by interaction usually result from not recognizing the numerous ways the interactions can occur and a failure to analyze the vehicle dynamic system in sufficient depth and detail. The variety of possible interactions is best shown by examples of problems actually experienced. Table I presents examples of structure and control-system interaction in launch vehicles, spacecraft, and entry vehicles to illustrate successful designs that encountered problems initially, space vehicles which experienced interactions during flight, and the design changes incorporated to circumvent the inflight problems. Additional information and references about such interactions can be found in references 1, 2, 8, and 9.

The relationship of the flexible-body dynamics to the elements of an active control system is shown in typical-block-diagram form in figure 1. The controller processes input commands, structural feedback signals, and effector-state signals, and generates outputs to command the effectors (i.e., the control-force-producing devices and their actuators). Actuators drive the control-force devices, such as gimbaled engines or control surfaces, with actuator feedback loops controlling the actuator motions. The control forces affect the vehicle motion and inevitably excite the flexible-body modes. The motion of massive control-force devices, such as engines, control surface, or control-moment gyros, also produces inertia forces which can yield undesirable deflections of the support structure. In addition, external influences such as wind gusts (ref. 5) produce disturbing forces which may excite the vehicle vibration modes. The total motion of the vehicle, both rigid-body and flexible-body, at the location of the sensors is detected by the sensors and fed back to the controller.

There are other interactions between the control system and the structure that may cause difficulty. Actuator and engine dynamics may interact with structural deformations. Mechanical vibration and aeroelastic effects can adversely affect control effectiveness,

TABLE I. – INTERACTION PROBLEMS

Space vehicles	Problem	Cause	Solution
LAUNCH VEHICLES:			
Atlas/Mercury launch MA-2 (Atlas 67D)	Nondestructive control-system limit cycle	Unstable slosh mode where third slosh harmonic coincided with first bending mode giving high structural response	Higher rate/position gyro gain ratio stabilized slosh which reduced interaction.
Little Joe II/Apollo Vehicle 12-51-1	3.5-Hz vibration mode oscillation caused excessive elevon motion	Incorrect payload mass distribution in modal analysis	Control system modified
Saturn IB SA-203	Control system gimbaled engines through three cycles of oscillation prior to holddown release	Structural oscillations excited by ground winds were sensed by control system sensors	Post-flight analysis of structure in cantilever condition with control system active; oscillations within design limits
Thor-Agena A	Potentially destructive 5-Hz oscillation during first-stage flight	Yaw rate gyro sensed first bending mode slope 180 deg out of phase with those predicted by theory	Pivot supports provided at each end of the gyro-mounting bracket.
Saturn V	Pitch control gyro on yaw axis produced significantly larger signals than a backup pitch gyro located on the pitch axis	Under applied dynamic loads, flexible mounting plate bent as a result of instrument unit shell deformation	Gyro relocated; control-system filter networks redesigned.
Atlas 4A	Nondestructive 17-Hz limit-cycle oscillation	Structural feedback from both local and vehicle body deformations	Control systems modified
Saturn IV-B/ Apollo LM	Strong resonance of S-IVB second mode	Large unpredicted deformations of adapter structure sensed by control-system gyros	Relocation of the gyro package to the bottom of the mounting plate
Apollo CSM SC 009 stack	"Tail-wags-dog" vibration effect during ground checkout	Bending vibration data erroneous because of insufficient model	Control system modified after update of structural model
Titan III-B and III-M Stage II	Divergent motion predicted prior to flight	Engine resonance associated with an actuator-load feedback loop	Modify control system auto-pilot and the actuator feed-back loop; increase stiffness of engine backup structure
Little Joe II/Apollo Vehicle 12-51-1	Oscillation of aerodynamic control surfaces upon activation of hydraulic system	Natural frequency of the control surface approximately equal to resonant frequency in the rate-gyro sensor system, causing control-system vibration to be fed back through structure and sensed by gyros	Control system modified
Titan II with Dyna Soar (X-20) payload	Degradation of control stability predicted	Winged payload caused coupling of flexible and rigid-body frequencies, and destabilizing shift of aero-dynamic center of pressure	Large fins mounted aft on Titan II

TABLE I. – INTERACTION PROBLEMS – Continued

Space vehicles	Problem	Cause	Solution
Saturn V	Longitudinal oscillations caused by pogo sensed by lateral control gyros	Stiffness asymmetries of Apollo spacecraft payload coupled longitudinal and lateral modes	Three-dimensional finite-element analysis used to determine coupling; control system insensitive to coupled frequency excited by pogo; pogo instability eliminated by installing bleed-gas accumulator in LO_2 line
SPACECRAFT:			
Explorer I	Dynamic instability	Energy dissipation; bending of whip antennas	Account for energy dissipation; for Explorer II, eliminate antennas
ATS-5	Dynamic instability	Energy dissipation caused by fluid motion in heat pipes attached to cylindrical solar arrays	Account for all sources of energy dissipation
Apollo CSM/LM	Predicted exceedance of strength in docking latches	Uncertainty in prediction of structural parameters; possibility of bending excitation by autopilot	Control system autopilot designed to allow for wide tolerance in structural parameters
Alouette I	Despin	Thermal bending of booms resulted in despin torques on the satellite	Analyze effects of solar radiation on booms; for Alouette II, mounted plates on ends of booms to counteract despin
1963-22A	Attitude errors	Thermal bending of gravitational gradient stabilization booms	Silver plate booms; mount lossy-spring damper on end of boom
RAE	Possibility of dynamic oscillations	Very long booms susceptible to large deflections	Booms constructed with closed cross section; exterior silver plated; boom perforated; interior painted black
OGO III	Limit-cycle oscillations	Control system/boom flexibility interaction	For OGO IV, analyzed for boom damping ratio of zero; control system modified
OGO IV	Limit-cycle oscillations	Thermal flutter	Use closed cross-section boom; for OGO V, used a shorter boom
ENTRY VEHICLES:			
X-15	Limit-cycle oscillations and structural resonance vibrations	Resonance between horizontal-tail bending frequency and stability augmentation system (SAS) frequency	Add notch filter to SAS
M2-F2	Limit-cycle oscillations and structural resonance vibrations	Lightweight control system gyro mount allowed vibration from control surface motion to be sensed	Stiffen gyro mount; modify SAS

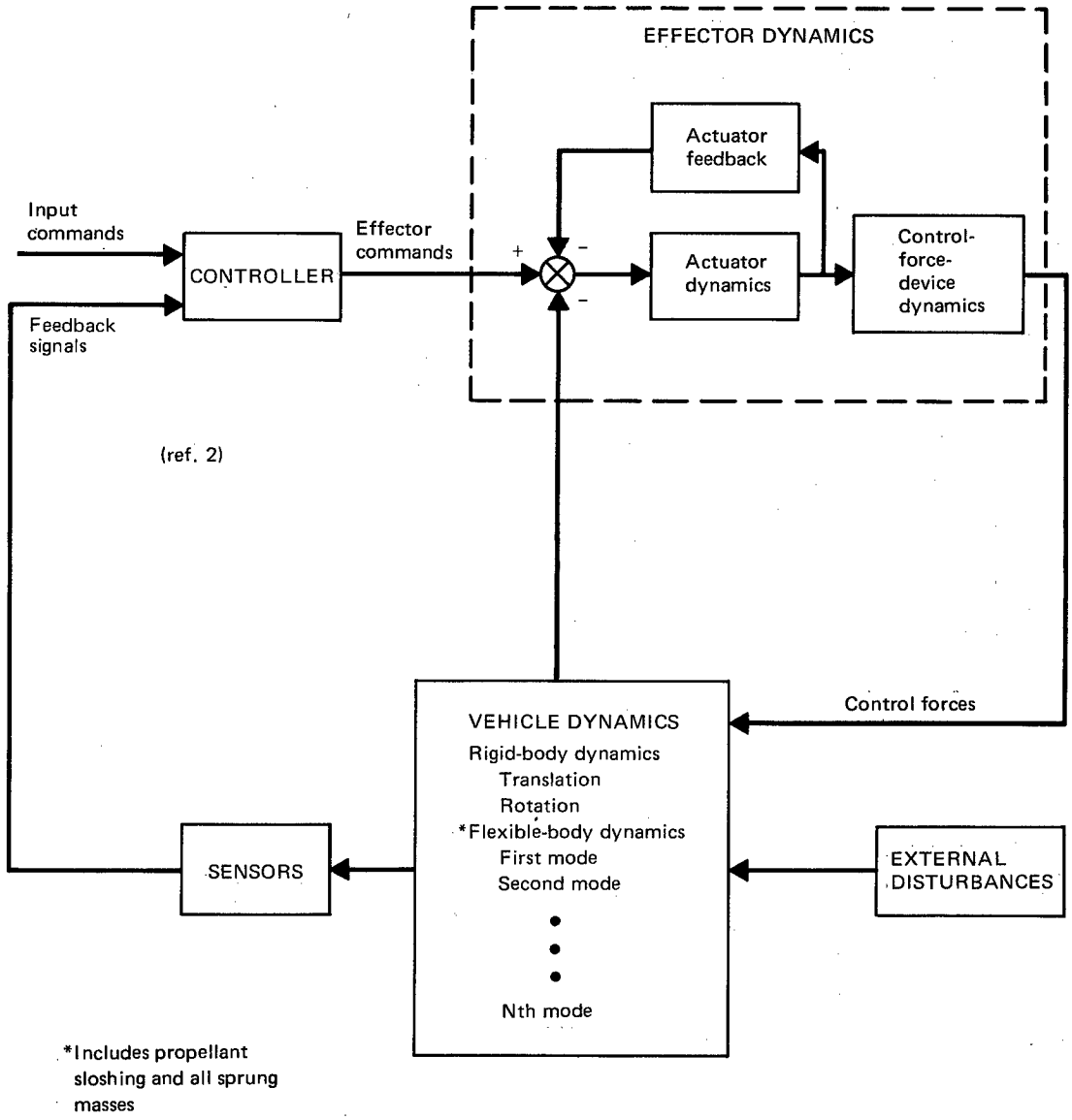

Figure 1. – Block diagram of an active control loop with flexible-body dynamics.

structural integrity, and sensor performance. The sensor mounting structure may exhibit undesired responses due to the local flexibility. Propellant and payloads may also exhibit significant dynamic characteristics which affect structural vibration modes of the vehicle. The interaction is direct for vehicles with passive control systems, such as a gravity-gradient system, in which the structure is an integral part of the control system. In this case, structural deformation or vibration is directly an error or vibration in the control system.

2.1 Design to Optimize Interaction

It is usually impractical to solve interaction problems by changing the gross structural vibration characteristics of the space vehicle because of extreme weight penalties. Thus, if an undesirable interaction is determined, it is usually treated and minimized by modifications to the control system. However, design for rigidity in local sensor, actuator, and control-force structure and for minimum free-play in joints is good design practice for minimizing undesirable interaction and can often be accomplished with little weight penalty. Furthermore, simplicity in design allows accurate prediction of structural characteristics and assists in the design of a more simple and reliable control system.

When there is close coordination and cooperation between the structural and the control-system designers, the structural designer is in a better position to establish reasonable and acceptable structural constraints for effective control-system design. Likewise, any severe structural loading caused by the control system can be considered in the structural design. In many cases, an active control system can be designed to reduce the structural loads and deflections through the proper selection of trajectories and load-relief systems, and by implementation of vibration-mode stabilization systems. Such control-system techniques permit design of more efficient, minimum-weight structure. The optimization of interaction requires an adequate and accurate description of structure to allow for evaluation of vehicle modes, cross-coupling effects, excitation sources and transmission paths, and substructure characteristics (refs. 3 and 10 to 12). An adequate and accurate description of structure is also required to evaluate modal coupling and damping, control-surface reversal, structural stiffness, sensor mount characteristics, flight vibration, and propellant slosh loads (refs. 10 and 13).

Present technology and analytical techniques for evaluating structural interactions with the control system are usually adequate for predicting or alleviating interaction problems, especially for launch vehicles with well documented design techniques. The interaction problem in spacecraft, however, is not as well understood because of the numerous ways the interactions can occur and the wide range of dynamic configurations. Experience with entry vehicles utilizing flexible structure is limited, but aircraft-design techniques are generally applicable, with the added complication of the thermal environment.

2.1.1 Structural Design

The design of structural components and local structure can influence the interaction between the structure and the control system. Stiffness is usually desired and linear structural elements are generally used to simplify the analysis. However, many areas involve nonlinear structure – particularly joints, interfaces, and integral parts of the control system. In spacecraft, nonlinear structures include those which fold out, deploy, or employ locking devices.

These structures are usually linearized either by piecewise linearization or by describing functions (ref. 14). Nonlinearities are usually included if simulations (such as the simulation of actuator dynamics of a spacecraft which performs thrusting maneuvers) are used. Since these areas are difficult to model accurately, their characteristics are generally verified by test.

The following discussion examines several of the more critical components and local structures and presents illustrations which reveal the intricate nature of the interaction problem and its costly consequences.

2.1.1.1 Sensor Mounting

Interaction problems associated with sensor mounting have occurred even though strength and location requirements were met. The problems were caused when excessive flexibility in the sensor mounting resulted in erroneous sensor signals or sensor saturation.

Sensor mounting problems were experienced on the Thor-Agena A and the Saturn V launch vehicles (table I). On the Thor-Agena A, rate gyro outputs were 180 deg out of phase with overall vehicle rotations because of sensor-mount deflections. The sensor mount was modified to prevent the phasing problem. The Saturn V difficulty was caused by deformation of the mounting plate used for the control gyros (fig. 2), resulting in excessive signals in the pitch gyro. The problem was solved by relocating the gyro to a position at a lower corner of the mounting plate where the local distortions were less, and by redesigning the control system filter networks. The feedback problems produced by bending the mounting plate could have been avoided if the pitch and yaw gyros had been mounted separately on the respective neutral axes of the vehicle because the local deformations which are produced by shear along these axes are substantially lower than those produced by the high stresses from bending at the original location.

Structural resonance vibration was encountered during ground tests of the stability augmentation system (SAS) for the M2-F2 lifting body (fig. 3). Vibration from the control-surface motion sensed by the control-system gyros resulted in structural feedback. The structural resonance vibration was attributed to the lightweight construction of the gyro mounting framework. The problem was eliminated by stiffening the gyro platform assembly and by modifying the SAS (ref. 15).

2.1.1.2 Actuator Linkages and Backup Structure

The dynamics of actuators used to effect control-system forces (e.g., gimbaling of an engine or deflection of a control surface) are usually considered in interaction analyses. However, flexibility of the local structure to which the actuation equipment is attached

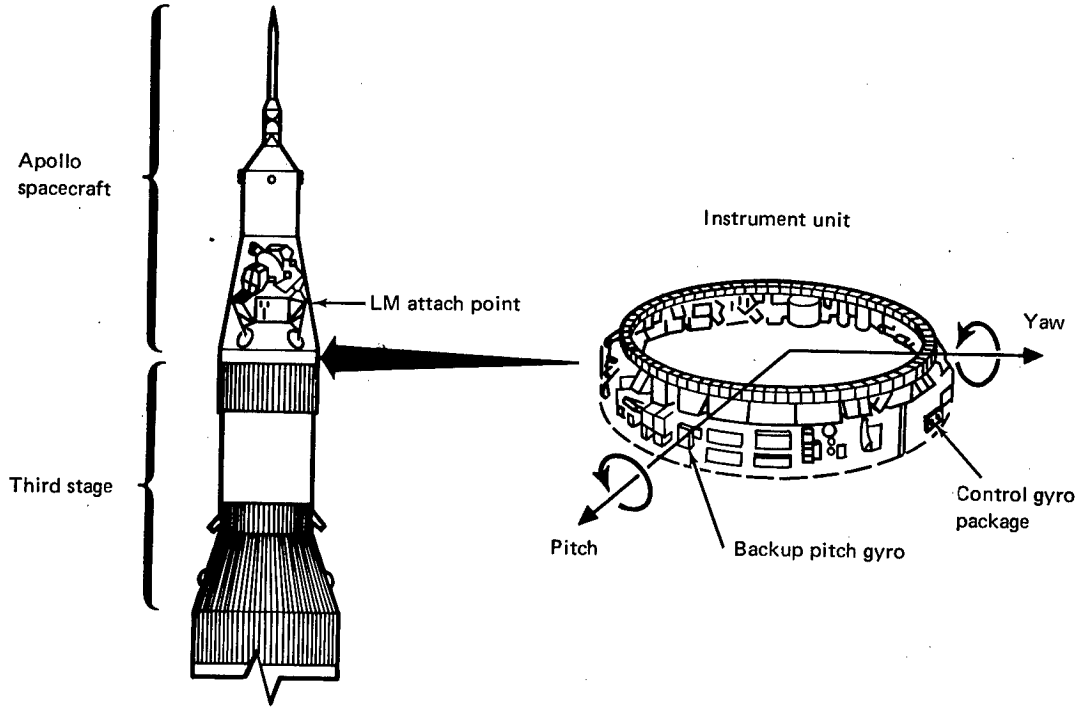

(a) Saturn V instrument unit

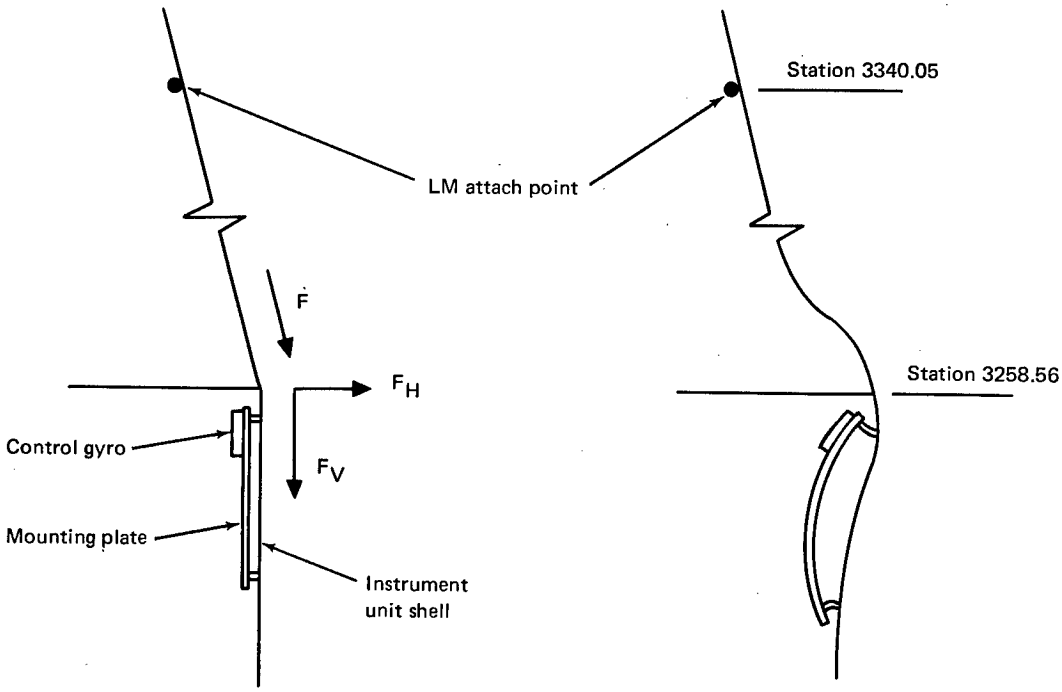

(b) Schematic of Saturn V control gyro mounting and local deformations

Figure 2. – Saturn V local deformation.

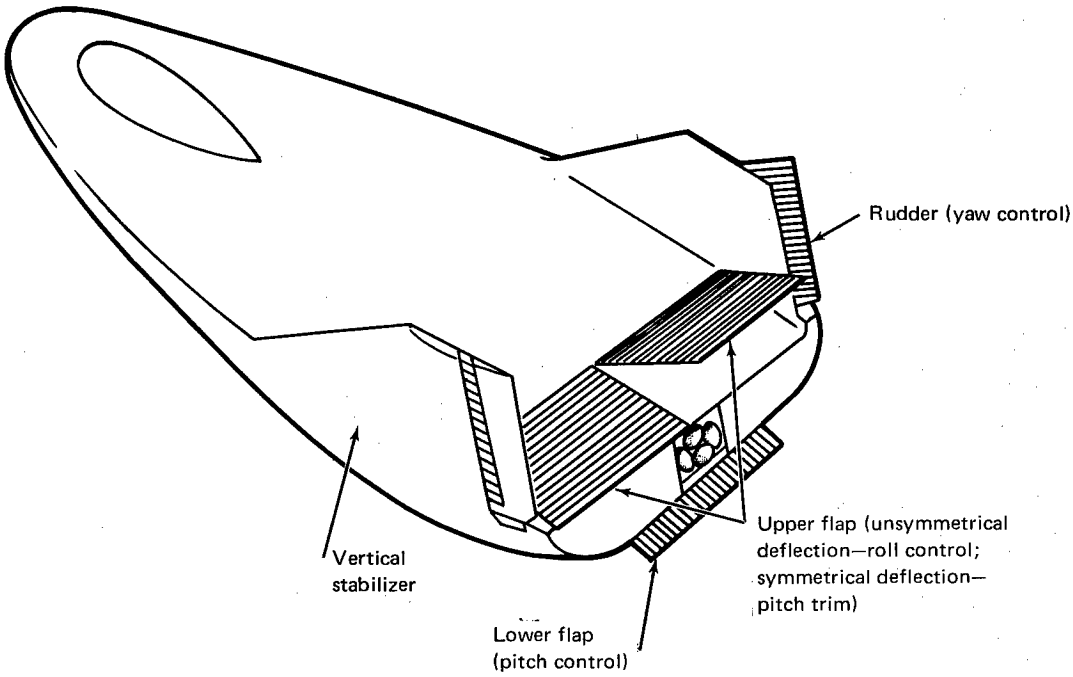

Figure 3. – M2-F2 lifting body.

may adversely affect the actuator dynamics and contribute to an interaction problem. The Atlas 4A launch vehicle (table I) experienced a control-system limit-cycle oscillation which was attributed to gimbal actuator flexibility in conjunction with the third lateral vibration mode. The problem was unsuspected because preflight analysis and simulation studies did not include nonlinear response characteristics of the actuators and support structure involved in this interaction problem.

Actuator dynamics are usually represented by a nonlinear model; hydraulic fluid compressibility, hose restraint, gimbal friction, backup-structure flexibility, and engine flexibility are included if necessary, particularly for the massive engines used on launch vehicles.

2.1.1.3 Engine Support Structure and Linkage

The dynamics of gimbaled engines, used primarily for launch vehicles, are closely related to the actuator dynamics and may cause interaction difficulties. One problem usually revealed by design analyses is that of engine resonance caused by a coincidence of a structural vibration frequency and engine natural frequency (engine natural frequency is a function of engine mass and inertia, engine mount elasticity, and actuating equipment dynamic characteristics). Another form of engine resonance was encountered in analyses

performed on Stage II of the Titan III-B and Titan III-M (table I). The resonance condition involved the fundamental vehicle vibration mode, engine natural frequency, and an actuator-load feedback loop. The situation was corrected by modifying the control-system autopilot and the actuator feedback, and by increasing the stiffness of the engine backup structure.

2.1.1.4 Appendages

Extendible booms have been used on numerous spacecraft for gravity-gradient stabilization, as antennas, and for spin-rate control. These booms are highly flexible, nonlinear structures which are difficult to test, and have contributed to a number of unexpected interaction problems (ref. 1). These problems include despin of Alouette I caused by asymmetrical bending of booms, degraded pointing accuracies of the 1963-22A and 1964-83D satellites caused by static and dynamic bending of gravity-gradient booms, and limit-cycle oscillation of OGO-III and OGO-IV related to vehicle-originated excitation and thermal flutter, respectively.

Analysis of booms is now accomplished with models which incorporate the nonlinear aspects of the structure and its forcing functions. As a result of flight experience, booms have been developed which are stiffer because of a closed tubular cross section, and which are less susceptible to solar radiation effects because of highly reflective exterior surfaces, perforations, and highly absorptive interiors (ref. 16). Typical booms are those used on the Radio Astronomy Explorer (RAE) satellite (ref. 17). Choice of the boom depends on the amount of deflection which can be tolerated. The deflections which can be expected with 100-foot booms having an overlapped cross section are as follows:

- Extendible booms designed to minimize thermal bending (viz., made from screening or with perforations to allow uniform solar heating over the cross section) can be expected to attain tip angular deflections on the order of 1 deg.

- If the boom is continuous, but has an outside silverplated surface polished to a high luster, then peak tip angular deflections of between 2 and 5 deg can be expected.

- If the exterior surface of the boom has comparatively high solar absorptivity, then peak tip angular deflections in excess of 10 deg can be expected.

Appendages other than booms include wire antennas, solar arrays, and parabolic dish antennas. The flexibility inherent in the attachment of the appendage to the vehicle center body is usually considered in the dynamic analyses. For example, the Ranger spacecraft was modeled as two solar arrays and a dish antenna flexibly connected to a

rigid center body. If the appendage itself is a flexible body, then the dynamics of the appendage are considered.

A problem peculiar to spin-stabilized spacecraft is that of energy dissipation by flexible structures. Explorer I (fig. 4) had flexible whip antennas which provided a mechanism for unanticipated energy dissipation through structural damping. Since the spacecraft was initially spin stabilized about a minimum moment-of-inertia axis, the energy loss produced an unstable motion of the vehicle and resulted in the spacecraft finally rotating about the maximum moment-of-inertia axis.

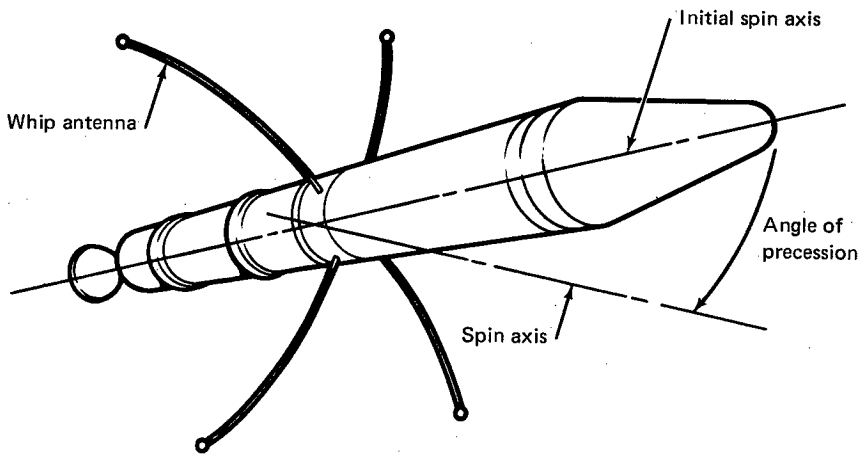

Figure 4. – Explorer I.

2.1.1.5 Control Surfaces

Control surfaces can also exhibit frequencies which cause control-system response. For example, during ground checkout, the Little Joe II/Apollo test vehicle encountered an interaction caused by a coincidence of a control-surface natural frequency and the frequency of the rate-gyro package (table I). Entry vehicles may also exhibit similar problems. A severe inflight vibration was observed on the X-15 rocket research aircraft (fig. 5) where vibration of approximately 13 Hz occurred at 52 000-m (170 000-ft) altitude and a dynamic pressure of 4788 N/m^2 (100 lb/ft^2). The vibration was limited in amplitude because of the rate limit of the control-surface actuator and could be stopped by reducing stability augmentation system (SAS) gains. It was determined that the first bending-mode frequency of the X-15 horizontal tail surfaces was approximately equal to a resonant frequency in the SAS. The problem was rectified by using a notch filter in the SAS (ref. 18).

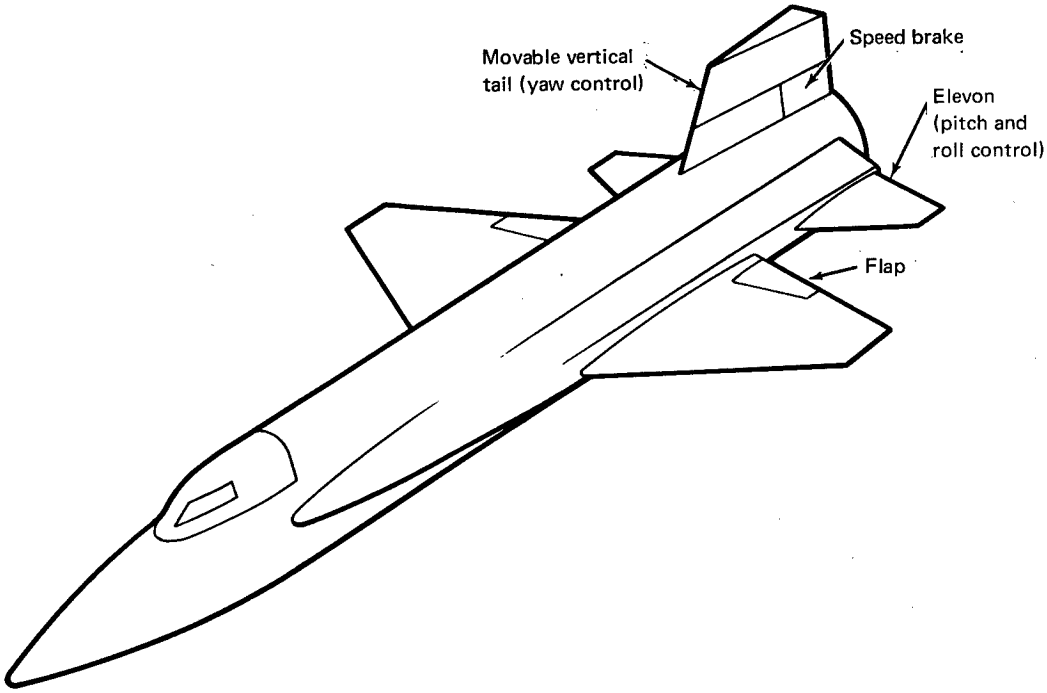

Figure 5. – X-15 rocket research aircraft.

2.1.1.6 Lifting Surfaces

Lifting surfaces such as the wings and tail surfaces of the X-15 aircraft may be used extensively on entry vehicles. These surfaces are susceptible to aeroelastic phenomena including flutter, divergence, control-surface reversal, control-surface buzz, coupled servo flutter, buffeting, and panel flutter. Analytical techniques developed to study aeroelastic problems of aircraft are generally applicable (ref. 10).

2.1.1.7 Other Structural Elements

The presence of joints and other interfaces can radically change the flexibility characteristics of the structure. For this reason, joints are either made as stiff as practical so that the presence of the joint does not adversely affect the overall vehicle stiffness, or the joints are designed with known characteristics which can be accounted for in subsequent analyses. One method of achieving the latter requirement is to design joints which can be effectively analyzed by linear methods or which can be readily linearized. A potentially serious problem which occurred on an early Atlas D AIG vehicle is indicative of the attention which must be paid to joints. Near the end of first-stage flight, an unstable first-mode oscillation started which was terminated by staging just as amplitudes were approaching structural failure. Investigation showed the cause to be excessive free-play in entry-vehicle latches.

Structural integrity of the Apollo Command and Service Module/Lunar Module docked configuration (fig. 6) was a basic concern in the design of the autopilot (table I). The attitude-control torques of the gimbaled service-propulsion-system engine were capable of exciting the bending modes to amplitudes which exceeded the strength of the docking latches. Although the autopilot design was hampered by large uncertainty in the prediction of structural parameters, the autopilot was able to stabilize all spacecraft vibration modes so the structure would not be subjected to excessive dynamic oscillations.

Slop or free-play is sometimes introduced in joints and interfaces to allow for thermal expansion. Free-play, for example, was designed into the flap hinges and actuation connections of the SV-5D Prime Vehicle. However, in this instance, excessive free-play resulted in limit-cycle oscillations of the surface.

In addition to joints, characteristics are determined for secondary structure such as fairings, heat shield, payload supports, and shock mounts which can have significant effect on the mass and stiffness distribution of the vehicle. Whenever practical, these structures are designed using linear methods. Tests are usually conducted to verify the analysis and to determine the structural characteristics if the design is not readily amenable to analysis.

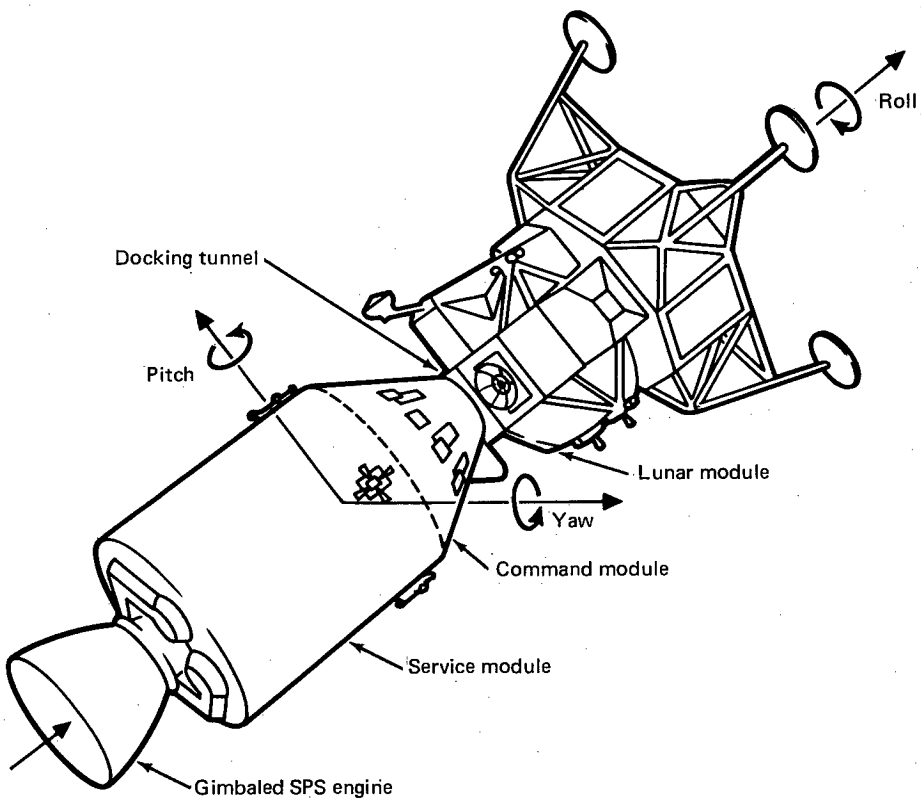

Figure 6. – Apollo command and service module docked with lunar module.

2.1.2 Use of Control System

Structural design can be influenced in a beneficial manner by the control system which can be used to manage loads and to damp structural oscillations. Generally, *launch vehicles* are designed to use the control system to add damping to the modes and to limit the load levels. *Spacecraft* control systems, however, are designed to avoid interaction with the flexible-body modes. To date, *entry vehicles*, like aircraft and spacecraft, have been designed to negate the effects of structural flexibility on the control system. However, load alleviation and mode stabilization techniques, such as developed for large flexible aircraft, are being considered for future entry vehicles – for example, the proposed space shuttle.

2.1.2.1 Trajectory Design

Trajectories or flight paths developed for each vehicle mission are used to determine structural loads for both nominal conditions and dispersions from the nominal caused by environmental factors and manuevers. For example, launch-vehicle trajectories are selected to minimize the dispersion effects of winds and maneuvers on the trajectory (ref. 19); entry-vehicle trajectories consider excursions within the entry corridor and maneuvers during atmospheric flight (ref. 20). Since a vehicle's trajectory is usually determined by the guidance system and is maintained by the control system, flight paths can be chosen (with due regard to other mission requirements) that minimize external loads induced by the environment and vehicle maneuvers, and which do not command control forces that exceed structural limits.

2.1.2.2 Load Control

The type of control law selected and implemented in the control system can reduce the loads imposed on the structure. The control laws are usually selected for rigid-body load considerations and can have a significant effect on structural loading on the vehicle. Control laws are selected for launch vehicles, taking the relative contributions of aerodynamic and thrust forces to the bending moments into consideration (ref. 19). For example, a load-relief control loop using a lateral accelerometer feedback was implemented on the Tital III-C and Saturn IB to reduce the vehicle angle of attack and the associated peak structural loading caused primarily by wind shear. The load control loop of Titan III-C was designed to improve the rigid-body performance; however, in addition to sensing rigid-body accelerations, the accelerometer also sensed structural vibration signals, which necessitated heavy filtering of this channel. This type of load control, using the normal control system, can be quite effective in reducing maximum bending moments (in the vehicle center region) caused primarily by rigid-body and first-mode response. However, bending moments near the ends of the vehicle can be influenced to a greater extent by higher mode response. These moments can be

effectively controlled only by using additional control-force generators and additional sensors such as used on the B-52 (ref. 21) and XB-70 (ref. 22).

2.1.2.3 Mode Stabilization

Modal vibrations of flexible vehicles can cause significant structural loads. Interaction of the control system with the elastic oscillations adds energy to the total system and can eventually cause a control-system instability or structural failure. To prevent such problems, the control system, modified through the application of filters, compensation networks, sensor blending techniques, etc., can be virtually uncoupled from the structural oscillation.

However, regardless of the decoupling, large applied loads can still produce deformation of the structure in its various elastic modes. For this situation, the control system can be designed so that control forces are phased to remove energy from the modes. This method is called phase stabilization and is the principle employed in mode-stabilization control systems. Launch-vehicle control systems, such as those used for the Saturn V (ref. 19), commonly employ both decoupling and mode stabilization. Phase stabilization was employed on the Apollo Command and Service Module/Lunar Module docked configuration to achieve system stability. The experience gained on the B-52 (ref. 21) and XB-70 (ref. 22) mode stabilization systems is being applied to proposed entry vehicles such as the space shuttle.

2.2 Determination of Structural Characteristics

Structural characteristics of the vehicle are usually determined and then used in separate steps: (1) a mathematical model of the structure is developed and analyzed to yield the basic structural information, and (2) either the mathematical model or structural characteristics derived from it are used in conjunction with control-system dynamic equations to evaluate potential interactions.

2.2.1 Mathematical Model of Structure

Selection of a structural model adequate to predict interaction with sufficient accuracy for structural design depends upon the vehicle configuration and the complexity of its dynamics. This model accounts for all significant dynamic phenomena and typically includes higher frequency vibration modes, cross coupling, input data tolerances, flexible internal subsystems, and actuator dynamics. Dynamic loads are investigated to determine the effects of structural amplitude and frequency inputs on equipment, nonstructural systems attached to the structure, and the attitude control system.

Generally, the structural model is made as simple as possible while meeting the

requirements of the control-system designer. In most cases, the model development is an iterative process in which the model is updated during design to satisfy accuracy requirements and to improve correlation with test data. Many space vehicles have at least two orthogonal planes of symmetry for the main load-carrying structure for which a coplanar (two-dimensional) model suffices. However, asymmetries of internal structure and major components may cause coupling of the coplanar modes of the main load-carrying structure. If two of these modes have similar characteristics, even a small asymmetry can produce significant coupling. If coupling of this nature is anticipated, a coupled (three-dimensional) model may be required. This model is also desirable if follow-on analyses can use a three-dimensional vector and if the extra refinement is warranted. A three-dimensional model may also be required if the characteristics of the structure acting in one plane cannot be accurately predicted when restrained to acting in a single plane. Evolution of the mathematical model for the Saturn V launch vehicle described in references 23 and 24 is illustrated in figure 7, showing the increase in complexity to meet dynamic requirements.

Usually, some of the important parameters for evaluating an interaction problem such as vibration mode frequencies, shapes (including slopes at the sensor locations), and damping ratios can be defined during the design of a space vehicle. This type of information is generally sufficient for generating a linear model of the structure for control-system analysis and simulation (ref. 3). The model also includes, where appropriate, characteristics of local structure such as sensor mounting brackets, engine support structure, actuators, and backup structure and joints. The local structure may be involved in dynamic coupling problems such as between actuator and engine dynamics in engine resonance or between lateral and torsional motion, as experienced by booms during thermal flutter. In addition, nonstructural information such as distributed airloads, propellant slosh frequencies, and engine inertias are included with the model, particularly if this information is required to determine the extent of dynamic coupling present. For example, studies using quasi-steady aerodynamics have shown that the aerodynamic forces may couple rigid-body and flexible-body dynamics. The potential of this form of coupling is particularly evident for large launch vehicles in which the lower vibration frequencies approach rigid-body frequencies, and for launch vehicles carrying winged payloads. The result may be a vehicle with resonant frequencies that undergo substantial and irregular variations along the trajectory, tending sometimes to approach one another rather than increase uniformly with time as propellant is expended (ref. 25).

Aerodynamic loads may also couple with the structural characteristics in entry vehicles, especially if wings and tail surfaces are used, resulting in aeroelastic problems similar to those of aircraft (Section 2.1.1.6).

Another example of a related interaction which may affect structure and control-system interaction is that of a sustained oscillation involving the coupling of the space-vehicle

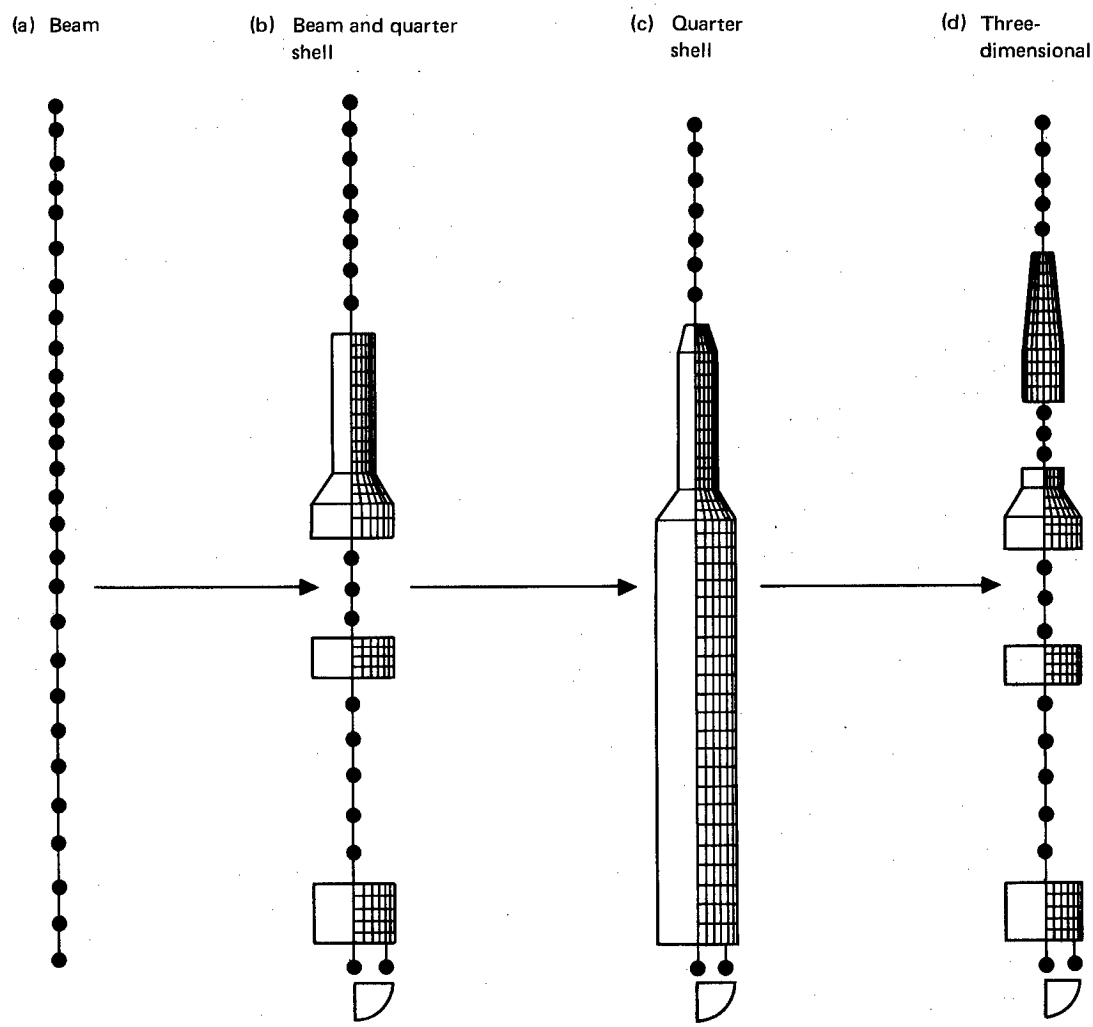

Figure 7. – Saturn V mathematical-model evolution.

longitudinal modes and the propulsion system, commonly referred to as pogo. The phenomenon has been observed on the Thor, Titan II, Atlas, and Saturn V launch vehicles (e.g., refs. 26 and 27). Although pogo is basically divorced from control-system interaction, interaction with control systems may occur if strong coupling of the lateral and longitudinal structural modes is present which can convert pogo oscillations to lateral motion at control-system sensors, such as occurred on the Saturn V (table I and ref. 28).

2.2.1.1 Mass and Stiffness Distribution

The basic methods of formulating mass and stiffness distribution are reviewed in references 3 and 29. Generally, a finite-element approach, using a matrix notation such as the NASTRAN-computer-programmed structural analysis (ref. 30), is used to formulate the stiffness distribution. The mass distribution is usually characterized using the

lumped-mass method, although use of the consistent-mass method (ref. 31) is increasing. Both the mass and stiffness distributions are developed for the same nodal network.

Mass and stiffness representations for launch vehicles and spacecraft may range from a beam arrangement to a complex three-dimensional network. For example, a nonuniform, loaded, lumped-mass beam was adequate for the Atlas series of launch vehicles, whereas a three-dimensional finite-element model was required for the Saturn V vehicle. The Ranger spacecraft was modeled by four masses connected by hinges with linear torsional restraints; the OGO spacecraft was modeled as a lumped-mass system with each antenna represented by a single mass; and the RAE satellite was modeled as a lumped-mass system with each antenna consisting of eight masses. The docked Apollo Command and Service Module and the Lunar Module were analyzed with a three-dimensional finite-element model.

Because of limited experience with flexible entry vehicles, it is difficult to generalize the mass and stiffness formulations best suited to these vehicles. It is to be expected, however, that finite-element techniques will be used extensively, particularly for lifting-body and winged configurations. Consistent-mass techniques will be used as computer programs become available. However, one of the first piloted entry vehicles, the X-15, was designed with a beam model and lumped masses. A finite-element analysis was used for analysis of the X-24 lifting-body vehicle.

Mass distribution is an extremely important consideration for spin-stabilized spacecraft designed to be symmetrical about the spin axis. For dual-spin spacecraft for which symmetry may be difficult or impossible to achieve, such as Intelstat IV, an accurate representation of the mass distribution is needed. Similarly, the center of mass of spacecraft that perform thrusting maneuvers is required to determine torque levels and to analyze the spacecraft stability (ref. 32). In addition, for spacecraft using liquid propellants to develop thrust, such as for Lunar Orbiter and Apollo, the possibility of a "running" center-of-mass condition is investigated. Center-of-mass travel is determined for entry vehicles controlled within the atmosphere.

Special consideration is given to large component masses that may have significant dynamic characteristics of their own such as propellants, gimbaled engines, control surfaces, and payloads. Two methods of considering the dynamics of these masses have been used (ref. 24). In one method a separate model, apart from the basic model for the remainder of the space vehicle, is developed to evaluate the dynamics of the component masses; and then an equivalent lumped-mass representation is coupled to the basic space-vehicle model. In the other method, mass and stiffness characteristics of the components are included directly in the space-vehicle model.

Both methods have been used in analyzing propellant slosh. For the Atlas, Thor, and

X-15, the slosh dynamics were determined separately, whereas they were incorporated directly in the structural model for the Titan vehicles. In initial studies for the Saturn V, the slosh dynamics were included in the structural model; however, later studies determined the slosh and structural dynamic characteristics separately (ref. 24). Most analyses for launch vehicles as well as for the Apollo Command and Service Module have been conducted with the gimbaled engine as a degree of freedom to be computed separately.

Local structure may influence the overall dynamic characteristics or directly affect the control-system equipment; therefore, the mass and stiffness distributions are defined separately for actuator linkages and backup structure, sensor mounting brackets, engine support structure, joints and other interfaces, and integral structural parts of the control system. In addition, for entry vehicles using lifting surfaces such as wings, the torsional characteristics of these surfaces are important. (Local-component effects have been discussed in Section 2.1.1.)

The effects of temperature on structural stiffness are usually included in the analysis to determine structural characteristics. This may be accomplished by applying a constant temperature across an entire section of the vehicle, or by accounting for discrete temperatures and temperature gradients at lumped-mass stations or at node points. Temperature effects are normally included in analyses of launch-vehicle structural dynamics. Launch vehicles are subjected to low temperatures because of the cryogenic propellants and to high temperatures because of inflight aerodynamic heating. Spacecraft are subjected to low temperatures of the space environment but are more susceptible to extreme temperature gradients. Entry vehicles are subjected both to high temperatures and high-temperature gradients caused by aerodynamic heating, particularly on lower surfaces and leading edges.

2.2.1.2 Vibration Modal Data

The generation of vibration modal data, including mode shapes, frequencies, generalized masses, and structural damping ratios, is discussed in references 3, 10 to 12, and 33 to 35. These data may be used in response analyses of linear structure, or for comparison with test data to verify the mathematical model. For vehicles using active control systems, that is, systems incorporating sensors, compensation networks, control logic, actuating devices, and an onboard energy source, it is essential to determine modal frequencies, damping ratios, and the slopes and deflections at sensor locations. If the structure is used as part of a control system which does not use active elements (e.g., the extendible boom of a gravitationally stabilized spacecraft) then data are obtained on its total deflections and damping ratios. For certain spacecraft, energy dissipation due to structural flexibility is of prime importance and vibration modal data are not required (Section 2.1.1.4).

Modal data may be furnished to the control-system designer as tabulated data, transfer functions (if the structure is linear), or modal gain characteristics. Modal gain is defined directly from the dynamic characteristics. For launch vehicles, it is defined as the modal deflection at the engine gimbal, multiplied by the modal slope at the gyro location and divided by the generalized mass (ref. 1, Appendix B, equation B-7). The amount of uncertainty or tolerance in the data is normally obtained by performing a parametric study on a digital or analog computer. From this study, the sensitivity of the structure to variations of parameters such as mass and mass distribution, structural elements, and structural arrangement is determined.

Results of the parametric studies are compared to hardware tests. If the studies become unwieldy, a Monte Carlo simulation of the system is performed in which the values of all system parameters are randomly selected within their tolerance bands. This type of study was used for the Poseidon missile, the Apollo Lunar Module and the Surveyor spacecraft. For the Saturn V, tolerances were obtained directly by comparing the results of full-scale vibration tests with analytical results. The effects of differences in the full-scale test article and the flight vehicle on the tolerances were then estimated.

The tolerances placed on the structural data depend upon the accuracy requirements established for the control system. If these requirements for pointing accuracy, rotational rates, etc., are high, then it may be necessary to update the structural model, and generate special local models to achieve a closer tolerance range on the structural dynamic characteristics. Following this iterative procedure, it may be necessary to modify or redesign the control system to prevent interaction problems within the tolerances provided.

For those methods of structural vibration analysis that depend on modal vibration data, the solution is truncated to include those modes of significant interest to the control system. Selection of the number of modes to be retained in the solution varies considerably with the application. The method of selection is not well defined, and depends primarily on engineering judgment.

The accuracy with which structural dynamic parameters can be predicted is strongly dependent on the model used. For example, the frequencies of the first four vibration modes of the Saturn V launch vehicle during the first-stage boost were predicted within ±4 percent. The modal gains for these modes were predicted within margins ranging from ±3 dB on the first mode to ±8 dB on the fourth mode. For the second-stage boost, frequency prediction error was ±3 percent on the first mode, ±13 percent on the second mode, ±4 percent on the third mode, and ±50 percent on the fourth mode. The model was refined after vibration testing and then the predictions were significantly improved. Prior to test, modal-gain prediction accuracy ranged from ±4 dB on the first mode to ±12 dB on the fourth mode (ref. 36).

Modal characteristics are generally determined independent of time; however, when the vehicle mass characteristics change appreciably during flight, as for launch vehicles, a "time slice" analysis is employed wherein a complete modal analysis of the structure is performed at periodic intervals (ref. 2). For large-scale computerized solutions of launch-vehicle vibration model data, it is common practice to determine the modal data at frequent intervals (such as at 10-second intervals for the uprated Saturn I vehicles). For spacecraft and entry vehicles carrying propellants, modal calculations are performed for various propellant loadings and for significant events such as staging, docking, maximum aerodynamic loading, maximum heating rate, and appendage deployment.

Structural damping is a nonlinear function of amplitude and cannot be calculated. Values for modal damping ratio may be based on past experience, but linearized modal damping estimates are usually based on test measurements. Proportional damping models are usually used; that is, an equivalent viscous damping factor is applied to each mode. Representative values of damping and modal frequencies of launch vehicles are presented in table II.

2.2.2 Structural Interaction Analysis

Consideration of instabilities associated with coupling between the structure and the control system is closely related to the vibration response problem. In most cases the structural model used for response analysis is appropriate for use in the control-system analysis, at least in the lower frequencies.

The structural dynamic model is used to obtain the dynamic equations which together with rigid-body motion describe flexible-vehicle motion. These equations are used together with the control-system equations to describe the total dynamic system. Because of the wide variation in vehicle structural configuration, several methods of modeling the space-vehicle dynamic system have evolved. Four major methods are used in attitude control analysis: energy-sink, discrete-parameter, modal-coordinate, and hybrid-coordinate (ref. 1). Equations of motion for the structural model, whether distributed or discrete, may be formulated by integral or differential equations, or by energy methods (refs. 1, 3, 10, and 12). Solution of the equations is discussed in reference 29.

For some spacecraft, the control system does not contain active control elements; instead, the control functions are performed by an integral part of the structure (e.g., gravity-gradient booms). In this case, analysis of the vibration response of the structural model provides a study of potential interaction. For most space vehicles, however, the control systems are active and are described by a separate model. The forces generated through the control system are forcing functions or a source of energy external to the structure as illustrated in Appendix B of reference 1. The analysis of potential interactions for active systems is determined by control-system stability analyses (refs. 1

TABLE II. – LAUNCH-VEHICLE VIBRATION MODAL DATA (FULLY-LOADED CONFIGURATION)

Vehicle	Closed-loop rigid-body frequency, Hz	Vibration mode	Frequency, Hz (a)	Damping ratio (b)
Atlas/Able–4B	0.40	First	2.7	–
		Second	6.3	–
		Third	12.7	–
Atlas/Agena/OAO	0.40	First	3.6	0.007
		Second	7.2	–
		Third	8.2	0.016
		Fourth	9.5	0.012
		Fifth	15.0	0.012
Atlas/Centaur/ Surveyor	0.42	First	2.0	0.019
		Second	5.2	0.013
		Third	6.9	0.019
Thor/Delta or Agena	0.20	First	2.2	0.007
		Fourth	17.0	0.010
Titan III–C Stage 0	0.25	First	1.8	0.008
		Second	2.9	0.010
		Third	5.4	0.010
		Fourth	6.5	0.015
Upgraded Saturn I (SAD–6) (dynamic test vehicle)		First	1.7	0.008
		Second	3.3	0.009
		Third	4.1	0.014
		Fourth	5.0	0.008
		Fifth	5.6	0.006
		Sixth	7.2	0.007
Upgraded Saturn I (AS–205)	0.15	First	1.1	0.005
		Second	2.2	0.005
		Third	3.8	0.005
		Fourth	5.8	0.005
		Fifth	8.4	0.005
		Sixth	10.0	0.005
Saturn V/Apollo	0.20	First	1.0	0.005
		Second	1.7	0.007
		Third	2.3	0.006
		Fourth	3.0	0.010

Test: Atlas/Agena/OAO, Atlas/Centaur/Surveyor; Estimated: Thor/Delta or Agena, Titan III–C Stage 0; Test: Upgraded Saturn I (SAD–6); Calculated: Upgraded Saturn I (AS–205); Estimated: Upgraded Saturn I (AS–205); Test: Saturn V/Apollo

[a]These frequencies are free-free; test values are corrected from test support conditions.

[b]Damping ratio is the ratio of actual damping to critical damping. Test values are from decay records. Estimated values are extrapolations of test data on similar vehicles.

and 2). Of particular interest to the structural designer are those loads generated by the control system which can affect the structural integrity of the space vehicle. These loads include those imposed by an engine hard-over condition caused by a malfunction; transients due to switching to a redundant control system; engine ignition and other propulsion transients; docking, staging, and flap deflection; control response to winds; control response to guidance commands; and response to control-system-induced

limit-cycle oscillations. In addition, reduction in structural loading such as achieved by load-relief control systems in launch vehicles (ref. 37) and by mode stabilization techniques (ref. 38) can be studied in the simulation of the structure and control-system interaction.

2.3 Tests

Tests are conducted throughout the design and development of every vehicle. They vary in detail and extent with each vehicle but are generally used for one or more of the following purposes:

- Verification of mathematical model
- Determination of vibration modal characteristics
- Establishment of tolerances
- Determination of characteristics of nonlinear structure
- Determination of structural damping
- Verification of interaction analyses

2.3.1 Structural Tests

Generally, full-scale model or prototype test articles are used for verification testing of structural mathematical models. However, subscale models have been used, such as the one-tenth scale model of Saturn V (ref. 24) and the one-fifth scale model of Saturn SA-1 (ref. 39) to develop the mathematical models and to support full-scale testing.

Test and analytical results are compared to establish tolerances. The test data can be repeated only within certain tolerances. For example, results obtained after unstacking and restacking launch vehicle stages may vary. In addition, certain tests may not be repeatable because of such causes as slippage in joints and changes in preloads.

Tests are also used to determine data which cannot be obtained or confirmed through analysis such as data on local structure and joints which may be nonlinear. In many cases, vehicle sections are used as test specimens to determine local structural characteristics. Typical of these are engine gimbal tests for testing the engine and its actuating equipment and backup structure (ref. 40), tests on solar panels, and tests of lifting surfaces.

Both static and dynamic tests are conducted to obtain structural data. Static tests are used to determine the force-deflection characteristics of the structure and may be used to obtain influence coefficients for calculating vibration modal data (ref. 10). However, the influence coefficients are usually not determined if vibration tests are to be conducted. Other tests include environmental testing (e.g., acoustic and thermal), appendage deployment, static balancing and determination of weight, moments of inertia, and center of mass (ref. 41). Dynamic balancing is conducted on many vehicles and is particularly important for spin-stabilized spacecraft.

Ground vibration tests are used successfully to determine the vibration modal characteristics and structural damping of the vehicle. Values of structural damping cannot be calculated and are usually obtained from measurements made on actual vehicle structure (table II). Local structural characteristics may also be investigated by vibration testing. One difficulty in vibration testing is the simulation of inflight free-free modes. Suspension systems of varying types are used such as the spring systems used for Surveyor (ref. 42), Gemini (ref. 43), and Apollo and a hydraulic support used for Saturn V (ref. 24). Electromagnetic shakers are usually used to excite the vehicle. Many of the spacecraft appendages designed for a gravity-free environment are extremely flexible and thereby difficult, if not impossible, to test in a 1-g environment. An example is the testing of the solar arrays of SERT II which required a special test rig (ref. 44). Vibration testing of entry vehicles is accomplished by well-developed aircraft techniques (ref. 10). However, the severe thermal environment is very difficult to simulate and usually tests which include thermal inputs are conducted on segments of the total vehicle.

In addition to modal frequencies, vibration testing is also used to determine shapes and damping ratios, slosh frequencies and damping. Measurements of the characteristics at control-system sensor locations is particularly important.

2.3.2 Structure and Control-System Tests

Dynamic tests are often conducted with the control system operating closed-loop to demonstrate the dynamic performance of the control system. The results are sometimes difficult to evaluate because of the absence of forcing functions present during flight, such as aerodynamics and engine thrust. However, this test has been useful for examining control servo feedback problems on entry vehicles using control surfaces. Flight tests of the space vehicle may be conducted to ensure the absence of undesirable interactions—particularly if the space vehicle is manned. Interactions on launch vehicles are normally inferred from other data obtained during the flight test program. Inflight vibration tests have been conducted on manned spacecraft, namely the docked configurations of Gemini-Agena and Apollo Command and Service Module/Lunar Module. Excitation was provided on Gemini by attitude-control thrusters and on Apollo by the main thruster engine (ref 1). Inflight vibration tests may be conducted on entry

vehicles to verify ground test results; however, this testing on winged vehicles is also conducted to verify the absence of flutter and other undesirable aeroelastic characteristics.

3. CRITERIA

Space-vehicle structure shall not interact with the control system in any manner that is detrimental to the vehicle or its mission performance, or, if the mission is manned, compromise crew safety. Space-vehicle structural design shall optimize structure with respect to structure and control-system interactions. Component structure shall be designed to minimize undesirable interaction. Where feasible, structural design shall incorporate the more efficient structure permitted by control-system techniques which provide maximum benefit from structure and control-system interaction. Structural characteristics shall be determined and a mathematical model of the structure formulated as needed for an analysis to predict structure and control-system interaction adequately. Tests shall be conducted as necessary to determine and verify the structural characteristics used in the analysis and the predicted interactions.

3.1 Design to Optimize Interaction

Critical space-vehicle structure that interacts with the control system shall be designed to minimize undesirable interaction. At least the following structure shall be considered in such design:

- Sensor mounts
- Actuator linkages and backup structure
- Engine support structure and linkages
- Appendages
- Control surfaces
- Lifting surfaces
- Joints
- Payload support structure
- Extendible booms

3.2 Determination of Structural Characteristics

The form and amount of structural data required to support control-system analyses shall be determined. Uncertainty limits (tolerances) of structural characteristics shall be determined and specified.

Pertinent structural characteristics shall be obtained and used to formulate mathematical models with sufficient detail and complexity to describe the structure in terms of the characteristics pertinent to the structure and control-system analyses. The analysis and the mathematical model shall account for the following, as applicable:

- Structural stiffness distribution
- Structural mass distribution
- Structural mode shapes, frequencies, and generalized masses or gain factors
- Structural damping
- Structural and damping nonlinearities
- Distributed aerodynamics
- Temperature distribution and heating rates
- Propellant slosh dynamics
- Local deformations

3.3 Tests

Ground and flight tests shall be conducted to verify estimates and assumptions made during the definition of structural characteristics and to ensure that interaction effects do not impair operation of the dynamic system. Whenever feasible, the ground-test and flight-test data shall be obtained early in the development cycle to benefit design decisions. Structural characteristics which significantly affect the control system shall be verified by test in all instances where nonlinear structure is designed. If the space vehicle is manned, the flight test shall also demonstrate crew safety.

4. RECOMMENDED PRACTICES

Coordination should be established between the structural and control-system groups, and with other technical disciplines including aerodynamics, guidance, propulsion, and testing, so that all may actively participate in selecting the best overall design. Interchange of information and intelligent compromise on all parameters affecting interaction should occur throughout space-vehicle development. To ensure that a proper interface between design groups is maintained, it is recommended that all relevant data be documented in a common data book for present and future reference. This document should be continuously updated to reflect current data.

4.1 Design to Optimize Interaction

The following subsections contain recommended practices which should be followed for design of the critical structural components listed in Section 3.1 and for achieving structural design benefits using control-system techniques to optimize structure and control-system interaction.

The structural-parameter values and their tolerances required for control-system design should be made available to the control-system engineer. To facilitate the determination of the structural parameters and their tolerances, and to lend confidence in their prediction, the structure, where feasible, should be of simple design and be linear or capable of being linearized. The structural data and their estimated accuracy should be reevaluated as the design and test phases progress.

4.1.1 Structural Design

Structure which critically influences interaction between the vehicle structure and control systems should be designed to (1) avoid excessive deflections which could impair control alignment and function, and (2) effect a stabilization between structural and control-system modes. A recommended technique to achieve these goals is to design such structure to be as stiff as practical to minimize deflections and to keep structural frequencies high, relative to the control-system bandpass, with due regard for higher frequency harmonics. The use of linear structural elements is recommended, whenever appropriate, to simplify the analysis and to lend confidence in the results. Adequate structural damping should be provided, particularly for vehicles operating in a space environment where aerodynamic damping is not present, to damp oscillation within time periods deemed reasonable by the control-system designer.

4.1.1.1 Sensor Mounting

To prevent frequency resonance problems, sensor mounting structure should be stiff enough to produce a natural frequency at least twice that of the sensor bandpass, whenever practical. Sensor mounts should be designed to avoid erroneous structural inputs into the sensor signal. When deformation caused by gross strain distribution in the vehicle could result in undesired inputs to sensors mounted in a single gyro package located on one neutral axis, the pitch and yaw gyros should be mounted separately on the respective neutral axes of the vehicle.

4.1.1.2 Actuator Linkage and Support Structure

The interaction analysis should include the dynamics of actuators used for moving control-force equipment, and the dynamics of the actuator linkages and backup structure to which the actuators are attached. A nonlinear model is recommended for the actuator dynamics. Hydraulic fluid compressibility, hose restraint, gimbal friction, support structure flexibility, and engine flexibility should be accounted for as necessary (ref. 45).

4.1.1.3 Engine Support Structure and Linkage

Harmonic resonance of the engine and the structure should be avoided to prevent feedback between the structure and the control system. Engine inertias should be determined to enable calculation of possible detrimental effects to the control system such as "tail-wags-dog" (ref. 46). The engine support structure should be as stiff as practical so that the resonant frequency of a gimbaled engine can be kept above the "tail-wags-dog" frequency.

4.1.1.4 Appendages

Thermal bending of extendible booms caused by solar radiation and pressure should be reduced by using:

- Modified booms which include closed cross sections affording higher torsional rigidity; perforations or wire-mesh construction to achieve rigidity and eliminate extreme temperature gradients across the boom; and black interiors to increase the radiation absorption properties to provide uniform temperature distribution

- Highly reflective exterior surfaces such as silver plate polished to a high luster

- A boom motion damper at the boom root, along its length, or at the boom end mass

- As short a boom as possible

Additional recommended practices for extendible booms are given in reference 16.

The flexibility characteristics of such appendages as antennas and solar panels and their attachments should be considered in dynamic analyses. The possibility of energy dissipation through flexible appendages is important to spin-stabilized spacecraft and should be determined. Specific recommendations for consideration of energy dissipation are given in references 1 and 47.

4.1.1.5 Control Surfaces

Harmonic resonance of control-surface natural frequencies and sensor systems should be avoided to prevent feedback between the structure and the control system. This should be accomplished by close coordination between the structural and control-system designers, which when combined with a cooperative effort can result in optimum compromises between structural and control-system frequency constraints.

4.1.1.6 Lifting Surfaces

Fixed and movable (including engine deflector vanes) lifting surfaces should be investigated for aeroelastic phenomena. Procedures used to determine aircraft aeroelastic characteristics are generally applicable (ref. 10).

Specific recommendations for various aeroelastic problems are contained in the following references:

- Flutter, buzz, and divergence (ref. 48)
- Buffeting (ref. 49)
- Panel flutter (ref. 50)

4.1.1.7 Other Structural Elements

Unless thermal expansion requires the introduction of slop, it is important that primary-structure joints and interfaces be as stiff as possible to minimize their effects on the flexibility of the structure. The design of joints, fairings, and payload support structure should be readily analyzed by linear methods or should be easily linearized.

4.1.2 Use of Control System

The structural analyst should advocate using guidance concepts and control-system techniques and capabilities beneficial in the structural design. Where such concepts and techniques prove feasible, the structural designer should design the structure to the reduced loads estimated by these techniques, if such design is advantageous. These capabilities and techniques include (ref. 19):

- Trajectory design – Design trajectories which minimize disturbing loads.

- Load Control – Maintain satisfactory vehicle bending moment levels by control of aerodynamic forces, moments, and thrust vectors. Relieve structural loads by means of a load-relief control system (ref. 37).

- Mode Stabilization – Reduce control-system response to structural vibration by gain stabilization. Increase damping of vibration modes by phase stabilization or by specially designed control systems. Reduce the possibility of structural feedback and minimize closed-loop effect of engine alignment error by proper selection of control frequencies.

4.2 Determination of Structural Characteristics

Pertinent structural-parameter values and their tolerances should be determined and supplied early in the design for the mathematical model used in analysis of the structure/control-system interaction. To facilitate the analytic determination of structural characteristics and their tolerances, the structure should be designed, where feasible, to be linear or capable of being linearized. For complex and/or nonlinear structure, the parameters and their tolerances should be determined by suitable tests (Section 4.3).

4.2.1 Mathematical Model of Structure

Generally, the model for preliminary design should be the simplest possible model which can be used to evaluate the overall vibration characteristics of the vehicle. A two-dimensional (coplanar) model based on a lumped-mass representation of the vehicle configuration should be used for the initial model, if practical (ref. 2).

As the design progresses, the model should be improved, as necessary, to meet control-system accuracy requirements. A coupled or three-dimensional model should be considered if:

- Secondary asymmetries in internal structure and major components are likely to cause coupling of coplanar modes of the primary structure

- Follow-on analyses need a three-dimensional vector

- Extra refinement can result in significant improvement in accuracy

- Accurate coplanar results cannot be obtained by restraining the structure to act in one plane

Mathematical models should be verified by appropriate tests. If it is determined that some details of the model are not representative, the model should be modified to account for observed differences between structural characteristics determined by test and those used in the model. More complex models should be compared to simpler ones which have been verified because complex models (e.g., three-dimensional finite-element) present computational problems of computer capacity, numerical accuracy, and divergence. It is recommended that highly sophisticated models not be developed until less complex models have been verified for use as a reference. In some cases, it may be expedient to maintain both simple and complex models, using the simple model for interim studies and the complex one for final verification.

The structural model should be capable of determining vibration mode shapes and frequencies (ref. 3). It should have the capability for evaluating the effects of structural damping ratios. For example, the structural dynamic response of booms and other lightly damped structures should be determined for zero damping as well as for nominal damping. Either the verification model or special component models should be capable of allowing the determination of the structural characteristics of sensor mounting brackets, engine support structure, actuators and backup structure, and joints and interfaces.

The coupling effects of large component masses such as propellant dynamics, engine dynamics, and major component dynamics, should be evaluated either in the verification model or by special models such as presented in references 45 and 51 to 53. In particular, the possibility of engine and actuator dynamics coupling with the flexible structure should be checked. Dynamics of these large masses can either be included in the vehicle structural model or modeled separately and their dynamic effects coupled to the basic vehicle in the dynamic response and stability analyses. Although either method is acceptable, care should be exercised in the latter method that the same mass is not included twice.

For control-system purposes, it has been found convenient to model propellants and gimbaled engines separately, to determine their dynamic characteristics, and then couple them to the main vehicle (ref. 2). If effects of a flexible vehicle component on overall dynamics appear to be important, the component dynamics should be added as separate degrees of freedom and a tolerance analysis conducted on the component effects. For example, this procedure simplifies the definition of slosh stability margins. In addition, if

slosh frequencies are changed abruptly, as when the failure of an engine causes a loss of thrust, the propellant dynamics can be reevaluated without having to rerun the entire structural analysis. In analyzing control engines separately, local deformations caused by the engines and actuators will not appear in the low-frequency modes normally used in a stability analysis. Therefore, high-frequency modes should be included in addition to the engine-rotation degree of freedom to produce low-frequency modes of the total system as described in reference 24.

Analysis of launch vehicles with winged or long flexible payloads should account for the coupling effects of steady and unsteady aerodynamics on the flexible and rigid-body modes. Aeroelastic effects in launch vehicles, associated with body deformations from the distribution of normal-force-coefficient slopes over the length of the vehicle at various angles of attack, should be determined. Quasi-steady aerodynamics should be used to obtain the distribution because the reduced frequencies for most of the common space vehicles are approximately 0.1. In the lower supersonic region, Van Dyke Second-Order Hybrid Potential Flow theory (ref. 54) should be used. Where this theory is not applicable (for example, on a blunt nose), shock expansion theory may often be used (ref. 55). If a computer program is not available, load predictions can be based on test data found in reference 56. When integrated force and moment wind-tunnel data are available, they should be compared with corresponding theoretical results; the theoretical distribution should be adjusted to eliminate any discrepancy. Recommendations for considering aeroelastic phenomena in entry vehicles are given in Section 4.1.1.6. If the space vehicle has significant longitudinal-lateral cross coupling, the possibility of a control-system interaction with pogo should be evaluated. Reference 57 presents recommendations for analyzing pogo.

Nonlinear structure should be modeled with piecewise linear elements or by using describing functions (ref. 14). Where neither is practical, the nonlinearities should be investigated in computer simulations using nonlinear equations or incorporating nonlinear hardware.

4.2.1.1 Mass and Stiffness Distribution

The vehicle structure should be sufficiently defined during design to ascertain structural mass distribution. Accuracy requirements for mass and stiffness data should be established as early as possible in the vehicle design procedure. The recommendations presented in reference 3 for determining mass and stiffness distribution should be followed. Inertia and stiffness matrices should be developed identically to improve accuracy (ref. 58).

The mass and stiffness distribution of large component masses such as propellants (ref. 59), gimbaled engines (ref. 45), payloads, and control surfaces should be determined

as applicable. The distribution of mass for spin-stabilized spacecraft should be designed to be symmetrical about the spin axis. Other recommendations related to gyroscopic stiffness and the effects of disturbing torques on spin-stabilized spacecraft are found in references 1, 32, and 47.

The mass and stiffness distribution should include local structure such as sensor mounting brackets, engine support structure, joints, interfaces, payload supports, and extendible booms. If the final verification model is not detailed enough to incorporate local effects, the latter should be evaluated separately.

The effects of temperature on structural stiffness and on slop and free-play in joints, interfaces, and control-system equipment should be investigated. Two methods are usually employed and are recommended: (1) multiplying by a temperature factor the free-free stiffness matrix of a module of the structure that is affected before merging with other modules, and (2) accounting for temperature effects on the modulus of elasticity at each element or node of the structural model. The first method assumes a uniform temperature across the entire module and gives an average effect which is less accurate than the second method. Although more accurate, the second method has the disadvantage of requiring the development of a new stiffness matrix as conditions change (ref. 24). In addition to the effects of discrete temperature, the effects of temperature gradients should be investigated.

4.2.1.2 Vibration Modal Data

Procedures and methods for determining vibration modal data given in references 3, 10 to 12, and 33 to 35 are recommended. Such data, which include mode shapes, modal frequencies, damping ratios, and generalized masses, should be compared to vibration test results to determine the validity of the structural model. The modal data should be furnished in a form compatible with the needs of the control-system designer. This may be as modal data, transfer functions, or modal gains.

Tolerances, which should be placed on the modal data in whatever form they are presented, should be obtained by parametric studies where it is relatively easy to identify critical parameters and to vary those such as mass and mass distribution, structural elements, and structural arrangement. A Monte Carlo simulation is recommended if parametric studies become unwieldy (ref. 60). Where vibration modal data from full-scale vehicle tests are available, tolerances based on a comparison of test and analytical results are recommended. Where more specific accuracy requirements are not available, the general accuracy requirements of reference 3 are recommended for modal data used in stability analysis of control systems.

For those interaction analyses based on the superposition of vibration modes, the number

of modes that should be retained depends on several factors (ref. 24). First, all modes that could interact with the control system should be considered. Particular attention should be given to those frequencies which lie within the control-system bandpass and to those for which the controller shows a significant lag. If vibration-mode frequencies lie close to the controlled rigid-body frequencies, coupling between them should be checked. If possible, the controlled rigid-body frequency should be one-fifth, or less, of the first bending-mode frequency to avoid coupling. Second, modes with shapes similar to the vehicle's quasi-steady deflected shape should be considered to obtain the proper static solutions. Third, consideration should be given to include lightly excited modes which may produce unusually large accelerations at particular vehicle stations. Characteristics should be obtained for as many modes as necessary for an adequate description of the structural dynamics (ref. 61).

Modes for control-system analysis should be selected on the basis of modal gain, with convergence studies included to ensure that no important modes have been omitted. Higher-frequency modes whose amplitudes do not produce significant modal gain may be ignored; however, if modal gain is low because the point under consideration is a node or antinode, slight variations in mode shape may produce significant gains. Both gain and mode shape should be considered before a particular mode is rejected. In addition, the effects of configuration changes on vibration-mode characteristics should be determined. For launch vehicles, the vibration-mode characteristics of the vehicle just prior to liftoff should be determined as well as those for pertinent free-flight events.

When space-vehicle mass, aerodynamic, and temperature characteristics change appreciably during a mission, a "time-slice" analysis should be employed, wherein at periodic intervals pertinent to control-system analysis, a complete modal analysis of the structure is performed. Vehicle parametric values, applicable at the midpoint of each interval, should be used to calculate vibration modes and frequencies. "Time-slice" intervals should be short enough to reduce approximation errors to tolerable limits.

Launch-vehicle modal data should be obtained for each distinct configuration and significant change in loading. For launch vehicles, the data should be determined for at least the following flight events:

- First Stage

  Prior to liftoff

  Liftoff

  Attitude program

Maximum dynamic pressure

Engine shutdown

Separation

- Upper Stages

Ignition

Tower jettison (if applicable)

Nose fairing jettison (if applicable)

Engine shutdown

Separation

For spacecraft, modal data should be evaluated for the following flight events:

- Separation from launch vehicle
- Appendage deployment
- Staging
- Docking
- Engine ignition
- Engine shutdown
- Maneuvering

Modal data for the following flight events of entry vehicles should be determined (ref. 20):

- Engine ignition
- Engine shutdown
- Maneuvering

- Deployment of drag devices
- Maximum dynamic pressure
- Maximum angle of attack
- Maximum heating rate

Values for structural damping ratio may be based on past experience; if possible, linearized modal damping estimates should be obtained from measurements made on the actual vehicle structure excited to expected inflight amplitudes. Experience has shown that the damping ratio should be estimated between 0.005 and 0.01 for the first four to six modes for launch vehicles (table II). A value of 0.01, which is used in aircraft analyses, may be used as an initial value for structural analyses of winged entry vehicles. Because of the diverse configurations of spacecraft, damping ratios should be chosen on the basis of experience with similar vehicles.

4.2.2 Structural Interaction Analysis

The structural dynamic model should be compatible with the control-system model to develop the total-system equations. Four major methods are recommended for use in attitude-control-system analysis: (1) energy-sink, (2) discrete-parameter, (3) modal-coordinate, and (4) hybrid-coordinate.

Solution of the equations of motion to determine the structure's vibration response is reviewed in reference 29. Solution of equations formulated by the modal-coordinate method should be obtained by either the mode-displacement or mode-acceleration method (ref. 12). The latter generally requires fewer modes to achieve the same accuracy.

Computer simulation is recommended for investigating potential interactions between the structure and the control system. Reference 24 provides numerous practical suggestions for computer usage in structural analysis. The complete structural model, including all pertinent coupled effects, should be used in the simulation. The structure and control system should be studied while the model is acted upon by input disturbances such as winds, solar radiation, and engine vibration.

Generally, these simulations constitute an important part of control-system stability studies. However, the structural engineer should work closely with the control-system engineer in simulating various vehicle operating modes such as staging, docking, deployment of appendages, and maneuvering. The simulation is particularly valuable in studying the effects of center-of-mass variations such as those caused by the expenditures of propellants. In launch vehicles, the expenditure is rapid and "time-slice" techniques

should be used to account for variations in modal characteristics caused by mass changes. For entry vehicles and spacecraft using propellant, the expenditures may be relatively slow or even zero for long periods. For these vehicles, it is recommended that the simulation studies investigate at least the following propellant loadings: full; three-quarters, one-half, and one-quarter full; and empty.

The effect of variations in location of the center of mass on thrusting maneuvers should be determined (ref. 32). Variations in the center of mass, relative to the aerodynamic center of pressure on entry vehicles, can affect their stability; these effects should be ascertained. In spacecraft, a dynamic condition (the "running center-of-mass" condition) in the propellant system caused by propellants flowing from one tank to another should be investigated.

The simulation should be used to investigate areas of structural nonlinearity. Temperature effects may also introduce nonlinearities; therefore, the simulation should investigate slop, free-play, or response attributed to temperature.

4.3 Tests

Tests are recommended for:

- Verification of structural mathematical model (Sec. 4.2.1)
- Determination of vibration modal characteristics (Sec. 4.2.1.2)
- Establishment of modal data tolerances (Sec. 4.2.1.2)
- Determination of structural damping (Sec. 4.2.1.2)
- Determination of characteristics of nonlinear structure
- Verification of interaction analyses

4.3.1 Structural Tests

The test program should begin as soon as possible to provide maximum use during the design phase. The tests should be conducted on either full-scale models or prototype vehicles whenever possible except that subscale models may be used in verifying the mathematical model and developing the full-scale test article (refs. 24 and 62). Vehicle subsections should be tested separately, if possible, to verify their characteristics. For launch vehicles, gimbal test stands should be developed early in the program using simulated engine mass and inertia, and mount elasticity to evaluate the dynamic

characteristics of these parameters, and the effects of parametric variations; also, to determine the resonant frequency of the combined engine-actuator-support structure (ref. 40). Other subsection tests which should be conducted, if necessary, include force-deflection tests of spacecraft solar arrays and booms, and wings and tail surfaces on entry vehicles.

Static-influence-coefficient tests to determine the major force-deflection characteristics of the space-vehicle structure are recommended to verify analytically derived characteristics (ref. 3). Similar data should be obtained for critical local areas of the structure that are likely to contribute to interaction problems (e.g., sensor mounts, actuator attachment structure, joints and interfaces). Complete influence-coefficient data are not needed if vibration tests are to be conducted.

Tests to determine structural parameters such as force-deflection characteristics are recommended for all areas which include known nonlinearities. Testing of nonlinear local structure is particularly recommended to verify the structural mathematical model or provide structural characteristics if the structure was not amenable to analysis. Tolerances in the test data should be established.

Static tests, including appendage deployment for spacecraft, environmental testing (especially cold-soak, high-temperature, and acoustic), static balance, and engine alignment should be conducted, as necessary, to verify or obtain structural data required for interaction analyses. The vehicle weight, moments of inertia, and center of mass should also be obtained.

Vibration testing is recommended to determine mode shapes, modal frequencies, and structural damping ratios (refs. 10 and 63 to 65). For small spacecraft having requirements for vibration-table testing, the vibration table and the associated test setup should be used for tests to determine modal data as appropriate. For launch vehicles, entry vehicles, and large spacecraft, excitation by a system of electromagnetic shakers is recommended. To obtain the free-free modes, the vehicle should be suspended or mounted to reproduce the true inflight boundary conditions as closely as possible. Local as well as overall response should be monitored, especially at stations where important control-system instrumentation might be located.

Dynamic testing of spacecraft should be conducted throughout appendage deployment when practical. Certain highly flexible structures such as booms may not be amenable to test; therefore, it is recommended that these structures be tested as subsections. Also, highly flexible appendages should be considered as experiment packages until sufficient flight-test data are available on their response characteristics. Retraction or jettison of the appendages should be considered if serious interaction problems are anticipated. Spin-stabilized spacecraft should be dynamically balanced.

4.3.2 Structure and Control-System Tests

Dynamic structural tests conducted on the ground with the control system operating closed-loop is recommended only if proper precaution has been taken to simulate inflight boundary conditions or to evaluate interactions that could occur under the existing test conditions.

Data from flight tests should be used to verify predictions of structure and control-system interaction. If special inputs or maneuvers are performed in flight to evaluate interactions, provision should be made for post-launch evaluation of the vehicle and to allow inflight adjustments of the control system to negate any interaction effects. Flight data should be compared to ground-test data to verify ground-test procedures. Inflight vibration tests should be conducted for manned spacecraft and entry vehicles. Winged entry vehicles should undergo flight flutter testing.

REFERENCES

1. Anon.: Effects of Structural Flexibility on Spacecraft Control Systems. NASA Space Vehicle Design Criteria (Guidance and Control), NASA SP-8016, 1969.

2. Anon.: Effects of Structural Flexibility on Launch Vehicle Control Systems. NASA Space Vehicle Design Criteria (Guidance and Control), NASA SP-8036, 1970.

3. Anon.: Natural Vibration Modal Analysis. NASA Space Vehicle Design Criteria (Structures), NASA SP-8012, 1968.

4. Anon.: Slosh Suppression. NASA Space Vehicle Design Criteria (Structures), NASA SP-8031, 1969.

5. Anon.: Wind Loads During Ascent. NASA Space Vehicle Design Criteria (Structures), NASA SP-8035, 1970.

6. Anon.: Staging Loads. NASA Space Vehicle Design Criteria (Structures), NASA SP-8022, 1969.

7. Anon.: Transient Loads from Thrust Excitation. NASA Space Vehicle Design Criteria (Structures), NASA SP-8030, 1969.

8. Noll, R. B.; and Spenny, C. H.: Minimizing Spacecraft Structure/Control-System Interaction. In Volume of Technical Papers on Structural Dynamics, AIAA Structural Dynamics and Aeroelasticity Specialist Conference (New Orleans, La.), Apr. 16-17, 1969.

9. Waymeyer, W. K.; and Sporing, R. W.: An Industry Survey on Aeroelastic Control System Instabilities in Aerospace Vehicles. IAS Paper No. 62-47, IAS 30th Annual Meeting (New York, N. Y.), Jan. 22-24, 1962.

10. Bisplinghoff, R. L.; Ashley, H.; and Halfman, R. L.: Aeroelasticity. Addison-Wesley Publishing Co., Inc. (Reading, Mass.), 1955.

11. Thomson, W. T.: Vibration Theory and Applications. Prentice-Hall, Inc. (Englewood Cliffs, N.J.), 1965.

12. Hurty, W. C.; and Rubinstein, M. F.: Dynamics of Structures. Prentice-Hall, Inc. (Englewood Cliffs, N.J.), 1964.

13. Anon.: Propellant Slosh Loads. NASA Space Vehicle Design Criteria (Structures), NASA SP-8009, 1968.

14. Greensite, A. L.: Analysis and Design of Space Vehicle Flight Control Systems, Volume IV. – Nonlinear Systems. NASA CR-823, July 1967.

15. Painter, W. D.; and Kock, B. M.: Operational Experiences and Characteristics of the M2-F2 Lifting Body Flight Control System. NASA TM X-1809, 1969.

16. Anon.: Tubular Spacecraft Booms (Extendible, Reel Stored). NASA Space Vehicle Design Criteria (Guidance and Control), NASA SP-8065, 1971.

17. Angulo, E. D.; and Kamachaitis, W. P.: The Radio Astronomy Explorer 1500-ft-Long Antenna Array. Paper presented at Third Aerospace Mechanisms Symposium, Jet Propulsion Laboratory, May 23-24, 1968.

18. Taylor, L. W., Jr.; and Smith, J. W.: An Analysis of the Limit-Cycle and Structural Resonance Characteristics of the X-15 Stability Augmentation System. NASA TN D-4287, 1967.

19. Lovingood, J. A.; and Geissler, E. D.: Saturn Flight Control Systems. Astronautics and Aeronautics, May 1966, pp. 96-103.

20. Anon.: Structural Design Criteria Applicable to a Space Shuttle. NASA Space Vehicle Design Criteria (Structures), NASA SP-8057, 1971.

21. Burris, P. M.; and Bender, M. A.: Aircraft Load Alleviation and Mode Stabilization (LAMS). AFFDL TR-68-158, Apr. 1969.

22. Wykes, J. H.; Nardi, L. N.; and Mori, A. S.: XB-70 Structural Mode Control System Design and Performance Analyses. NASA CR-1557, 1970.

23. Grimes, R. J.; McTigue, L. D.; Riley, G. F.; and Tilden, D. I.: Advancements in Structural Dynamic Technology Resulting from Saturn Programs – Vol. I. NASA CR-1539, 1970.

24. Grimes, R. J.; McTigue, L. D.; Riley, G. F.; and Tilden, D. I.: Advancements in Structural Dynamic Technology Resulting from Saturn Programs – Vol. II. NASA CR-1540, 1970.

25. Murabayashi, R. J.: Booster Control Problem Associated with Maneuverable Spacecraft – Vol. II: Aeroelastic Effects on Booster Stability. Aerospace Corporation, TOR-0066 (5306)-6-Vol. II, Aug. 1969.

26. Rich, R. L.: Saturn V Pogo and a Solution. Structural Dynamics Volume, AIAA Structural Dynamics and Aeroelasticity Specialist Conference, New Orleans, La., Apr. 16-17, 1969.

27. Goldman, R. L.: Elimination of the Pogo Instability from the Gemini Launch Vehicle. Dynamic Stability of Structures, ed. by George Herrmann. Pergamon Press, Ltd. (Bristol, England), 1967.

28. Ryan, R. S.; et al: A Study of Saturn AS-502 Coupling Longitudinal Structural Vibration and Lateral Bending Response During Boost. AIAA Paper No. 69-58, AIAA 7th Aerospace Sciences Meeting (New York, N. Y.), Jan. 20-22, 1969.

29. Anon.: Structural Vibration Prediction. NASA Space Vehicle Design Criteria (Structures), NASA SP-8050, 1970.

30. McCormick, Caleb W., ed.: NASTRAN User's Manual. NASA SP-222, 1970.

31. Archer, J. S.: Consistent Matrix Formulations for Structural Analysis Using Influence Coefficient Techniques. AIAA Paper No. 64-488, 1964.

32. Anon.: Spacecraft Attitude Control During Thrusting Maneuvers. NASA Space Vehicle Design Criteria (Guidance and Control), NASA SP-8059, 1971.

33. Paddock, G. B.: Dynamic Stability of Space Vehicles; Vol. I – Lateral Vibration Modes. NASA CR-935, 1967.

34. Staley, J. A.: Dynamic Stability of Space Vehicles Vol. II – Determination of Longitudinal Vibration Modes. NASA CR-936, 1967.

35. Gieseke, R.; Schuett, R. and Lukens, D.: Dynamic Stability of Space Vehicles; Vol. III – Torsional Vibration Modes. NASA CR-937, 1967.

36. Anon.: Saturn V Dynamic Test Vehicle Test – Analysis Correlation. The Boeing Co., Document No. D5-15722, Nov. 22, 1967.

37. Harris, R. D.: Analysis and Design of Space Vehicle Flight Control Systems; Vol. XIV – Load Relief. NASA CR-833, 1967.

38. Wykes, J. H.: Load Alleviation and Model Suppression – A Summary of Conceptual Studies. Paper presented at Meeting on Aircraft Response to Turbulence, NASA Langley Research Center, Sept. 24-25, 1968.

39. Mixson, J. S.; Catherine, J. J.; and Arman, A.: Investigation of the Lateral Vibration Characteristics of a 1/5-Scale Model of Saturn SA-1. NASA TN D-1593, 1963.

40. Lukens, D. R.: Dynamic Stability of Space Vehicles; Vol. IV – Full Scale Testing for Flight Control Parameters. NASA CR-938, 1967.

41. Paghis, I.: Franklin, C. A.; and Mar, J.: Alouette I, The First Three Years in Orbit. Defense Research Telecommunications Establishment, DRTE Rept. No. 1159, Part 3, Mar. 1967.

42. Anon.: Flight Projects for the Period September 1 to October 31, 1967, Part V.: Surveyor Project. JPL Space Programs Summary 37-48, Vol. I. Nov. 30, 1967.

43. Daiber, J. R.; and Noonan, V. S.: The Vibration Design, Approval and Acceptance Test Program for the Gemini Spacecraft – Component, Module and Whole Vehicle Testing. The Shock and Vibration Bull. No. 35, Part 2 – Vibration Testing, The Shock and Vibration Information Center, U. S. Naval Research Laboratory, Washington, D. C., Jan. 1966.

44. Swartz, G. E.: Mechanical Systems Design Report, SERT II Solar Array. Lockheed Missiles & Space Co., Rept. No. LMSC A/922891, Apr. 1968.

45. Lukens, D. R.; Schmitt, A. F.; and Broucek, G. T.: Approximate Transfer Functions for Flexible-Booster-And-Autopilot Analysis. U.S. Air Force Rept. No. WADD TR-61-93, Apr. 1961.

46. Gordon, C. K.: Analysis and Synthesis of Flight Control Systems for Flexible Boosters. The Boeing Co., Document No. D5-13085, Mar. 1965.

47. Anon.: Spacecraft Gravitational Torques. NASA Space Vehicle Design Criteria (Guidance and Control), NASA SP-8024, 1969.

48. Anon.: Flutter, Buzz, and Divergence. NASA Space Vehicle Design Criteria (Structures), NASA SP-8003, 1964.

49. Anon.: Buffeting During Atmospheric Ascent. NASA Space Vehicle Design Criteria (Structures), NASA SP-8001, Apr. 1970.

50. Anon.: Panel Flutter. NASA Space Vehicle Design Criteria (Structures), NASA SP-8004, 1965.

51. Swaim, R. L.: A General Theory and Analysis of the Dynamic Stability of Flexible-Bodied Missiles. U.S. Air Force Rept. No. ASD-TDR-62-627, Oct. 1962.

52. Hoke, J. W.: Derivation of the Single-Plane Equations of Motion for the Apollo Vehicle Including the Effects of Propellant Sloshing and Structural Flexibility. North American Rockwell Corp., Space Division, Rept. No. SD 68-132, June 15, 1968.

53. Greensite, A. L.: Analysis and Design of Space Vehicle Flight Control Systems; Vol. XV – Elastic Body Equations. NASA CR-834, 1967.

54. Van Dyke, M. D.: A Study of Second-Order Supersonic Flow Theory. NACA Rept. No. 1081, 1952.

55. Lavender, R. E.: Second-Order and Hybrid Supersonic Flow Theories with Modifications and a Detailed Computational Procedure. Ordnance Missile Laboratories Report 6R1P, Feb. 15, 1954. (PDL 36,647).

56. Syvertson, C. A.; and Dennis, D. H.: A Second-Order Shock-Expansion Method Applicable to Bodies of Revolution Near Zero Lift. NACA Rept. No. 1328, 1957. (Superseded NACA TN 3527).

57. Anon.: Prevention of Coupled Structure-Propulsion Instability (Pogo). NASA Space Vehicle Design Criteria (Structures), NASA SP-8055, 1970.

58. Archer, J.: Consistent Mass Matrix for Distributed Mass Systems. J. of Struc. Div., ASCE, vol. 89, Aug. 1963.

59. Fontenot, L. L.: Dynamic Stability of Space Vehicles; Vol. VII – The Dynamics of Liquids in Fixed and Moving Containers. NASA CR-941, 1968.

60. Halton, J. H.: Retrospective and Prospective Survey of the Monte Carlo Method. University of Wisconsin, Computer Sciences Tech. Rept. No. 13, Feb. 1968.

61. Hurty, W. C.: A Criterion for Selecting Realistic Natural Modes of a Structure. JPL Tech. Memo. No. 33-364, Nov. 1, 1967.

62. Wissman, J. W.: Dynamic Stability of Space Vehicles – Structural Dynamics Model Testing. NASA CR-1195, 1968.

63. Lukens, D. R.; et al: Dynamic Stability of Space Vehicles; Vol. VI – Full Scale Dynamic Testing for Mode Determination. NASA CR-940, 1967.

64. Eggleston, D. M.: Dynamic Stability of Space Vehicles; Vol. XIV – Testing for Booster Propellant Sloshing Parameters. NASA CR-948, 1968.

65. Lukens, D. R.: Dynamic Stability for Space Vehicles; Vol. V – Impedance Testing for Flight Control Parameters. NASA CR-939, 1967.

NASA SPACE VEHICLE DESIGN CRITERIA MONOGRAPHS ISSUED TO DATE

SP-8001	(Structures)	Buffeting During Atmospheric Ascent, May 1964 – Revised November 1970
SP-8002	(Structures)	Flight-Loads Measurements During Launch and Exit, December 1964
SP-8003	(Structures)	Flutter, Buzz, and Divergence, July, 1964
SP-8004	(Structures)	Panel Flutter, July 1964
SP-8005	(Environment)	Solar Electromagnetic Radiation, June 1965 – Revised May 1971
SP-8006	(Structures)	Local Steady Aerodynamic Loads During Launch and Exit, May 1965
SP-8007	(Structures)	Buckling of Thin-Walled Circular Cylinders, September 1965 – Revised August 1968
SP-8008	(Structures)	Prelaunch Ground Wind Loads, November 1965
SP-8009	(Structures)	Propellant Slosh Loads, August 1968
SP-8010	(Environment)	Models of Mars Atmosphere (1967), May 1968
SP-8011	(Environment)	Models of Venus Atmosphere (1968), December 1968
SP-8012	(Structures)	Natural Vibration Modal Analysis, September 1968
SP-8013	(Environment)	Meteoroid Environment Model – 1969 [Near Earth to Lunar Surface], March 1969
SP-8014	(Structures)	Entry Thermal Protection, August 1968
SP-8015	(Guidance and Control)	Guidance and Navigation for Entry Vehicles, November 1968
SP-8016	(Guidance and Control)	Effects of Structural Flexibility on Spacecraft Control Systems, April 1969
SP-8017	(Environment)	Magnetic Fields – Earth and Extraterrestrial, March 1969
SP-8018	(Guidance and Control)	Spacecraft Magnetic Torques, March 1969
SP-8019	(Structures)	Buckling of Thin-Walled Truncated Cones, September 1968
SP-8020	(Environment)	Mars Surface Models (1968), May 1969
SP-8021	(Environment)	Models of Earth's Atmosphere (120 to 1000 km), May 1969
SP-8022	(Structures)	Staging Loads, February 1969
SP-8023	(Environment)	Lunar Surface Models, May 1969

SP-8024	(Guidance and Control)	Spacecraft Gravitational Torques, May 1969
SP-8025	(Chemical Propulsion)	Solid Rocket Motor Metal Cases, April 1970
SP-8026	(Guidance and Control)	Spacecraft Star Trackers, July 1970
SP-8027	(Guidance and Control)	Spacecraft Radiation Torques, October 1969
SP-8028	(Guidance and Control)	Entry Vehicle Control, November 1969
SP-8029	(Structures)	Aerodynamic and Rocket-Exhaust Heating During Launch and Ascent, May 1969
SP-8030	(Structures)	Transient Loads from Thrust Excitation, February 1969
SP-8031	(Structures)	Slosh Suppression, May 1969
SP-8032	(Structures)	Buckling of Thin-Walled Doubly Curved Shells, August 1969
SP-8033	(Guidance and Control)	Spacecraft Earth Horizon Sensors, December 1969
SP-8034	(Guidance and Control)	Spacecraft Mass Expulsion Torques, December 1969
SP-8035	(Structures)	Wind Loads During Ascent, June 1970
SP-8036	(Guidance and Control)	Effects of Structural Flexibility on Launch Vehicle Control Systems, February 1970
SP-8037	(Environment)	Assessment and Control of Spacecraft Magnetic Fields, September 1970
SP-8038	(Environment)	Meteoroid Environment Model – 1970 (Interplanetary and Planetary), October 1970
SP-8040	(Structures)	Fracture Control of Metallic Pressure Vessels, May 1970
SP-8041	(Chemical Propulsion)	Captive-Fired Testing of Solid Rocket Motors, March 1971
SP-8042	(Structures)	Meteoroid Damage Assessment, May 1970
SP-8043	(Structures)	Design-Development Testing, May 1970
SP-8044	(Structures)	Qualification Testing, May 1970
SP-8045	(Structures)	Acceptance Testing, April 1970
SP-8046	(Structures)	Landing Impact Attenuation for Non-Surface-Planing Landers, April 1970
SP-8047	(Guidance and Control)	Spacecraft Sun Sensors, June 1970
SP-8048	(Chemical Propulsion)	Liquid Rocket Engine Turbopump Bearings, March 1971

SP-8049	(Environment)	The Earth's Ionosphere, March 1971
SP-8050	(Structures)	Structural Vibration Prediction, June 1970
SP-8051	(Chemical Propulsion)	Solid Rocket Motor Igniters, March 1971
SP-8052	(Chemical Propulsion)	Liquid Rocket Engine Turbopump Inducers, May 1971
SP-8053	(Structures)	Nuclear and Space Radiation Effects on Materials, June 1970
SP-8054	(Structures)	Space Radiation Protection, June 1970
SP-8055	(Structures)	Prevention of Coupled Structure-Propulsion Instability (Pogo), October 1970
SP-8056	(Structures)	Flight Separation Mechanisms, October 1970
SP-8057	(Structures)	Structural Design Criteria Applicable to a Space Shuttle, January 1971
SP-8058	(Guidance and Control)	Spacecraft Aerodynamic Torques, January 1971
SP-8059	(Guidance and Control)	Spacecraft Attitude Control During Thrusting Maneuvers, February 1971
SP-8060	(Structures)	Compartment Venting, November 1970
SP-8061	(Structures)	Interaction with Umbilicals and Launch Stand, August 1970
SP-8062	(Structures)	Entry Gasdynamic Heating, January 1971
SP-8063	(Structures)	Lubrication, Friction, and Wear, June 1971
SP-8065	(Guidance and Control)	Tubular Spacecraft Booms (Extendible, Reel Stored), February 1971
SP-8066	(Structures)	Deployable Aerodynamic Deceleration Systems, June 1971
SP-8067	(Environment)	Earth Albedo and Emitted Radiation, July 1971
SP-8068	(Structures)	Buckling Strength of Structural Plates, June 1971
SP-8070	(Guidance and Control)	Spaceborne Digital Computer Systems, March 1971
SP-8071	(Guidance and Control)	Passive Gravity-Gradient Libration Dampers, February 1971
SP-8072	(Structures)	Acoustic Loads Generated by the Propulsion System, June 1971
SP-8074	(Guidance and Control)	Spacecraft Solar Cell Arrays, May 1971
SP-8077	(Structures)	Transportation and Handling Loads, September 1971
SP-8079	(Structures)	Structural Interaction With Control Systems, November 1971

NASA-Langley, 1972