NASA
SPACE VEHICLE
DESIGN CRITERIA
(CHEMICAL PROPULSION)

NASA SP-8081

PROPERTY OF
MARSHALL LIBRARY
A&TS-MS-IL

LIQUID PROPELLANT GAS GENERATORS

MARCH 1972

NATIONAL AERONAUTICS AND SPACE ADMINISTRATION

FOREWORD

NASA experience has indicated a need for uniform criteria for the design of space vehicles. Accordingly, criteria are being developed in the following areas of technology:

Environment
Structures
Guidance and Control
Chemical Propulsion

Individual components of this work will be issued as separate monographs as soon as they are completed. This document, part of the series on Chemical Propulsion, is one such monograph. A list of all monographs issued prior to this one can be found on the final pages of this document.

These monographs are to be regarded as guides to design and not as NASA requirements, except as may be specified in formal project specifications. It is expected, however, that these documents, revised as experience may indicate to be desirable, eventually will provide uniform design practices for NASA space vehicles.

This monograph, "Liquid Propellant Gas Generators," was prepared under the direction of Howard W. Douglass, Chief, Design Criteria Office, Lewis Research Center; project management was by Harold W. Schmidt and Lionel Levinson. The monograph was written by Howard C. Zehetner of Rocketdyne Division, North American Rockwell Corporation, and was edited by Russell B. Keller, Jr. of Lewis. To assure technical accuracy of this document, scientists and engineers throughout the technical community participated in interviews, consultations, and critical review of the text. In particular, Jackson I. Ito, Aerojet Liquid Rocket Company; H. Joseph Loftus, Bell Aerospace Company; and William K. Tabata of the Lewis Research Center individually and collectively reviewed the text in detail.

Comments concerning the technical content of this monograph will be welcomed by the National Aeronautics and Space Administration, Lewis Research Center (Design Criteria Office), Cleveland, Ohio 44135.

March 1972

For sale by the National Technical Information Service
Springfield, Virginia 22151 – Price $3.00

GUIDE TO THE USE OF THIS MONOGRAPH

The purpose of this monograph is to organize and present, for effective use in design, the significant experience and knowledge accumulated in development and operational programs to date. It reviews and assesses current design practices, and from them establishes firm guidance for achieving greater consistency in design, increased reliability in the end product, and greater efficiency in the design effort. The monograph is organized into two major sections that are preceded by a brief introduction and complemented by a set of references.

The State of the Art, section 2, reviews and discusses the total design problem, and identifies which design elements are involved in successful design. It describes succinctly the current technology pertaining to these elements. When detailed information is required, the best available references are cited. This section serves as a survey of the subject that provides background material and prepares a proper technological base for the *Design Criteria* and Recommended Practices.

The *Design Criteria*, shown in italics in section 3, state clearly and briefly what rule, guide, limitation, or standard must be imposed on each essential design element to assure successful design. The *Design Criteria* can serve effectively as a checklist of rules for the project manager to use in guiding a design or in assessing its adequacy.

The Recommended Practices, also in section 3, state how to satisfy each of the criteria. Whenever possible, the best procedure is described; when this cannot be done concisely, appropriate references are provided. The Recommended Practices, in conjunction with the *Design Criteria,* provide positive guidance to the practicing designer on how to achieve successful design.

Both sections have been organized into decimally numbered subsections so that the subjects within similarly numbered subsections correspond from section to section. The format for the Contents displays this continuity of subject in such a way that a particular aspect of design can be followed through both sections as a discrete subject.

The design criteria monograph is not intended to be a design handbook, a set of specifications, or a design manual. It is a summary and a systematic ordering of the large and loosely organized body of existing successful design techniques and practices. Its value and its merit should be judged on how effectively it makes that material available to and useful to the designer.

CONTENTS

1. INTRODUCTION 1

2. STATE OF THE ART 3

3. DESIGN CRITERIA and Recommended Practices 67

REFERENCES 93

GLOSSARY 95

NASA Space Vehicle Design Criteria Monographs Issued to Date 99

SUBJECT	STATE OF THE ART		DESIGN CRITERIA	
BIPROPELLANT GAS GENERATORS	*2.1*	3	*3.1*	67
Chamber	*2.1.1*	8	*3.1.1*	67
Shape	*2.1.1.1*	9	*3.1.1.1*	67
Size	*2.1.1.2*	19	*3.1.1.2*	68
Exhaust Outlet	*2.1.1.3*	20	*3.1.1.3*	68
Mixing Baffles and Turbulence Rings	*2.1.1.4*	22	*3.1.1.4*	69
Mounts	*2.1.1.5*	23	*3.1.1.5*	69
Thermal Protection	*2.1.1.6*	23	*3.1.1.6*	70
Materials	*2.1.1.7*	23	*3.1.1.7*	70
Fabrication	*2.1.1.8*	24	*3.1.1.8*	70
Injector	*2.1.2*	24	*3.1.2*	71
Injector Types	*2.1.2.1*	24	*3.1.2.1*	71
Elements	*2.1.2.2*	28	*3.1.2.2*	71
Orifices	*2.1.2.3*	28	*3.1.2.3*	72
Film-Cooling Orifices	*2.1.2.4*	30	*3.1.2.4*	72
Poppet Valves	*2.1.2.5*	30	*3.1.2.5*	73
Manifolds	*2.1.2.6*	33	*3.1.2.6*	74
Interpropellant Seals	*2.1.2.7*	34	*3.1.2.7*	75
Injector Materials	*2.1.2.8*	34	*3.1.2.8*	75

SUBJECT	STATE OF THE ART		DESIGN CRITERIA	
Accessories	*2.1.3*	36	*3.1.3*	76
Igniters	*2.1.3.1*	36	*3.1.3.1*	76
Igniter Boss	*2.1.3.2*	38	*3.1.3.2*	77
Flanges	*2.1.3.3*	38	*3.1.3.3*	77
Fasteners	*2.1.3.4*	41	*3.1.3.4*	78
Auxiliary Injectors	*2.1.3.5*	43	*3.1.3.5*	79
Drains	*2.1.3.6*	45	*3.1.3.6*	79
MONOPROPELLANT GAS GENERATORS	*2.2*	45	*3.2*	80
Chamber	*2.2.1*	46	*3.2.1*	80
Size	*2.2.1.1*	47	*3.2.1.1*	80
Heat Control	*2.2.1.2*	48	*3.2.1.2*	81
Trays and Retainers	*2.2.1.3*	49	*3.2.1.3*	81
Seals	*2.2.1.4*	52	*3.2.1.4*	82
Supports	*2.2.1.5*	52	*3.2.1.5*	83
Materials	*2.2.1.6*	52	*3.2.1.6*	83
Catalyst	*2.2.2*	53	*3.2.2*	83
Bed or Pack	*2.2.2.1*	53	*3.2.2.1*	83
Catalyst Materials	*2.2.2.2*	55	*3.2.2.2*	84
Poisons	*2.2.2.3*	56	*3.2.2.3*	84
Wall Dams	*2.2.2.4*	56	*3.2.2.4*	85
Injector	*2.2.3*	57	*3.2.3*	85
Orifices	*2.2.3.1*	57	*3.2.3.1*	85
Manifolds	*2.2.3.2*	57	*3.2.3.2*	85
Injector Face	*2.2.3.3*	58	*3.2.3.3*	86
Accessories	*2.2.4*	59	*3.2.4*	86
Fasteners	*2.2.4.1*	59	*3.2.4.1*	86
Igniters	*2.2.4.2*	59	*3.2.4.2*	87
COMMON PROBLEMS	*2.3*	61	*3.3*	87
Pressure Measurement	*2.3.1*	61	*3.3.1*	87
Type of Measurement	--	-	*3.3.1.1*	87
Tap Location	--	-	*3.3.1.2*	88

SUBJECT	STATE OF THE ART		DESIGN CRITERIA	
Temperature Measurement	*2.3.2*	61	*3.3.2*	88
Thermocouple Durability	--	-	*3.3.2.1*	88
Thermocouple Insulation	--	-	*3.3.2.2*	88
TESTING	*2.4*	62	*3.4*	88
Bipropellant Gas Generator	*2.4.1*	62	*3.4.1*	88
Objectives	*2.4.1.1*	62	*3.4.1.1*	88
Problem Areas	*2.4.1.2*	62	*3.4.1.2*	89
Data Utilization	*2.4.1.3*	64	*3.4.1.3*	90
Contamination and Safety	*2.4.1.4*	64	*3.4.1.4*	91
Monopropellant Gas Generator	*2.4.2*	65	*3.4.2*	91
Objectives	*2.4.2.1*	65	*3.4.2.1*	91
Problem Areas	*2.4.2.2*	65	*3.4.2.2*	92
Contamination and Safety	*2.4.2.3*	65	*3.4.2.3*	92

LIST OF FIGURES AND TABLES

Figure	Title	Page
1	Axial-outlet, axial-flow GG with mid-chamber turbulence rings	10
2	Axial-outlet, reverse-flow GG with turbulence ring near injector	11
3	Axial-outlet, axial-flow GG with mid-chamber turbulence ring (Titan II booster)	12
4	Axial-outlet, axial-flow GG with turbulence ring near injector (Titan II 2nd stage)	13
5	Side-outlet, reverse-flow GG	14
6	Simplified side-outlet, reverse-flow GG (Atlas MA-2 booster)	15
7	Simplified side-outlet, reverse-flow GG with turbine spinner provision (H-1 engine)	16
8	J-2 GG chamber	18
9	Experimental side-outlet GG	21
10	Uniform mixture ratio (UMR) injector	26
11	Orifice exit configurations	29
12	Face-shutoff poppet valve injector (J-2)	32
13	Igniter-boss installation	39
14	Insulator heat block	40
15	Airgap heat block	40
16	Elastic fastener assembly	42
17	Enzian-plate auxiliary injector	44
18	Hydrazine gas generator	50
19	Hydrogen peroxide gas generator	51
20	Holder for igniter crystals	60

Table	Title	Page
I	Design Characteristics of Operational Gas Generators for Turbine Drive	4

LIQUID PROPELLANT GAS GENERATORS

1. INTRODUCTION

Large liquid propellant rocket engines usually are supplied propellants at high pressure by the use of pumps. These pumps often are driven by a hot-gas turbine. The hot gases to drive the turbine can be obtained from two possible sources:

- Thrust chamber bleed
- Gas generators

This monograph treats the design of gas generators intended to provide hot gases for turbine drive. Gas generators also are used for applications such as auxiliary power drives, pressurization sources, and preburners for thrust chambers. None of these other applications is covered in this monograph, which is directed primarily at gas generators for turbine drives.

Gas generators commonly are subdivided into bipropellant and monopropellant, the distinction depending upon the propellant type used. The main emphasis of this monograph is on bipropellant gas generators because they are much more widely used than monopropellant gas generators. The major problem in all bipropellant gas generators is that of hot streaking. Since turbines have definite temperature limitations, the stratification of gases even at reasonable overall mixture ratios can cause severe damage to the blades and also to the ducts, turbine manifold, and even the gas generator itself. Most propellant combinations are capable of producing temperatures well above the melting point of common metals, and combustion can take place at local temperatures well above that of the mixed gas. Cooler propellant must be mixed with the combustion products to produce a gas of proper temperature. Thus any design that allows combustion to occur too near a wall or one that does not mix the hot and cold streams quickly will produce a catastrophic failure. The primary concern of the designer must be to control the location of the combustion zone and the process of mixing hot and cool streams.

The gas generator often is required to operate over a wider range of conditions (temperature, pressure, flowrate) than most other components of a rocket engine; this requirement increases the problems of hot streaking. The dual requirements for relatively wide range of operation and for uniform combustion and controlled mixing set the design of

gas generators apart from thrust chamber design. Early gas generators, however, were adaptations of thrust chambers and consistently were subject to hot spots and stratified flow. Years of development work to increase reliability have evolved techniques that are unique to gas generator design. These special design techniques, developed from the experience with gas generators that actually flew in rocket vehicles or at least reached a high state of development, form the body of information covered by this monograph. Some minor problem-solving methods that can save development time and cost if known before designs are released for fabrication are also covered in the monograph.

Monopropellant gas generators are not treated as extensively as the bipropellant, because the monopropellant type has had limited application on large rocket engines. Only two monopropellants have had any significant usage in large engines: hydrogen peroxide and hydrazine. With either of these two propellants, the problems of greatest importance are concerned with catalyst operation. The approaches to solving problems again are not identical with those used in thrust chamber designs. The designers of monopropellant thrusters and auxiliary power systems have made advances that have some application to large rocket engines; however, some discretion is needed in adapting these developments to large engine applications. Some of the differences are noted in this monograph.

In keeping with the greater importance of the bipropellant type, the monograph is arranged to cover bipropellant gas generator chambers, injectors, and accessories first; then the monograph treats monopropellant gas generator chambers, catalysts, injectors, and accessories. Concluding sections deal with "Common Problems" and "Testing" (subdivided into bipropellant and monopropellant discussions).

2. STATE OF THE ART

The early gas generators (GG's) were designed with the concepts and techniques used in thrust chambers because the same people designed both and the differences were still unknown. The designs often had so-called hot-core[1] injectors, in which some of the propellant was injected at mixture ratios comparable to those used in thrust chambers, and quenching propellant was added elsewhere. The hot-streak tendencies of these designs were strong, and numerous GG burnouts and damaged turbines resulted. The engine and stand damage involved cost several times the cost of the GG development programs. Millions of dollars were spent obtaining design solutions to these problems. Once the primary durability problem was solved, the many lesser problems such as leaks, warping, and handling damage were overcome. The information obtained on all of these problems is included in this monograph to the greatest possible extent.

The general approach to improved durability took two paths. First, the injector had to be designed to minimize the extent of hot zones by breaking them up into a larger number of smaller, more easily mixed, hot zones. This concept resulted in the uniform mixture ratio (UMR) injector that replaced the hot-core injector (except in special applications). Second, the mixing of hot and cool gases was found to be more difficult in a gas generator than in a thrust chamber where the energy in the turbulence is higher. Mixing baffles to promote mixing were extensively used and, later, the reverse-flow mixing chamber was developed to maximize mixing in the chamber.

In the few monopropellant gas generators used on rocket engines, the most serious problems, by far, were those of the catalyst. Both hydrogen peroxide and hydrazine gas generators have had catalyst degradation problems. For the former, silver screen catalysts have shown the best results, whereas in the latter the recent iridium catalysts appear to be a big improvement over the usual catalyst. However, the iridium catalysts are available in such limited quantity that any large engine will probably be prevented from using them for other than pilot igniter purposes. In addition, major monopropellants have high freezing points, and the difficulty in starting them near this point has been a serious drawback. Much good work on this problem has been done in the fields of auxiliary power systems and small thrusters; design information is available in the published literature covering those applications.

Table I summarizes the design information on both bipropellant and monopropellant gas generators that have been used in a number of rocket engine systems.

2.1 Bipropellant Gas Generators

The bipropellant gas generator design historically has predominated in the rocket engine turbopump drive field. The rocket engine system studies that precede the start of GG design

[1] Terms, symbols, materials, and abbreviations are defined in the Glossary.

Table I. – Design Characteristics of Operational Gas Generators for Turbine Drive

Engine or vehicle	Propellants	Flowrate		Temperature		Chamber pressure		Stay time	Turbine power	
		lb/sec	kg/sec	°F	K	psi	MN/m^2	msec	BHP	MW
F-1	Lox/RP-1	170.	77.25	1500	1089	1000	6.895	5.0	55,000	41.0
M-1	Lox/LH_2	110.	50.00	1000	811	1100	7.584	2.35	117,000	87.25
J-2	Lox/LH_2	7.2	3.28	1200	922	697	4.806	3.3	10,000	7.46
H-1	Lox/RP-1	13.5	6.14	1200	922	495	3.413	8.2	3,000	2.24
E-1*	Lox/RP-1	39.0	17.27	1400	1033	600	4.137	8.0	35,000	26.1
Atlas sustainer	Lox/RP-1	10.5	4.77	1100	867	770	5.309	5.2	2,500	1.86
Atlas MA-3 booster	Lox/RP-1	13.75	6.25	1200	922	475	3.275	8.2	3,000	2.24
Atlas MA-2 booster	Lox/RP-1	25.25	11.49	1200	922	570	3.930	10.5	5,500	4.10
Thor	Lox/RP-1	12.0	5.45	1250	950	450	3.103	10.5	–	–
Agena	IRFNA/UDMH	1.6	0.726	1450	1061	475	3.275	4.3	371	0.277
Titan II 1st stage	N_2O_4/A-50	13.2	6.00	1640	1167	540	3.723	3.7	5,000	3.73
Titan II 2nd stage	N_2O_4/A-50	5.7	2.59	1660	1178	480	3.310	2.3	2,100	1.57
Jupiter	Lox/RP-1	12.1	5.51	1200	922	490	3.378	10.5	2,500	1.86
Jupiter storable	N_2H_4	6.0	2.73	1600	1144	500	3.447	–	2,500	1.86
Redstone	H_2O_2	6.0	2.73	**	**	–	–	–	748	0.558
Navaho	Lox/RJF-1	35.0	15.90	1200	922	570	3.930	11.5	9,000	6.71
Vanguard 1st stage	H_2O_2	2.3	1.05	1300	978	540	3.723	–	–	–

* E-1 was a back-up engine to the F-1 during development.
** 76% H_2O_2

Table I. – Design Characteristics of Operational Gas Generators for Turbine Drive (concluded)

Engine or vehicle	Propellants	Injector type	Injector material	Chamber material	Flow path	Igniter
F-1	Lox/RP-1	Doublet	CRES/copper	Hastelloy C	Reverse	Pyro
M-1	Lox/LH_2	Coaxial	Rigimesh	N-155	Axial	Pyro
J-2	Lox/LH_2	Poppet	CRES/copper	Hastelloy C	Curved axial	Spark
H-1	Lox/RP-1	Triplet	Copper	CRES	Reverse	Turb. spinner
E-1*	Lox/RP-1	Triplet	Copper	CRES	Reverse	Pyro
Atlas sustainer	Lox/RP-1	Poppet	Copper	CRES	Reverse	Turb. spinner
Atlas MA-3 booster	Lox/RP-1	Poppet	Copper	CRES	Reverse	Turb. spinner
Atlas MA-2 booster	Lox/RP-1	Triplet	Copper	CRES	Reverse	Pyro
Thor	Lox/RP-1	Doublet	Copper	CRES	Reverse	Pyro
Agena	IRFNA/UDMH	Doublet	CRES	N-155	Axial	Hypergolic
Titan II 1st stage	N_2O_4/A-50	Doublet	Nickel	N-155	Axial	Hypergolic
Titan II 2nd stage	N_2O_4/A-50	Doublet	Nickel	CRES	Axial	Hypergolic
Jupiter	Lox/RP-1	Triplet	Aluminum	CRES	Reverse	Pyro
Jupiter storable	N_2O_4	Swirl nozzle	Haynes 25	Haynes 25	Axial	Hypergolic
Redstone	H_2O_2	Jet stream	CRES	CRES	Axial	None
Navaho	Lox/RJF-1	Doublet	Copper	CRES	Reverse	Pyro
Vanguard 1st stage	H_2O_2	–	CRES	CRES	–	

* E-1 was a back-up engine to the F-1 during development.

normally define, from a system standpoint, the GG propellants, exhaust gas conditions, pressure drop allocation, auxiliary functions, handling requirements, and envelope restrictions. The details of these system studies are provided in reference 1. Of the system variables, the propellant selection has the most effect on GG design.

The influence of propellant selection is more clearly presented and more easily understood if it is first recognized that the usual bipropellant gas generator consists of three major parts. Listed in order of propellant flow, these parts are

(1) The manifold-valve assembly that controls the propellant entry to the injector and the sequence of operation.
(2) The injector that atomizes and distributes the propellants.
(3) The body or combustion chamber where burning and mixing take place.

For various reasons, however, these parts are treated in reverse order in design; therefore in this monograph the design sequence (3), (2), (1) forms the order of discussion.

The "normal" bipropellant combinations are those whose thermal energy results primarily from oxidizer-fuel reactions; examples of "normal" combinations are LOX-RP-1, LOX-LH_2 and nitric acid-aniline. Experience has shown that the design requirements for injection, burning, and mixing do not differ radically among these propellants regardless of whether they are cryogenic or storable, high or low density, hypergolic or nonhypergolic, or fuel rich or oxidizer rich. The philosophy is the same: produce the finest atomization possible, burn in small scattered locations, and mix vigorously with diluent for best results.

Nearly all GG designs in the past have provided fuel-rich operation, for two main reasons:

(1) The damage potential of a hot streak is much less with a fuel-rich gas than with an oxidizer-rich gas.
(2) The turbine specific propellant consumption is much better with fuel-rich gases, which are usually low molecular weight, than with oxidizer-rich gases, which are relatively high molecular weight.

This preference has held despite the fact that fuel-rich combustion gases, particularly hydrocarbons, usually are nearly impossible to describe by normal chemical kinetics techniques. The thermal cracking of hydrocarbons is extremely complex. Most gas generators using "normal" bipropellants operate at mixture ratios from 0.2 to 1.0, with hydrocarbons falling in the lower end, about 0.3, and hydrogen falling at the upper end, 0.98 to 1.0. It is apparent that under all these conditions the fuel concentration is many times that required for complete reaction of the oxidizer. Great fuel availability is the reason that only the poorest of GG designs achieves less than complete combustion. The rate of oxidation at GG temperatures is very rapid and usually is not a problem; i.e., the reaction is completed in the chamber. However, the vaporization and mixing processes are quite slow, the times being of the order of several milliseconds. These low rates often are not well appreciated by engineers experienced in the design of thrust chambers where

comparable processes are much faster. As a consequence of the low rates for vaporizing and mixing, the combustion zone for a gas generator is wider than that for a thrust chamber, and the combustion-product/excess-fuel mixing zone is very much longer than that in a thrust chamber. The first consequence of this difference in rates is a stronger emphasis in gas generators on fine stream injectors that require minimum flow (secondary) atomization (sec. 2.1.2). The second consequence is the greater emphasis in gas generators on mechanical mixing devices.

Despite the differences noted, the design of GG injectors in most aspects follows good thrust chamber practices (see reference 2 for details). The GG injector, because of the heavily-fuel-rich mixture ratio, usually requires drastically unbalanced manifold volumes. Greater emphasis is placed on considerations of stream formation and placement than is characteristic of thrust chambers, for the reasons just stated. Considerations of performance are not very serious in GG injector design; however, those concepts that improve performance in thrust chambers often improve mixing and suppress hot streaks in gas generators.

Two lines of approach to the design of mixing devices have been taken. The first, derived from thrust chamber experience, provided orifice rings placed at various points along the flow path of a chamber. This design concept produced high turbulence near the walls, where film coolant flow and injector overspray often were difficult to mix with the high-velocity central flow, but the central zone of the chamber was relatively undisturbed; this design is simple, inexpensive, and widely used. The second approach departed drastically from thrust chamber practice and required the design of a chamber in which the injected, partially mixed flow was forced to stagnate and then reverse direction. The very good mixing involved in such designs results in relatively low temperatures and relatively high reliability. When the stagnation surface is submerged in the hot gas, the mixing is quite critical; and the incorporation of auxiliary coolant injectors is nearly impossible. Stagnation against an outside wall makes design modifications such as adding a coolant injector much easier. Unfortunately, neither of these approaches for the design of mixing devices has been based upon quantitative theory and only recently has there been any significant progress in adapting process theories to GG design.

"Energetic" bipropellants form another major division of propellants for gas generators. These propellants are defined as those that contribute energy to the gas through exothermal decomposition prior to oxidation reactions; examples are Aerozine-50, UDMH, and hydrazine. The typical mixture ratios for these propellants fall below 0.2. Besides the usual streaking problem, gas generators using "energetic" propellants have been found to be subject to reaction instability and, at very low mixture ratios, even flameout. The instability usually is the result of a marginal monopropellant decomposition reaction that alternately quenches and restarts. Although a variety of factors (injector design, chamber size, chamber proportions, etc.) influence this type of stability, the strongest influence is exhaust temperature. Temperatures of 1000°F to 1400°F (811K to 1033K) are conducive to instability. Below 1000°F (811K), the propellants vaporize but do not react quickly enough to cause pressure pulses; above 1400° (1033K), the propellants react so quickly that accumulations do not form, and pressure pulses are avoided.

The suggestion often is made to run oxidizer-rich even with the performance penalty. If N_2O_4 is the oxidizer, other problems then appear. First, the decomposition of the intermediate NO_2 is fairly slow, thus causing additional performance losses. Second, the fuel combustion produces water, which combines with the excess oxidizer to form an extremely corrosive HNO_3 atmosphere. The main objection, however, is the danger of burning the chamber with even simple oxidizers such as oxygen and fluorine. So far, oxidizer-rich bipropellant GG's have been objects of studies without any major applications.

The injectors used with the "energetic" category of bipropellant gas generators usually are a form of hot-core injector. The quantity of oxidizer used is so small that it cannot in practice be evenly distributed over the injector. In this case, the oxidizer injection system forms a "pilot light" for the reaction. The main objectives of the injector designer then are to

(1) Provide fine atomization of the large excess of fuel to enhance heat transfer to the fuel and at the same time prevent heavy drops from quenching the small heat sources.
(2) Provide void areas for enhanced recirculation of hot gases that are necessary to decompose the main part of the fuel flow.

2.1.1 Chamber

The designer of a bipropellant GG chamber has four major objectives:

(1) To ensure that the combustion processes are completed rapidly. Injectors (with the possible exception of the so-called "micro-orifice" types) provide mainly coarse atomization; the fine atomization to groups of a few hundreds of molecules that is required for combustion is accomplished by both heating and aerodynamic effects. The design of the chamber, by causing flow acceleration and deceleration, produces the differential gas velocities that cause most of the atomization and thus localizes the flame zone.
(2) To force mixing of excess propellant and combustion products to provide a uniform exit gas temperature. This mixing also prevents damaging the gas generator and turbine by hot streaks. In many ways this is the most difficult part of GG design. There is a strong tendency for hot gas to maintain high velocities and stay near the center of a duct and for cool gas to stay near the walls.
(3) To provide a gas generator that can fit the allowed engine envelope. Compact engine designs often place a premium upon size and position of the gas generator. This consideration is one of the major reasons for the variety of configurations.
(4) To deliver the hot gas to the turbine with pressure losses no greater than planned.

The achievement of these objectives in an acceptable design is the substance of this portion of the monograph. The design of the chamber for a bipropellant gas generator, however, is not an exact science but a mixture of some science and some art. Those aspects that can be reduced to practical rules are presented below.

2.1.1.1 Shape

The primary consideration in chamber design is maximum mixing. Two general design approaches to mixing are the axial-flow-with-turbulence-rings design shown in figure 1 and the reverse-flow, axial-discharge design shown in figure 2. The differences and similarities in these designs are treated in detail in references 3 through 6.

The axial design shown in figure 1 often is used with hot-core injectors in which the central area of the injector is designed to run at a relatively high mixture ratio and temperature, and the excess propellant or diluent necessary to cool the combustion products to design temperature is injected into the outer area of the injector. With this approach, the initial stratification of the gas is high. Turbulence rings are installed to create turbulence in the wall region with the intent that turbulent diffusion will eventually mix the entire cross section. The GG design shown in figure 1 was used for comparative testing reported in reference 7. A similar test program is reported in reference 8. Two positions of the turbulence rings were favored by designers. One location near mid chamber, illustrated in figure 3, was used in the Titan II booster axial-flow GG. In this design, the turbulence ring is well below the main combustion zone and is subjected to fairly hot gas. This design has been used successfully where chamber size was relatively large. In a smaller chamber, the Titan II second-stage GG, hot spots and streaks were encountered. After a development program on this assembly was conducted, better operation was obtained when the turbulence ring was located so near to the injector that it became a splash ring for the injector streams and thus served both purposes. This configuration is shown in figure 4.

The reverse-flow concept (fig. 2), which has been very successful, produces turbulent mixing by forcing the flow to stagnate and then reverse its direction. This design, which provided axial discharge, was used in the comparative testing reported in reference 2; a later refinement was used in an experimental engine on the Navaho program. Although this design was used with a hot-core type of injector, reliable operation was obtained at the rated gas temperature of 1400°F (1033K). Variation in temperature across the outlet port was less than 50°F (28K), and this small variation was obtained with about one-third the pressure loss required with the turbulence-ring approach. Packaging requirements led to the development of the side-outlet, reverse-flow gas generator shown in figure 5 (which presents a composite of features used in the Thor and Jupiter GG's). This design was shortened considerably from that shown in figure 2, and bottom overheating and burning occurred. An auxiliary injector was used, and the mixing characteristics were found to be the same when similar injectors were used in both chamber designs. The use of a bottom-mounted tubular mixing baffle reduced pressure loss considerably below that caused by the flow ports used in the design shown in figure 2. Later development work showed that the complex mixing baffle and auxiliary injector could be eliminated by using a uniform mixture ratio (UMR) injector and providing sufficient flow area to permit unrestricted flow reversal and recirculation. The prototype of the design shown in figure 6 was run satisfactorily with a hot-core injector, thus showing the capability of the design. A modified version is shown in figure 7; the temperature variations across the chamber exits were less than 100°F (56K). The chambers in figures 6 and 7 have flat bottoms to avoid trapping unburned propellant.

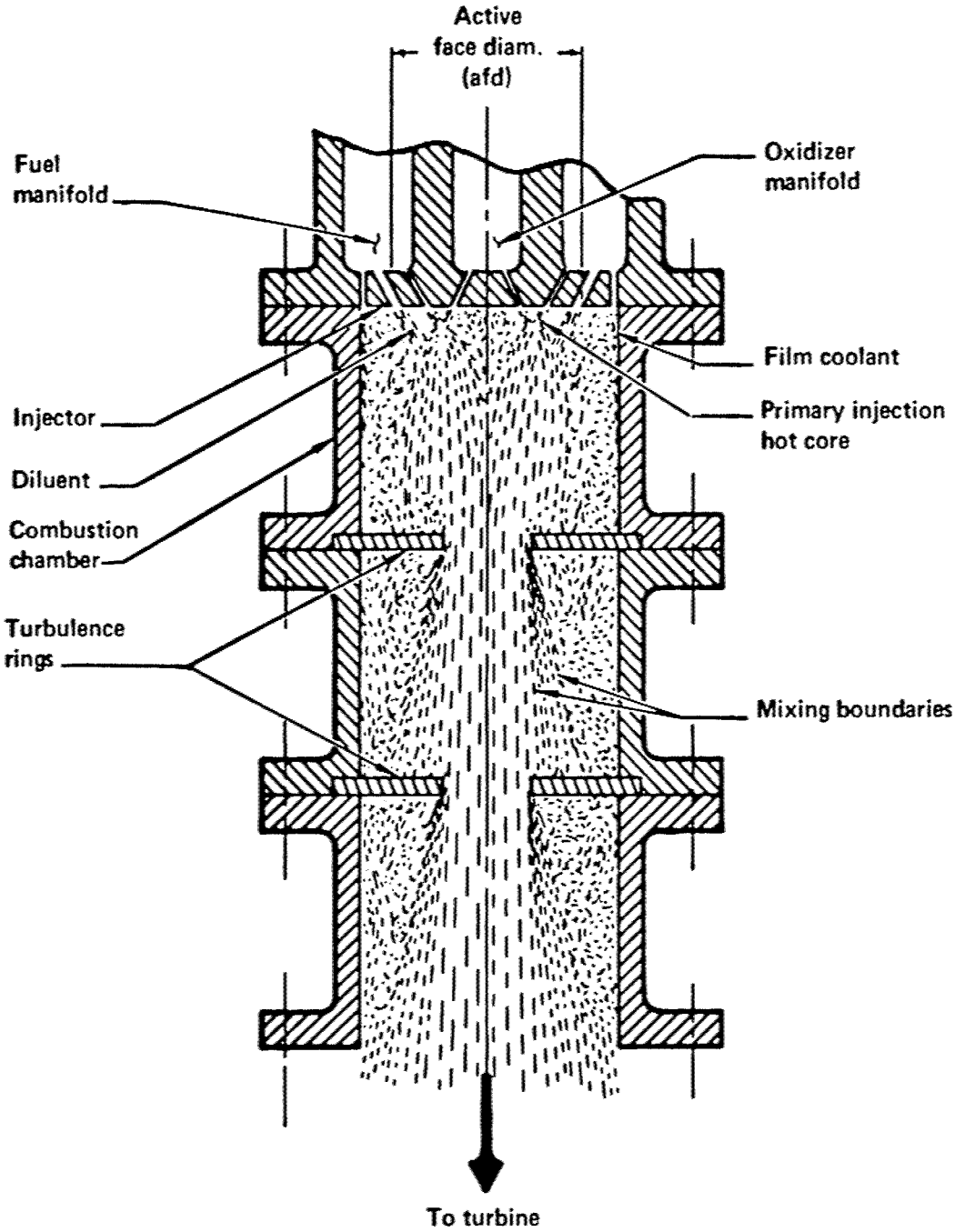

Figure 1. – Axial-outlet, axial-flow GG with mid-chamber turbulence rings

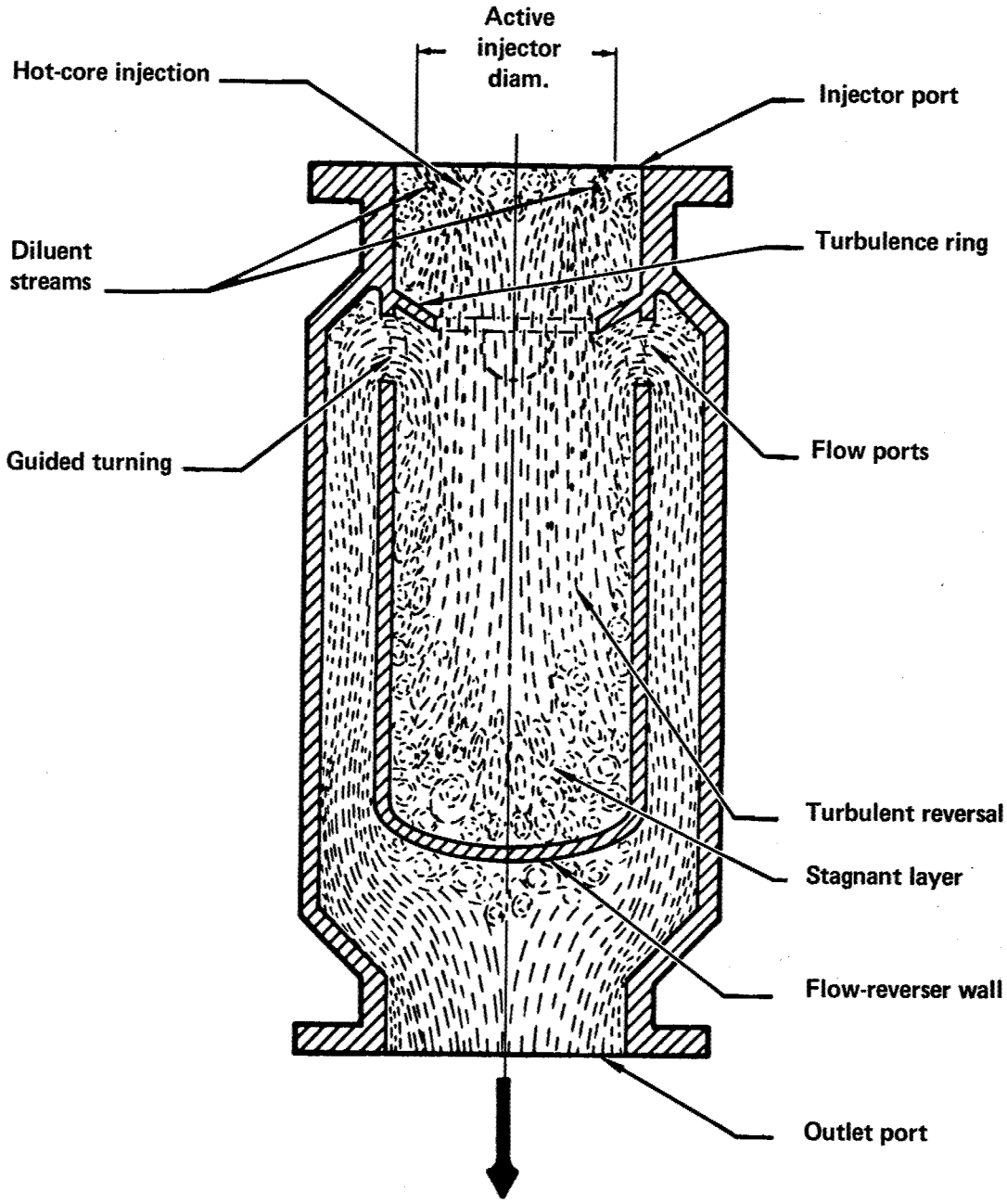

Figure 2. — Axial-outlet, reverse-flow GG with turbulence ring near injector

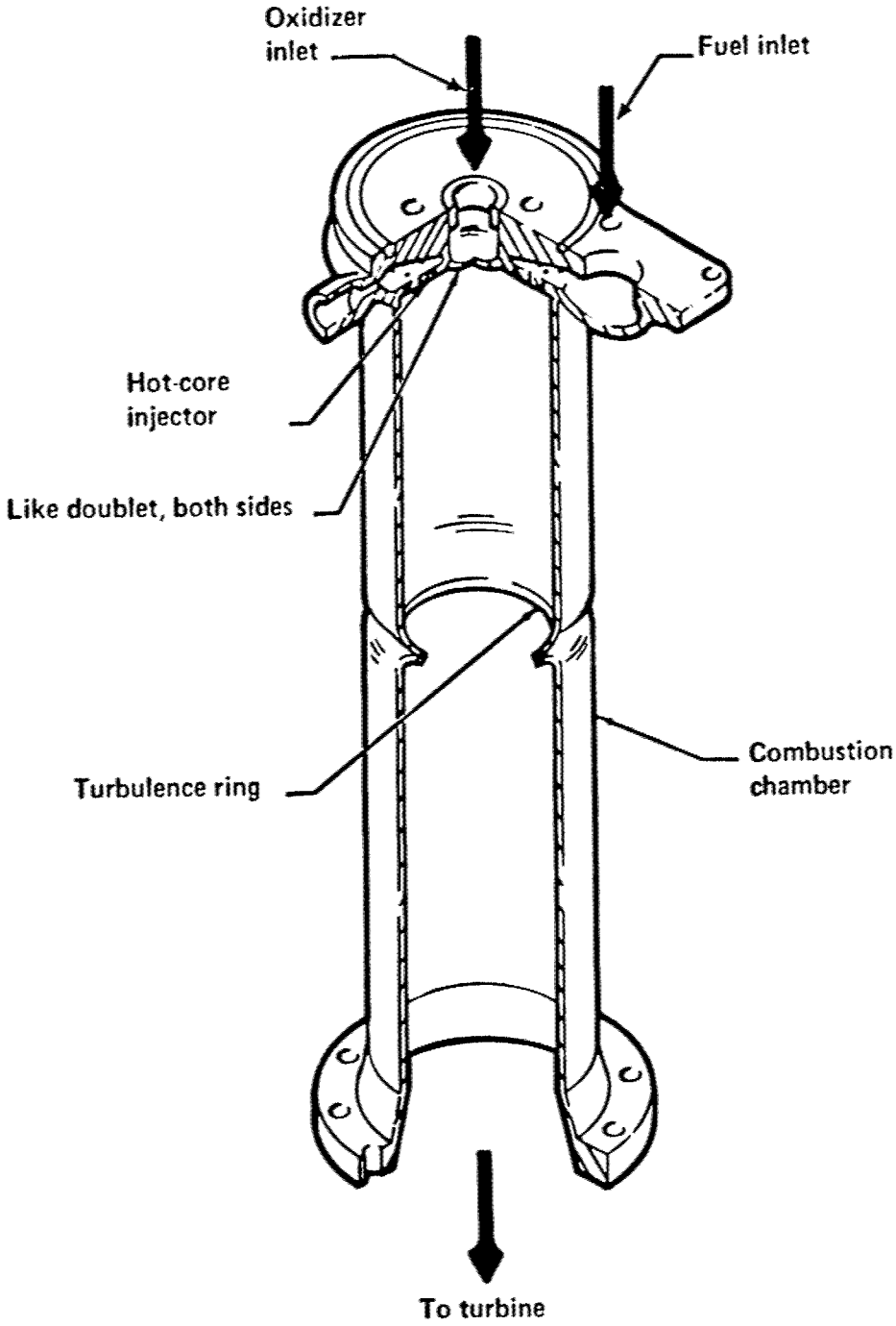

Figure 3. – Axial-outlet, axial-flow GG with mid-chamber turbulence ring (Titan II booster).

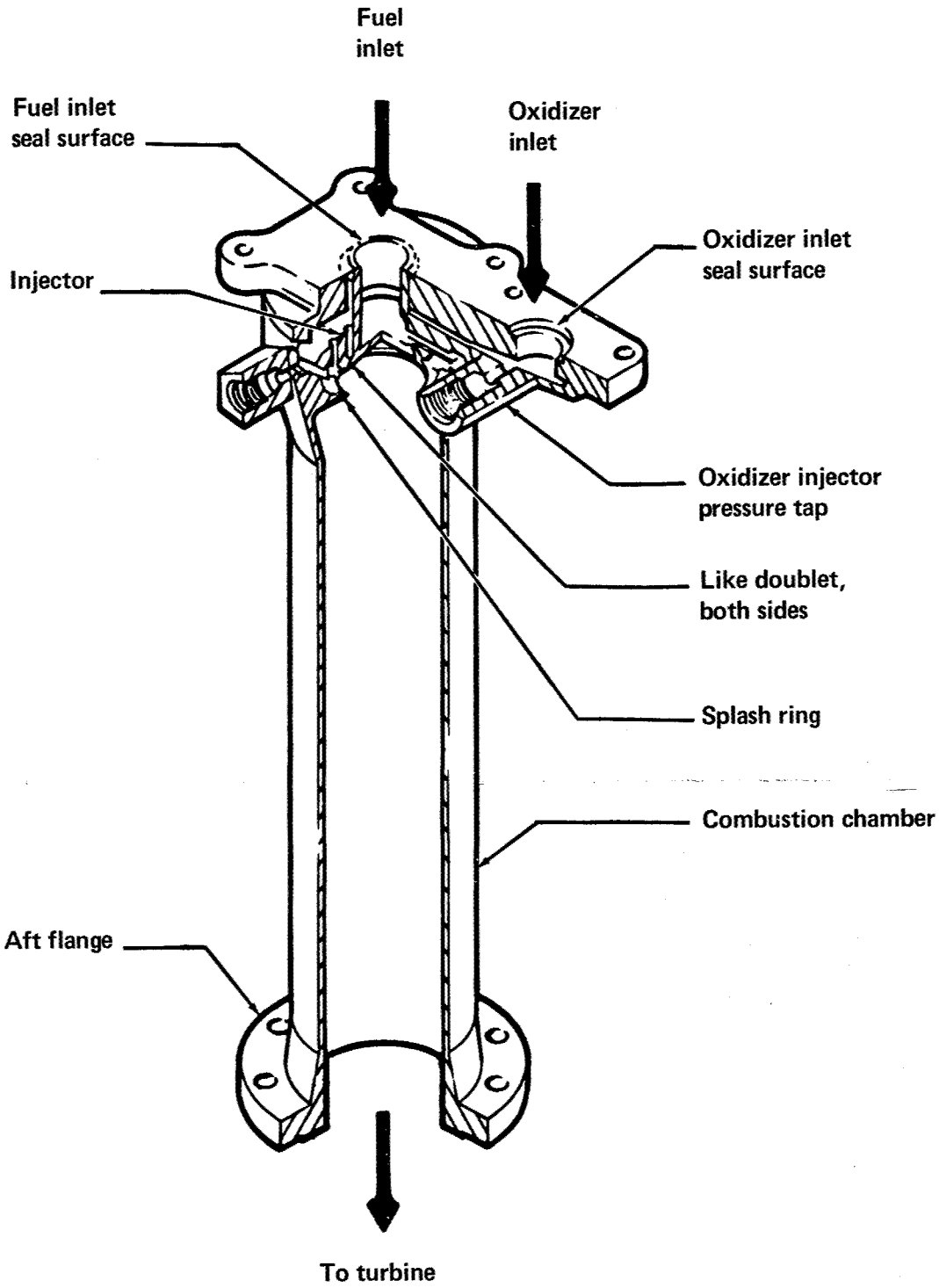

Figure 4. — Axial-outlet, axial-flow GG with turbulence ring near injector (Titan II 2nd stage)

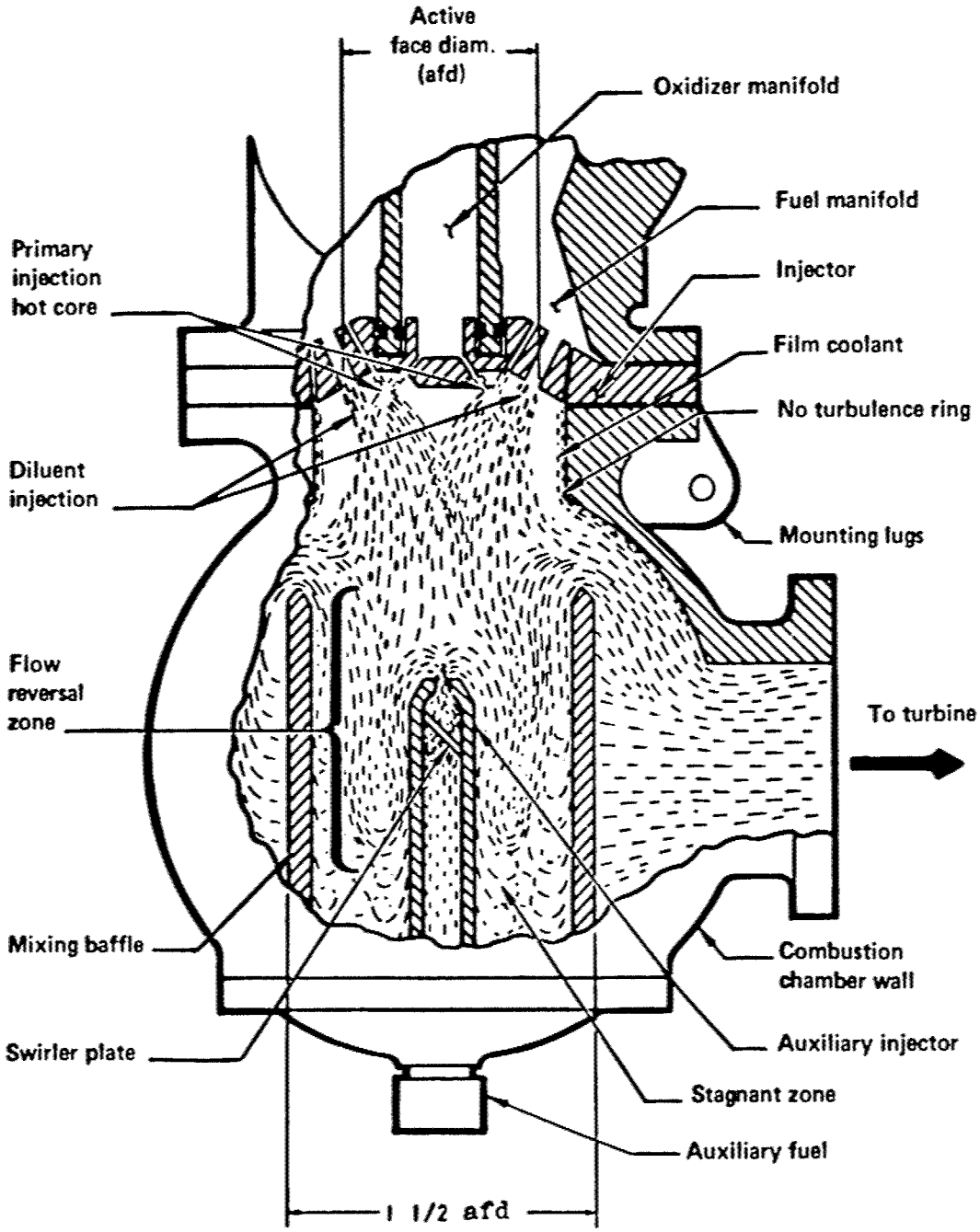

Figure 5. – Side-outlet, reverse-flow GG

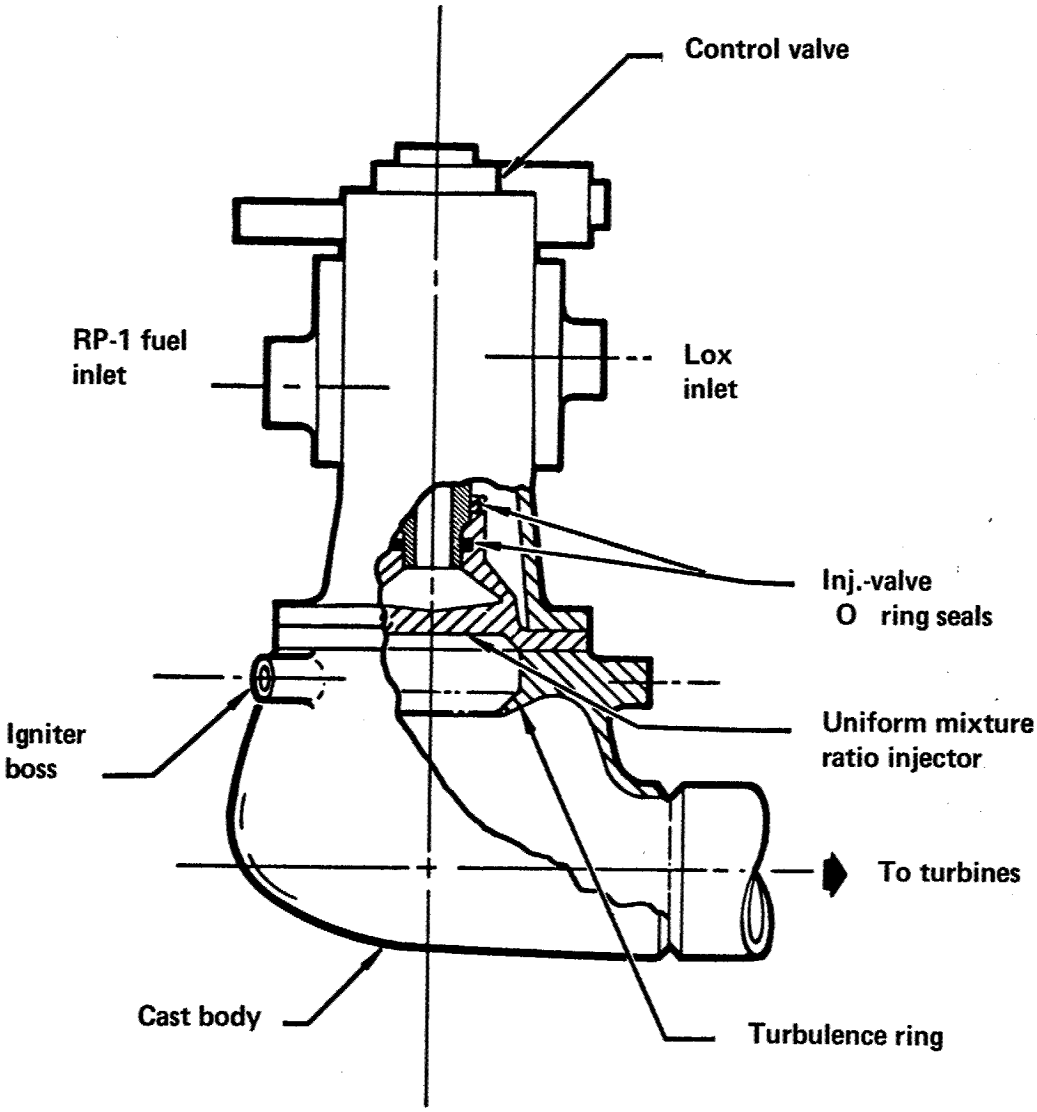

Figure 6. — Simplified side-outlet, reverse-flow GG (Atlas MA-2 booster)

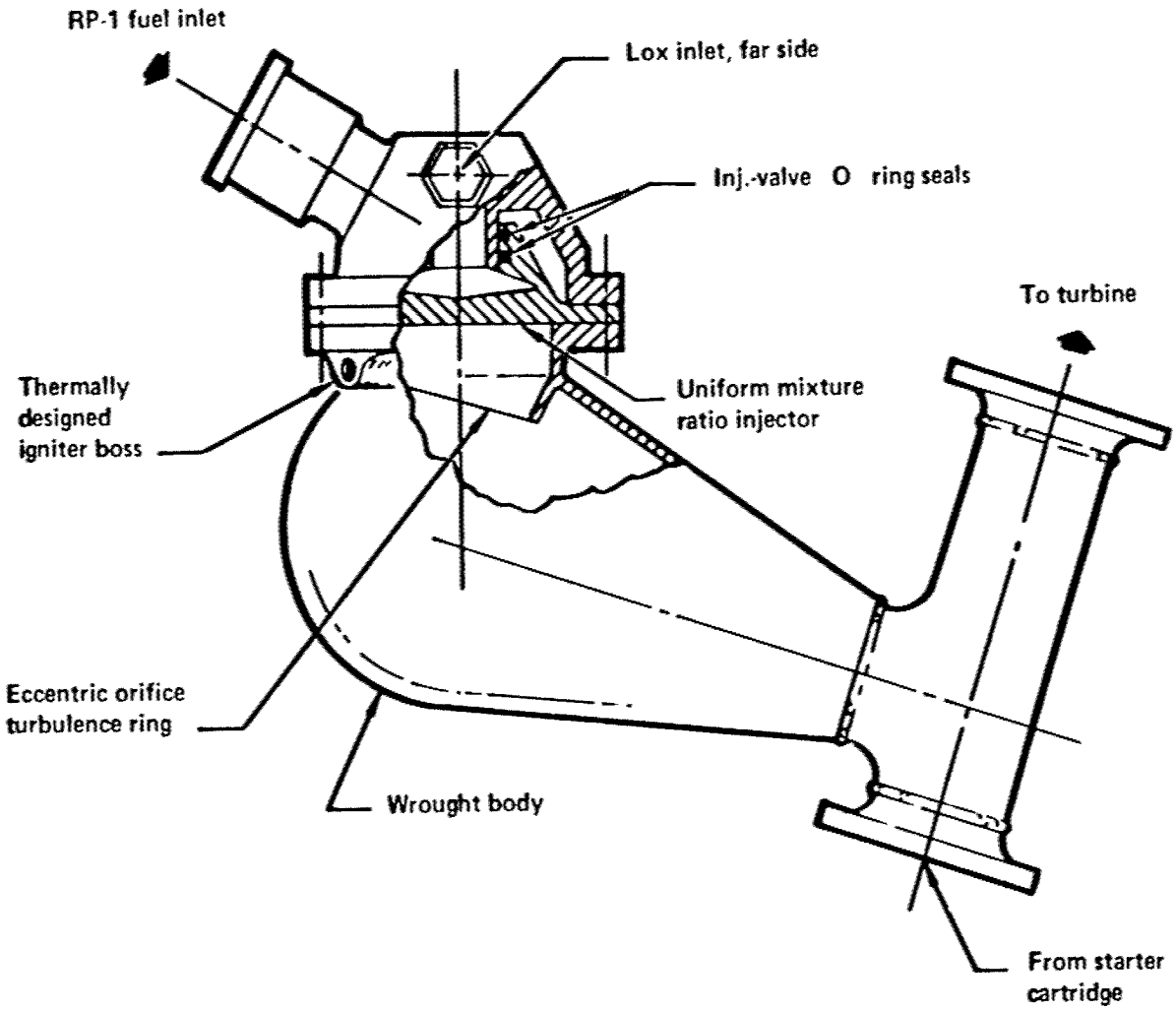

Figure 7. – Simplified side-outlet, reverse-flow GG with turbine spinner provision (H-1 engine)

The design of the chamber of the J-2 gas generator shown in figure 8 did not provide adequate recirculation area for the high-volume gases. When it was used with the hot-core (poppet) injector, considerable hot-spot difficulty was encountered. Such a hot-spot characteristic is not unusual for hot-core injectors in undersized gas generators. Satisfactory operation was obtained by increasing the amount of film coolant and by modifying the turbulence ring. Even with these changes, however, the temperature variation at the exhaust outlet and the margin for safe operation (wall temperature below a specified level) were not as satisfactory as those of the designs shown in the other figures.

The hot-core gases (in a coaxial-type injector) with high relative velocities do not turn as readily as the cooler, lower velocity gases. When the design provides a side outlet, the hot gases penetrate to the bottom and overheat the lower half of the discharge port. In straight-sided chambers as in the J-2 GG (fig. 8), jet pumping action will pull the hot core to the wall opposite the outlet. The exhaust temperature stratification is particularly noticeable in highly confined chambers. An experimental chamber made from a commercial pipe elbow was particularly bad in this respect. The stratification process described has been called "momentum separation" and is one major reason that mixing must be accomplished within the GG chamber before the outlet is reached.

In axial-flow chambers, lack of mixing often is hard to detect. Among the indicators are frequent thermocouple failures and heat marking of the turbine nozzles near the inlet. Turbine blades are not good indicators because of their rapid movement from hot to cool zones.

The above designs were the result of experimentation and were not based on theoretical considerations. Only recently has a theoretical approach to the mixing problem been offered. In reference 3 a method is given by which approximate GG proportions can be found. The length of the potential core (unmixed flow) for an axial-flow system is given therein as

$$X_{ShCh} = 4.55\,H$$

where

X_{ShCh} = length of potential core, in. (cm)
H = radius of larger diameter wall or passage enlargement, in. (cm)

The completion of mixing extends beyond the axial core a short distance, which also can be determined by using the approach described in reference 3. The potential-core length of a

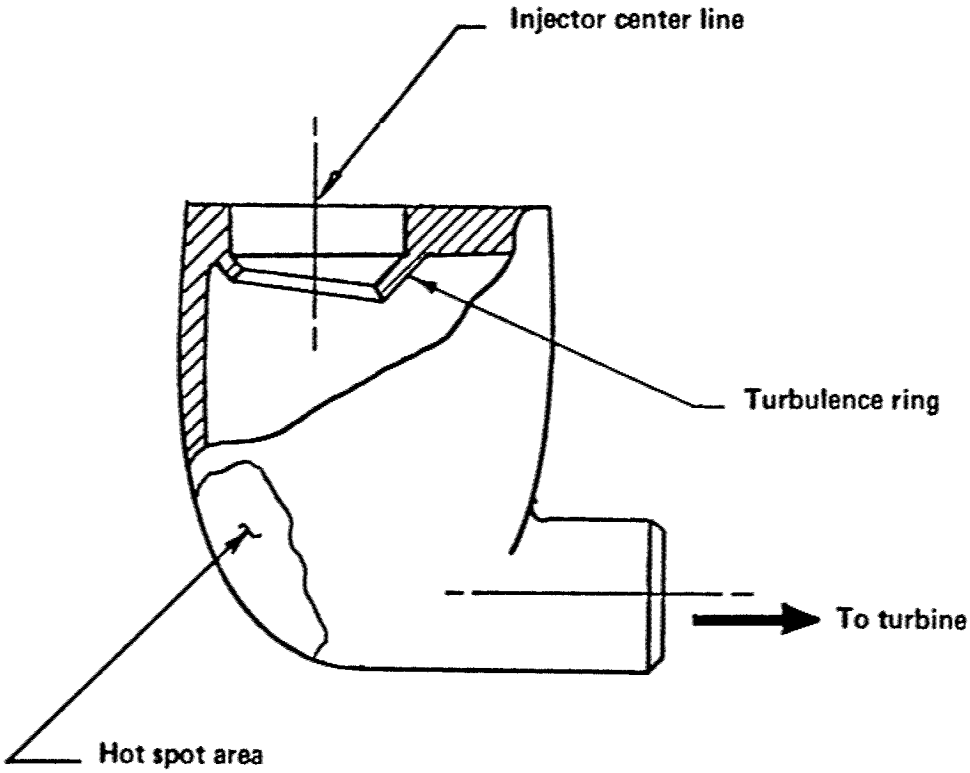

Figure 8. – J-2 GG chamber

reverse-flow system is shown (ref. 3, p. 460) as

$$X_M = -0.5\,H$$

where

X_M = length of potential core, in. (cm)
H = radius of outer wall, in. (cm)

Again, completion of mixing requires some additional length that can be determined by the method given.

While there is no evidence that the theory cited above has been used to design a new gas generator, qualitative indications are that even in its simplest form the above approach will give more design guidance than do the thrust chamber design parameters presently used to design gas generators. For this reason, and despite its obvious shortcomings such as lack of consideration of reactions and density changes, the theoretical approach probably will provide the basis for future GG designs.

2.1.1.2 Size

The size of a GG chamber is as important as its configuration. A number of chamber sizing methods have been tried; these include using L*, stay time, or volumetric loading (ref. 9) for scaling designs. The most useful parameter still appears to be stay time. Although not exact, the stay-time approach gives some insight into the time available for processes such as mixing, decomposition, and vaporization. Naturally, each propellant combination is somewhat unique in its minimum stay-time requirements. The figures shown in table I are for time in the chamber only and do not include time in ducts and turbine manifold. For instance, the F-1 chamber has a stay time of 5 msec; but the associated turbine manifold has a stay time of 14 msec. This increased stay time is significant in terms of thermal cracking of the fuel vapors before they reach the turbine, but it is of no help in preventing hot spots (the gases must be mixed before leaving the chamber). While thermal cracking usually is desirable, it can affect coking and gas temperature. An interesting test was made with the F-1 GG where a temperature rise in the turbine manifold was noted, and incomplete combustion was suspected. The gas generator was run with 40 to 80 feet (12.2 to 24.4m) of pipe on the discharge. Temperature increases were found even with this extreme stay time. The existence of oxygen over this length, with exhaust gas temperatures exceeding 1500°F (1089K), is extremely unlikely. Several explanations were proposed:

(1) Cool masses of unvaporized fuel or unmixed gases hit the upstream thermocouples and thus cooled them.
(2) Unexpected exothermic reactions of unstable molecules occurred.
(3) Exhaust gases were heated by viscous friction at the boundary of the flow stream (the pipe wall).

Operation at reduced GG temperature reduced the duct temperature rise, and both a UMR and a doublet injector gave similar results. Explanation (2) thus appears best, even though detailed mechanisms are not apparent.

Stay time is a fairly good measure of the proper size of a reverse-flow chamber. Early experimental work on the Atlas sustainer GG showed that, at stay times below 3 to 4 msec, mixing was inadequate and hot spots were troublesome. Above 6 to 10 msec, the margin for safe operation (wall temperature below a specified level) increased with increasing stay time.

2.1.1.3 Exhaust Outlet

The design of the GG outlet is subject to several problems that are not obvious immediately. Axial-flow GG's usually discharge downward and operate reasonably well. Drainage can be a problem when an inner chamber is used, as in figure 2; but the worst problem with an axial-flow design is that the hot gases are undeflected before they hit the turbine and, if a malfunction results in excessive gas temperatures, the first damage usually appears on the turbine nozzles and blades. Side outlets shown in figures 5, 6, and 7 show damage to the gas generator well before turbine damage becomes critical.

All the above gas generators have single outlets. A gas generator for the Navaho program, similar to that in figure 5, had two outlets positioned 180° from each other. This design resulted in burning of the mixing baffle, an effect attributed to flow instability resulting from the two outlets. A later model with a single outlet did not show these burning tendencies.

One of the most difficult problems with reverse-flow GG's is the problem of drainage of residual fuel. Chambers like those shown in figure 5 have entrapped significant amounts of RP-1. During handling, the RP-1 entered the liquid-oxygen manifold and caused detonations on start. The experimental GG shown in figure 9 also suffered from this problem, and drain bosses were installed as shown.

Another approach to drainage was the design of flat-bottom chambers as shown in figures 6 and 7. The flat bottoms drained well after firing; but, during handling, fuel from the turbine drained into the GG. Both of these GG's were handled with the exhausts up, and drainage was trapped in the body. Drain bosses similar to those shown in figure 9 should have been used but were not because of schedule requirements and design freeze.

The GG design shown in figure 9 was used in experiments to determine the effect of the longitudinal location of the exhaust port on hot streaking. It was found that the higher the outlet (nearer the injector), the better the mixing; however, with a UMR injector (sec. 2.1.2.1), even the low location used with flat-bottom chambers was satisfactory. With a hot-core injector, a high location and plenty of reverse-flow volume was needed.

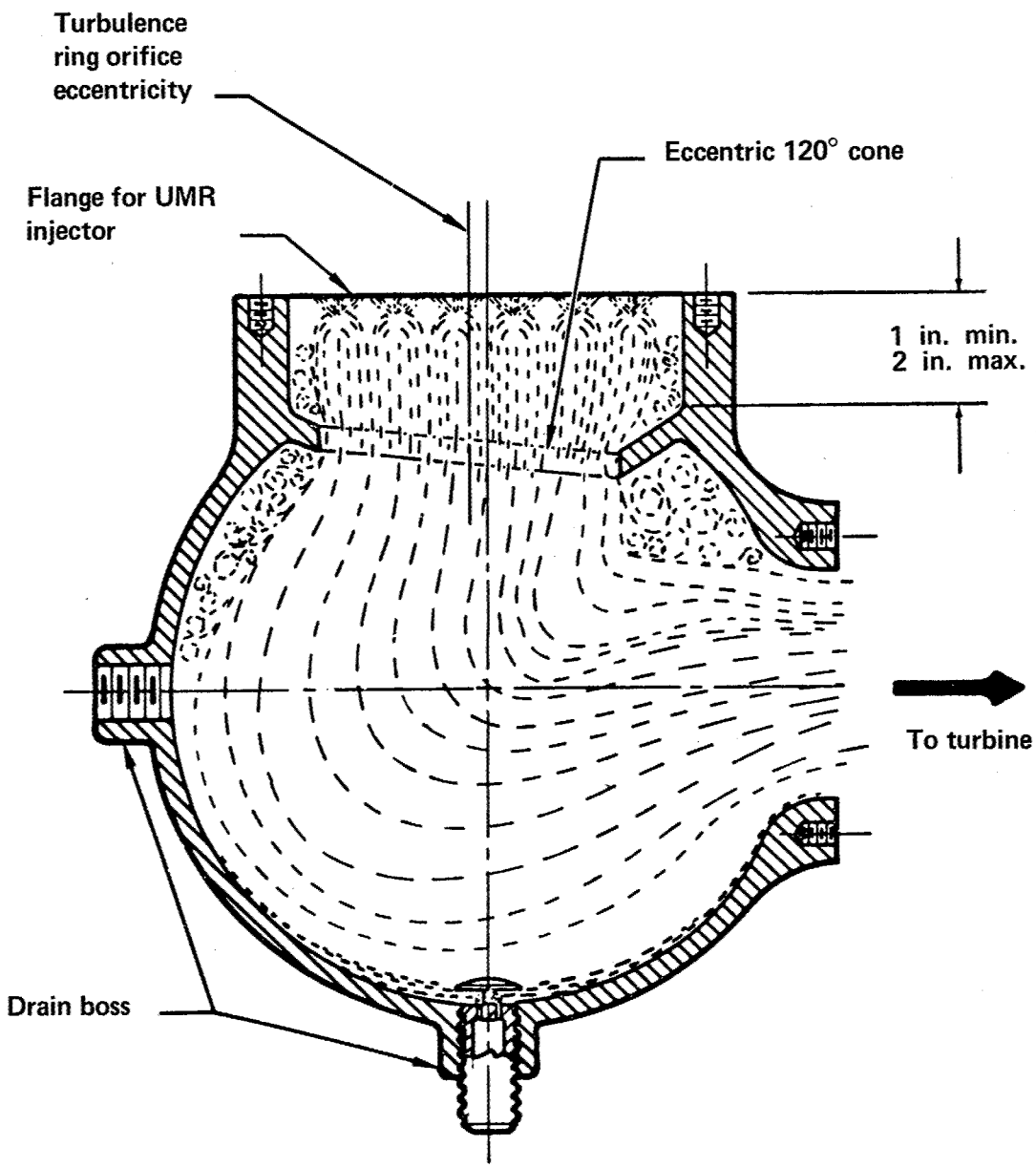

Figure 9. — Experimental side-outlet GG

2.1.1.4 Mixing Baffles and Turbulence Rings

Mixing baffles as shown in figure 5 and turbulence rings as shown in figures 1 through 4 have been widely used; however, their effectiveness often is overemphasized. Mixing baffles in reverse-flow chambers are needed primarily for troublesome hot-core injector designs; frequently, they are not required. With a difficult hot-core injector, the mixing baffles must be larger than the injection pattern, or reverse flow will be restricted and the upper edge of the baffle will burn. With too small a baffle, even refractory coating will not prevent edge burning. A relatively large diameter as shown in figure 5 is adequate. With large mixing baffles and troublesome hot-core injectors, bottom heating is excessive, and auxiliary injectors must be used.

Turbulence rings have been widely used in axial-flow GG's to improve mixing. They are quite effective in mixing film coolant and excess fuel near the outer wall, but they are not as effective in mixing a hot core. When the rings are placed below the flame front, they are subject to overheating, and local hot spots can result. The gas generator shown in figure 4 initially had a turbulence ring near mid chamber, similar to that shown in figure 3. The initial design was subject to hot spots. Further development showed that more effective mixing could be obtained by using a splash ring near the injector. In reverse-flow chambers, turbulence rings have been found beneficial in forcing mixing of the film coolant and in directing the reacting jet away from the outlet so that more reverse flow can be obtained in open chambers.

The turbulence ring shown in figure 6 was symmetrical because its primary purpose was to cause mixing of heavy film-coolant layers. The turbulence rings shown in figures 7 and 9 were eccentric because their purpose was to force the reacting jet away from the exit and produce more reverse-flow mixing. These rings were conical to minimize the pressure drop produced by a flat orifice as shown in figure 1. The high turbulence and flow constriction of flow through a flat-plate orifice was not needed. In addition, with the conical design, film coolant stayed attached to the lip of the ring and edge heating was seldom a problem. All these designs were highly successful.

If any turbulence ring is located more than 2 in. (5.08 cm) downstream of the injector, it becomes much more subject to overheating and edge burning. In some cases of great difficulty with hot spots, multihole turbulence rings have been tried. In general, such rings have not been satisfactory; usually they appear to focus the hot gases, making the hot spot more intense.

The jet-mixing theories presented in references 3 through 6 give some theoretical basis for turbulence-ring design; however, because designers were not familiar with these theories, designs have been based on empirical results without a good basic understanding of the jet

spreading process. Greater familiarity with the theoretical works will bring out the rather limited effectiveness of turbulence rings.

2.1.1.5 Mounts

Most gas generators are supported by the turbine manifold inlet flange; however, those GG's that feed more than one turbine usually have to be supported directly from the thrust mount. When the GG has been mounted to the turbine only, no mount problems have developed. Gas generator mounts that have been attached to the GG body in a heated area sometimes have yielded or cracked as a result of excessive thermal expansion. Locating the mounting flange above the injector in a cool area has reduced this problem considerably. Mounting designs that limited expansion motion to one direction developed loads in restrained directions that resulted in chamber and mount yielding and, in certain instances, cracking. In addition, unexpected loads that developed in the turbine manifolds necessitated reinforcing the turbine manifolds, with resulting weight increases and program delays.

2.1.1.6 Thermal Protection

Some early rocket engines used regeneratively cooled GG's to help retain structural integrity under conditions of excessive hot streaks; early F-1 engines had regeneratively cooled GG's. The added complexity introduced by the use of cooling jackets and the accompanying malfunctions and failures (plus added cost and fabrication time) have resulted in present GG's, including those for later F-1 engines, being almost exclusively uncooled.

Film cooling in a solid-wall, uncooled gas generator is crucial to durability. The cooling film is most important in the burning zone before mixing is complete. In general, thrust chamber cooling techniques have been used with good success in gas generators; reference 10 presents film-cooling design practices that are applicable to gas generators.

Radiation shields have been used successfully to protect components located near the gas generator, and insulation has also been tried. In one case with fiberbat insulation, a small failure was converted into a near disaster when a fuel leak soaked the insulation and then caught fire. This event prompted the use of sealed-surface insulation. Aluminum-foil-faced insulations were subject to punctures and to leaks at joints and also to inflation and blowout at altitude. A solution was found in a stainless-steel-faced, vented, molded-to-shape insulation cover. These preformed blankets were laced on.

2.1.1.7 Materials

As shown in table I, gas generators generally do not use exotic materials. The materials listed

have been satisfactory as long as good welding practices were followed.

Most gas generators operating in the 1200°F (922K) region have been made of relatively ductile 347 CRES. The relatively small Atlas sustainer GG (S-4) using 347 CRES operated successfully at 1400°F (1033K), although the operating temperature was later reduced to 1200°F (922K) to avoid coking. To achieve higher operating temperatures or to save weight, higher strength materials have been used. Both the J-2 and the F-1 GG's use Hastelloy C. Successful GG's have been made also from N-155, Hastelloy X, and Haynes 25, although Haynes 25 is quite brittle. Hastelloy B also has been used, but its "hot-short" characteristic (brittle at high temperature) has caused trouble. Turbine manifold experience with Rene 41 indicates that it could be used for GG bodies, but the potential fabrication problems would make the use of Rene 41 risky.

2.1.1.8 Fabrication

Gas generator chambers have been made both by casting and by forming and welding. Welding often is used for quick fabrication of chambers; frequently, castings are used to reduce costs. It has been found almost impossible to produce, by casting, the nonporous thin walls required for a high-temperature pressure vessel such as a GG. Experience with weld repairs of existing pores has been even worse; welding brings out new pores or leaves residual stresses that cause the casting to crack prematurely. Weld repair after firing with a coking-type fuel has been found to be very troublesome.

Chambers fabricated from formed, wrought metal welded into an assembly have been much more practical. Even with this method, welds can still be a problem, and use of a proper weld rod is mandatory. Type 347 stainless steel and Hastelloy W weld rod have been satisfactory; but Hastelloy B welds have been hot-short and cracked in test. Hastelloy B's hot-short characteristic is well known, and bodies fabricated of this material are not used at high temperatures; however, this weakness is sometimes overlooked when choosing weld rod for high-temperature materials. Weld cracking tendencies have been accentuated by lack of stress relief after both forming and welding. The introduction of normal stress relief procedures has reduced chamber cracking problems.

2.1.2 Injector

2.1.2.1 Injector Types

Combustion efficiency normally is not a problem with gas generators, because the large excess of fuel used in most GG's is readily available to the oxidizer. Combustion efficiencies of 100 percent are normal, and yet hot streaks resulting in wall overheating have been a basic problem in bipropellant gas generators. Hot streaks occur when the diluent is not

mixed with the reaction products. Lack of mixing is almost impossible to determine from characteristic velocity measurements, because the effects of the cool and hot zones accurately balance each other as long as there is no liquid involved. Effective mixing of hot and cool zones is a result of both good injector design and good chamber design.

Bipropellant GG injectors can produce either a hot-gas combustion region surrounded by a cold fuel sheath (a hot-core injector) or combustion region with a relatively uniform temperature distribution (a uniform mixture ratio (UMR) injector). A pure hot-core GG injector (figs. 1 and 5) is one in which all the oxidizer is injected near the center of the injector and enough fuel is injected in the same region to produce a mixture ratio reasonably near stoichiometric. The hot core gases are then diluted by the remainder of the fuel, which is injected around the outside of the hot core. A pure UMR injector injects propellants through each element at the overall GG input mixture ratio. Exactly the same processes of stoichiometric combustion and then dilution with the excess fuel occur as with the hot-core injector. With the UMR injector, however, there is a multitude of small hot combustion zones that are quenched quickly by the vaporization of the intimately mixed excess fuel. Other than at the microscopic level, the maximum local temperature may never even approach the stoichiometric temperature, the actual temperature depending on the element mixing efficiency and the relative propellant vaporization rates. As indicated in table I, UMR injectors have been used successfully in a number of GG's. A variety of minor variations and size changes has been made, but the basic original concept has not been changed much.

Figure 10 is an illustration of a UMR injector used in an experimental program; this injector is very similar to those used in the gas generators on the Atlas and Jupiter vehicles and H-1 engine. The injection pattern consists of 44 triplet orifice sets that provide two fuel streams impinging upon a single oxidizer stream flowing vertically. The usual GG mixture ratios result in the outer fuel orifices being larger than the central oxidizer orifice. These orifice sets may be arranged either in concentric circles or in various star patterns as required by detailed manifold design; no operational differences between the circular and star pattern have been found. With propellant combinations that operate at extremely low fuel-rich mixture ratios (e.g., monopropellant fuels used in bipropellant combinations), the oxidizer orifice size of conventional UMR element types such as quincunx or triplets becomes very small. This small size results in difficulties with orifice reproducibility and potential clogging from contamination. Even the hot-core-type Titan II 2nd stage GG uses a smaller ratio of oxidizer to fuel orifices than does the 1st stage, so that the oxidizer orifice size in the 2nd stage GG can be large enough to avoid the problems of small orifices. With N_2O_4/A-50, good results have been obtained with a 6:1 element with the oxidizer in the center, a design that reduces the number of oxidizer elements and thereby increases the orifice size. A more detailed discussion of flow and atomization characteristics of the triplet and other patterns can be found in reference 2; the injector designs therein, however, are applicable primarily to thrust chamber conditions, and interpretations for gas generators must be made carefully. The recent work on micro-orifice injectors for thrust chambers, reported in references 11, 12, and 13, indicates that such an injector probably would be very successful in gas generators.

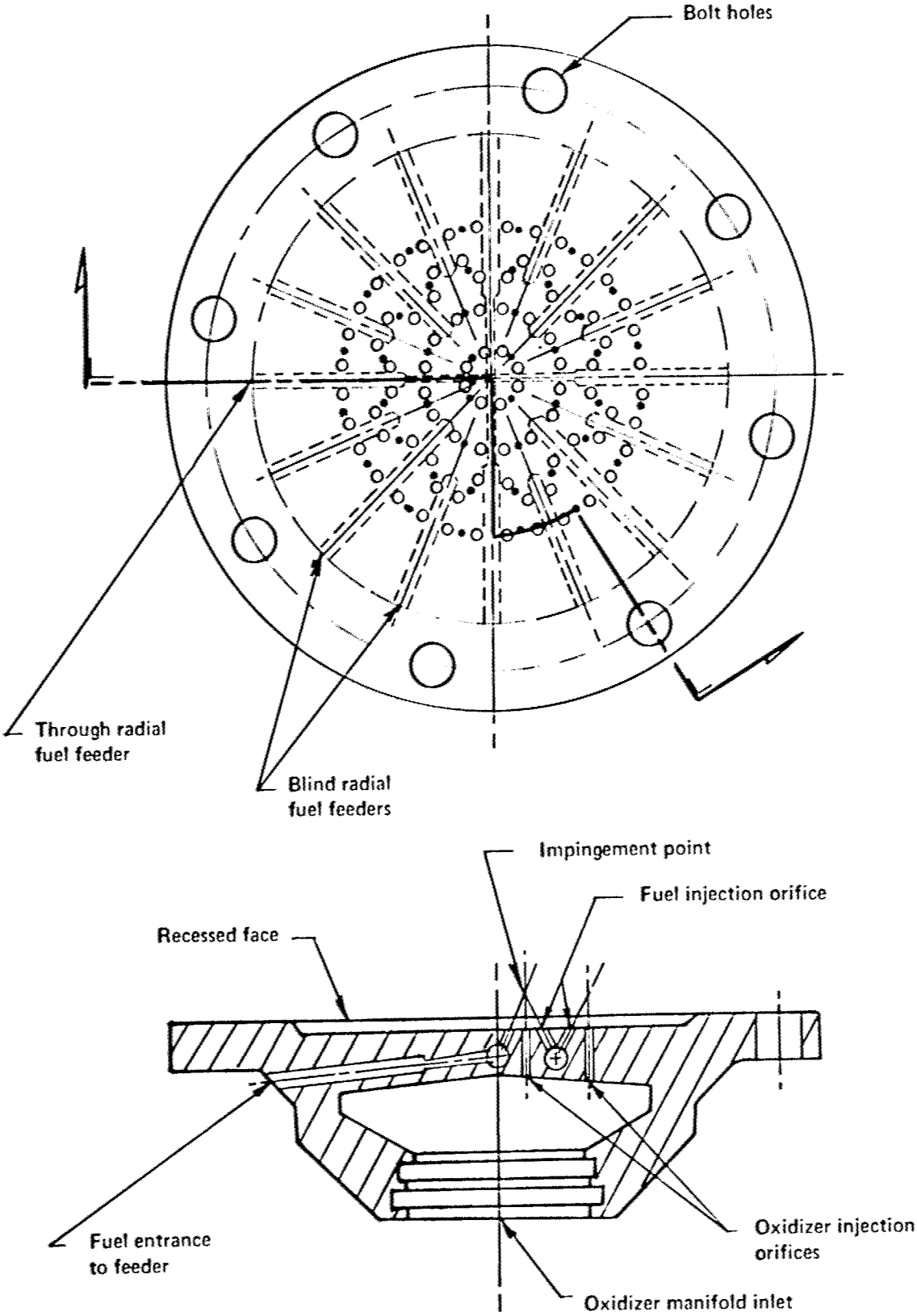

Figure 10. – Uniform mixture ratio (UMR) injector

With a gas generator that has a straight-through-flow body (like a thrust chamber), either a hot-core or UMR injector will produce reasonably cool gases along the wall, and the hot-core injector may even result in a maximum wall temperature not much above the fuel inlet temperature. The turbine, however, will not tolerate a gas with a gross temperature stratification, and any such stratification must be attenuated by dilution with the remainder of the fuel before the gas enters the turbine manifold. The elimination of this temperature stratification resulting from hot-core injectors has been a major problem in gas generator development.

Many gas generator assemblies are oriented so that the combustion gas must be turned before it enters the turbine manifold. With hot-core injectors, the act of turning the gases often results in wall burnout. Practically every hot-core gas generator (Navaho, Atlas MA-3, Thor, Jupiter, J-2, Titan I and II) has had a long and severe history of failures during development. On the other hand, no gross temperature stratifications that could result in turbine overheating problems have been produced with UMR injectors with small elements. Large, relatively slow- mixing elements such as the concentric tube element used for the M-1 have caused undesirable temperature gradients as far as 42 in. (107 cm) from the injector. Some pure UMR injectors have been used in research and development, but the production UMR injectors (such as the H-1) use some film cooling. The semi-UMR injector for the F-1 GG utilizes self-impinging doublets in a ring arrangement and also film cooling. The Atlas, Thor, and J-2 GG's all have core mixture ratios much higher than the overall input mixture ratio but still considerably lower than stoichiometric. The Titan I and II GG's inject all the oxidizer through the center of the injector and all the fuel through the outer portion of the injector face, so that the mixture ratio varies from infinite at the center to zero at the outside.

Most recent GG injectors have tended to be of the UMR type. The early hot-core injectors for Atlas GG's for the most part have been changed to UMR injectors or poppet-type injectors. The H-1 is a UMR type and, as noted, the F-1 is a semi-UMR type. The J-2 GG originally was designed with a UMR triplet pattern; however, a possible solid propellant turbine spinner requirement and the desire to eliminate gas purges during starting resulted in the use of a poppet-valve injector that produces a hot core. The M-1 used a UMR concentric-tube pattern.

The major difference between the hot-core and the UMR injector is, of course, the hot streaking tendency of the hot core, which is considerably less with a UMR injector. Although some hot streaking problems have occurred with UMR injectors, they have been an order of magnitude easier to solve than have those of the hot-core injectors. Other lesser differences have been found. The comparative testing reported in reference 14 showed that with liquid oxygen and RP–1, at a given mixture ratio, the UMR injectors produced a higher temperature and higher c*; at a given temperature, however, the c*s were the same. This finding indicates that the thermal processes in the two types may not be greatly different, although the apparent combustion efficiency is different. Limited experimental work has provided weak indications that, with hydrocarbon fuels, the hot-core injector may cause more coking than the UMR; with "energetic" amine fuels, hot-core injectors appear to be more prone to instability. Neither of these indications has been subjected to rigorous study or test evaluation.

In general, the obvious choice for a GG injector for normal propellants is the UMR design. In systems with serious contamination problems (e.g., where a solid propellant turbine spinner fired through the gas generator serves as an igniter) a poppet-type injector is used. The poppet injector is discussed in more detail in section 2.1.2.5.

2.1.2.2 Elements

Injector element types that have been used with fair success include the like doublet, unlike doublet, triplet, quincunx (symmetrical 4:1), and a variety of slot types. Nonsymmetrical elements such as the unlike doublet result in a highly nonuniform mixture ratio with bad hot-streak tendencies. Those elements that more uniformly enshroud the oxidizer in fuel (e.g., the triplet or quincunx) have been found to give minimum hot-streak tendency. Little work has been done to optimize the mixing produced by GG elements. Results of mixing studies of impinging injectors for thrust chambers are in general not directly applicable to gas generators, because the volume flow ratios normally used in gas generators are far outside the range of experimental data developed for thrust chamber injectors.

Concentric-tube injectors have been used to a very limited extent for GG operation. The primary example is the M-1 gas generator (ref. 15). While the results with concentric tubes are open to a variety of interpretations, one that fits most of the data is that the coaxial elements act much like a number of hot-core injectors in a single chamber. The high-shear flows improve mixing, and the smaller the flow per element the greater the similarity of the coaxial injector to the UMR injector. Recent unpublished work indicates good mixing with coaxial elements when the injector is operated at less than 0.5 lb/sec (0.227 kg/sec) total flow per element. Larger flows increase the similarity to the hot-core injector.

For UMR injectors, the gas temperature profile is smoothed out most quickly when the element produces rapid and symmetrical mixing. As noted previously, relatively-slow-mixing large elements have produced severe streaking far downstream of the injector; this was the case with large hydrogen-oxygen concentric-tube elements and large impinging elements (ref. 15). Small triplet elements operating with about 0.1 lb/sec (0.045 kg/sec) flow per element have produced a minimum of streaking.

2.1.2.3 Orifices

Drilled orifices are as widely used in gas generators as they are in thrust chamber injectors. The features and problems of both are similar, although uncooled GG bodies are much more sensitive to combustion gas streaking. Wall overheating commonly results from stray subjets of the minor (normally oxidizer) propellant due to stream misimpingement and distortion. The various causes of streaking are discussed in detail in reference 2. In gas generators, in contrast to thrust chambers, the most common cause of streaking (with a properly designed basic element, element distribution, and manifolding) is malformation of the orifice at the stream exit. Square-edge exits (fig. 11(a)) are the best. Symmetrical protruding burrs (fig. 11(b)) also control the stream but are hard to reproduce. Inward protruding burrs (fig. 11(c)) and rounded exits (fig. 11(d)) have resulted in misimpingement and wall overheating.

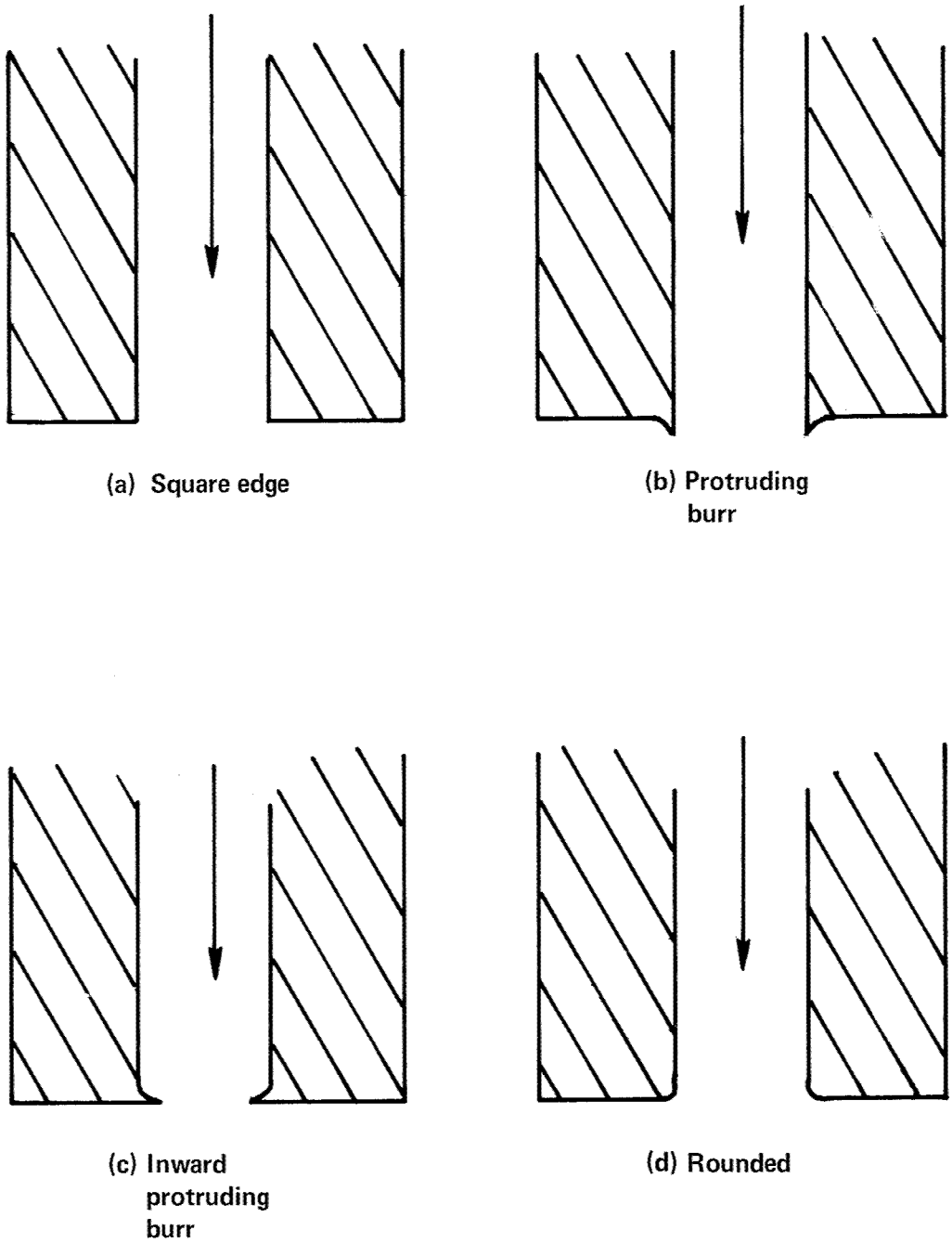

Figure 11. — Orifice exit configurations

Orifice edge conditions are strongly affected by the deburring operation. Common deburring methods such as hand cutters and oversize drills produce the distorted edges shown in figure 11(b) to (d). Better results have been obtained by more sophisticated techniques developed for producing burr-free orifices: multiple pass drilling, step drilling, broaching, and electrical discharge machining. No satisfactory method of removing a burr, once it has been formed, has been found. Not even surface grinding will produce a square edge in most injector materials, but instead will produce the edge shown in figure 11(c).

2.1.2.4 Film-Cooling Orifices

In most production hardware, there are enough irregularities to produce some upper chamber hot streaks, even with the best of injector design concepts. The simplest way of preventing trouble is to provide film cooling for the upper chamber. Film coolant often is applied by directed jets from the injector. In a GG similar to that shown in figure 5, the jets were directed at the upper wall and splashed off the wall. Cooling of the downstream end of the throat was marginal. Jets parallel to the wall cooled better, provided their edges were spaced about one orifice diameter away from the wall. Closer spacing apparently produced hydraulic jumps and rapid film dissipation. The interruption of the film by projections has been found very detrimental to wall protection. Surprisingly, cavities have less effect than might be anticipated if the flow in them is only rotational with no outflow. The rotational flow tends to form a surface matched to the solid surface and thus minimizes the disturbance to the main flow.

Film-cooling orifices usually are quite small and will hold a column of condensate water through surface tension in the orifice. In cryogenic systems, this water freezes and causes very serious coolant coverage problems. It has been found to be nearly impossible to clear a wet system by normal purge flows, and the finer the orifices the greater the difficulties. The use of purges has been beneficial when the purge is continued until the hardware reaches ambient temperature. Meniscus-modifying coatings have not been used but may be beneficial.

Boroscopes have been inserted through instrumentation or igniter bosses to check film-cooling orifices for water. Disassembly of the hardware has sometimes been necessary to clear the orifices. Orifices are self-draining of water if they are larger than 0.100 to 0.125 in. (0.254 to 0.318 cm) diameter.

2.1.2.5 Poppet Valves

With the introduction of solid propellant turbine starters firing through the GG or its duct (fig. 6), face-shutoff poppet-valve injectors were found necessary to prevent contamination of the oxidizer system. This contamination has caused both detonations in the injector and misdirected oxidizer streams that produced wall burning. The sealing effectiveness of poppets often has been poor, the poppet being more like a filter than a seal. Although this type of injector has been made to work successfully, the development cost has been much greater than that for more common injectors.

A great deal of effort has been expended on development of a family of several injectors similar to that of figure 12 for use with solid propellant turbine starters. All injector designs were based on the same principle of an oxidizer poppet held closed with a weak spring that would readily permit the injection pressure, acting over the poppet area, to hold the poppet fully open during steady-state operation. In early development models, the poppet sealed through the interference of two cones of different apex angles. The two surfaces formed the metering orifice when the poppet opened. The poppet travel (consequently the orifice size) was limited by the calibration position of the poppet retention nut on the stem. Because of the high forces involved, the stop surfaces took a serious battering, the result being a change in the size of the equivalent injection orifice and ultimately the engine calibration. The tight tolerances necessary for a uniform pattern resulted in the poppet jamming at unintended positions. Space was restricted so that long poppet guide systems could not be used.

Galling of the seat material became a problem with the conical surfaces. Soft sealant coatings were tried but, because the forces closing the poppet were high and the face temperatures were high, bonding or galling occurred. When the poppet opened, it would tear out parts of the soft seat and result in leakage. A later modification eliminated the conical seats and used a horizontal seal near the outside of the lip, the design being similar to that shown in figure 12. This change increased the seal diameter, so that the sealing force was much greater. The sealing was greatly improved but the uneven-metering problem remained, since metering now occurred at the outer edge. Another step in the development was the introduction of metering orifices such as shown in figure 12. The jets from these orifices splashed onto the poppet upper face and formed a horizontal sheet that varied in thickness, the sheet being thicker at each jet axis. It was found that for best operation the poppet must open wide enough to offer no restriction to the sheet at its thickest point. At one time, the soft sealing material was placed on the poppet but the disturbance to the sheet flow was found to be excessive. The soft seat was moved to the body with satisfactory results.

In the early versions of the poppet-face injector, the fuel side also was designed as a ring-slot injector. Very poor mixing was obtained, and hot streaks were erosive for long distances downstream. The very poor combustion, hot streaking, and roughness resulting from the use of fuel-side continuous slots indicated the need for interrupted injection streams. A ring of orifices was tried, but the openings were so close together that little difference from the previous ring slot was found. The orifices then were distributed in two rows, as shown in figure 12, with good results. Some benefit was found in aligning the fuel and oxidizer metering orifices even though the oxidizer jets impinged on the poppet.

The revised poppet form was quite bulky compared with the original design. Operating results showed impending trouble due to overheating of the poppet center and stem. A screwdriver slot in the center showed burning of the edges and there was some discoloration and binding of the stem. These problems were solved by making the poppet of copper instead of stainless steel. The poppet stem again was made of steel, but this time the stem was fluted to provide increased coolant flow and a larger exposed stem surface area, as shown in figure 10. This change, together with removal of the screwdriver slot, eliminated

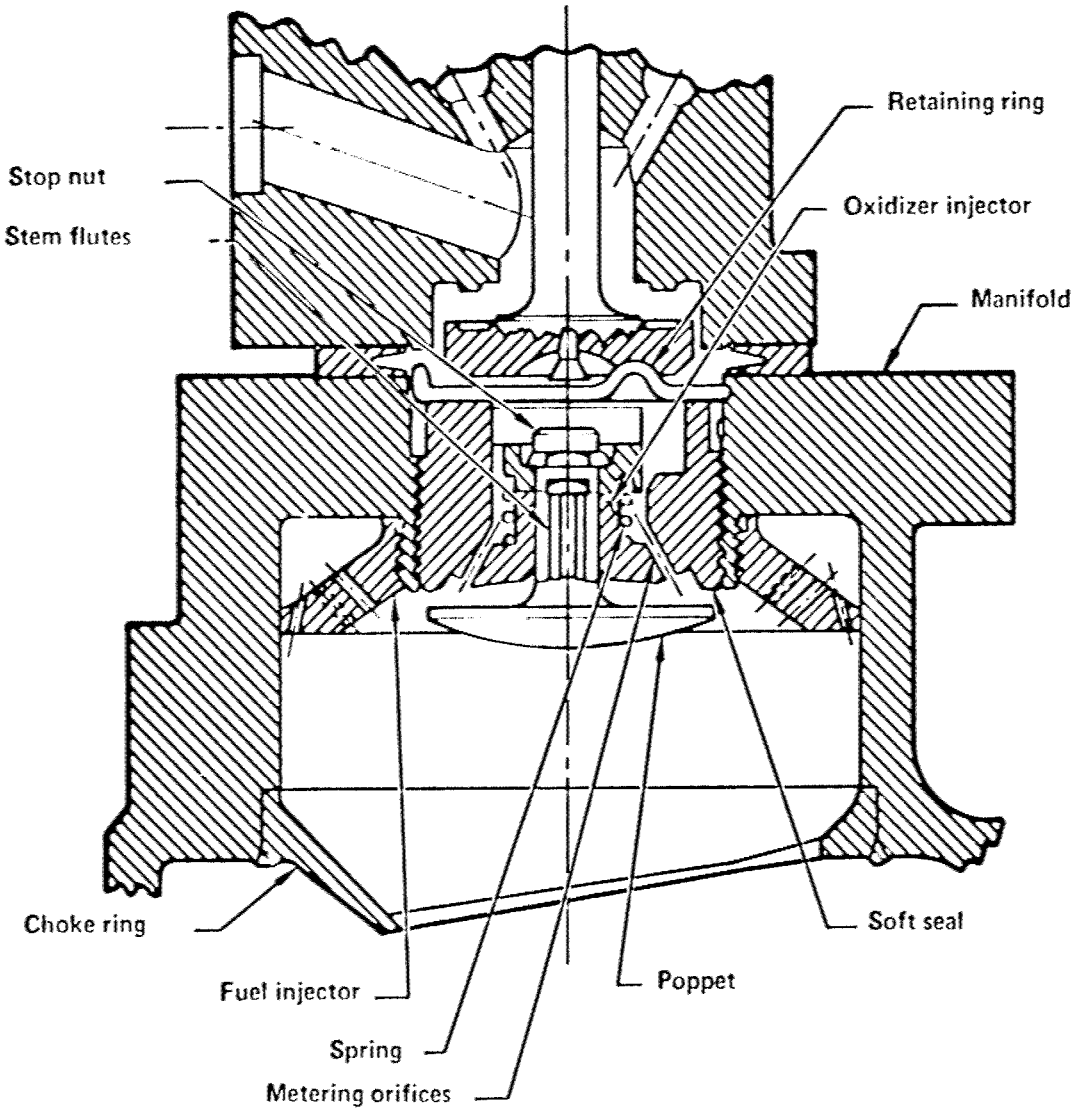

Figure 12. – Face-shutoff poppet valve injector (J-2)

overheating; assembly was accomplished by use of a pressure-friction pad. Refractory coating of the poppet was found beneficial but was not required after the above modification.

2.1.2.6 Manifolds

Manifold design has been central to several GG problems and their solutions: Cutoff temperature spikes are heavily influenced by manifold design; so also are ignition, hot streaking, valve sequencing, and contamination. Good thrust chamber injection manifold practice generally is applicable to gas generators. Past experience has indicated that manifolds that are long in the axial direction and restricted in diameter have given less trouble than manifolds that have a large diameter and are restricted axially. This difference results from the fact that in the former design the velocity head on entrance is dissipated before the orifice headers are reached. Particularly troublesome has been the characteristic of a radial inlet to oversupply both the area of initial flow impact and the 180° point of the manifold, while at the same time starving the 45° points. One approach has been to make the manifold entry tangential. A more detailed discussion of other methods is given in reference 2.

Manifold volume ratio affects the temperature spikes at cutoff. At start, the valves can be sequenced for a reasonable propellant lead, since very fast starts rarely are desired. To control post-cutoff impulse, however, the GG valves usually are shut as fast as possible, leaving both manifolds full of residual propellants. These residuals are critical to post-cutoff temperature transients. Two conditions are required for heat-spike suppression:

(1) The ratio of drainable volumes of the propellants in the manifolds must be such that temperature limits will not be exceeded.
(2) The manifolds must drain at a rate that does not cause excessive temperatures.

Satisfying the first condition usually is no great problem although, when one propellant moves slowly, the volume of the other propellant required to match it may be unexpectedly large. A usually satisfactory approach has been to restrict the volume of the minor propellant (usually oxidizer). With manifolds that could not be machined with balanced volumes, filler plugs have been used with good success. Designs providing about 50 percent more diluent than that required for rated temperature have been successful. In balancing residual storable propellants, it is necessary to exclude from calculation trapped propellants. Also, with storable propellants, it has been necessary on occasion to slope the manifold floors so that both propellants drain in close proximity to each other; thus, the mixing and reaction is quick and at acceptable mixture ratios. When propellants drain to different areas, destructive hot spots can form.

Satisfaction of the second condition is to a great extent a system problem. Some manifold tricks have helped, but the major influence has been in the system effects (ref. 1). After cutoff, the drainage of residual cryogenic propellants is to a large extent controlled by the

heat flow and vapor pressure. In assemblies where heating is rapid, the propellant clears rapidly, and the purge port may have to be restricted to prevent mixture ratio limits being exceeded after cutoff. Purge ports smaller than 1/16 in. (0.159 cm) have had a history of freezing troubles. With manifolds well chilled and thermally isolated, the cryogenic propellant may not clear for periods of minutes; in this case, larger purge ports are used to prevent delayed temperature surge. If no purges are used, heat transfer will determine the clearing rate. Ports of 1/4 in. (0.635 cm) diameter have been satisfactory for all other gas generators. The location of the purge tap in a part of the manifold and inlet system remote from the injector face has given the most consistent transient for all gas generators.

When a manifold was designed so that the initial flow of one propellant was over the igniter and the initial flow of the other propellant was on the far side of the chamber, several hard starts resulted. When both initial flows were in the igniter region, starts were satisfactory.

2.1.2.7 Interpropellant Seals

Injectors in which the propellants are separated by parent metal (such as integral-manifold injectors) have had little trouble with interpropellant leakage. In some programs in which there were frequent changes in the injector pattern and orifice characteristics, the injector face was removable, and a seal between propellants was used. Interpropellant leakage then became a problem, and the interpropellant seals became critical. The early center seal system (fig. 5) was troublesome, because the oxidizer was cryogenic and the inner seal was subject to frequent leaks. The injector was thinned near the end of the post to increase the heating of the post and the seals, but the improvement was marginal. Later designs (figs. 6 and 7) provided that both seals be contained in the relatively warm injector; this design worked quite well. The contained cavity was vented by a passage through the face of the injector to the outside of the flange. With hypergols, slight leakage resulted in slight burning of the O-rings, although in a limited number of tests no hardware damage resulted.

Later GG designs such as that for the J-2 have had removable faces without requiring an interpropellant seal. The F-1 gas generator requires a relatively complex distribution system because of the large flowrates involved. A ring-type manifold system provides the distribution and simultaneously provides parent-metal propellant separation. Rings can be removed and replaced to provide injection modification, although the change is not as convenient as it is with the simpler removable injector of figure 5. Of course, the best practice is to eliminate all interpropellant seals and use parent metal between propellants.

2.1.2.8 Injector Materials

The most common materials for the GG injector face are stainless steel, N-155, copper, and aluminum. Nickel would seem to be a competitive material but has seldom been used. The major injector material problems have resulted from chemical incompatibility and high temperatures. Materials that corrode easily, such as high-strength steels, cannot be used. Little is known about detailed heat transfer mechanisms in the combustion region near the injector face, and predictions of injector heating are very unreliable.

Minimization of weight often results in the choice of aluminum as the injector material. Although many satisfactory injectors have been made of aluminum, aluminum readily melts, burns, or softens in operation. In one case with oxygen, overheating that resulted in face burning and melting was prevented by a thick anodize coating on the face. A new problem arose when the anodizing changed the downstream edge of the orifices and changed both the pressure drop and combustion characteristics. Masking 1/32 in. (0.0794 cm) around each orifice during anodizing prevented the edge problems.

Nitrogen tetroxide and nitric acid with amines, hydrazines, and ammonia have been used extensively and successfully with aluminum injectors in the thrust chambers. Aluminum injectors in thrust chambers operating with fluorine and interhalogens have ignited and burned out. Large aluminum ring-type injectors in thrust chambers operating with oxygen have been completely gutted by ignition of the aluminum. Both oxygen and fluorine, however, have been used successfully with aluminum injectors at relatively low face temperatures. Low face temperatures are difficult to predict, but are associated with minimum circulation space and well-distributed propellant orifice surface area for liquid cooling.

OFHC copper has been used successfully to prevent injector face overheating, although there is a weight penalty involved. The choice of copper for an injector material requires a compromise among strength, thermal conductivity, and cost. The first two factors are somewhat inversely related: the higher strength copper alloys in general have lower thermal conductivity. In addition, the high operating face temperatures have caused a change in grain structure: grains in both copper and nickel injectors have enlarged. In one instance, the grains in a chrome-copper injector enlarged until some were nearly 1/2 in. (1.27 cm) in maximum length. The grain boundaries became crack sources, and the injector failed. Some copper alloys, such as zirconium copper, do not demonstrate this grain growth phenomenon and have operated successfully. Careful inspection of copper and nickel injectors for hot spots after testing can sometimes reveal potential grain growth and resulting structural problems.

Copper has had a variety of compatibility problems when exposed to amines, ammonia, hydrazines, nitric acid, or oxides of nitrogen. With nitrogen tetroxide, copper injectors between runs have been subject to corrosion due to water vapor combining with nitrogen tetroxide and forming acid. Copper orifices of thrust chamber injectors with a hot face also have been chewed up badly by chemical attack during operation with nitrogen tetroxide. Fluorine, while not too detrimental at room temperature or lower, readily ignites copper at 1227°F (937K). Exposure of the fluoride film to moisture in the atmosphere on shutdown has resulted in progressive copper attack. Copper has benefited from platings in four ways:

(1) When a copper injector is used with ammonia-containing propellants, or with nitrogen tetroxide and the face is heated, plating keeps the copper from dissolving. Electroless nickel plating is the only known method of evenly plating the orifice bore. Chrome plating has been adherent in areas of low thermal expansion.

(2) When fluorine is the propellant, the ignition of the injector face material is a major problem because copper ignites at a relatively low temperature. Nickel ignites at a much higher temperature and, when plated on copper, increases the ignition temperature of a copper injector. Thoria-dispersed nickel is not measurably attacked by fluorine below 2000°F (1367K) and also is a good plating, although experience is very limited.
(3) Handling damage has been reduced by hard plating of the contact surface.
(4) Electrolytic corrosion discolorations can be eliminated by selecting the proper platings from the electromotive series, according to common anticorrosion practice. These corrosion discolorations often disturb inspectors and cause hardware rejection, although normally they are not detrimental. Flaking or peeling of platings on copper has not been a problem as it has on other materials such as steel.

Stainless steel, both in solid form and as Rigimesh, has been successfully used as GG injector material. It has a relatively high ignition temperature, does not require a protective coating, and is readily fabricated. With high local heat-transfer rates, the low thermal conductivity of stainless steel can result in local hot spots.

Nickel has been used successfully in thrust chamber injectors with fluorine, the interhalogens, nitrogen tetroxide, oxygen, hydrogen, and various mixed hydrazine fuels. Nickel can be used with nitric acid, but only with caution; under some conditions of temperature and long term contact, chemical attack of the nickel by the acid can be serious. Inconel X and Inconel 718 have been used with hydrogen and oxygen successfully.

High-performance propellants usually are very reactive and are incompatible with most materials at operating conditions. Material modifications frequently cannot solve face overheating problems, and other techniques must be used. Some of these techniques are presented in reference 2.

The relatively soft copper and aluminum materials used in many GG injectors make them highly subject to handling damage. In the shop and assembly areas, injectors are set down, dropped, and scraped across such hard surfaces as machine ways, bench edges, and other pieces of the gas generator. This kind of handling has resulted in distorted orifices with resulting changed stream characteristics and also in scratches across seal surfaces and resulting hot gas leaks during operation. Recessing the face and seal surfaces of injectors has largely eliminated face and seal damage. Although recesses of as much as 1/2 in. (1.27 cm) have been used, as little as 1/16 in. (0.16 cm) is normally satisfactory.

2.1.3 Accessories

2.1.3.1 Igniter

Most propellants used in gas generators will not ignite spontaneously. These fuel/oxidizer combinations require an external source of energy that can sustain ignition of the fuel-rich

mixtures commonly used. Ignition delay (failure of the ignition method to produce prompt ignition) has been a problem in some gas generators.

Early gas generators used two types of igniters: glow plugs and pyrotechnic cartridges. The glow plugs, when adequately protected from the flame, produced excessive ignition delays and were easily quenched; the pyrotechnic devices were subject to difficulties in sealing the initiator wires and to dampening of the charge by moisture. However, the pyrotechnic devices replaced glow plugs in most GG designs. Some applications have used spark plugs; problems with these devices are discussed later.

The best location for an igniter was found to be within about an inch (2.5 cm) of the injector face, where the mixture is quite stratified and the location is not too hot during normal operation. It was also found helpful to locate the igniter where both propellants arrive simultaneously. Opposed manifold inlets produced difficult ignition conditions because of poor local mixture ratios.

Igniter efficiency is subject to the effects of manifold initial flow stagnation and low orifice flow (i.e., high cross velocity in the manifold on the back face of the injector). Igniters located below stagnation areas usually work well; those below high-cross-velocity areas can produce long ignition delays.

Propellant sequencing also influences ignition. Usually it is easiest to ignite a slightly oxidizer-rich mixture; however, the transition from oxidizer-rich gases to the normal fuel-rich gases can be a problem. As a result, most gas generators ignite fuel-rich stratified mixtures.

As can be seen in table I, most gas generators use pyrotechnic igniters, and usually two are used for high reliability. Where igniters can be chilled and repeated starts are required, as on the J-2 engine, spark plug igniters are used. Early problems with spark ignition led to an intensive study of the method, which brought out several important factors:

(1) The surface-discharge type of plug produces a reliable spark.
(2) A shrouded gap with an orifice at the tip produces a hot jet preferred for ignition. This jet should be transverse to the injector streams.
(3) Plug tips that protrude into the chamber often burn or cause burning downstream. Plug tips that are recessed seldom overheat and yet provide reliable ignition.
(4) Space ignition has not been a problem, since the GG is pressurized by the turbine spinner gases and gravity is provided by the ullage settling rockets.
(5) Liquid hydrogen is more difficult to ignite than RP-1 because of the colder temperatures and the higher spontaneous ignition temperature (about 1000°F (811K)), whereas RP-1 can ignite with gaseous oxygen at room temperatures.

Detail igniter design is a field in itself and will not be treated further here.

2.1.3.2 Igniter Boss

Igniters used in gas generators usually require electrical connections, and these connections normally involve the use of a glass or ceramic-to-metal seal. These seals have developed hot gas leaks, even in a single run, when subjected to high temperature and pressure. Bosses are often welded to the chamber wall with a large weld bead, the result being ineffective cooling of the boss by the injector but strong heating from the chamber wall. This problem has been overcome by welding the boss to the chamber flange at the injector end, with a minimum heat path to the hot portion of the chamber walls.

Figure 13 shows such an installation, the boss being thermally coupled to the chamber flange and isolated from the body as much as possible. Such a design would not be possible with bosses located further downstream. The added stagnant-gas length produced by adding a boss to the flange rather than by putting the seal directly on the flange also is helpful in reducing seal temperature. Some designs with a stagnant-gas L/D of about 4 or 5:1 have been successful even without an added boss.

2.1.3.3 Flanges

Most gas generators have been designed with a flange for attachment of injector to chamber. This flange expedites component replacement during development but it also is a source of trouble, predominantly flange seal leakage and cracking or yielding of flange material by overheating. An additional difficulty arises from the fact that injectors often are made of relatively soft materials that get even softer when heated. Seals with sharp edges (e.g., chevron seals) mark the flanges seriously. Then, on reassembly, the seals cannot be aligned perfectly in the old marks, and leaks and fires result. The K-type seal is an exception because the heavy bar makes an impression that is used as a locating recess when reassembly is done carefully. Hard platings on most metals and hard-anodize coating of aluminum minimize this marking problem. With a hard-anodize surface, the sealing characteristics are improved by grinding the surface smooth, since the coating surface is rough and porous.

In many cases, the gas generator is purged postrun, and this purge flow normally is sufficient to prevent damage to Buna-N or butyl O-rings. When no purge is made or the purge is inadequate, more drastic measures must be taken. Propellant-compatible, high-temperature O-ring material such as Viton A and, for short periods, special fuel-resistant silicones have proved successful. Pressure-actuated metal seals (such as K-seals and U-seals) have been satisfactory, particularly in hydrogen systems in which O-ring seals have been leakage prone. Other successful measures have included thinning the body wall and thickening the manifold wall to minimize the high-temperature reservoir and conduction area and to maximize the low-temperature reservoir and conduction area. Direct heat-blocking methods such as incorporating insulating layers (fig. 14) or air gaps (fig. 15) have been used with good success. The insulating layer of figure 14 may be an insert of high-temperature insulation material. Heavy anodizing of an aluminum injector in the flange region also has been used to increase thermal resistance. Eliminating the injector-flange-to-manifold seal by welding this joint has solved the seal leakage problem in a direct and permanent way.

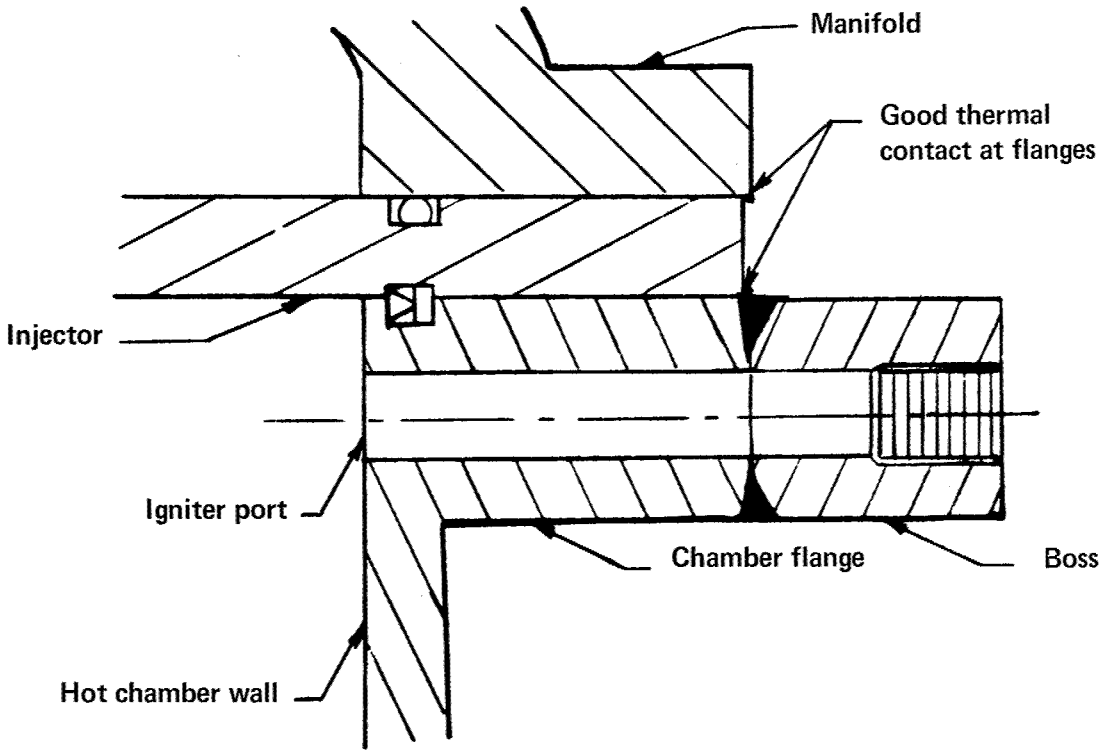

Figure 13. — Igniter-boss installation

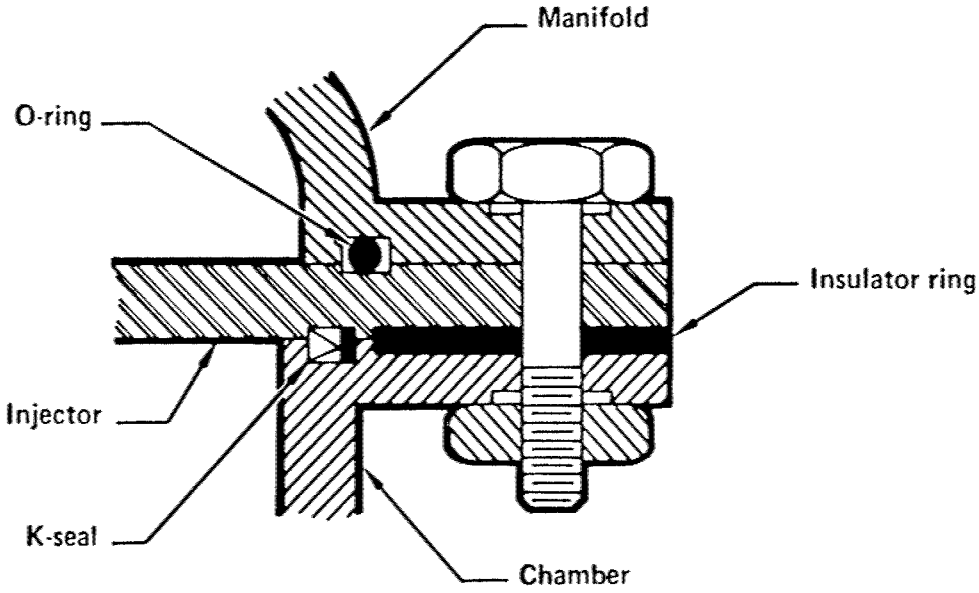

Figure 14. – Insulator heat block

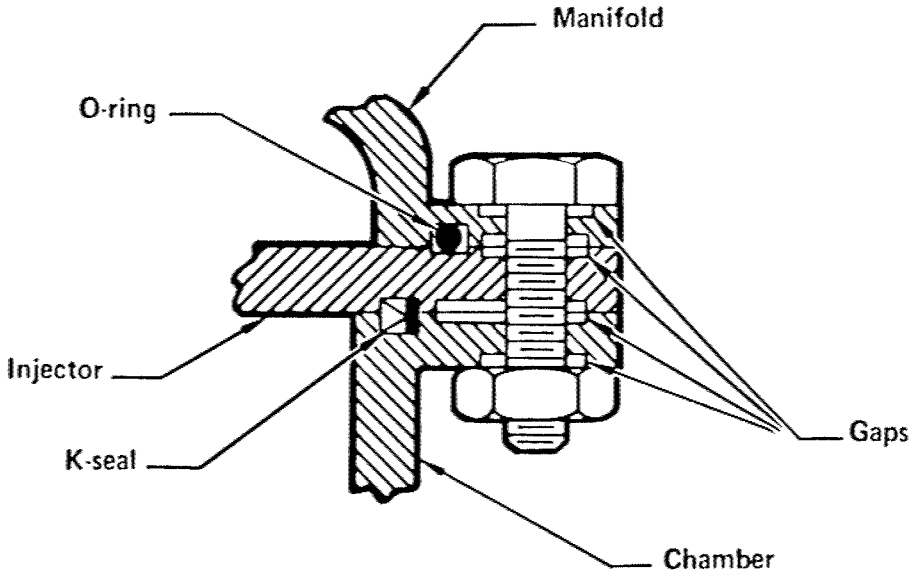

Figure 15. – Airgap heat block

Injector assemblies with O-ring piston seals (fig. 6) are often difficult to disassemble after use, because of the wedging of the O-ring. Mechanics often use a screwdriver as a wedge to separate the injector and manifold, and in the process scratch seal surfaces and bend or break flanges. Equally spaced, tapped holes in the injector flange that will take jacking bolts have eliminated this problem. These bolts bear on the manifold flange and force the flanges apart. Both two or three equally spaced holes have worked, the choice depending on the location of other flange features.

2.1.3.4 Fasteners

Most operational gas generators are held together with bolts, although there is increasing use of welding. In a program that requires extensive development, bolted assembly permits the expeditious changing of GG's and GG parts.

Several different fasteners have been used on GG injector and exhaust flanges with good success. There have been a few cases where the flanges warped or the fasteners relaxed the flange loads, and leakage resulted. Fastener relaxation develops when short fasteners are torqued to the required flange load and therefore do not have much margin of elastic deflection left, i.e., they cannot stretch elastically to withstand further elongation resulting from transient thermal growth. Because of the nature of the bolted flange, the bolt heats up more slowly than the flange material, and thus the bolt is subject to unusually high loads of a transient nature. By increasing the fastener length, more total elongation is available to absorb this transient growth without yielding the fastener. A limited investigation of an assembly similar to that shown in figure 16 indicated that a total elastic deflection of at least 0.020 in. (0.051 cm) in the total fastener length is needed to prevent yielding. A similar approach reportedly has been used in foreign rocket equipment.

A sleeve similar to the washer stack was tried with good results, but use of a thick flange did not give good results, possibly because the thick flange heated up as a unit while the sleeve and washers with their contact resistances did not. A few springs were tried, but all relaxed too rapidly in service. Insulated springs were not tried.

It is common knowledge that better flange loading is obtained by using many small fasteners rather than a few large ones. Because of the requirement for bosses at the flanges (sec. 2.1.3.4), the optimum fastener span often cannot be met, and larger fasteners must be placed as close to bosses as possible so that adequate flange loads are maintained. Moreover, in some cases, the fasteners may be placed so close together that wrench clearance is inadequate. In the Thor gas generator, bolts were placed so close to the bosses that an ordinary wrench could not be used. A special thin-wall, box-end wrench was required; and this condition produced problems of availability of the wrench. Internal-wrenching bolts very close to bosses and other fasteners have been used in experimental hardware with good success.

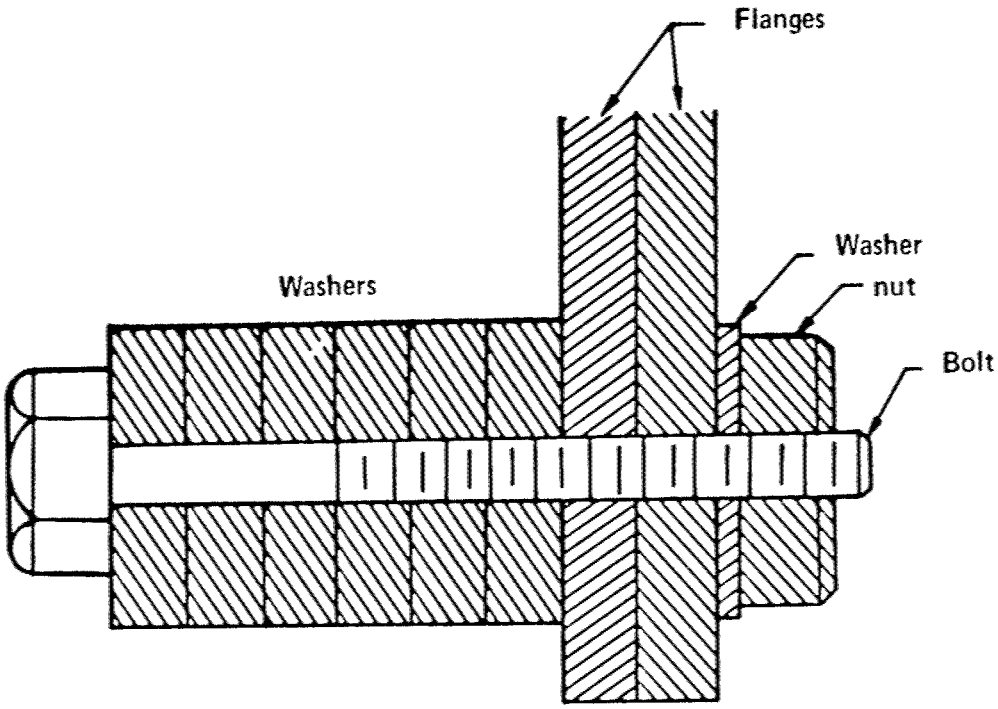

Figure 16. – Elastic fastener assembly

Most high-temperature fasteners used in gas generators have been stainless steel, because of the relatively high strength of stainless steel at GG temperatures. In one application, a stronger material was needed and special bolts were made. In development service, some of these bolts were replaced improperly with stainless steel bolts that looked the same as the stronger bolts but yielded in service and allowed the seal to leak. Later, bolts were marked with paint; however, the paint came off with handling. Integral permanent marking was required to differentiate between bolts. Internal-wrenching features can mark a special bolt so it can be recognized, but other markings must be used if internal-wrenching bolts of standard materials are used elsewhere in the engine or facility.

2.1.3.5 Auxiliary Injectors

Because most gas generators are uncooled, they are very sensitive to hot streaks in the flow. Hot-core injectors are prone to produce very hot streaks that are almost impossible to penetrate with free jets of diluent. These hot streaks become critical and cause hardware failure if they persist to the turbine or to the bottom of a flow-reversal-type chamber. Heavy, long-stream fuel jets have been tried in an effort to break up these hot cores; results were poor. Success in cooling the streak has been achieved only by mechanically penetrating the hot stream with an auxiliary injector, and then spraying the fuel into the stream from the inside.

Two circumstances of hot streaking require special auxiliary injector configurations. The first condition is a low-momentum, fairly diffuse hot stream that is rather easy to dilute quickly and that does not disrupt a liquid sheet. In this circumstance, an Enzian-plate type of injector such as shown in figure 17 has been successful. In this design, fuel is piped from the main injector manifold to the auxiliary injector inlet. The fuel goes through the metering orifices and splashes on the Enzian plate, thereby producing a horizontal sheet. The sheet will protect a large surface area against a low-momentum hot flow. The second circumstance is that of a high-momentum jet of very hot gases (there is no definite dividing point between the conditions) that will disrupt a stream or sheet readily. In this situation, the sheet produced by the injector of figure 17 is readily disrupted and offers little protection to the walls. For this condition, a counter-current spray nozzle on a probe (fig. 5) has worked successfully. The swirl-nozzle atomizer produces a conical spray that is directed against the main flow, and the long stem places the spray far enough from the endangered surfaces so that mixing and cooling of the hot stream can occur before uncooled materials are reached. The conical spray is required to distribute the coolant broadly throughout the hot stream. The required coolant penetration is comparatively short. Both this configuration and the one shown in figure 17 have worked with less than 10 percent of the total fuel flow being used. The exact limit must be determined by experiment for each case, as must the boundary between the circumstances. The detail design of these two auxiliary injectors is based on common injector design practices and is not considered critical.

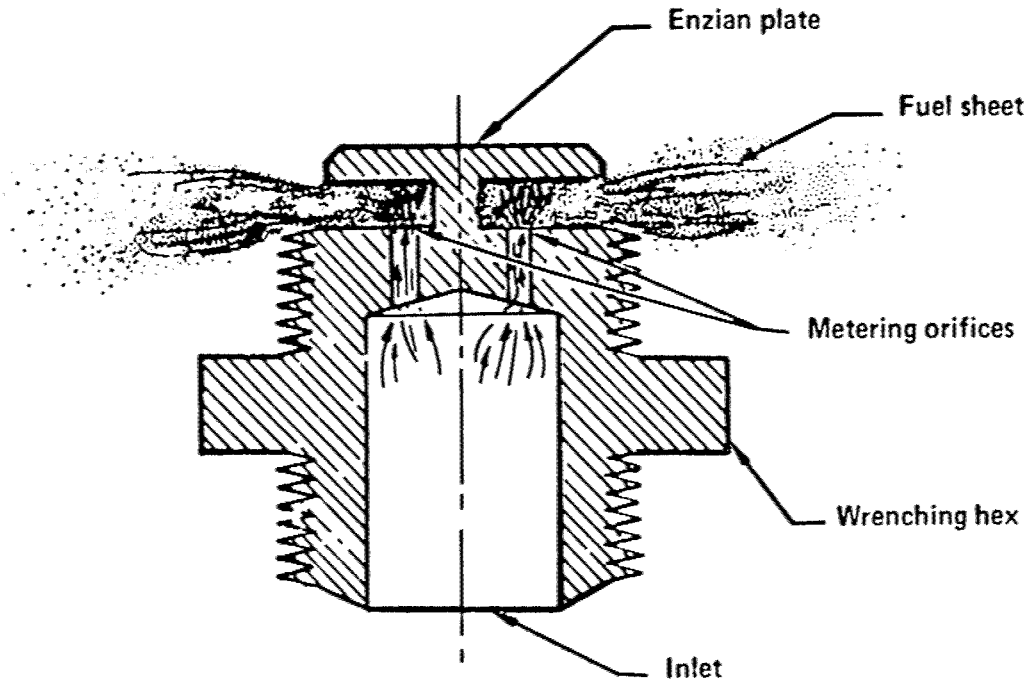

Figure 17. – Enzian-plate auxiliary injector

2.1.3.6 Drains

Engines with nonvolatile fuel or combustion products often have had trouble with injector contamination. A reverse-flow gas generator increases the problem by serving as a trap in itself. During handling, the engine often is held in unusual positions, but usually it is in either the erected or transport position when serviced. Considerable difficulty has been encountered when trapped propellant from the GG and turbine drained into the side of the GG chamber while the engine was in the transport position; normally there is no way of draining this propellant. In one case, drain bosses were installed in both the back (or side) and bottom of the GG as shown in figure 9 so that the GG could be drained in either position; the frequency of contamination was greatly reduced. Drain boss design details are not critical.

2.2 Monopropellant Gas Generator

As shown in table I, the use of monopropellant gas generators in rocket engines has been very limited. The gas generators for older engines used hydrogen peroxide (H_2O_2) because performance and weight then were secondary to simplicity. Attempts to use higher performance hydrazine (N_2H_4) were abandoned before much information was obtained. In addition to H_2O_2 and N_2H_4, several other monopropellants are widely known, e.g., ethylene oxide, isopropyl nitrate, and acetylene. These materials, however, have not had significant use in turbine-drive systems in this country and will not be covered herein.

Although recent work on H_2O_2 has not been extensive, a large amount of work has been done on N_2H_4 for thruster applications. In fact, the development of monopropellant reactors in recent years has been almost entirely for thruster applications. Much of this information can be useful in the design of future gas generators; however, the GG designer must be careful about applying thruster information directly to GG applications. The differences of design philosophy between thrusters and gas generators for turbine-drive systems are subtle and not widely appreciated.

The following paragraphs are directed toward the design of monopropellant gas generators for turbine-drive systems; the material presented is based primarily on experience with those systems. As a result, the considerable body of thruster information is not covered. This information is widely dispersed among the various program reports; however, the GG designer should familiarize himself with as much of this material as possible.

2.2.1 Chamber

Monopropellant gas generator chambers have been of two general types:

Bed reactor – The chamber is nearly filled with a solid material that assists decomposition either by catalytic or thermal action.

Thermal reactor – The chamber is empty, and convection processes are depended on to promote the decomposition reactions.

Hydrogen peroxide chambers usually are the bed type. Thermal-reactor-type chambers could be used with liquid permanganate catalyst, but the permanganate-feed-system complexity usually is not worth the effort. Bed-type chambers are relatively simple and troublefree.

Choices for hydrazine-decomposition chambers are less well defined because of the extremely limited application to turbine-drive systems. A wide variety of problems have not yet been resolved; however, some insight has been gained, and the future potential of hydrazine gas generators suggests that an extensive discussion be presented.

One major reason chamber design for hydrazine gas generators has not settled on a dominant type is the variety of additives mixed with the hydrazine. These additives have been used to depress the freezing point, to stabilize the hydrazine and prevent thermal decompositions in the thrust chamber cooling jacket, to reduce gas temperature, and to promote ignition. All except the ignition-promoting additives have either prevented decomposition or made the decomposition process more difficult. Ignition-promoting additives usually result in excessive gas temperatures.

With well-stabilized mixtures, it usually is necessary to run with a very small oxidizer flow that serves as a pilot light and prevents quench-out of the reaction. This pilot light also has a significant effect on the exhaust-gas temperature. With 90/10 mixtures of hydrazine and either ethanol or ethylene diamine, the reaction is stable only above 1700° to 1900°F (1200 to 1311K). Below these temperatures, operation is characterized by extreme pressure pulsations, as if the reaction quenches out and restarts repeatedly. For mixtures of 50/50 N_2H_4-UDMH and for pure UDMH, operation is stable at temperatures down to 1650°F (1172K) and 1400°F (1033K), respectively. These data are for specific hardware configurations (refs. 16 and 17); with other configurations, some differences in limits can be expected. However, the observed instability is so strong that it is doubtful that the reaction can be stabilized by varying the configuration. Occasionally one hears reports of stable operation at low temperatures, e.g., operation at temperatures of 200° to 500°F (367 to 533K) with N_2O_4-UDMH has been reported (ref. 17). However, it was found later that the gases were not in equilibrium and contained considerable unvaporized UDMH, which served as a pulse damper.

Some recently developed mixtures have achieved stable monopropellant operation with the Shell 405 catalyst. Considerable information on these mixtures has been generated in the thruster and auxiliary power systems fields. To date, none of these mixtures has been used in turbine-drive systems of flying rocket engines, so they will not be covered here.

2.2.1.1 Size

The sizing of bed-type chambers for monopropellant gas generators is more complex than sizing bipropellant thrust chambers. The usual sizing parameters of L* or c* are not representative of bed design and are not used for detail design.

For H_2O_2-type gas generators, the flow rate per unit area has been used for sizing; values of this parameter are given in reference 18. Unfortunately, this parameter does not define bed depth. Various GG's have used bed depths from 1/2 to 6 inches. Most large units used on flight engines have had bed depths in the larger half of this range. The H_2O_2 concentration also has an influence on bed depth: lower concentrations require greater bed depths; this effect has not been quantified. Past practice shows a preference for chambers of about twice the volume of the catalyst bed. Highly compact designs have given trouble from excessive heat conduction. The volume above the catalyst bed is very beneficial in reducing heating of the injector and valve, thus preventing manifold explosions. In addition, this over-bed volume permits better distribution of the H_2O_2 with simple stream injectors, because splash from the surface impingement helps redistribute the incoming propellant and thus prevents bed channeling by heavy confined propellant streams.

The sizing techniques used for hydrazine gas generators are confused by a combination of techniques directed toward thruster design (limited heat input, temperature control secondary) and faulty techniques (direct temperature measurement, unstabilized carrier porosity). The foundations for precise design were established by Grant (ref. 19). This work concentrated on pure hydrazine and gave an accurate way to design for a predetermined temperature and pressure drop across the bed. The major point in this design approach was recognition of the extreme errors inherent in the use of thermocouples to measure gas temperature. Errors of hundreds of degrees are probable with measured temperatures, and consequently chamber sizing based on measured temperatures will produce erratic and confusing results. Grant measured composition and developed a sizing technique based on thermodynamic temperature. The difference between measured and thermodynamic temperature is variable and cannot be related consistently. The procedure presented in reference 19 is the best available for sizing a N_2H_4 gas generator. Since the development of the Shell 405 catalyst (ref. 20), other sizing systems have been attempted; however, the details of the procedures have not been presented in depth, and superiority over the methods of reference 19 is not readily apparent. One of the more extensive studies using Shell 405 is presented in reference 21.

The higher reactivity of the Shell catalyst has caused crushing of the catalyst carrier. Strengthwise, the Shell carrier is not greatly different from the JPL catalyst carriers, so the prediction can be made, based on Grant's approach, that increasing the stay time in the

upper bed by 10 percent will prevent bed crushing. Some catalysts use a stronger carrier with active materials similar to those of the JPL catalyst. They resemble well-used JPL catalysts from a porosity standpoint. The reference 19 method of sizing, with allowance for the reduced porosity, is as good as the later techniques and also has a better basis in fundamentals.

With hydrazine gas generators, as with the hydrogen peroxide type, it is advisable to use a chamber volume twice the volume of the catalyst bed. This is contrary to the practice used in thrusters where response and decay time are important; but the smoothed flow profile assists in preventing the channel flow and local crushing that results from the long-duration flows common in GG applications. If very small (<0.010 in. (0.025 cm) diam.) injection orifices are used or if highly atomized injection is achieved by other means, this excess volume can be reduced to the minimum necessary to achieve even flow distribution.

Even though the above discussion was based on experience with commercially pure hydrazine, the approach probably can be used with the newer propellants under development, provided that there is some modification of the scaling values. These new fuels have been used primarily in thrusters and auxiliary power systems; the literature in these fields should be consulted when one is designing a gas generator for turbine drive. The modifications in Grant's method necessary to make it applicable to these newer fuels is beyond the scope of this monograph.

2.2.1.2 Heat Control

Some monopropellant gas generators have had troubles from unexpected heat flow. When catalyst packs have been allowed to chill, the starting has been seriously delayed or prevented. The starting surge following a delayed start sometimes has been catastrophic. Catalysts have been cooled by nearby cryogenic propellant lines as well as by environmental temperatures. The exact minimum temperature for proper operation depends in a poorly understood way on both the catalyst and propellant. Hydrogen peroxide catalyst of the silver-screen type is particularly easy to chill because of the relatively high bed conductivity. This high conductivity makes heat management extremely difficult, and both manifold and valve explosions have occurred.

A slightly different problem has arisen with hydrazine. The higher temperatures of the catalyst during operation produce a high heat flux to the wall and thus high wall temperatures. The hot walls, by conduction, heat the injector and propellant feed system. If the injector flow is not high enough for adequate cooling, the injector and feed system can be heated to the point of decomposition of the hydrazine, the result being pressure pulses or explosions and hardware damage.

A good way to isolate the catalyst thermally from the chamber has not yet been demonstrated. Discussions of this problem have suggested that the use of a canister for the

catalyst would provide, among other benefits, a contact resistance or a cooled-gas boundary between the canister wall and the chamber wall that would tend to provide thermal isolation of the catalyst. The problem of injectors used with hydrazine is discussed in more detail in section 2.2.3; however, work with a hydrazine gas generator similar to that of figure 18 and results of other programs show that injector heating can be influenced by chamber design. The flanges and upper dome in the GG represented in figure 18 were relatively heavy. A higher dome with thinner walls would have prevented some of the overheating of the injector parts. Flange heating could have been reduced by the methods discussed in section 2.1.3.1.

2.2.1.3 Trays and Retainers

Most monopropellant gas generators have been designed with a cylindrical catalyst bed, as shown in the hydrazine GG of figure 18 and the hydrogen peroxide GG of figure 19. In poorly supported designs (fig. 19), the bed pressure drop can easily become too high, and then flow channeling and catalyst crushing become problems. This pressure drop is worst in long, thin bed designs. The problem usually is overcome by using several trays to support the catalyst as shown in figure 18. The simplest design would be one large shallow tray (as estimated from ref. 19), but the size of such a design usually is excessive. Most good GG designs have several trays that are locked in place. Each tray takes nearly the limiting pressure drop that is allowable without crushing the catalyst, as specified in reference 18 for hydrazine. When the trays are locked in place, starting pressure surges do not unpack the bed and thereby cause powdering and pressure-surging problems. Most trays have been designed to be stiff enough to resist this unpacking surge; however, screen trays were found to be too flexible for adequate bed restraint. Most trays made from 1/4 in. (0.635 cm) or thicker material have been structurally adequate. The design of clamping devices is not critical if springs are not used for loading; springs have been found to relax during operation and cause pressure instability. When the catalyst beds have been kept under compression at all times, problems resulting from bed unpacking have been minimized. For large spans, bed support posts (fig. 19) have been required.

With very large gas generators, trays become large and excessively heavy. For such an application, a radial-inflow bed of cylindrical form has several advantages. Among the advantages are large flow area in small volume, cooled walls, and the ability to wind a screen catalyst into a one-piece bed of closely controlled packing. Such an assembly is much lighter than more conventional concepts.

Little trouble has resulted from the flow-area design of retainer plates. In one case, however, an upper plate designed for liquid flow was placed incorrectly at the bottom of the bed; the resultant excessive pressure drop caused the plate to sag and loosen the pack, with resulting instability. If all plates had been designed for pack exit-gas flows, no trouble would have been encountered. The flow design of these plates has not been critical, but all the designs used have had about 50-percent open area.

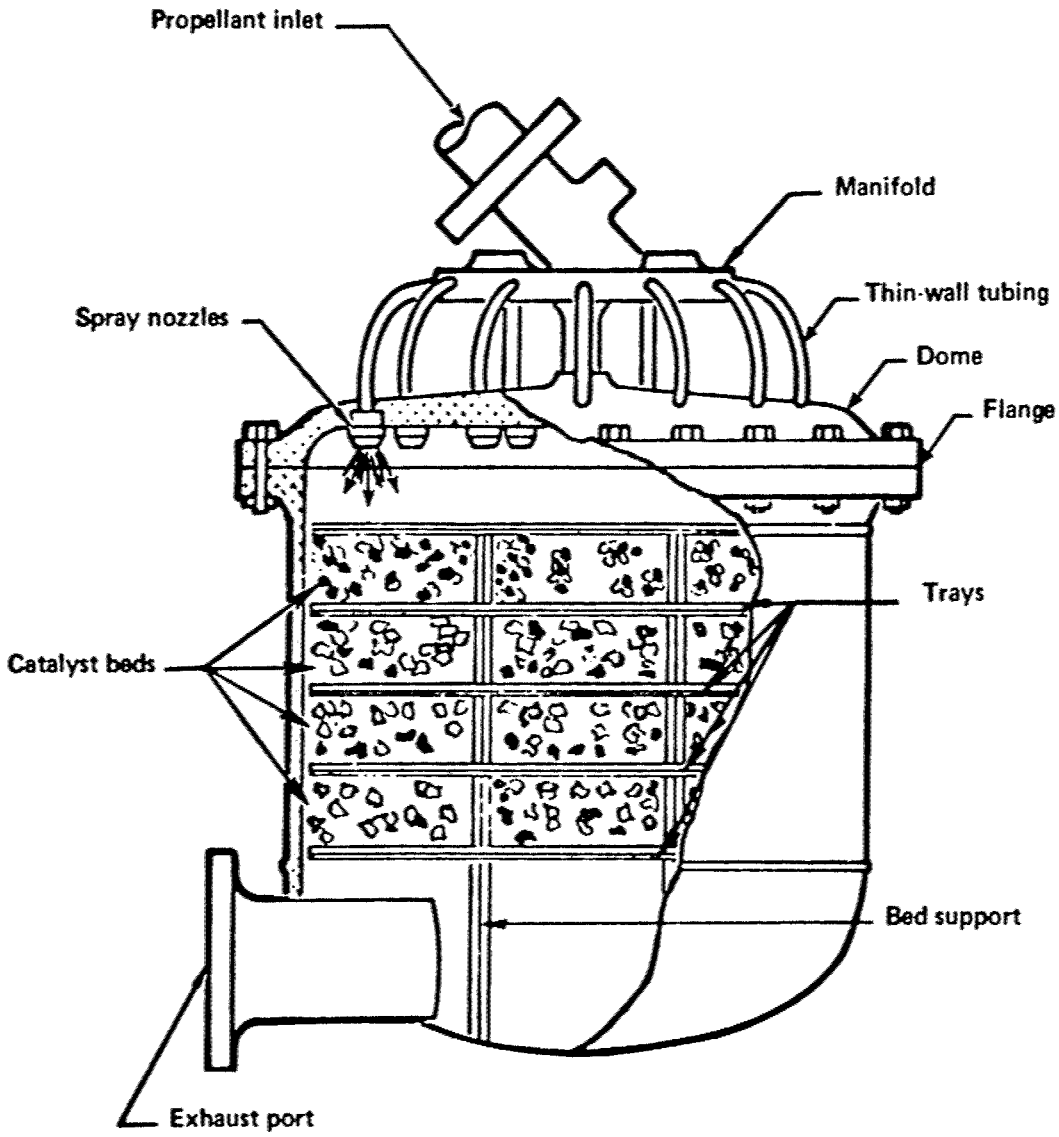

Figure 18. – Hydrazine gas generator

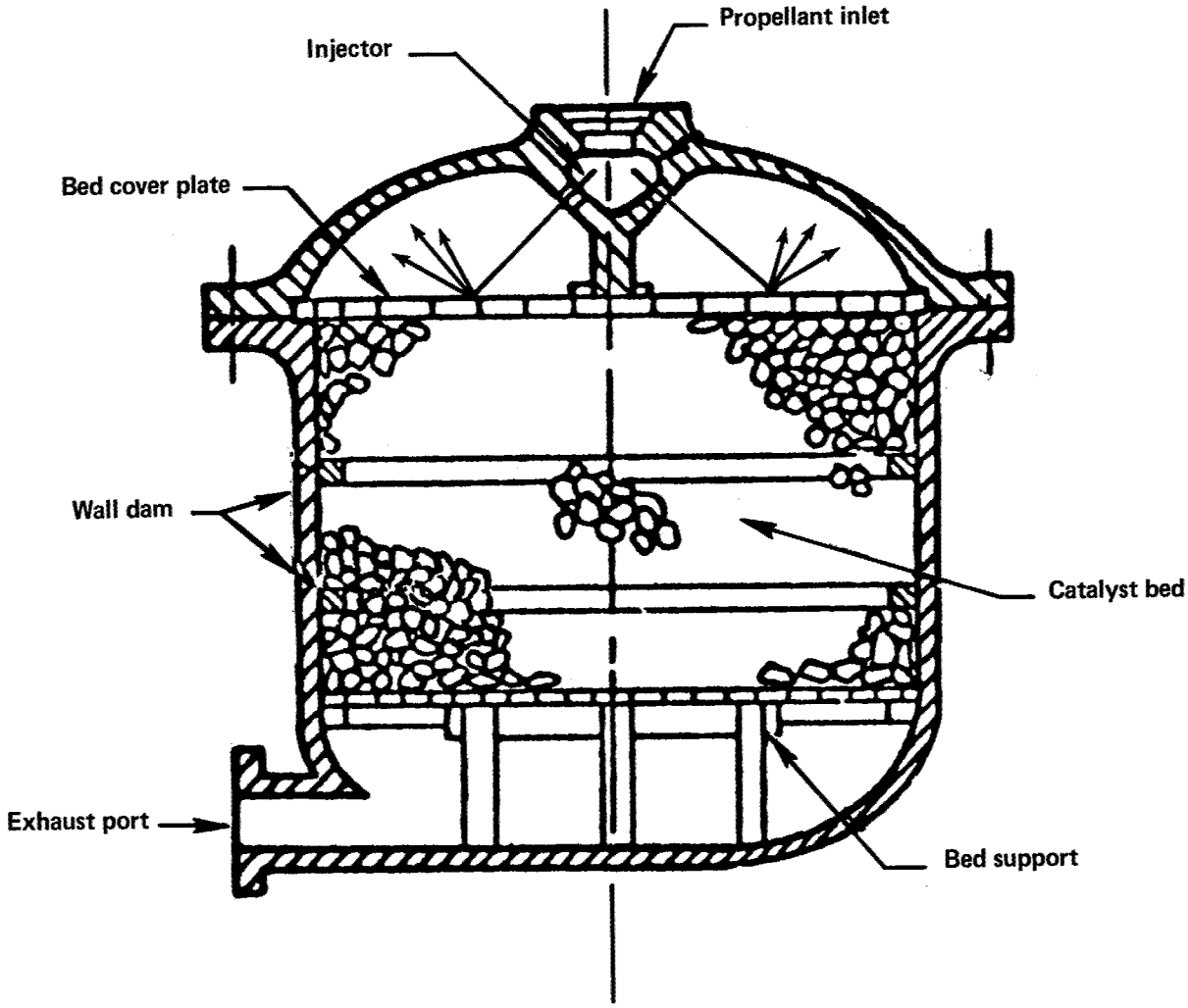

Figure 19. – Hydrogen peroxide gas generator

In the Redstone engine, catalyst fines were carried out of the GG because of the smooth low-loss port design. The fines were highly erosive to the aluminum turbine. A trap formed by a Borda tube (reentrant) outlet in a low-velocity region would have prevented this. Although this type of nozzle is rarely used, it should be considered where long turbine life is required.

2.2.1.4 Seals

Elastomeric O-ring seals seldom have been used in monopropellant GG's because the heat soak after cutoff usually ruins them. A silicone O-ring was used in an H_2O_2 GG successfully. In this application, the chamber opened near the injector, well above the catalyst bed, and low concentration (80 percent) H_2O_2 was used, so the heating was moderate.

Hydrazine gas generators usually are too hot for elastomeric seals, and metal seals of the K- or U-type normally are used. An early GG used a copper crush gasket, which was dissolved by the ammonia in the product gases. Reference 22 provides information on materials compatibility. Most high-temperature seals have worked well if good seal practices were used.

2.2.1.5 Supports

Most H_2O_2 GG's are light enough to be supported from the turbine inlet only, and mounting lugs are not required. Hydrazine GG's usually are comparatively heavy and require additional support. In one case, lugs attached to the body near the hot zone yielded and distorted. This situation made assembly and disassembly difficult. In a test stand where brackets were attached to the injector, there was no trouble. In this installation, the brackets served as an additional heat path and helped cool the injector.

2.2.1.6 Materials

With hydrazine, exhaust-gas temperature specifications have misled designers of GG chambers. The exit-gas temperature is not the highest in the chamber. Near the top of the catalyst bed, the gas temperature can reach levels over 2100°F (1422K). If the walls were stressed only for outlet temperature (about 1600°F (1144K)), wall failure would result. While measured temperatures usually are below gas temperatures because of ammonia decomposition on the thermocouple, wall temperatures are near thermocouple temperatures because of decomposition on the walls. This process helps to cool the wall. Stainless steel walls have been found satisfactory only for small GG's with very heavy walls where transient heating is not fast enough for equilibrium temperatures to be reached. For large GG's with thin hot walls, high-nickel-cobalt alloys (e.g., Haynes 25) have been used with good success. Nickel and cobalt are active catalytically and tend to be self-protecting. A more extensive

list of materials given in reference 22 must be read with thoughtful attention to the interpretation of the materials characteristics as represented by the classifications given. For example, materials that are listed therein as Key 6 (not compatible), such as Hastelloy C, actually are very good for GG body construction, because their reactivity is self-protecting through the ammonia decomposition reaction. Copper, cadmium, and other common platings are not used, because they dissolve in the ammonia present in the decomposition product gases. The dissolved metals have effects on the reactions too. It is believed that copper will react catalytically with the ammonia and that cadmium will suppress ammonia decomposition as it is known to suppress hydrazine decomposition.

With H_2O_2 decomposition, the temperature increases down the chamber. Most H_2O_2 gas generators are operated at temperatures low enough that stainless steel walls are adequate. At high H_2O_2 concentrations, the temperatures are high and oxidation tendencies are strong, and high-nickel, high-temperature materials may be needed for lightweight designs. Oxidation resistance may then be as big a factor as strength. Catalytic materials get very hot in H_2O_2 decomposition, as in N_2H_4 gas generators.

2.2.2 Catalyst

The design factors for catalysts for H_2O_2 gas generators have been refined and generally accepted as presented in reference 18. The design of catalysts for N_2H_4 gas generators is not as refined because little large-scale gas generator work has been done in recent years. As noted previously, most recent work on N_2H_4 catalysts has been done for thruster and auxiliary power systems (APS) applications where the design priorities are somewhat different. The following topics emphasize the unique features of large gas generators as derived from the limited full-scale work done in the past.

2.2.2.1 Bed or Pack

The H_2O_2 gas generators on the early rocket engines used either potassium permanganate liquid catalyst or a pellet-type catalyst. The liquid catalysts were quite effective, but they required another complete high-pressure feed system and have not been used with later engines. Pellet catalysts were found to break up or powder and degrade when subject to excessive pressure drop or when packed so loosely that the pellets could vibrate and abrade. These effects compounded the problem by plugging and loosening the bed, and bed pressures become unstable. The compression strength of silicon carbide or alumina pellets is relatively low. This weakness is a fundamental limitation in the use of these materials; even handling and transporting them become degrading activities. Despite the drawbacks, however, pellet-type catalysts have been widely used.

Bed sizing for H_2O_2 decomposition has been done mostly on the basis of mass flowrate per unit area of bed inlet face (mass flux). For a pellet-type catalyst and relatively low peroxide

concentrations (≈ 80 percent H_2O_2), experience has shown that a mass flux of 8 lb/min/in.^{2} (0.56 kg/min/cm^2) is the maximum that will give adequate catalyst life; higher values cause catalyst crushing. The pellet bed requires a compressive load to prevent bed vibration that can lead to bed blow-apart. Pockets of pellets without compressive loading have been found to give rough pressure traces and to produce excessive catalyst powdering. Preloading a pellet bed is an art, not a science. The preload depends on both the compressive strength of the catalyst carrier being used and the uniformity of pellet packing. Vibratory motors used for pellet packing produce excessive powdering and bed plugging. Careful hand loading is still the most satisfactory method. Since pellet loads depend greatly on the particular design being considered, no general limits can be given.

Because of the problems with the physical properties of pellet catalysts, screen catalysts that were much more rugged were developed. The screen catalysts were more active and could be used with pure H_2O_2 without serious degradation. With screens, mass fluxes of 50 lb/min/in.^{2} (3.52 kg/min/cm^2) and higher were tried, but serious problems of bed flooding and compressing developed. Few problems occurred at fluxes below 10 lb/min/in.^{2} (0.70 kg/min/cm^2) with silver screen packs and 20 lb/min/in.^{2} (1.41 kg/min/cm^2) with silver-plated-steel screen packs. The required depth (or length) of H_2O_2 catalyst beds is not as well defined as the cross-sectional area. As noted earlier, bed depths from 1/2 to 6 in. (1.3 to 15.2 cm) have been tried with various H_2O_2 concentrations and catalysts. With pellet-type catalysts, bed depths of 3 to 4 in (7.6 to 10.2 cm) have been satisfactory with 80 percent H_2O_2. With higher concentrations of H_2O_2 and screen-type catalysts, beds as thin as 1/2 in. (1.3 cm) have been fairly successful as long as the feed was uniform. For most practical applications, about a 3-in. (7.6 cm) depth is preferred, although this dimension does not seem very critical.

For stable operation, the screen packs require compressive loading; compression with 2000-psi (13.8 MN/m^2) loads has produced good operation. Obviously, this compression loading must be maintained, even at high temperature, by properly designed retainer plates. Whatever the retainer design, the lowest one usually requires additional structural support. Posts similar to those shown in figures 18 and 19 are less of a problem than is a beam structure.

On a few occasions, attempts have been made to lower the H_2O_2 exhaust-gas temperature by underdesigning the catalyst bed to produce incomplete decomposition of the hydrogen peroxide. The results have been poor, with both instability and "popping" occurring. Similar problems have developed with the use of too many non-catalytic screens in the pack. Since H_2O_2 will decompose thermally at a less predictable rate without a catalyst, the only reliable way yet found to cool the decomposition products is to add water (ref. 9).

A great amount of confusion and difficulty in designing hydrazine catalyst beds has developed because of misuse of temperature measurements of product gases. As discussed in section 2.2.1.1, Grant (ref. 19) used the measured composition to verify the thermodynamic temperature of the exhaust gas; it was recognized at that time that the temperatures

measured by thermocouples did not represent the true state of the gas. This fact seems to have been forgotten during the development of the Shell 405 catalyst, and the results of later work have lost much significance because of the use of thermocouple temperature readings. Temperatures derived from the composition of the gas and its thermodynamic state are the proper basis for all fluid dynamic and kinetic calculations. The thermocouple-measured temperature is less than this temperature by an unpredictable amount. Catalyst-bed designs and nozzle and duct designs based on thermocouple-measured temperatures will be in error in a direction that results in excessive actual pressure losses.

No simple method of temperature measurement in hydrazine products has been found. Any physical probe will have a surface reaction and resulting error. Possibly optical methods could be used, but no generally accepted method has evolved. Sampling the gas, determining the composition, and then calculating the temperature is the only approach presently known to give good results. This technique is not easy or quick, and is particularly ineffective when immediate results are needed in order to specify the conditions for succeeding tests in a development program.

2.2.2.2 Catalyst Materials

One of the major advances in monopropellant gas generators was the development of silver catalyst screens for H_2O_2 decomposition. After considerable early trouble with pack sintering and high erosion rates, it was learned that the melting point of silver is significantly lower in a high-pressure, oxygen-rich atmosphere than it is under normal conditions. In addition, the soft pure-silver screens have a thermal expansion rate higher than that of the housing; during hot firing, this differential causes the screen to crimp at the periphery. Screen contraction upon subsequent cooling creates a wall gap that results in a high wall channel flow at start. Pure silver is seldom used now. Further development showed that screens made from an alloy of 70-percent silver and 30-percent palladium were the most active in the cooler preflame areas and also retained very good starting characteristics. The relatively low strength of this alloy restricted use of the screens to the cooler preflame areas. In the flame area, less activity is needed, and plain steel or nickel screens have been used in some cases. Where more activity was required, these materials were silver plated. In some packs, the screens are varied throughout the pack. No precise approach to pack arrangement has been developed, and experimentation is required.

For hydrazine, the JPL-developed catalysts (ref. 19) have been used extensively, but they are hard to start and require extensive preheating. Shell 405 catalyst, however, contains iridium, which is in such short supply that no large-scale GG program can be based on its use. Various proprietary modifications of the JPL catalysts have exhibited increased strength and reactivity to a limited degree, but none has been as successful as the Shell 405 catalyst. In a large-scale program, where Shell 405 cannot be used, the catalyst characteristics summarized in references 23 and 24 provide a basis for selection of a catalyst.

2.2.2.3 Poisons

Hydrogen peroxide decomposition catalysts are very sensitive to catalyst poisons, i.e., materials that interfere strongly with catalytic activity. Serious cases of poisoning have resulted in complete loss of gas generation. Most of the work on poisons has been done with silver-screen catalysts; however, the results probably are applicable to the permanganate catalysts also. Catalyst poisons are troublesome particularly because they are effective in extremely dilute concentrations. The more effective poisons are tin, zinc, and cadmium, all of which are fairly common materials of construction in platings and solders and brazes. Even CO_2 purges have been found to be detrimental. Most sulfur compounds are strongly detrimental. Poisonous characteristics are very difficult to predict, so all new untried materials are laboratory tested before application.

In hydrazine systems, the same materials that poison H_2O_2 are detrimental but less effective. Materials with fairly strong effects are cadmium plate and barium compounds such as the oxide. In reference 22, cadmium is listed as a compatible material because of its lack of reaction; however, it is unsuitable in a system using catalytic decomposition. Tests with Shell 405 catalyst have shown poisoning effects from sterilizing solutions of ethylene oxide and Freon 12. Effects that are often mistaken for poisoning result from the mechanical coating of the catalyst with carbon or water.

2.2.2.4 Wall Dams

A frequently overlooked effect in packed catalytic gas generators is the "wall channeling" of the flow. It is obvious that flow obstruction by the pack is least near a smooth wall, so that flow tends to stay near the wall and bypass the catalyst. In small-diameter gas generators, where pellet size is a significant percentage of the bed diameter, this wall flow can become a dominant effect invalidating normal design relationships. In larger sized beds (>4 in. (10 cm) diam.), including those using screen packs, the effect is less but still significant as indicated by pressure roughness and temperature variations. One effective way of preventing this channeling is to install wall dams every 1 to 2 in. (2.5 to 5 cm) down the wall, as in figure 19. In simplest form, a wall dam may consist of a simple piston ring. The wall dam should project at least 1/8 in. (0.32 cm) from the wall for good results. In a catalyst bed without support trays, such as a screen bed, the wall dams should be free floating so that they will not interfere with bed compression. In catalyst packs using tray supports, the trays can serve as wall dams if they block the wall flow. In figure 18, the trays do not fit closely enough to serve as wall dams, but in that size bed (≈ 9 in. (23 cm) diam.) the wall channeling is not serious.

2.2.3 Injector

2.2.3.1 Orifices

Most monopropellant gas generators have used injectors with drilled orifices. Often the injector is placed in contact with the bed, and the injection jets enter the catalyst directly. Bed breakup, sintering, erosion, instability, and incomplete reaction (sec. 2.2.1.3) have resulted from this practice. The concentrated flow produces channels of extreme pressure and temperature gradients in the bed. Setting the injector away from the bed helps the situation, but axial streams can still cause channel flow and attendant problems. The design of the Redstone GG (fig. 19) prevented channel flow by directing the injector streams at an angle to the bed cover plate. The resulting splash atomized the flow, and fairly uniform bed flow was obtained.

A more promising approach has been the use of swirl-cup nozzles. These nozzles have been applied primarily to hydrazine gas generators, where propellant distribution is critical. The GG shown in figure 18 demonstrated extremely even flow distribution through the use of many spray nozzles. The resulting low-momentum sprays showed no evidence of bed penetration. Reaction stability was very good, but the even distribution obtained with the full-cone nozzles required electrical heaters for simultaneous ignition of the entire flow. In similar units, a single spray nozzle provides more uniform flow than a large number of impinging or nonimpinging orifices.

Another approach to even flow distribution is the use of a micro-orifice injector ($\approx$ 2 to 5 mil (51 to 127μm) "effective diameter" slots) that produces low-velocity injection at low flowrate. This kind of injector has undergone extensive development with N_2H_4 and shows promise for GG applications because of its capability for producing low uniform injection flux (ref. 12).

2.2.3.2 Manifolds

The design of manifolds for monopropellant gas generators is one of the most critical areas of the entire design. The adaptation of bipropellant thrust chamber manifolds where the propellant floods the upstream face of the injector is usually unsatisfactory for monopropellant manifolds, particularly where restarts are required. The heat conduction

from the chamber usually will cause "popping" or major damage because of thermal decomposition on the hot surfaces. Insulation has not been used, but various concepts for separating the manifold from the injector have been tried. Concepts that use only thin-wall tubing between the two, as in figure 18, have been highly successful. The propellant cools the tubes during firing, and the small conduction area minimizes heating and postrun conduction. Heavier structural attachment of the manifold to the chamber has not been found necessary and, when used, has frequently resulted in excessive heat conduction.

Manifolds have been a source of trouble because of the flow distribution they produce. A manifold inlet pointed at injector feed points will produce nonuniform feed to the bed and, in some cases, bed penetration and flooding. Satisfactory distribution has been attained with tangential inlets or blank wall opposite the inlet. Classical diffuser design probably would work, but it has not been used. The manifold shown in figure 18 was a compromise, with the inlet stream directed at an angle to the blank surface of the manifold bottom. The inlet was not centered, so the resultant deflected flow circulated tangentially. Although the outer ring of nozzles was fed directly from the circulating flow, no maldistribution was noted, and operation was highly successful. A detailed discussion of flow distribution in manifolds is presented in reference 2.

2.2.3.3 Injector Face

Most monopropellant GG injectors have been made of stainless steel for the best combination of strength and low chemical activity. In thruster and pulse motors, the injector often is placed directly on the catalyst bed as a clamping plate. Among the disadvantages of such a design for large gas generators (> 3 in. (7.62 cm) diam.) are high heat transfer from the catalyst bed, poor propellant distribution, excessively heated manifolds, and heavy weight resulting from trying to hold pressure with a flat surface. When this design has been used for large gas generators, manifold explosions and even valve inlet explosions have occurred. These explosions result from the excessive heat conduction encountered even with poorly conducting materials such as stainless steels.

Domed injectors as shown in figures 18 and 19 provide good stress distribution, the conduction paths are minimized, and volume is available for obtaining uniform propellant distributions. The face of the injector thus becomes only a pressure wall of the chamber. The design is light and efficient; the higher cost often is no greater than the cost of the troubles that arise with the clamping-plate design.

2.2.4 Accessories

2.2.4.1 Fasteners

Two primary difficulties have been experienced with chamber flange bolts used in monopropellant gas generators. First, if the bolts are located in the hot zone of the chamber, most bolt materials will exhibit excessive creep. The easiest solution has been to move the flange to a cooler location; this has been successful in controlling excessive creep. Second, if the bolts are carbon steel and the GG is a high-concentration H_2O_2 type, leaking gas may ignite the bolts. This condition has occurred when a seal leaked and has caused chamber separation and failure. Stainless steel bolts have not given trouble in this respect.

2.2.4.2 Igniters

Hydrogen peroxide has the advantage of being spontaneously reactive with modern catalysts at temperatures more than a few degrees above its freezing point. Hydrazine is nearly as reactive with Shell 405 catalyst, and no igniters are needed with this catalyst. The JPL-developed catalysts (ref. 19) are difficult to start and require extensive preheating. Early gas generators used electrical coils in the upper bed for preheating. The assembly problems were severe, with shorting or breaking common. Preheat times were long, in one case over 45 minutes, and quenching of the bed and reaction was frequent. To provide the vigorous heating required, chemical heaters subsequently were used. One method used hypergolic salts on top of the bed to initiate the reaction. A large number of salts could have been used, but the most common was I_2O_5. This material is extremely active, and this activity has caused trouble on occasion; in addition, the salt is somewhat hygroscopic. Component tests have indicated that less damaging starts and improved properties can be obtained with HIO_3, $(NH_4)_2Cr_2O_7$, $AgNO_3$, or $KMnO_4$.

When starting crystals placed above the upper retainer plate have been used for hydrazine ignition, the bed has been damaged when the crystals were shaken into the bed. A design such as shown in figure 20 contains the crystals and prevents their entering the bed. Refractory coating of the upper retainer may be necessary to protect it from very hot ignition crystals.

Another method of starting hydrazine gas generators is to fire a solid propellant charge through the bed to heat the bed and pre-spin the pumps. Most solid propellants compounded for temperatures compatible with turbines produce residue that in time plugs the bed. In addition, when the charge is fired in the center, the hydrazine flow is forced out toward the walls, where wall channel flow becomes serious. With this ignition system, a tangential port for the starter probably would effectively distribute the residue around the wall and suppress wall channeling.

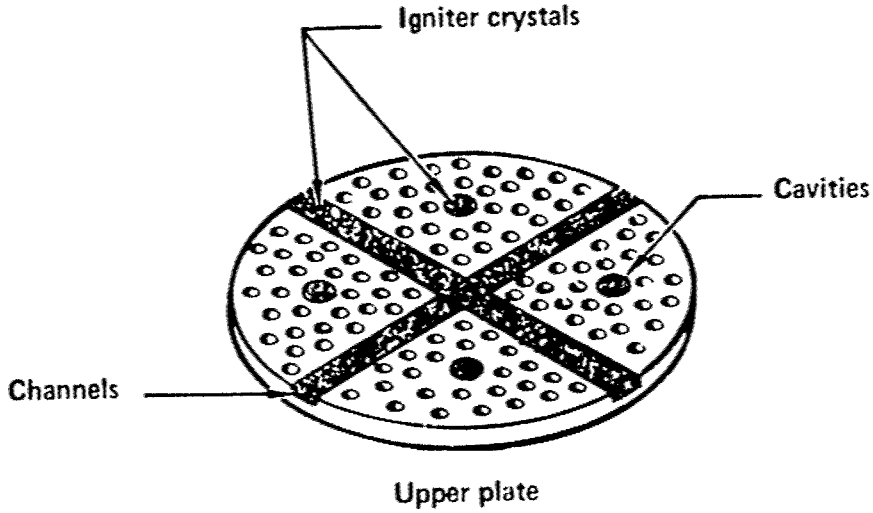

Figure 20. – Holder for igniter crystals

2.3 Common Problems

2.3.1 Pressure Measurement

The design provisions for sensing pressure in the combustion zones of gas generators have consistently ignored ordinary good practices. The resultant measurements seldom match engine balance calculations, which are usually based on total pressure values. Two design features in particular have contributed to the errors:

- Location of the tap in regions of low static pressure, e.g., downstream of a contraction or on the inside of curved flow.
- Use of large taps, 1/4-in. (0.635 cm) or larger inside diameter.

In some cases, these problems have been overcome. The use of static pressure at the injector end has been successful because of the low velocities involved. At the discharge end, the use of Kiel probes has been satisfactory, although these probes present access and stress problems because of their large size. In some cases, pressures have been sensed in the turbine duct when that location had preferable flow profiles. The recovery factor for a large port or an angled port can be large enough to cause significant errors. Filler plugs have been used with fair success but are not as effective as a 1/16-in. (0.16 cm)-diam. hole normal to the surface. Smaller ports tend to plug, and larger ones tend to increase the recovery factor. Ports that are not normal to the surface have produced odd and unexplained effects.

With monopropellants, the configuration of the pressure tap is important because the ports can trap propellant that cooks off as it heats up. Locating taps on top of the duct usually produces adequate drainage. Preferably, injector manifold taps are located away from the hot flange.

2.3.2 Temperature Measurement

Most exhaust-gas temperature measurements are made with thermocouples protected by 1/4 - in. (0.635 cm) metal-tubing shields. For many applications, this practice is adequate; however, when temperatures exceed 1400°F (1033K) and dynamic pressures are significant, the shields bend and break when immersed to a depth greater than eight shield diameters. Limiting the immersion of thermocouples to eight diameters occasionally prevents the measurement of flow core temperatures, which are often the hottest in the flow. There is no general technological solution to this problem. Increasing the shield diameter often produces excessive blockage of the flow passage. The sealing of an airfoil-shaped shield is not simple enough for wide usage. For measurements in a small duct, trailing-edge supports permanently attached to the duct are an alternative, although this practice complicates the

duct design. The use of high-temperature materials for shields has not been very successful, because generally the material bending strength is low and cost usually is high.

Thermocouples used in monopropellant systems occasionally have given trouble if open-end shields are used. The monopropellant soaks into the insulation within the shield, then the postrun heat soak causes cookoff, blowing out the insulation and, occasionally, the end of the shield. Various end-sealing ideas have been tried; of these, one of the better is the use of Sauereisen cements. These cements are not useful for prolonged exposures, and they will crack and leak with thermal cycling or vibration, but for temporary use in a test program where heat soak is a problem they are better than most other seals.

2.4 Testing

2.4.1 Bipropellant Gas Generator

2.4.1.1 Objectives

The test program for a gas generator can be reduced greatly from the searching exploration of early development programs. Most development test programs tend to follow these steps:

(1) Start/stop – Tests of very short (fraction of a second) duration are conducted, high-speed instrumentation being used to evaluate ignition consistency, transients affecting temperature, purge operation, pressure effect on the structure, and instrumentation operation.

(2) Nominal operation – Tests of gradually increasing duration are conducted at nominal flowrate, pressure, and temperature. These tests check initial durability. The hotter areas can be defined through the use of temperature-indicating paints such as zinc chromate. Any hot streaks are corrected at this time.

(3) Operational range demonstration – The operating conditions of a GG are basically defined by ranges of exhaust temperature, pressure, and flowrate. Range testing is started at the low level of these three parameters, where hot streaking and structural loads are least but stability is poorest. Testing at individual extremes is done before testing at the maximum level of all three. At this maximum level, structural margins and overheating margins are minimum.

(4) Repeatability – The effect of time on operational characteristics is evaluated with repeated long tests. Creep and fatigue problems are watched for closely.

2.4.1.2 Problem Areas

Probably the greatest problem in testing the gas generator (or in using it successfully in an engine) is to manage the transient processes. The wide scope of this problem is apparent from the discussions that follow.

The first problem usually encountered is proper sequencing of propellant flows. Normally, most nonhypergolic propellants will ignite more easily if the mixture is somewhat oxidizer rich. The transition from readily ignited mixtures to normal fuel-rich operation has been so difficult that most GG's use a fuel lead on start and use oversize igniters to produce positive ignition. When the oxidizer is cryogenic, the dead-end line to the GG valve usually forms a gas pocket, the size of which can be controlled by line design. This pocket tends to smooth starting transients. Large loops in the line to a GG valve with a long chill period have been found to trap liquid on the valve. Under this condition, the start was vigorous, followed by a sudden decay as the gas pocket was injected. This decay caused pump speed decay and adversely affected the engine start transient. With liquid oxygen, loops of about 6-in. (15 cm) maximum height above the valve have been found to be the largest practical entrant loop. With liquid hydrogen, the initial flow is particularly critical, and no inlet loops can be tolerated; in addition, a bleed line at the GG valve usually is necessary to provide liquid to the valve on start. Valve timing often has a strong effect on starting surges. Starting with a valve fuel-lead setting of 100 to 300 msec usually has been satisfactory; however, each design has its own characteristics, and it is preferable to have the initial tests very short to prevent damage from large starting surges until a safe valve sequence is found.

The feed system has a strong effect on start and buildup. Test setups frequently use large pressurized tanks with long runs of propellant lines. The high pressure drop of long lines require the tank pressures to be set much higher than normal engine pressures. Before flow stabilizes, this high pressure temporarily appears at the GG valve and can affect the start detrimentally. When serious problems arise, a bleed line and valve can dump propellant at the GG until GG flow is established; then the bleed is closed. Obviously, the sequencing of this process can be difficult, and the use of low-pressure-drop systems (large lines, no orifices, turbine flow meters, gradual bends, etc.) is preferred.

With a new program and new facilities, a system often will be checked out with water blowdowns before a firing is attempted. This procedure is fine for storable-propellant systems; in cryogenic-propellant systems, however, it has caused more trouble than benefit. The water usually gets into the instrument taps and lines and will not drain. When cryogenic propellant is introduced, the water freezes and causes many difficulties. Although more costly in propellant, it is more practical to blowdown with the cryogenic propellant, using a restrictor to simulate injector and combustion pressures. At best, blowdowns provide crude data, and initial tests have to be reviewed very carefully.

One of the least understood aspects of GG testing concerns the application of manifold purges. Inert gas purges have been used to control manifold contamination and post-cutoff temperature surges. On start, purges are used to prevent reverse flow of the fuel lead into the oxidizer manifold. The post-cutoff purges control both contamination and final temperature spikes. The obscure problem often missed is that of changing purge pressure level when flow is stopped (usually check valves are used to prevent propellant flow into the purge-gas line). Regulators usually are set under full-flow conditions to a level below the

normal propellant manifold pressures. This practice causes the check valves to close when propellants prime the manifolds. If the regulator seals are not in excellent condition, slight leakage will cause significant pressure increases until gas leaks into the manifold; the leaking gas displaces propellant or causes an early flow of gas on cutoff, thus altering the planned cutoff transient. In certain cases, gas leakage can cause combustion instability.

Gas generators are not often troubled by combustion instability. When instability does occur, the frequency usually is a function of total volume of the hot-gas system, and tests of the GG alone may not demonstrate actual stability. Not only is volume important, but also the sonic path has an influence. The difference between a tangential inlet, where the manifold can be simulated by a straight pipe, and a radial inlet, where a better simulation is two pipes simulating each half of the turbine manifold, is significant in determining both frequency and amplitude. Complete simulation using a turbine manifold is better, if a manifold is available.

2.4.1.3 Data Utilization

Most system analyses to establish component loss budgets are based on total-pressure drops. It is usually easier to measure static pressures during tests. Obviously, the pressure drops will not match. It is surprising how often this obvious difference causes confusion in using test data. It would be much better to use total-pressure probes; however, most projects do not want to expend the effort and money for total-pressure probes. An informed approach to data utilization is necessary when static measurements are employed. Even thermocouples with round junctions that are not shielded from the cold walls can have significant radiation losses and resulting measurement errors; most thermocouples with exposed junctions thus measure temperatures closer to total than to true static.

2.4.1.4 Contamination and Safety

A large part of GG explosions have been caused by manifold contamination; various sources are contributors. The purge system is a common source of contamination, even though purges are intended to prevent such problems. Two of the most common ways in which purges introduce contamination are the following:

(1) If the purge regulator is slow in response, the pressure will decay excessively on the start of gas flow and allow reverse flow into the manifold early in the shutdown transient.
(2) Frequently, the purge check valves will leak, and the entire purge system will charge with fuel. On cutoff, fuel is pushed into both manifolds.

Anyone working in a test facility stays constantly alert for signs of mixed propellants. With cryogenic propellants, the appearance of frost is often an indicator of an unsafe condition. A frosted combustion chamber is a particular dangerous situation. If a valve has leaked or been inadvertently opened, dropping liquid oxygen into the chamber, a detonable mixture has been made and frozen. Melting and vaporization of the oxygen in the mixture takes a

long time. During this time, even the turning of a bolt or the shock of a system valve operation can detonate the mixture.

2.4.2 Monopropellant Gas Generator

2.4.2.1 Objectives

The initial testing of a monopropellant gas generator usually evaluates the starting characteristics of the reaction. Valve adjustment to reduce initial flows in order to prevent bed flooding and quenching may be necessary. When starting is satisfactory, decomposition efficiency is evaluated to define needed changes to the bed. The catalyst bed should be tested for repeatability and sintering at long duration with high-temperature propellant.

The most sensitive conditions for catalyst-bed evaluations are at high flowrates and low pressures. At these conditions, bed pressure loading is highest and channel flow most probable. The results reported in references 23 and 25 show that extended durations have a significant effect on catalyst porosity and strength. Full-duration testing for the design life of the GG is necessary to evaluate changes in operating characteristics. Short-duration tests, even when equal in total time to a full-duration test, are not as significant as long-duration tests in evaluating catalyst changes.

2.4.2.2 Problem Areas

As discussed previously, the measurement of temperature in N_2H_4 decomposition products is particularly difficult. Nearly all metals used for temperature-sensing elements are quite active in decomposing NH_3 on the element surface. This decomposition produces an incorrect reading that is too low; the magnitude of error is not predictable with current techniques. The best method of temperature measurement is the method of chemical analysis used by Grant (ref. 19). In this method, the NH_3 is removed chemically, and the temperature is calculated on the basis of gas composition. When such an analysis is impractical (as in most cases), the method of measuring nozzle flow and calculating temperature from the flow equation may be acceptable. This method is subject to large errors, but these are not greater than the errors found in thermocouple measurements.

Temperature measurement in H_2O_2 products is not usually a severe problem. With concentrations greater than 90 percent H_2O_2, the failure rate of bare-junction thermocouples is quite high, and a shielded junction is more durable if the longer response time is acceptable.

2.4.2.3 Contamination and Safety

Contamination in monopropellant systems usually involves metal oxides in propellant lines and instrument lines. Oxides of iron are particularly reactive with both N_2H_4 and H_2O_2. The cleanup of weld slag becomes particularly important. Manifold surges and "pops" have

been traced to weld slag in the manifold. Systems for H_2O_2 are often passivated with dilute solutions of H_2O_2. This technique has not been used much for N_2H_4. The best results have been obtained with meticulous cleaning and an acid etch.

Oil contamination is quite serious with H_2O_2, and detonations have resulted from oily fingerprints. Normal cleaning is adequate protection from cutting- and lubricating-oil contamination.

3. DESIGN CRITERIA and Recommended Practices

3.1 Bipropellant Gas Generators

3.1.1 Chamber

3.1.1.1 Shape

Chamber shape shall maximize mixing and minimize hot spots.

Use a spherical, reverse-flow chamber with either UMR or hot-core injectors (see sec. 2.1.2 and 3.1.2 for injector considerations). The preferred GG assembly configuration has the injector located at the top or in the direction of thrust and a side outlet located 90° to the injector. The shape should not cause the theoretical Mach number to exceed 0.1 anywhere in the chamber. Simple streamline-flow analysis can be used for this determination, even though actual flow is turbulent and circulatory. Establish details of chamber shape according to sections 3.1.1.1.1 through 3.1.1.1.3.

3.1.1.1.1 Stagnating-Surface Accessibility

The flow-stagnating surface in reverse-flow chambers shall be accessible to cooling.

Design the chamber to cause flow stagnation against an outside surface so that cooling flow can be added if necessary. Do not use the configuration of figure 2 unless engine packaging absolutely requires it.

3.1.1.1.2 Flow Path

Flow through the chamber shall not produce hot spots in the lower portions of the discharge ports.

Design the chamber with an enlargement just below the injector to enhance reverse flow. Do not maintain constant cross section from the injector to the discharge flange. The enlargement must be greater when hot-core injectors are used than when UMR injectors are used. Chamber-to-injector diameter ratios should exceed 2 when hot-core injectors are used (see proportions in fig. 5).

3.1.1.1.3 Chamber Proportions

The chamber proportions shall promote thorough mixing.

Establish chamber size as provided in section 3.1.1.2, but use the jet mixing theory in references 3 through 6 to obtain chamber dimensions and proportions. The design guides used for thrust chambers usually will result in the design of a chamber with insufficient recirculation, because the flow mixing problems are different. Even the flow from a UMR injector will contain small hot streaks if the chamber suppresses flow reversal and turbulence, as is the case with straight-tube chambers.

3.1.1.2 Size

The chamber shall be large enough to provide for completion of combustion.

The chamber volume should be sized using the classical stay time equation:

$$V_c = t_s (\dot{W}/\rho)$$

where

V_c = chamber volume, ft^3 (m^3)
t_s = stay time, sec
$\dot{W}$ = total flow rate, lb/sec (kg/sec)
ρ = chamber gas density, lb/ft^3 (kg/m^3)

Select stay time on the basis of successful and well-documented experience. For common "normal" propellants, gas stay times of about 10 msec are adequate; stay times less than 5 or 6 msec usually result in a considerable development program on the gas generator. With "energetic" propellants, the stay time can be reduced, although optimum values are poorly defined. Designs that are sized to produce burning in the turbine manifold likely will cause considerable trouble; most turbine manifolds are poor combustion chambers, and overheating or manifold burning usually occurs. Thrust-chamber-derived stay times usually are too small, because of the different standards of mixing accepted, and therefore should not be used. The parameters L* and volumetric loading are closely related to stay time; therefore, they should not be used.

3.1.1.3 Exhaust Outlet

3.1.1.3.1 Outlet Orientation

Chamber outlet orientation shall minimize turbine damage from overtemperature malfunction and shall not cause flow imbalance.

Place chamber outlets at 90° to the injection axis as shown in figures 5, 6, 7, and 9. Use an axial outlet as shown in figure 2 only if side outlet packaging is impossible. Use only one outlet per chamber. If more than one turbine is to be fed, divide the flow downstream of the chamber port after mixing is completed.

3.1.1.3.2 Outlet Location

Chamber outlet location shall produce maximum mixing consistent with good drainage capability.

Place the chamber outlet as high in the chamber as possible, as shown in figures 5 and 9. With low-volatility fuels such as RP-1, this location will result in contamination problems from residual fuel. The use of drain ports that permit draining the chamber in both the flight and transport positions, as illustrated in figure 9, is recommended where chamber access permits. Where access is poor, a lower discharge port and flat-bottom chamber will work provided that a UMR injector is used.

3.1.1.4 Mixing Baffles and Turbulence Rings

3.1.1.4.1 Mixing Baffles

Reverse-flow mixing baffles shall permit free flow reversal without experiencing edge burning.

Design the mixing baffle to have a diameter at least 1½ times the active face diameter, as illustrated in figure 5. The bottom-heating problem with a hot-core injector and a large baffle is much easier to solve with auxiliary injectors than are the edge- and port-burning problems encountered with too small a baffle.

3.1.1.4.2 Turbulence Rings

Turbulence rings shall provide minor mixing adjustments, not major mixing; shall produce minimum pressure loss; and shall not be subject to hot spots.

Use turbulence rings to separate film-coolant flow from the walls and to direct the main jet away from the chamber outlet by cutting it at an angle as shown in figure 9.

Design the rings as cones or nozzles to increase the discharge coefficient and reduce pressure losses (see fig. 9).

Locate turbulence rings within 2 in. (5 cm) of the injector. Spray coolant on the rings if possible to cool them and also to cause splash atomization. Do not use multihole turbulence rings.

3.1.1.5 Mounts

Gas generator mounts shall not experience damage from gas generator heating.

Analytically determine the expected uniform heating characteristics and thermal expansion due to the gas generator, and design the mount for free motion in the exact direction

required. Experimentally determine the nonuniform heating pattern produced by the gas generator and modify the mount accordingly. Place GG mounts above the injector, where they are cooled.

3.1.1.6 Thermal Protection

3.1.1.6.1 Cooling

The method for cooling the gas generator body shall be as simple as possible.

The chamber materials shown in table I will work with gas temperatures as high as most turbines can withstand. Use uncooled designs wherever possible; even if expensive alloys are required, program savings will well balance the cost. If exterior surface temperatures are too high, use external insulation.

3.1.1.6.2 Insulation

Insulation for uncooled gas generators shall not absorb spills or condensate and shall not inflate at altitude.

Use custom-designed insulation blankets with tough, vented, nonabsorbent metal surface shields. Good shields are complex and should be designed by a specialist in the field.

3.1.1.7 Materials

Gas generator chamber material shall withstand expected temperature extremes.

For temperatures up to about 1200°F (922K), and up to about 1400°F (1033K) for relatively small GG's, use 347 CRES body material. For higher temperatures on large GG's, and to save weight, use Hastelloy C, N-155, or possibly Hastelloy X. Hastelloy B and Haynes 25 should be used only when specific conditions require. Rene 41 might be an acceptable alternative to Haynes 25 at temperatures near 1700°F (1200K); however, experience is very limited at these levels.

3.1.1.8 Fabrication

The gas generator chamber fabrication shall be consistent with good manufacturing practices.

Use wrought material instead of castings to avoid problems with voids and subsequent repairs. When welding, use only 347 CRES and Hastelloy W weld rod to maintain parent-metal ductility. Use Hastelloy B weld rod only with Hastelloy B parent material. Use standard appropriate stress relief and anneal processes after welding; do not neglect or skip these processes to meet schedules.

3.1.2 Injector

3.1.2.1 Injector Types

3.1.2.1.1 Injector Effectiveness

The injector design shall not cause gas generator or turbine system overheating.

For most normal bipropellant applications, a UMR injector design (fig. 10) is preferred. The orifice pattern can be a classic triplet, quincunx, or similar multiorifice pattern. In most applications, a triplet has been adequate. For applications with badly undersized chambers or very serious mixing problems, consider the micro-orifice UMR. When a serious contamination problem arises and all else fails to reduce the contamination, consider a poppet injector as a last resort. The orifice-type hot-core and the large-element coaxial injector should not be used in gas generators.

3.1.2.1.2 Injector Pattern

A UMR injector pattern shall result in oxidizer orifices large enough to avoid fabrication problems and to prevent obstruction from contamination.

Where necessary, increase the oxidizer orifice diameter by using a UMR element that has many fuel streams impinging on one oxidizer stream, such as the 6:1 element. When a UMR injector cannot be used, use a semi-UMR injector with several alternating zones of raw fuel and reaction zones. Break up the propellant streams by using self-impinging elements, and use as many oxidizer elements as allowable.

3.1.2.2 Elements

3.1.2.2.1 Streaking

The injector elements shall produce a minimum of streaking.

For UMR injectors, use symmetrical, small, fast-mixing elements such as the triplet or quincunx (symmetrical 4:1) elements. Use concentric-tube elements only when sufficient work has been done with similar elements to justify a particular design and when the chamber length based on mixing theory is adequate. Use the smallest practical flowrate per element, as low as 0.1 lb/sec (0.045 kg/sec) per element if possible. Consult reference 2 for a discussion of element types.

3.1.2.2.2 Atomization

The injector elements shall promote rapid mixing of diluent.

Use design techniques from reference 2 to produce the finest atomization and most balanced pattern possible. In general, these techniques will include the design of the smallest orifice practical to manufacture and the design of impinging streams to have balanced momentums; the angle between streams also has an optimum as discussed in the referenced monograph.

3.1.2.3 Orifices

Orifices shall not produce stream misimpingement.

In addition to following the practices recommended in reference 2, the GG designer must give special emphasis to the prevention of orifice exit distortion. This particular feature requires greater attention in gas generators than in thrust chambers. No deburring method is acceptable. It is better to leave burrs that follow the streamform (fig. 11(c)) than to attempt deburring. Burrs of the type shown in figure 11(c) can sometimes be converted to the 11(b) type by burnishing. Orifices that are rounded as shown in figure 11(d) are useless and, from a production standpoint, should be regarded as lost. Sometimes a special injector can be saved by surface grinding a rounded-edge orifice to produce a burr similar to figure 11(c) and then burnishing the orifices to the type of burr in figure 11(b); obviously, this is an expensive process. The best design procedure is to produce orifices without burrs. This is best accomplished by specifying that the orifices shall be made by broaching, step drilling, multiple-pass drilling, or by electrical-discharge machining.

3.1.2.4 Film-Cooling Orifices

3.1.2.4.1 Cooling Effectiveness

Film-cooling orifices shall produce maximum wall protection, and the wall shall not disrupt the film.

The film-cooling orifices should be parallel to the wall and positioned so that there is a distance of one orifice diameter between the wall and the edge of the orifice nearest the wall. Do not allow projections into the film-coolant flow. If a part must penetrate the chamber wall, recess it below the face of the wall and do not allow it to project beyond the wall.

3.1.2.4.2 Plugging

Film-cooling orifices shall not be subject to plugging with condensate.

Provide purge ports so located that they will not aspirate moisture into the film-cooling orifices. Provide postrun purges until condensation no longer occurs. If possible, use film-cooling orifices large enough to be self clearing, i.e., minimum diameter should be 0.100 to 0.125 in. (0.254 to 0.318 cm).

Surface-tension-modifying coatings have not been used, but they offer undeveloped possibilities for preventing water accumulation. Once small orifices (<0.06 in. (0.15 cm)) have been plugged by water, they are usually impossible to clear with normal purges; the injector should be disassembled and cleaned.

3.1.2.5 Poppet Valves

3.1.2.5.1 Metering

The poppet shall not meter the injector flow.

Use upstream orifices for metering, as in figure 12. Make the poppet move more than one orifice diameter.

3.1.2.5.2 Hot Streaking

The metering orifice positions shall minimize hot streaks.

Align fuel and oxidizer orifices radially. Locate the fuel orifices on more than one circle, as in figure 12. Do not use concentric fuel-sheet patterns.

3.1.2.5.3 Cooling

The poppet shall be self cooling.

Use high-conductivity materials such as copper if the strength is adequate. For lower conductivity materials, flute the stem to improve cooling, as in figure 12. Use refractory coatings if necessary. Eliminate sharp edges such as a screwdriver slot on the hot face of the poppet.

3.1.2.5.4 Seal Surface

The poppet shall not be held open by particulate contamination, and poppet movement shall not cause damage to the seal surface.

Use a broad, flat, soft seal surface that can envelop particulate contamination and still seal, as shown in figure 12. The seal-to-body contact should be a pure compression contact without any shear components. Avoid conical seats, which tend to shear soft seat material.

3.1.2.5.5 Seal Design

The poppet seal material shall not affect the propellant sheet when the poppet is in the open position.

Use metal-to-metal sealing if possible. Otherwise, put a soft seal material on the body, not on the poppet, as in figure 12. Do not design steps or recesses in the poppet wet face.

3.1.2.6 Manifolds

3.1.2.6.1 Flow Distribution

The manifold shall not cause a mixture-ratio imbalance in the injector elements.

Use manifolds that are long enough in the axial direction to smooth out velocity gradients before the feeder passages are reached. Do not use radial inlets that tend to overfeed heavily a few local feeders. For more detailed recommendations on manifold design, consult reference 2.

3.1.2.6.2 Temperature-Spike Suppression

The manifold shall help suppress temperature surges after cutoff.

Use a manifold volume ratio that provides at least 50 percent excess diluent above that required to react with and dilute the drainable minor propellant at rated mixture ratio.

Use restricted purge ports of about 1/16-in. (0.16 cm) or larger diameter in the minor propellant manifold when that propellant is a well-heated cryogenic. Use 1/4-in. (0.635 cm) ports elsewhere. Use postrun heat soak to clear cryogenic manifolds quickly and evenly if no purges are used.

Locate purge ports at the maximum possible distance from the injector. Be sure to account for propellants that cannot be drained.

Slope storable-propellant manifolds so that propellants drain near each other and not apart or to opposite sides of the chamber.

3.1.2.6.3 Ignition

The manifold shall assist ignition of nonhypergols.

Place propellant entries near each other so that the initial propellant flows into the chamber are in the area in which the igniter can be placed.

3.1.2.7 Interpropellant Seals

There shall be no injector interpropellant leak path.

Avoid the use of seals between propellants, if possible, and separate the propellants by parent metal.

If there must be a seal between nonhypergolic propellants, use a double seal with a vent between seals (such as in the O-ring designs of figs. 6 and 7); use a triple seal with vents between seals for hypergolic propellants. For cryogenic systems, place O-rings in the warmer part of the injector with minimum contact with cold surfaces as shown in figures 6 and 7, not as shown in figure 5.

3.1.2.8 Injector Materials

3.1.2.8.1 Thermal Capability

Injectors shall not be overheated by high local combustion-gas temperatures.

For first attempts with a new injector configuration, use high conductivity metals such as OFHC copper or intermediate conductivity metals such as nickel. After development, a change can be made to stainless steel, aluminum, or a high-strength nickel alloy.

Overheating of the face of an aluminum injector can be eliminated by the use of anodize coating. Mask 1/32 in. (0.08 cm) around the orifices during anodizing to prevent downstream edge buildup from disturbing the emerging stream.

Consult reference 2 for other recommended practices to prevent overheating the injector face.

3.1.2.8.2 Chemical Compatibility

Injectors shall not be damaged by chemical attack by the propellants or propellant-related products, by combustion products, or by the atmosphere.

Do not use metals that corrode easily, e.g., most high-strength steels.

When nitrogen tetroxide or nitric acid is used with ammonia, amines, or hydrazines, use aluminum or stainless steel for injector materials; do not use copper. If copper is used, electroless plate the injector, including the orifices, with nickel. Nickel can be used with nitrogen tetroxide but not with nitric acid.

When fluorine is the oxidizer, copper is preferred because of its high thermal conductivity; however, its relatively low ignition temperature usually requires that the copper be nickel plated. Nickel has a much higher ignition temperature. Aluminum and stainless steel have been used successfully where temperatures and heat fluxes are low; however, the probability of trouble from hot spots is greater, and these materials usually are not worth the risk.

Atmospheric corrosion of the outer injector interfaces often is a cause for complaint, although no trouble has ever been traced to it. Painting or plating will prevent controversy on this subject.

With oxygen and hydrocarbons, alcohols, or hydrogen, use copper, nickel, or nickel alloys. Aluminum can be used if the face temperature is kept low, and stainless steel if the injector heat flux is low.

3.1.2.8.3 Grain Growth

Injector face materials shall not be subject to failure due to metal grain growth during operation.

Use materials (such as stainless steel, aluminum, or zirconium copper) that are not subject to significant grain growth at operating temperatures. If materials used are subject to a significant grain growth (e.g., copper, nickel, and some chrome-copper alloys), keep the face temperature below the level at which significant grain growth occurs, or change materials.

3.1.2.8.4 Handling Features

Injector orifices and seal surfaces shall not be subject to damage during handling.

Recess the injector face and seal surfaces at least 1/16 in. (0.16 cm).

3.1.3 Accessories

3.1.3.1 Igniters

3.1.3.1.1 Location

Igniter location shall promote ignition and reduce the likelihood of hard start.

Locate the igniter near the injector face, at the point of initial propellant entry, where it can ignite the first bit of combustible mixture to enter the chamber. When propellant manifold design provides initial flow stagnation points in the same general area, locate the igniter under the stagnation points. When the stagnation points are opposed, locate the igniter midway between the stagnation points. In either case, the igniter should be not more than about 1 to 1½ in. (2.5 to 3.8 cm) below the face of the injector. Locating the igniter near the interface between stratified flows can be beneficial.

3.1.3.1.2 Installation

The igniter installation shall not subject the igniter to burning,

Design the igniter installation so that the igniter does not protrude into the chamber. Recessing the tip up to 1/8 inch (0.32 cm) is beneficial.

3.1.3.2 Igniter Boss

Igniter boss seals shall not fail because of high seal temperature.

Minimize the seal temperature by minimizing the heat load to the boss seal and by maximizing the heat rejection from the boss to a heat sink (see fig. 13). Do not put an igniter boss along the part of the chamber wall that operates at combustion gas temperature.

If a boss is not attached to the flange, keep the stagnant cavity L/D about 4:1 or more.

3.1.3.3 Flanges

3.1.3.3.1 Thermal Capability

3.1.3.3.1.1 Postrun Heat Soak

Heat soak of the manifold after cutoff shall not damage the injector- to-manifold seal or lower the strength of the injector and manifold flanges.

For low heat-soak temperatures, use O-ring seals of standard materials, such as Buna-N and butyl. For hydrogen systems, use Viton A and special fuel-resistant silicone materials.

For temperatures destructive to Viton A, use heat-block methods such as insulating layers (fig. 14), airgaps (fig. 15), or thin body walls in conjunction with thick manifold walls to reduce the maximum temperature of the seal. As an alternative, use pressure-actuated metal seals, or eliminate the seal by welding or brazing the injector flange to the manifold.

3.1.3.3.1.2 Operation

Injector-to-chamber seals shall not fail when subjected to combustion-gas temperature.

If practical, weld the joint; if it cannot be welded, use metal seals of the inflating type, with a K or U shape. Do not use rubber or other composition seals.

3.1.3.3.2 Seal Surface Durability

Injector flange seals shall not leak on reassembly.

Use hard materials for injector bodies, rather than soft materials such as copper or a soft aluminum. If soft materials are used, use the thermal-protection concepts of sections 3.1.2.1.1 and 3.1.3.1.2 to minimize flange temperature. If required, use hard surface coatings such as nickel, chrome, or hard-anodize. With hard-anodized surfaces, grind the seal surface to reduce roughness and porosity.

Do not use seals (such as chevron seals) that mark the flange seriously. If a marking type seal must be used, use a K-seal in preference to a chevron seal.

3.1.3.3.3 Injector Removal Provisions

Injectors with piston seals shall not be damaged on disassembly.

Use two or three equally spaced threaded holes in the injector flange to serve as jackscrews.

3.1.3.4 Fasteners

3.1.3.4.1 Thermal Growth

Gas generator hot-flange fasteners shall withstand the thermal growth of the clamped parts without yielding.

Use unusually long fasteners that provide at least 0.020 in. (0.051 cm) of elastic deflection. Use washers or a similar elastic sleeve to load the bolt. Do not use springs for loading in high-temperature service.

3.1.3.4.2 Spacing

Flange fastener spacing shall be adequate to prevent leakage.

Space the fasteners close to each other and to the bosses. Use internal- wrenching bolts near bosses and other bolt-pattern interruptions to minimize the unclamped span. Use hex-head bolts where clearance and span is not a problem.

3.1.3.4.3 Material Identification

The proper fastener bolt shall be distinguishable from all similar-appearing bolts of lesser strength.

Use standard stainless steel bolts if at all possible. If special high-strength bolts are used, make the bolt geometry unusual (e.g., by using internal-wrenching heads or heads that are several times thicker than normal), or else permanently mark the fasteners. Paint and similar colorings should not be used because they chip off, burn off, or become smoke-covered and may be missed. Call for special safety inspections of fastener installation to check use of proper bolts.

3.1.3.5 Auxiliary Injectors

An auxiliary injector shall provide local coolant injection adequate to prevent persistent major hot streaks and spots.

For hot-streak gas-flow momentum that will not destroy a liquid sheet, use an Enzian-plate auxiliary injector similar to that of figure 17. For higher levels of momentum, use a swirl-nozzle auxiliary injector on a probe, as in figure 5. In either case, somewhat less than 10 percent of the diluent flow should be adequate. The type of auxiliary injector may have to be determined experimentally. Do not attempt to cool the hot streak by long free jets of diluent.

3.1.3.6 Drains

Gas generator chamber drains shall provide adequate drainage in both the vehicle erect and transport positions.

Install bosses as shown in figure 9 at the chamber low points in both the vehicle erect and transport positions, or use existing ports if they are located in the proper positions. Drains are needed not only for storable propellants, but also for water condensate in purely cryogenic systems.

3.2 Monopropellant Gas Generators

The monopropellant shall have a highly developed background in turbine-drive-system use.

Use hydrogen peroxide or hydrazine. If other propellants are used, anticipate a considerable development program.

3.2.1 Chamber

The chamber type shall be suitable for the flowrate and extent of reaction required.

For H_2O_2 chambers, use a catalytic gas generator with a solid catalyst in a bed; liquid-catalyst systems rarely are worth the complexity they require. For N_2H_4 chambers, use a catalytic bed for exhaust-gas temperatures below 1700° to 1900°F (1200 to 1311K). Above this temperature range, thermal reactors may be used if effort can be afforded to work on recirculation patterns to eliminate quenching.

3.2.1.1 Size

3.2.1.1.1 Bed Depth

Chamber size shall be adequate to obtain complete decomposition in the catalyst bed.

For H_2O_2 chambers, set the catalyst bed flow area to provide a bed flux of less than 20 lb/min/in^2 (1.41 kg/min/cm^2). Provide a minimum bed depth of at least 3 in. (7.62 cm) and, if long life is required, increase the depth to 6 in. (15 cm). For further details, see reference 18.

For N_2H_4 chambers, the sizing criteria are more open to variation. With catalysts of the nickel-cobalt-iron type, use the sizing methods of reference 19. With Shell 405 catalysts, the sizing studies have been compromised by the use of measured temperatures. For this catalyst, two methods appear to be as good or better than the methods based on measured temperatures:

(1) Use the approach of reference 19, but increase stay time in the upper bed by 10 percent or more.
(2) Correlate several sets of experimental data on bed stay time and temperature (indirectly computed from nozzle flow) for different size beds; base bed design on the relations obtained.

3.2.1.1.2 Upper Chamber Volume

Chamber size shall be adequate to prevent flow channeling in the catalyst and overheating of the injector and manifold.

For stream-type injectors, provide an open volume above the catalyst of about 50 percent of the volume of the catalyst pack. For micro-orifice injectors and other efficient atomizers, this volume can be reduced to about 25 percent. Because of potential problems from heat transfer, complete elimination of upstream volume is not recommended even with efficient atomizers.

3.2.1.2 Heat Control

3.2.1.2.1 Bed/Chamber Wall

The heat transfer between the catalyst bed and the chamber wall shall be a minimum.

Design the bed to have minimum possible depth so that wall contact area is minimal. Liners and coatings may be helpful, although they have not been studied.

3.2.1.2.2 Injector/Chamber Wall

The heat transfer between the hot chamber wall and the injector shall be a minimum.

To reduce conduction, use a high injector dome of thin-wall configuration and use special flange designs as recommended in section 3.1.3.3.1. Do not place injectors in contact with the catalyst bed.

3.2.1.3 Trays and Retainers

3.2.1.3.1 Pressure Drop

Catalyst bed pressure drop shall not be great enough to cause crushing of the catalyst.

Use trays for N_2H_4 pellet-type beds to provide support against the pressure loading. The method of reference 19 can be used to determine tray pressure loading; however, the data therein are for long duration. For short durations, higher pressure drops can be used; the limit then must be determined experimentally. For very large gas generators, consider a radial-inflow bed design. With H_2O_2 screen packs, use a coarser screen in the lower portion of the bed rather than tray supports.

3.2.1.3.2 Compression

The catalyst bed shall not be unpacked or disturbed by starting surges.

The installation system used should provide positive locking of tray position by techniques such as stops or welding. For most designs, trays made from 1/4-in. (0.64 cm) or thicker material are adequate. Do not use screens for trays. Do not use springs for clamping devices. Provide posts to support the bottom tray when spans are large.

3.2.1.3.3 Flow Restriction

Bed support plates shall not restrict the flow.

Provide sufficient perforations in the plates to prevent flow restriction. The bed support plates should have a flow area at least equal to 50 percent of the plate area normal to the flow. If this cannot be achieved structurally, passages through the plates may have to be contoured with classical streamlining techniques to reduce pressure drop.

3.2.1.3.4 Outlet

For long-life applications, the chamber outlet configuration shall prevent catalyst particles from going through the turbine.

Make the lower chamber large enough so that particles will drop out, and use a Borda tube (reentrant) outlet so that particles will not be swept up in the discharge flow.

3.2.1.4 Seals

3.2.1.4.1 Thermal Capability

Neither operating temperatures nor postrun heat soak shall damage the seals.

Locate the seal as near to the injector as possible. See section 3.1.3.3 for recommended practices for bipropellant gas generators, which are also applicable for monopropellant gas generators.

3.2.1.4.2 Compatibility

Seal materials shall not be damaged by the propellants or by decomposition products.

Do not use copper-containing seals. See reference 22 for seal material compatibility.

3.2.1.5 Supports

Mounting lugs shall not thermally yield or distort.

Locate the mounting lugs in a cool area, e.g., on the injector flange.

3.2.1.6 Materials

Chamber material shall withstand the maximum expected combustion temperature.

For hydrazine, use a design temperature between 1800°F and 2100°F (1256K and 1422K) near the reaction zone. For hydrogen peroxide, use the final theoretical combustion temperature near the combustor exit. Use reference 22 for information on materials that will withstand these temperatures and simultaneously satisfy other requirements.

3.2.2 Catalyst

3.2.2.1 Bed or Pack

3.2.2.1.1 Load on Pellets

Catalyst pellets shall not be subject to excessive loads during operation or handling.

Use support trays to control loads during operation as covered in section 2.2.1.3. Consider the use of a separate canister for applications in which handling and vibration are potentially serious problems.

For hydrogen peroxide with pellet catalysts without trays, use a bed mass flux no higher than 8 lb/min/in^2 (0.56 kg/min/cm^2). For hydrogen peroxide with screen catalysts, use a flux in the range 10 to 20 lb/min/in^2 (0.7 to 1.4 kg/min/cm^2).

Bed fluxes as high as 0.08 lb/sec/in^2 (0.006 kg/sec/cm^2) have been reported in studies of hydrazine thrusters using Shell 405 catalyst (ref. 24); this is very high for long-duration operation of gas-generator reactors. The maximum loadings given in reference 19 are a good conservative guide, since most of the other recent catalyst developments use a similar carrier with only moderate improvements in crush strength.

3.2.2.1.2 Pellet Restraint

Catalyst beds shall neither move nor unpack.

Use retainer plates that will apply a compressive force to the bed at all times, as shown in figure 18. No general load can be given for pellets, but screen catalysts should have about 2000-psi (13.8 MN/m^2) preload. Pack pellet beds firmly by hand; be careful in the use of motor vibrators to help settle the bed, because excessive powdering occurs readily. Use posts such as those shown in figures 18 and 19 to support the lowest retainer plate.

3.2.2.1.3 Reduction of H_2O_2 Exhaust-Gas Temperature

Lowering of the exhaust temperature of decomposed hydrogen peroxide shall not result in instability or popping.

Use water dilution to lower the temperature. Do not attempt to lower the temperature by producing incomplete decomposition of the hydrogen peroxide.

3.2.2.1.4 Measurement of N_2H_4 Exhaust-Gas Temperature

The technique for measuring gas temperature shall provide valid gas-temperature data.

Use the gas-composition technique to determine gas temperature (ref. 19). Do not base catalyst bed designs on temperature measurements obtained with thermocouples.

3.2.2.2 Catalyst Materials

3.2.2.2.1 Sintering

Hydrogen peroxide screen catalysts shall not melt, sinter, or erode during operation.

Use silver-palladium screens for the top 1/2 in. (1.27 cm) of the bed, silver-plated stainless steel screens from 1/2 to 1½ in. (1.27 to 3.81 cm), and plain steel or nickel screens for the rest of the pack as needed.

3.2.2.2.2 Availability

Hydrazine catalyst material availability shall be sufficient for the entire development and production program.

For small programs, use Shell 405 catalyst. For large programs in which the total consumption of iridium in Shell 405 is prohibitive, the less reactive nickel-cobalt-iron catalysts available from several vendors should be used. Shell 405 pilot beds can be used for starting larger beds.

3.2.2.3 Poisons

The gas generator shall neither contain nor use materials that are poisonous to the catalyst or that coat the catalyst.

For hydrogen peroxide, use no plating, soldering, or brazing materials that contain tin, zinc, or cadium. Use welded joints rather than brazed joints. Avoid sulfur-containing materials. Use purges of air or nitrogen rather than CO_2. Do not use dry-ice refrigeration for assembly or environmental testing. Avoid coating the catalyst with water. If the catalyst becomes coated with water, remove the water by air or nitrogen purging and mild heating. Use only low-pressure (2 to 5 psi (0.014 to 0.034 MN/m^2)) dry gas. For hydrazine, follow the above recommendations; in addition, avoid poisoning from sterilizing solutions such as ethylene oxide and Freon 12.

3.2.2.4 Wall Dams

Monopropellants shall not bypass the catalyst bed by flowing down the wall.

Use wall dams, either in the form of floating piston rings or in the form of attached tray edges (fig. 19).

3.2.3 Injector

3.2.3.1 Orifices

The liquid propellant flow shall be uniformly distributed at low velocity over the catalyst bed inlet.

Use micro-orifice injectors or swirl-cup nozzles for propellant injection wherever possible; otherwise, use splash plate or stream impingement to atomize orifice jets and kill their momentum. Do not place the catalyst bed against the injector.

3.2.3.2 Manifolds

3.2.3.2.1 Manifold/Chamber Attachment

Heat conduction from the chamber shall not cause thermal decomposition within the manifold, either during operation or after cutoff.

Use a remote manifold connected by thin-wall tubes as shown in figure 18. Do not structurally couple the injector and the manifold.

3.2.3.2.2 Inlets

Manifold propellant inlet distribution shall not cause bed penetration and local flooding.

Avoid a large variation in stagnation pressure at the inlets of the injector elements. Use tangential entries, dams, or other devices in injector manifolds to break up the high-velocity inlet stream. Use a micro-orifice pattern to reduce stream momentum. See reference 2 for a more detailed discussion of recommendations for producing uniform flow distribution in the manifold.

3.2.3.3 Injector Face

The injector face shall be thermally isolated from the catalyst bed and shall provide capability for even distribution of propellant at a minimum weight.

Use a dome-shaped injector as shown in figure 18 with swirl nozzles and as thin a wall as possible to reduce conduction. Use many injection ports. A lower dome could be used with a micro-orifice injector, but contact with the bed should still be avoided.

3.2.4 Accessories

3.2.4.1 Fasteners

3.2.4.1.1 Thermal Creep

Bolts shall not be subjected to excessive temperatures that accelerate creep.

Locate the flange in the coolest area possible, e.g., near the injector.

3.2.4.1.2 Compatibility

Bolts shall not be damaged by incompatibility with the propellants or decomposition products.

Use stainless steel bolts, not carbon steel bolts, with a hydrogen peroxide GG. See reference 22 for material compatibility. Bolts used with hydrazine should be rust-free and without cadmium, zinc, or copper plating.

3.2.4.2 Igniters

3.2.4.2.1 Igniter Performance

The ignition of monopropellants shall not result in excessive delays or surges.

For hydrogen peroxoide, use any of the modern catalysts without an auxiliary ignition system so long as the propellant is more than a few degrees above its freezing point.

For hydrazine, use Shell 405 catalyst without an auxiliary ignition system. With JPL-developed catalysts, use a hypergolic salt such as $KMnO_4$ placed as recommended in section 3.2.4.2.2, or a liquid salt, or else use a solid propellant charge to preheat the catalyst bed. Do not use electrical coils for heating.

3.2.4.2.2 Igniter Retention

Starting crystals for a hydrazine gas generator shall be retained on the upper retainer plate and shall not contact the bed.

Use an upper retainer plate with channels or wells to hold the starter crystals (fig. 20). For very hot ignition crystals, coat the upper retainer plate with a refractory material to protect it.

3.3 Common Problems

3.3.1 Pressure Measurement

3.3.1.1 Type of Measurement

Pressure measurements in the combustion or hot-gas zone shall be correlative with total pressure.

Use injector-end static-pressure measurements for combustors in which the injector-end Mach number is low. If the gas speed and direction are not known and the stagnation effect may be fairly high, use Kiel probes to obtain total pressure.

Where static pressures are sensed along a wall, use 1/16-in. (0.16 cm) diameter holes normal to the flow surface.

3.3.1.2 Tap Location

Pressure tap lines shall not be damaged by decomposition of trapped monopropellants.

Place pressure taps on top of the equipment so that they will be self draining. Do not locate injector pressure taps in hot flanges.

3.3.2 Temperature Measurement

3.3.2.1 Thermocouple Durability

Thermocouples used for measurement of exhaust-gas temperatures shall not be damaged by the temperature and pressure environment.

Thermocouples protected by 1/4-in. (0.635 cm) metal tubing shields should not be immersed beyond eight diameters when the temperature exceeds 1400°F (1033K) and dynamic pressure is high. When deeper immersion is required, use shields that are larger than 1/4 in. (0.635 cm), or use airfoil-shaped shields.

3.3.2.2 Thermocouple Insulation

Thermocouple insulation shall not absorb propellants or combustion products.

Use closed thermocouple shields. For a very limited number of cycles, a Sauereisen-cement seal may be adequate. Do not use a shield with the powdered MgO insulation or other absorbent insulation exposed to the chamber gases. A gas-tight seal must be maintained.

3.4 Testing

3.4.1 Bipropellant Gas Generator

3.4.1.1 Objectives

3.4.1.1.1 Reduction of Start Damage

Initial testing shall minimize damage potential during start.

Make individual system blowdowns to obtain chilldown characteristics, system pressure gradients, and valve sequence and to check out controls and instrumentation. Initial tests should start with approximately 0.25 sec bipropellant flow time and with an oxidizer temperature slightly higher than saturation for cryogenic oxidizers. This higher temperature with lowered density and short duration will prevent serious hardware damage. Vary initial propellant temperature until ignition is reliable. When durations of 1 sec show no impending damage, duration usually can be increased rapidly.

3.4.1.1.2 Identification of Hot Spots

Early testing shall locate and instrument hot spots.

Use temperature-indicating paints to define hotter zones of the chamber. Zinc chromate is a good paint that is inexpensive and changes color from bright yellow to dark brown or black at a fairly precise temperature; this change gives a precise location of hot spots. After the hot spots are located, thermocouples should be attached and monitored during further testing to full duration and during evaluations of hardware modifications.

3.4.1.1.3 Demonstration of Operational Range

Development test conditions shall maximize the sensitivity to hot streaking or instability.

Conduct most durability testing at the conditions defined by maximum flowrate, chamber pressure, and gas temperature. This practice will evaluate hot streaking under the most serious condition. Frequent testing at minimum conditions will evaluate the design's sensitivity to instability. When tests are routine and satisfactory, then testing at the other six extreme conditions will complete testing for operational suitability. A total of eight conditions (corners of a cube) are needed to define all maximum and minimum conditions of the three basic variables: flowrate, chamber pressure, and gas temperature.

3.4.1.1.4 Demonstration of Repeatability

Repeatability testing shall be limited.

Bipropellant gas generators have shown little change with accumulated duration, and effort should not be wasted redemonstrating this point.

3.4.1.2 Problem Areas

3.4.1.2.1 Inlet Lines

The test installation shall simulate the engine plumbing in the vicinity of the gas generator valve.

Route any cryogenic lines so as to duplicate the engine installation for 3 to 6 ft (0.9 to 1.8 m) upstream of the GG valve. If bleeds are used on the engine, use the same locations to bleed the test lines. Do not place the valve at the lowest point of the system unless this location duplicates the engine installation. Bleed the system just upstream of the engine simulator lines to obtain a similar gas/liquid interface.

3.4.1.2.2 Feed Lines

Initial feed pressure shall duplicate operating pressures so that starting transients are representative of the engine.

Keep system pressure losses as low as possible so that stability and control are enhanced. Do not permit prestart line pressures to exceed operational levels by more than 50 percent. If necessary, use a bleed to keep pressures low and sequence the bleed to close after GG flow has started.

3.4.1.2.3 Purge Systems

Purge systems shall maintain stringent regulation of pressure from zero flow to full flow.

Test purge systems at zero flow before firing the gas generator. Pressure regulation must remain consistent with operational requirements at all levels. At zero purge flow, pressure must not exceed manifold pressures and should be under 90 percent of manifold static pressure. At full purge flow, positive manifold pressure should be maintained in the manifold to prevent contamination. The balance between fuel and oxidizer purges usually must be determined experimentally so that temperature spikes on start and cutoff are suppressed.

3.4.1.2.4 Hot-Gas System

Hot-gas ducts used in testing shall approximate the acoustic dimensions of the engine installation.

Provide the equivalent volume of the turbine manifold and hot-gas duct between the gas generator and the sonic nozzle used for chamber pressure restriction. Use a single duct where the turbine has a tangential (single flow direction) inlet, and two ducts where the turbine has a radial (flow split in two directions) inlet.

3.4.1.3 Data Utilization

Test data for system analysis shall be in the form of, or convertible to, total pressures and temperatures.

Either install total-pressure and -temperature probes for testing or compute dynamic pressures and temperatures and add to static readings. Since dynamic effects are usually small numerically, sizeable errors can be tolerated as preferable to no correction at all. When using static pressures, be cautious that the sensing tap is not affected by classical curvature effects on static pressure. Radiation losses from temperature probes should be calculated if unshielded probes are used or if the gases are transparent.

3.4.1.4 Contamination and Safety

3.4.1.4.1 Purge System Separation

The purge system shall not cause contamination of the manifolds.

Install the purge system with the following features:

(1) Two check valves in series on each purge line.
(2) Two regulators, one for each side of the system.
(3) Separate purge feed lines all the way to the reservoir if possible.
(4) Enough capacity to maintain positive manifold pressures under full flow.

3.4.1.4.2 Safety

Test crews shall be alert to clues of dangerous conditions.

Crews should be cautioned about the following conditions:

- Frosted chamber – Probably there is a detonable mixture in the chamber. Do not touch until well warmed.
- Fuel in oxidizer manifold instrument lines – Contaminated manifold should be well warmed before it is touched so that it does not detonate.
- Fuel in purge system check valves – Purge system is contaminated. Clean all the way upstream to the reservoir if necessary.

3.4.2 Monopropellant Gas Generator

3.4.2.1 Objectives

3.4.2.1.1 Reduction of Start Damage

Initial propellant flows shall not be so large that bed flooding occurs.

Slow the valve opening until reliable starting is obtained. An exponential flow buildup is desirable for most applications. Low-level operation of 2 to 3 sec usually is a safe starting point.

3.4.2.1.2 Control of Duration Effects

Decomposition efficiency shall be determined after full-duration testing.

Few long tests should be made rather than many short tests so that catalyst bed sintering and reduction in porosity are maximized. Initial decomposition results can be quite misleading. The use of propellants at higher-than-normal concentration will accelerate the sintering process. Use chamber restrictors larger than normal to increase bed differential pressure.

3.4.2.2 Problem Areas

The method for measuring hydrazine exhaust-gas temperatures shall be sufficiently accurate to verify the acceptability of the gas generator design.

Do not use thermocouples; as noted frequently in the monograph, temperature measurements of the exhaust gas obtained with thermocouples are subject to significant errors of unpredictable magnitude.

A good method for measuring gas temperatures of hydrazine decomposition products has not yet been developed; this lack of a technique represents a major technology void in the design of hydrazine gas generators. There are two promising but yet unproved approaches for determining gas temperatures that should be considered:

(1) Use gas chromatography to determine gas composition accurately, and calculate the temperature on the basis of the composition.
(2) Measure pressure profiles over the area of the nozzle, and calculate temperature from the thermodynamic equations for gas flow.

3.4.2.3 Contamination and Safety

Welds shall be completely clean of scale and oxides.

Grind or etch all welds in contact with the propellant to remove oxides. Weld pores should be given particular attention. The use of aluminum materials eliminates most of the oxide problem.

REFERENCES

1. Anon.: Turbopump Systems for Liquid Rocket Engines. Space Vehicle Design Criteria Monograph (to be published).

2. Anon.: Liquid Rocket Engine Injectors. Space Vehicle Design Criteria Monograph, NASA SP-8089 (to be published).

3. Abramovitch, G. N.: The Theory of Turbulent Jets. MIT Press, 1963.

4. Ginevskiy, A. S.: Turbulent Non-Isothermal Jet Flows of Compressible Gas. Promyshlennaya Aerodinamika, no. 23, Moscow, 1962 , pp. 11-65. (Also available as trans. FTD-MT-66-171, pp. 9-64.)

5. Abramovitch, G. N.: Mixing Turbulent Jets of Different Density. Izvest. Akad. Nauk S.S.S.R., Ot. Tekh. Nauk, Mekhanika i Mashinostroyeniye, no. 3, 1961, pp. 55-57. (Also available as trans. FTD-TT-63-222/1+2+4, pp. 31-37.)

6. Vulis, L. A.; and Kashkarov, V. P.: Theory of Viscous-Fluid Jets. Moscow, 1965. (Also available as trans. FTD-HT-23-669-67.)

7. Sommers, R.; and Mower, W. W.: Development of an Alcohol-Oxygen Gas Generator for Use With MX-770 Propulsion System. Aerophysics Lab. Rep. AL-1294, North American Aviation, Inc., July 31, 1951.

8. Emerich, G. G.: Further Experimental Study of the Alcohol and Liquid Oxygen Gas Generating System. Aerophysics Lab. Rep. AL-1146, North American Aviation, Inc., Nov. 15, 1950.

9. Koelle, H. H.; et al.: Handbook of Astronautical Engineering. McGraw-Hill Book Co., Inc., 1961.

10. Anon.: Liquid Rocket Engine Fluid-Cooled Combustion Chambers. Space Vehicle Design Criteria Monograph, NASA SP-8087 (to be published).

11. Adelberg, M.: Three Advanced Micro-Orifice Injector Rocket Motors. AIAA Paper 67-462, presented at AIAA Third Propulsion Joint Specialist Conf. (Washington, DC), July 17-21, 1967.

12. Anon.: Advanced Injector Concepts Investigation. Final Report 21052-3F, Aerojet-General Corp., April 30, 1971.

13. Anon.: Advanced Injectors for Space Storable Propellants. Final Report 713-F, Aerojet-General Corp., Oct. 3, 1969.

*14. Greene, S. A.: The Performance and Combustion of Fuel-Rich Liquid-Oxygen/Kerosene Gas Generators. RM 517/92 (Rocketdyne Internal Research Memo), Rocketdyne Div., North American Rockwell Corp., June 26, 1959.

*Dossier for design criteria monograph "Liquid Propellant Gas Generators." Unpublished, 1969. Collected source material available for inspection at NASA Lewis Research Center, Cleveland, Ohio.

15. Ito, J. I.: Development of LO_2/LH_2 Gas Generators for the M-1 Engine. NASA CR-54812 (AGC 8800-59), Aerojet-General Corp., June 1966.

*16. Petersen, A.C.; and Wadas, T. A.: Model F-1 Storable Summary Report. CER0121-3000 (Rocketdyne Internal Report), Rocketdyne Div., North American Rockwell Corp., Jan. 25, 1960.

*17. Sheller, D.; and Zehetner, H. C.: Storable Propellant Gas Generator Test Results. CEM 921-3043, Rocketdyne Div., North American Rockwell Corp., Sept. 30, 1959.

18. Davis, N. S.; and McCormick, J. C.: Design of Catalyst Packs for the Decomposition of Hydrogen Peroxide. Liquid Rockets and Propellants (L. E. Bollinger, M. Goldsmith, and A. W. Lemmon, Jr., eds., vol. II of Astronautics and Rocketry, M. Summerfield, ed.), Academic Press, 1960, pp. 589-616.

19. Grant, A. F., Jr.: Basic Factors Involved in the Design and Operation of Catalytic Monopropellant-Hydrazine Reaction Chambers. Rep. 20-77 (AD77127), Jet Propulsion Laboratory, California Institute of Technology (Pasadena, CA), Dec. 31, 1954. (Available from Chief of Ordnance, Attn: ORDTX-AR, Washington, DC.)

20. Voge, H. H.; et al: Development of Catalysts for Monopropellant Decomposition of Hydrazine. Final Report S-13889, Shell Development Co., (Emeryville, CA), June 1963.

21. Anon.: Development of Design and Scaling Criteria for Monopropellant Hydrazine Reactors Employing Shell 405 Spontaneous Catalyst. RRC-66-R-76, vols. I and II, Rocket Research Corp., Jan. 19, 1967.

22. Kit, B.; and Evered, D. S.: Rocket Propellant Handbook. The MacMillan Co., 1960.

23. Armstrong, W. E.; Morgan, C. Z.; and Voge, H. H.: Hydrazine Nitrate Catalyst Development Quarterly Report 1 (U).S-14024, Shell Development Co., Feb. 1967. (Confidential)

24. Price, T. W.; and Evans, D. D.: The Status of Monopropellant Hydrazine Technology. Tech. Rep. 32-1227, Jet Propulsion Laboratory, California Institute of Technology (Pasadena, CA) Feb. 15, 1968.

25. Runckel, J. F.; Willis, C. M; and Salters, L. B., Jr.: Investigation of Catalyst Beds for 90-Percent-Concentration Hydrogen Peroxide. NASA TN D-1808, June 1963.

*Dossier for design criteria monograph "Liquid Propellant Gas Generators." Unpublished, 1969. Collected source material available for inspection at NASA Lewis Research Center, Cleveland, Ohio.

GLOSSARY

Term or Symbol	Definition
A_t	area of chamber throat
afd	active face diameter
APS	auxiliary power systems
BHP	brake horsepower
bleed	remove or draw off fluid from a system
c*	characteristic velocity, $c^* = P_c A_t g/\dot{w}$
coaxial injector	type of injector in which one propellant surrounds the other at each injection point
coking	developing a residue when burned or distilled
cryogenic propellant	propellant that is liquid only at temperatures below − 180°C (93 K)
diluent	fluid (often excess fuel) added to the exhaust gas to cool the gas below the temperature resulting from chemically balanced combustion
doublet	an injector orifice pattern consisting of two converging streams
electroless plating	chemical reduction process for deposition of a metallic coating
"energetic" propellants	bipropellants that contribute energy to the exhaust gas through exothermal decomposition prior to oxidation reactions
Enzian-plate injector	type of injector that produces atomization by impingement of a jet on a solid plate
g	acceleration due to gravity
GG	gas generator
H	radius of larger diameter wall or passage enlargement in GG chamber
hot-core injector	an injector designed to operate with a higher temperature mixture ratio in the central area than in the outer surrounding area
hot-short	having low elongation (brittle) at elevated temperatures

Term or Symbol	Definition
hypergolic propellants	propellants that ignite spontaneously when mixed with each other
Kiel probe	a total-pressure probe consisting of an impact tube surrounded by a smoothly contoured ring that collects and converges the flow stream
L^*	characteristic chamber length , $L^* = V_c/A_t$
L/D	length-to-diameter ratio
mixture ratio	mass flowrate of oxidizer divided by mass flowrate of fuel
"normal" propellants	bipropellants that derive thermal energy primarily from oxidizer–fuel reactions
P_c	chamber pressure
poison	any material that interferes with catalytic action
popping	sudden, short - duration surges of combustion pressure
potential core	length of unmixed flow
purge	gas flow used to clear a volume (e.g., a manifold) of propellant or combustion products
quincunx	a geometrical pattern in which four items are equally spaced around a central item
storable propellant	a propellant with a vapor pressure such that the propellant can be stored in a specified environment (earth or space) at moderate ullage pressures without significant loss over the mission duration
stay time	the average length of time spent by each gas molecule or atom within the combustion chamber
t_s	stay time
triplet	an injector orifice pattern consisting of three orifices that produce streams converging to a point; usually fuel is injected through outer orifices, and oxidizer is injected through the central orifice
turbopump	an assembly consisting of one or more pumps driven by a hot-gas turbine
UMR injector	uniform mixture ratio injector: an injector designed to operate with nearly constant mixture ratio in all zones of the injector

Term or Symbol	Definition
V_c	chamber volume
$\dot{w}$	mass flowrate
X_M	potential-core length of a reverse-flow system
X_{ShCh}	potential-core length of an axial-flow system
ρ	chamber gas density

Material	Identification
A-50; Aerozine 50	50/50 mixture of hydrazine and UDMH per MIL-P-27402
Buna N	trademark for a copolymer of butadiene and acrylonitrile
347 CRES	designation for a columbium-stabilized, austenitic stainless steel
fiberbat	fibrous insulation formed into a blanket
Freon 12	trademark for dichlorodifluoromethane
Hastelloy (B, C, D)	trademark for a series of corrosion- and heat- resistant nickel-base alloys
Haynes 25	trademark for a cobalt- chromium-nickel alloy (AMS 5796)
Inconel (X, 718)	trademark for a series of corrosion- and heat- resistant nickel-base alloys
LH_2	liquid hydrogen
LO_2, LOX	liquid oxygen
MMH	mono-methyl hydrazine
N-155	trademark for a corrosion- and heat-resistant iron-base casting alloy
OFHC copper	oxygen free high conductivity copper
Rene 41	trademark for a precipitation-hardening nickel-base alloy
Rigimesh	porous metal made by sintering a wire matrix (in this monograph, the metal is 347 CRES)

Material	Identification
RJF	ram jet fuel; a high-density, kerosene-like hydrocarbon
RP-1	hydrocarbon fuel specified by MIL-F-25576B, basically a high-paraffin-content kerosene
Sauereisen cement	a class of proprietary high-temperature cement
Shell 405	tradename for a hydrazine decomposition catalyst containing iridium
UDMH	unsymmetrical dimethyl hydrazine
Viton A	trademark for a fluoroelastomer used for rubbery properties in high-temperature applications (up to 589K)

NASA SPACE VEHICLE DESIGN CRITERIA MONOGRAPHS ISSUED TO DATE

ENVIRONMENT

SP-8005	Solar Electromagnetic Radiation, Revised May 1971
SP-8010	Models of Mars Atmosphere (1967), May 1968
SP-8011	Models of Venus Atmosphere (1968), December 1968
SP-8013	Meteoroid Environment Model – 1969 (Near Earth to Lunar Surface), March 1969
SP-8017	Magnetic Fields – Earth and Extraterrestrial, March 1969
SP-8020	Mars Surface Models (1968), May 1969
SP-8021	Models of Earth's Atmosphere (120 to 1000 km), May 1969
SP-8023	Lunar Surface Models, May 1969
SP-8037	Assessment and Control of Spacecraft Magnetic Fields, September 1970
SP-8038	Meteoroid Environment Model – 1970 (Interplanetary and Planetary), October 1970
SP-8049	The Earth's Ionosphere, March 1971
SP-8067	Earth Albedo and Emitted Radiation, July 1971
SP-8069	The Planet Jupiter (1970), December 1971
SP-8084	Surface Atmospheric Extremes (Launch and Transportation Area), May 1972
SP-8085	The Planet Mercury (1971), March 1972
SP-8092	Assessment and Control of Spacecraft Electromagnetic Interference, June 1972

STRUCTURES

SP-8001	Buffeting During Atmospheric Ascent, Revised November 1970
SP-8002	Flight-Loads Measurements During Launch and Exit, December 1964
SP-8003	Flutter, Buzz, and Divergence, July 1964
SP-8004	Panel Flutter, July 1964
SP-8006	Local Steady Aerodynamic Loads During Launch and Exit, May 1965
SP-8007	Buckling of Thin-Walled Circular Cylinders, Revised August 1968
SP-8008	Prelaunch Ground Wind Loads, November 1965
SP-8009	Propellant Slosh Loads, August 1968
SP-8012	Natural Vibration Modal Analysis, September 1968
SP-8014	Entry Thermal Protection, August 1968
SP-8019	Buckling of Thin-Walled Truncated Cones, September 1968
SP-8022	Staging Loads, February 1969
SP-8029	Aerodynamic and Rocket-Exhaust Heating During Launch and Ascent, May 1969
SP-8030	Transient Loads From Thrust Excitation, February 1969
SP-8031	Slosh Suppression, May 1969
SP-8032	Buckling of Thin-Walled Doubly Curved Shells, August 1969
SP-8035	Wind Loads During Ascent, June 1970
SP-8040	Fracture Control of Metallic Pressure Vessels, May 1970

SP-8042	Meteoroid Damage Assessment, May 1970
SP-8043	Design-Development Testing, May 1970
SP-8044	Qualification Testing, May 1970
SP-8045	Acceptance Testing, April 1970
SP-8046	Landing Impact Attenuation for Non-Surface-Planing Landers, April 1970
SP-8050	Structural Vibration Prediction, June 1970
SP-8053	Nuclear and Space Radiation Effects on Materials, June 1970
SP-8054	Space Radiation Protection, June 1970
SP-8055	Prevention of Coupled Structure-Propulsion Instability (Pogo), October 1970
SP-8056	Flight Separation Mechanisms, October 1970
SP-8057	Structural Design Criteria Applicable to a Space Shuttle, January 1971
SP-8060	Compartment Venting, November 1970
SP-8061	Interaction With Umbilicals and Launch Stand, August 1970
SP-8062	Entry Gasdynamic Heating, January 1971
SP-8063	Lubrication, Friction, and Wear, June 1971
SP-8066	Deployable Aerodynamic Deceleration Systems, June 1971
SP-8068	Buckling Strength of Structural Plates, June 1971
SP-8072	Acoustic Loads Generated by the Propulsion System, June 1971
SP-8077	Transportation and Handling Loads, September 1971

SP-8079	Structural Interaction With Control Systems, November 1971
SP-8082	Stress-Corrosion Cracking in Metals, August 1971
SP-8095	Preliminary Criteria for the Fracture Control of Space Shuttle Structures, June 1971

GUIDANCE AND CONTROL

SP-8015	Guidance and Navigation for Entry Vehicles, November 1968
SP-8016	Effects of Structural Flexibility on Spacecraft Control Systems, April 1969
SP-8018	Spacecraft Magnetic Torques, March 1969
SP-8024	Spacecraft Gravitational Torques, May 1969
SP-8026	Spacecraft Star Trackers, July 1970
SP-8027	Spacecraft Radiation Torques, October 1969
SP-8028	Entry Vehicle Control, November 1969
SP-8033	Spacecraft Earth Horizon Sensors, December 1969
SP-8034	Spacecraft Mass Expulsion Torques, December 1969
SP-8036	Effects of Structural Flexibility on Launch Vehicle Control Systems, February 1970
SP-8047	Spacecraft Sun Sensors, June 1970
SP-8058	Spacecraft Aerodynamic Torques, January 1971
SP-8059	Spacecraft Attitude Control During Thrusting Maneuvers, February 1971
SP-8065	Tubular Spacecraft Booms (Extendible, Reel Stored), February 1971
SP-8070	Spaceborne Digital Computer Systems, March 1971

SP-8071	Passive Gravity-Gradient Libration Dampers, February 1971
SP-8074	Spacecraft Solar Cell Arrays, May 1971
SP-8078	Spaceborne Electronic Imaging Systems, June 1971
SP-8086	Space Vehicle Displays Design Criteria, March 1972

CHEMICAL PROPULSION

SP-8052	Liquid Rocket Engine Turbopump Inducers, May 1971
SP-8048	Liquid Rocket Engine Turbopump Bearings, March 1971
SP-8064	Solid Propellant Selection and Characterization, June 1971
SP-8075	Solid Propellant Processing Factors in Rocket Motor Design, October 1971
SP-8076	Solid Propellant Grain Design and Internal Ballistics, March 1972
SP-8039	Solid Rocket Motor Performance Analysis and Prediction, May 1971
SP-8051	Solid Rocket Motor Igniters, March 1971
SP-8025	Solid Rocket Motor Metal Cases, April 1970
SP-8041	Captive-Fired Testing of Solid Rocket Motors, March 1971

☆U.S.Government Printing Office: 1973 — 736-619