NASA SP-8096

NASA
SPACE VEHICLE
DESIGN CRITERIA
(GUIDANCE AND CONTROL)

SPACE VEHICLE GYROSCOPE SENSOR APPLICATIONS

OCT 1972

NATIONAL AERONAUTICS AND SPACE ADMINISTRATION

GUIDE TO THE USE OF THIS MONOGRAPH

The purpose of this monograph is to organize and present, for effective use in space vehicle development, the significant experience and knowledge accumulated in development and operational programs to date. It reviews and assesses current design practices, and from them establishes firm guidance for achieving greater consistency in design, increased reliability in the end product, and greater efficiency in the design effort. The monograph is organized into three major sections that are preceded by a brief *Introduction* and complemented by a set of *References.*

The *State of the Art,* section 2, reviews and discusses the total design problem, and identifies *which* design elements are involved in successful designs. It describes succinctly the current technology pertaining to these elements. When detailed information is required, the best available references are cited. This section serves as a survey of the subject that provides background material and prepares a proper technological base for the *Design Criteria* and *Recommended Practices.*

The *Design Criteria,* shown in section 3, state clearly and briefly what rule, guide, limitation, or standard must be imposed on each essential design element to insure successful design. The *Design Criteria* can serve effectively as a checklist for the project manager to use in guiding a design or in assessing its adequacy.

The *Recommended Practices,* as shown in section 4, state how to satisfy each of the criteria. Whenever possible, the best procedure is described; when this cannot be done concisely, appropriate references are provided. The *Recommended Practices,* in conjunction with the *Design Criteria,* provide positive guidance to the practicing designer on how to achieve successful design.

The design criteria monograph is not intended to be a design handbook, a set of specifications, or a design manual. It is a summary and a systematic ordering of the large and loosely organized body of existing successful design techniques and practices. Its value and its merit should be judged on how effectively it makes that material available to and useful to the user.

For sale by the National Technical Information Service, Springfield, Virginia 22151 – Price $3.00

FOREWORD

NASA experience has indicated a need for uniform criteria for the design of space vehicles. Accordingly, criteria are being developed in the following areas of technology:

Environment
Structures
Guidance and Control
Chemical Propulsion

Individual components of this work will be issued as separate monographs as soon as they are completed. This document, *Space Vehicle Gyroscope Sensor Applications,* is one such monograph. A list of all published monographs in the series can be found on the last pages of this document.

These monographs are to be regarded as guides to design and not as NASA requirements, except as may be specified in formal project specifications. It is expected, however, that the criteria sections of these documents, revised as experience may indicate to be desirable, eventually will be uniformly applied to the design of NASA space vehicles.

This monograph was prepared for NASA under the cognizance of the Jet Propulsion Laboratory, California Institute of Technology. Principal contributors were Mr. William C. Hoffman of Aerospace Systems, Inc., Dr. Walter M. Hollister of the Massachusetts Institute of Technology, and Mr. John R. Mott of Northrop Electronics Division. The program manager was Mr. John Zvara of Aerospace Systems, Inc.

The effort was guided by an advisory panel which was chaired by Prof. Walter Wrigley of MIT. The following individuals participated in the advisory panel and monograph review activities:

R. A. Birch	General Electric, Valley Forge
A. M. Brady	Lockheed, Sunnyvale, Calif.
A. T. Campbell	Jet Propulsion Laboratory
H. A. Dinter	Honeywell, Minneapolis
G. B. Doane	NASA MSFC
B. M. Dobrotin	Jet Propulsion Laboratory
T. A. Fuhrman	TRW Systems
G. Hofmann	Hughes Aircraft
M. W. McMurran	North American Rockwell
M. D. Mobley	The Boeing Company
R. S. Poquette	Singer-Kearfott
W. A. Russell	NASA GSFC

H. Schulien	Bendix, Navigation and Control
W. Talbott	Jet Propulsion Laboratory
D. F. Techentin	Delco Electronics
F. H. Zengel	McDonnell Douglas, St. Louis

Contributions in the form of design and development practices were also provided by many other engineers of NASA and the aerospace community.

Comments concerning the technical content of this monograph will be welcomed by the National Aeronautics and Space Administration, Office of Advanced Research and Technology (Code RE), Washington, D.C. 20546.

CONTENTS

1. INTRODUCTION 1

2. STATE OF THE ART 2

2.1 Gyroscope Purpose and Functions 3
2.1.1 Guidance and Navigation (Low Frequency) 3
2.1.2 Stabilization and Control (Near Vehicle Natural Frequency) 3
2.1.3 Tracking and Pointing (High Frequency) 4
2.1.4 Flight Data Analysis 4

2.2 Types of Gyroscopes 5
2.2.1 Single-Degree-of-Freedom Gyros 5
2.2.1.1 Rate Gyros (Mechanically Restrained) 5
2.2.1.2 Rate-Integrating Gyros 5
2.2.2 Two-Degree-of-Freedom Gyros 7
2.2.2.1 Gimballed Gyros 7
2.2.2.2 Free-Rotor Gyros 8
2.2.2.3 Tuned Rotor Gyros 8

2.3 Configurations 8
2.3.1 Stable-Platform-Mounted 9
2.3.2 Vehicle-Mounted (Strapdown) 10
2.3.3 Hybrid Systems 10

2.4 Modes of Application 11
2.4.1 Attitude Rate Control Using an SDF Rate Gyro 11
2.4.2 Attitude Rate Control Using SDF Rate-Integrating Gyros with Signal Feedback 12
2.4.3 Attitude Stabilization with SDF Rate-Integrating Gyros 13
2.4.4 Attitude Stabilization with 2DF Gyro 13

2.5 Tradeoff Factors 13
2.5.1 Performance 14
2.5.1.1 Precision 14
2.5.1.2 Dynamic Range 14
2.5.1.3 Drift Rate Uncertainty 14
2.5.1.4 Stability 15
2.5.1.5 Scale Factor 15
2.5.1.6 Linearity 15
2.5.1.7 Output Noise 15
2.5.1.8 Temperature 16
2.5.1.9 Anisoelasticity 16
2.5.1.10 Anisoinertia 16
2.5.1.11 Coning 16
2.5.1.12 Error Models 17

2.5.2 Reliability 17
2.5.2.1 Mean Time Between Failure 17
2.5.2.2 Life 18
2.5.2.3 Environment 19
2.5.2.4 Redundancy 19
2.5.2.5 Design Risk 20
2.5.3 Cost 20

2.6 Applications 22
2.6.1 Launch Vehicles 22
2.6.1.1 Centaur 22
2.6.1.2 Scout 26
2.6.1.3 Little Joe II 27
2.6.1.4 Atlas 28
2.6.1.5 Saturn V 28
2.6.2 Spacecraft 30
2.6.2.1 Mercury 30
2.6.2.2 Gemini 32
2.6.2.3 Apollo 32
2.6.2.4 Lunar Orbiter 36
2.6.2.5 Mariner Mars 1971 38
2.6.2.6 Orbiting Geophysical Observatory 40
2.6.2.7 Apollo Telescope Mount 41
2.6.3 Entry Vehicles 42
2.6.3.1 The X-15 42
2.6.3.2 The X-24 and M2-F3 42
2.6.3.3 The ASSET 42
2.6.4 Sounding Rockets 44
2.6.4.1 MK II ACS 44
2.6.4.2 STRAP III 45
2.6.5 Miscellany 46

2.7 Testing and Evaluation 47
2.7.1 Types of Tests 48
2.7.2 Gyroscope System Test Program 49
2.7.3 Test Data Evaluation 49
2.7.4 Prelaunch Checkout and Flight Monitoring 50

2.8 Advanced Concepts 50
2.8.1 Laser Gyro 50
2.8.2 Electrically Suspended Gyro (ESG) 50
2.8.3 Cryogenic Gyro 51
2.8.4 Tuned-Rotor Gyro 51
2.8.5 Vortex Rate Sensors 51
2.8.6 Multisensors 52
2.8.7 Other Devices 52

3. CRITERIA 52
3.1 Applications 52
3.2 System Design 53
3.3 Gyro Selection 54
3.4 Reliability 54
3.5 Testing and Evaluation 55
4. RECOMMENDED PRACTICES 56
4.1 Applications 56
4.1.1 Mission Objectives 57
4.1.2 Environment 57
4.2 System Design 59
4.2.1 Platform vs Strapdown Configuration 59
4.2.2 Alignment and Calibration 59
4.2.3 Signal Processing 60
4.3 Gyro Selection 60
4.3.1 Gyro Selection Tradeoffs 61
4.3.2 Compatibility with Performance Requirements 64
4.3.3 Component Specifications 64
4.4 Reliability 65
4.5 Testing and Evaluation 67
4.5.1 Test Planning — Specifications 67
4.5.2 Component Tests 68
4.5.3 Subsystem Tests 68
4.5.4 System Tests 69
4.5.5 Test Data Evaluation 69
4.5.6 Prelaunch Checkout and Flight Monitoring 70
REFERENCES 71
NASA SPACE VEHICLE DESIGN CRITERIA MONOGRAPHS ISSUED TO DATE 77

SPACE VEHICLE GYROSCOPE SENSOR APPLICATIONS

1. INTRODUCTION

Gyroscopes (or gyros) have been developed and used on a variety of space vehicles to provide information on the attitude or angular velocity of the vehicle or an inertial platform with respect to a reference coordinate system. Spaceborne gyro applications can be conveniently categorized by their information bandwidth requirements:

(1) Guidance and navigation (very low frequency)

(2) Attitude reference and stabilization (near vehicle natural frequency)

(3) Tracking and pointing (very high frequency)

(4) Flight data analysis.

Gyro technology was adapted from aircraft to launch vehicles to provide attitude reference and stabilization as part of the autopilot. As their performance and reliability improved, gyros became suitable for use in space vehicle guidance and navigation systems, where they establish the inertial reference frame in which vehicle motions are measured. More recently, gyros have been employed for tracking and pointing of space vehicle experiments and/or communications antennas. Finally, spaceborne gyroscopes have been widely used to monitor vehicle motions during flight and provide telemetry information for postflight data analysis. Although this last function has generally been a secondary reason for gyro use, it often has proven extremely valuable, particularly on early developmental flights.

The gyroscopes are key elements in any of the aforementioned real-time applications. As a result, the performance of the associated space vehicle system is strongly dependent upon the performance of the gyros. It is therefore essential that the gyroscope package be designed consistent with the mission requirements in order to provide the required information, accuracy and reliability. Failure to do so may result in degradation of mission performance or, in the extreme, total mission failure. Thus the program manager must be aware of the capabilities and the limitations of gyros and the design tradeoffs which might affect his application.

Important factors which influence the design and selection of gyroscopes for space vehicle systems include:

(1) Configuration (strapdown or stable platform mounted)

(2) Interface requirements for other vehicle subsystems

(3) Performance (accuracy, drift rate, resolution, dynamics, etc.)

(4) Reliability (MTBF, redundancy, etc.)

(5) Lifetime (shelf life, operating life, testing duration, duty cycle, etc.)

(6) Environment (acceleration, vibration, thermal, magnetic, radiation)

(7) Cost (money, weight, volume, power, time)

(8) Ease of test and checkout

(9) History (experience of gyro and manufacturer, production status, etc.).

The design and selection of the gyro is constrained by the mission requirements as well as trade-offs among the above factors.

This monograph discusses considerations which form the basis for the specification, design and evaluation of gyroscopes for spaceborne sensor applications. The applications are distinguished in this monograph by basic vehicle category: launch vehicles, spacecraft, entry vehicles and sounding rockets. Specifically excluded from discussion are gyroscope effector applications, i.e., control moment gyros. Exotic or unconventional gyroscopes for which operational experience is nonexistent are mentioned only briefly to alert the reader of future trends. General requirements for testing and evaluation are discussed, but details of gyro testing are omitted. Physical design of the gyroscope and the construction details are also outside the scope of this document.

A related document, now in preparation, is titled *Space Vehicle Accelerometer Applications*. These two related documents describe the applications of inertial sensors in today's space vehicles.

2. STATE OF THE ART

Gyro technology and the application of gyros to space vehicle systems have advanced rapidly in the past 15 years. The number of gyros required for most space vehicle applications is usually small compared to the quantity produced for military and other applications. Consequently, most of the gyros used in space vehicles have been adapted from gyros developed for these other applications.

In order to select the proper gyro for a particular space vehicle application, it is essential that the system designer have a basic knowledge of gyro principles. Several textbooks are available covering the theoretical principles of gyroscopes (refs. 1–4). The *Standard Gyro Terminology* (ref. 5) defines the characteristics of gyros in terms of general definitions and of operational performance characteristics.

2.1 Gyroscope Purpose and Functions

Gyroscopes serve two major purposes:

(1) To establish an inertial reference coordinate frame

(2) To measure angular rotation (position, rate) of the space vehicle about the reference axes.

The inertial coordinate frame may be used as a reference for stabilization of the vehicle's attitude or attitude rate, or it may be used to establish a reference for the purpose of onboard navigation. The orientation of a fixed reference frame relative to the current position of each gyro spin axis may be established externally, most frequently in a digital computer, even though the spin axes are intentionally reoriented.

Gyros are operated in two fundamental modes. A free (displacement) gyro measures rotation of the gyro case with respect to space by sensing the output angle(s) between the gyro element and the case. A "captured" gyro is operated so that the output angle between the gyro element and the gyro case is kept near null. This is accomplished either by torquing the gyro element so that it rotates with respect to space or by using a servo followup which causes the structure that supports the gyro case to rotate with respect to space. The inertial angular velocity of the supporting structure is determined by measuring the magnitude of the torque applied to the gyro element and dividing by the spin angular momentum of the gyro. In summary, the information from a displacement gyro comes from an angle measurement, while the information from a captured gyro is the result of a torque measurement.

Gyro applications may be categorized by the frequency spectrum of the angular motion to which the gyro responds. Typical values are shown in table 1.

2.1.1 Guidance and Navigation (Low Frequency)

The principles of inertial navigation are well-covered in references 6–9. Gyros are used to establish the coordinate frame in which inertial accelerations are measured and must be accurate to very low rates. Gyro drifts of the order of 0.015 deg/hr lead to navigation velocity errors of the order of one knot. Gyros have been used to provide an inertial reference for guidance and navigation of numerous launch vehicles, spacecraft and entry vehicles.

2.1.2 Stabilization and Control (Near Vehicle Natural Frequency)

Gyros used in autopilots and for rate damping are required to sense higher angular rates but do not need as high accuracy as the inertial grade gyros, nor do they need to be as sensitive to

TABLE 1.—Gyro Applications

Application	Gyro Types[a]	Frequency Range	Torquing Rate	Drift Rate
Guidance and navigation	2DF SDF-RI	Platform, 0.001 to 1 Hz Strapdown, 0.001 to 10 Hz	Platform, 50 deg/hr or less Strapdown, up to maximum vehicle rate	0.05 deg/hr or better
Stabilization and control	SDF-rate SDF-RI 2DF 2DF-free	0.1 to 10 Hz	Up to maximum vehicle rate	0.1 to 50 deg/hr
Tracking and pointing	SDF-rate 2DF-free	Up to 100 Hz	Up to 4000 deg/sec	0.1 to 10 deg/min
Flight data analysis	All	[b]	[b]	[b]

[a]See Section 2.2.

[b]As required.

very low rates. They have been used for attitude reference on a large number of space vehicles and for attitude stabilization on nearly every actively controlled space vehicle.

2.1.3 Tracking and Pointing (High Frequency)

Tracking and pointing is a special capability required for the stabilization and control of experiment packages or antennas on some space vehicles, particularly spacecraft and sounding rockets. Gyros may be used for this application in two principal ways. The first is rate-aided tracking, which utilizes a gyro to achieve a required rate output level and thus provide smooth motion for tracking. The second use is as a pointing reference or memory. Typical short-duration pointing applications include orienting the space vehicle to a desired attitude reference then back to the gyro "memory" position and temporarily turning the vehicle precisely for velocity corrections. Longer "memory" examples are gyro reference of the Sun or other fixed space line when the vehicle is eclipsed by the earth or other body. The gyros are generally accurate in sensing high-frequency rotation but may be subject to low-frequency drift.

2.1.4 Flight Data Analysis

In addition to the real-time functions discussed above, gyro outputs are also used for analysis of flight data either inflight or postflight. Inflight observation of gyro outputs may be made by an onboard crew via displays or computer readout, as illustrated by the Mercury, Gemini and Apollo spacecraft and the X-15 research vehicle. Inflight data from telemetry is often used by ground crews to verify the trajectory and to issue guidance commands, as is done for many launch

vehicles and for the Apollo, Ranger, Mariner and Surveyor spacecraft. Inflight malfunctioning of a vehicle can also be detected and possibly corrected as noted by the OGO spacecraft experience.

Postflight data analysis of gyro outputs allows verification of proper system functioning, permits reconstruction of vehicle attitude and rates at specific times such as during experiment operation, and provides a means of interpreting vehicle dynamic problems. Data is usually received by telemetry, although in some vehicles, such as the X-15 and the lifting bodies, data may be recorded onboard and returned to earth.

2.2 Types of Gyroscopes

Gyroscopes can be categorized as either single-degree-of-freedom (SDF) or two-degree-of-freedom (2DF). These classes can be further subdivided by the type of spin bearings used to support the gyro rotor. (The spin bearings should not be confused with bearings which support the gyro element.) Spin bearings are primarily of two types: preloaded ball bearings and gas bearings.

2.2.1 Single-Degree-of-Freedom Gyros

In the SDF gyro (fig. 1) the gyro element is free to rotate about only the output axis (OA). The input to the instrument is the angular velocity of the case about the input axis (IA). Various gimbal restraints apply torques to the gyro element to keep its spin axis (SA) closely aligned with the spin reference axis (SRA) of the case. The output produced by the pickoff is proportional to the small angle that the gyro element makes with the case.

2.2.1.1 Rate Gyros (Mechanically Restrained)

The mechanically restrained rate gyro (refs. 10, 11) was first used about 1920 as a basic indicator for instrument flying. It is a simple, rugged, inexpensive unit having relatively low precision. The gyro element is typically supported on ball bearings and depends on a mechanical spring for elastic restraint (fig. 1a). An input angular velocity develops a precession torque on the gyro element which is opposed by the spring. This creates an output angle that is proportional to the angular rate about the IA. The main sources of error are instability of the mechanical spring and output axis friction.

2.2.1.2 Rate-Integrating Gyros

These SDF gyros suspend the gyro element (or float) in a fluid which provides a viscous damping torque whenever the gyro element moves relative to the case (fig. 1b). The flotation suspension

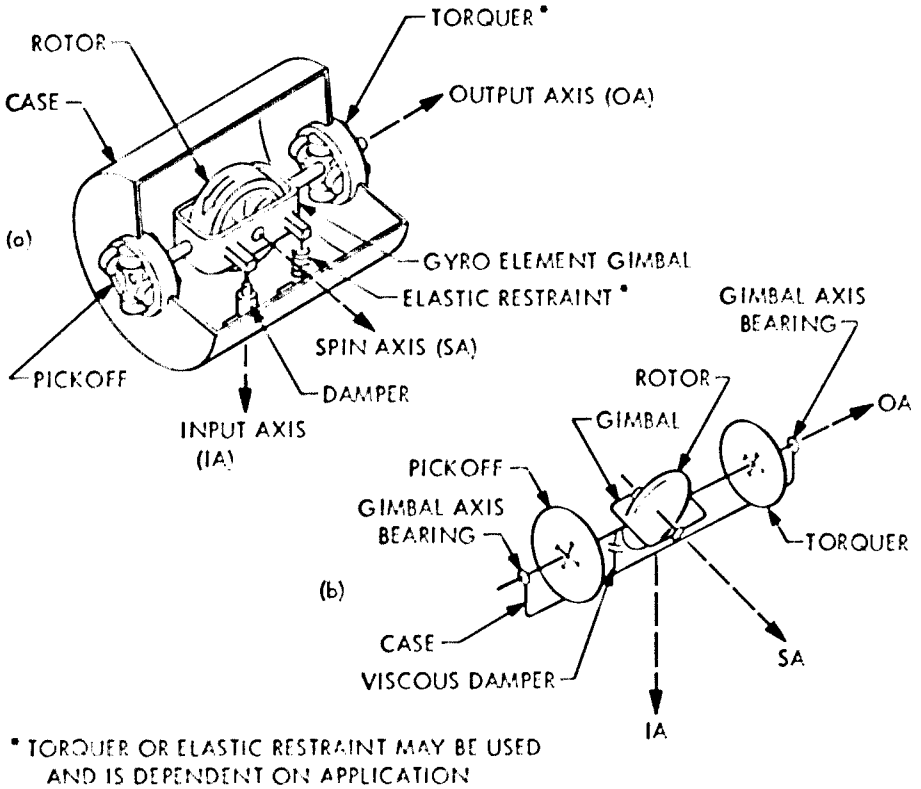

Figure 1.–(a) Essential elements of SDF gyro; (b) line schematic of SDF floated, rate-integrating gyro.

also reduces frictional restraints about the OA. The development of flotation is largely responsible for the orders of magnitude improvement in precision over nonfloated gyroscopes.

A floated gyro uses a fluid whose density closely matches that of the gyro element. However, since the gyro element is perfectly floated at only one temperature, a heating jacket is usually mounted on the gyro case to maintain careful temperature control. In some designs magnetic or electrostatic suspension is used to compensate buoyancy errors and kinematic effects.

The effect of the viscous damping torque is to make the output of the instrument proportional to the integral of the IA angular velocity. The pickoff measures the angular displacement of the float about its OA. A torquer is installed about the OA to command a calibrated rate. The ratio of the output angle to the input angular displacement is called the *gain* of the rate-integrating gyro. It is determined by the ratio of the spin angular momentum of the rotor to the damping coefficient of the flotation fluid.

Low Gain Gyros

Heavily damped gyros using flotation fluids of a few hundred centipoise (10^3 N • s/m^2) provide typical gains in the range from 0.1 to 50. The characteristic time constant of the gyro's response to an input is equal to the effective OA moment of inertia divided by the damping coefficient of the flotation fluid. The effective OA moment of inertia contains a correction for gimbal compliance or fluid pumping. High-viscosity fluids provide high damping restraint, fast response, and low gain. Damping is sometimes increased by applying paddle-damping or eddy current techniques. Typical characteristic time constants for low-gain gyroscopes range between 1 and 100 msec.

High Gain Gyros

For low-viscosity flotation fluids, the gyro gain is typically of the order of 100, and the characteristic time constant is approximately 100 msec. In hydrostatic SDF gyros, the float is supported both radially and axially by a pressurized gas bearing which is self-centering and does not require pivots, magnetic suspension or temperature controls. The gain of such gyros is as high as 10^5, and the characteristic time constant is around 100 sec. Consequently, for angular motions above 0.01 Hz, the very-high-gain gyro output is approximately the second integral of the input angular velocity, thus leading to the terms "double integrating" and "unrestrained" gyros.

2.2.2 Two-Degree-of-Freedom Gyros

The 2DF gyroscope has a support which permits the spin axis to have two degrees of rotational freedom. This is historically the oldest type of gyro.

2.2.2.1 Gimballed Gyros

The gimballed 2DF gyro is supported with a gimbal (the outer gimbal) between the gyro element (the inner gimbal) and the case (fig. 2). Inputs to the 2DF gyro can be applied about both of the two axes perpendicular to the gyro SA. The outputs of the gyro are the two signals proportional to the angle which the gyro element makes with the outer gimbal and the angle which the outer gimbal makes with the case.

The most precise 2DF gyros are operated in the captured mode using a servo followup. The torquers are used to command angular rates about each of the two axes. Angular rates are proportional to the applied torque. One 2DF gimballed gyro thus acts similarly to two SDF rate-integrating gyros with unity gain. A 2DF "free" gyro is operated in the displacement mode with no constraint on the magnitude of the angles which the case can make relative to the SA. A free gyro is used to measure the case orientation relative to the SA directly, without a servo followup.

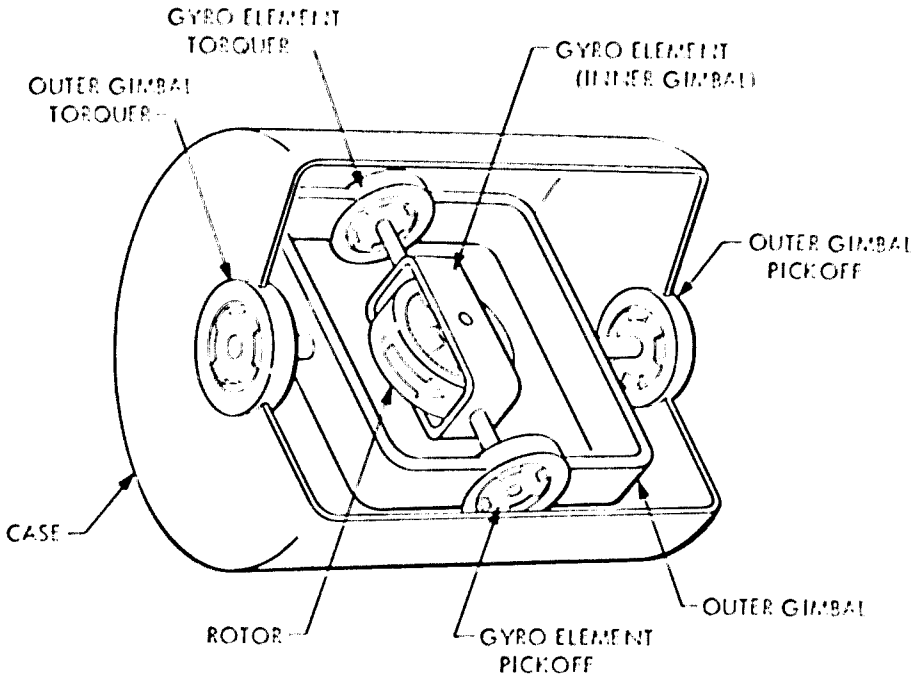

Figure 2.–Essential elements of a 2DF gimballed gyro.

2.2.2.2 Free-Rotor Gyros

A free-rotor gyro is a 2DF gyro without gimbals. Other means such as flotation, gas bearings, electrostatic suspension or magnetic suspension are used to support the rotor (refs. 12–17). Usually, the gyro rotor is nearly spherical and is not mechanically restrained to rotate about a particular axis. All free-rotor gyros must have some means of either preventing or damping nutation (refs. 18, 19). Many gyros of this type are kept running to minimize the number of starts and stops.

2.2.2.3 Tuned Rotor Gyros

This 2DF gyro uses a rotating flexure suspension on one end of the drive shaft to support the rotor (refs. 20–22). This all-mechanical, nonfloated design is extremely simple and provides a support free of rotational friction. The decoupling of the rotor from its drive shaft and support bearings gives the gyro very stable *g*-sensitive drift and inertial quality at relatively low cost. However, the instrument is very sensitive to inputs at the tuned frequency or its harmonics.

2.3 Configurations

Depending upon the application, gyros may be mounted on an inertially stable platform, directly on the space vehicle, or on some member that moves relative to the vehicle such as a telescope or tracker. These configurations often correspond with the gyro functions in Section 2.1 according to the frequency spectrum of the sensed rotational motion.

2.3.1 Stable-Platform-Mounted

Gyros mounted on a stable platform or the stable element of an inertial measuring unit (IMU) are isolated from the angular rates of the space vehicle. The stable element is generally suspended by three or four gimbals to provide three degrees of rotational freedom.

The typical application for this configuration is for an inertial measuring unit (IMU). Accelerometers are also mounted on the stable element and their outputs are integrated for inertial velocity and position information. At least three SDF, two 2DF, or one SDF and one 2DF are required for a complete inertial reference.

The operation of an SDF gyro in a platform system is shown functionally in figure 3. Any error in the platform position rotates the gyro case about the IA; this produces a rotation of the float around the OA and develops an error signal at the pickoff. The gimbal servo loop then nulls this error by rotating the platform (and hence the gyro case) about the gyro IA. As a result, the platform is kept aligned with the desired reference frame. Vehicle attitude information is obtained from the platform gimbal angles.

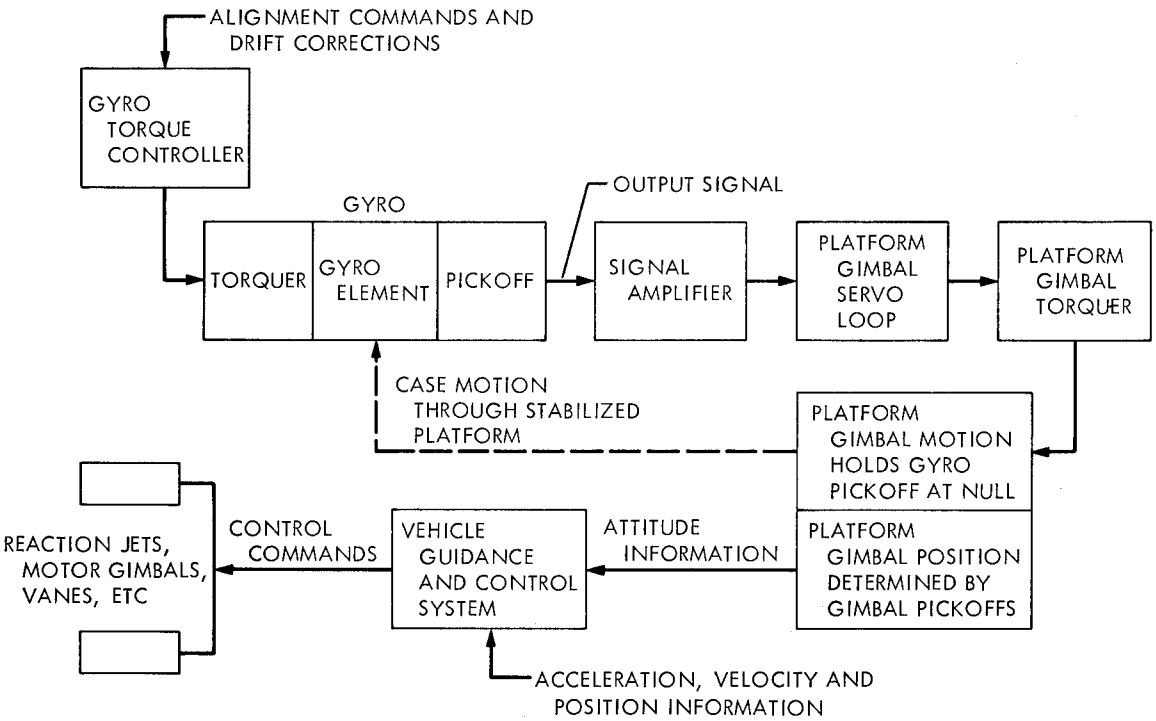

Figure 3.–Function of gyro in platform configuration.

2.3.2 Vehicle-Mounted (Strapdown)

In a strapdown configuration the gyros are mounted directly on the vehicle. Gyros operating in the displacement mode give direct angular measures of the vehicle rotation. Alternatively, the gyros may be operated in the captured mode, in which case they are torqued at the rates required to keep up with the vehicle motion. The torquing rates thus provide direct measures of the vehicle rates. In a strapdown inertial reference system, the coordinate frame is stored in a computer, most often by using the torquing signals to update the direction cosine matrix. Strapdown systems are particularly well suited to many space vehicle applications because space vehicles do not have the high angular rates associated with airborne vehicles (refs. 23–29). However, strapdown systems place a greater computational requirement on the computer than gimballed systems.

The operation of a captured gyro in a strapdown system is shown functionally in figure 4. The gyro SA is kept aligned with its case by torquing the gyro. The torque commands are used to update the direction cosine matrix which defines the orientation of the vehicle relative to the reference coordinate system.

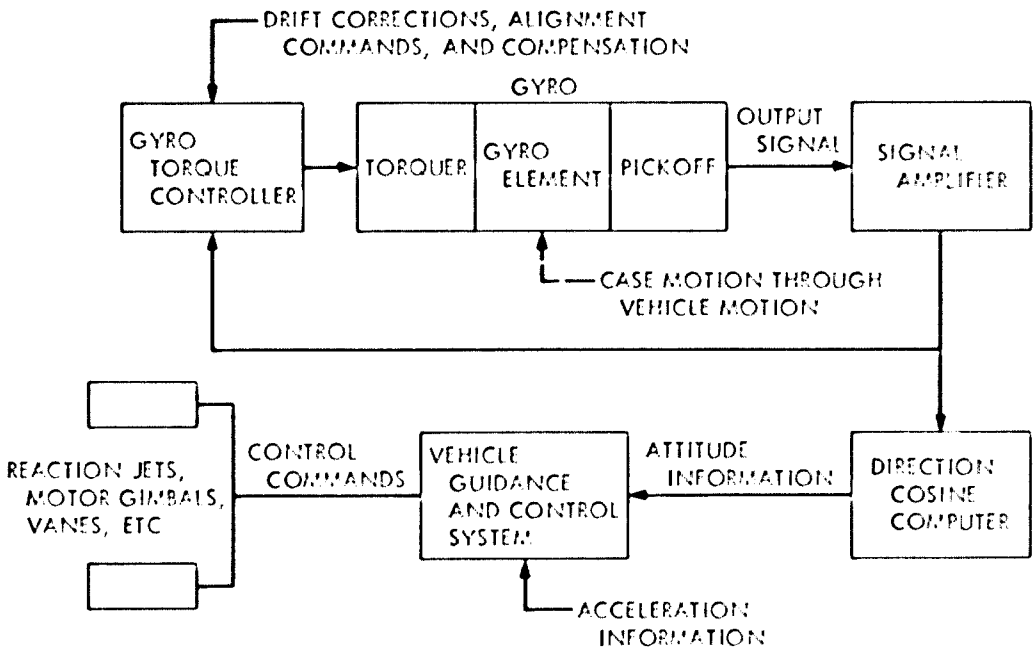

Figure 4.–Function of gyro in strapdown configuration.

2.3.3 Hybrid Systems

An example of a hybrid system is one in which the gyroscopes are mounted on some member which moves relative to the vehicle, for example, a star tracker. The line-of-sight to the star

establishes the reference direction, but the gyroscope stabilizes tracking of the star by acting as a mechanical filter to eliminate high-frequency noise in the tracker.

Another example of a hybrid system is one which uses one or more single-axis stable platforms to isolate the gyros from vehicle rotation. Each platform is stabilized with respect to space about only one axis by mounting the gyro input axis parallel to this axis and minimizing gyro input rates by means of a servo followup. The motion of the single-axis platform relative to the vehicle provides information on vehicle rotation about that axis. The accuracy in readout is shifted from calibrated torquer signals (in the case of strapdown gyros) to an encoder which reads the platform relative rotation. The negligible rate about the IA eliminates many dynamic errors present in classical strapdown gyros.

In cases where most of the vehicle rotation is about one axis, such as a spin-stabilized sounding rocket, a single-axis roll-stabilized platform can isolate three SDF gyros from the spinning launch environment to provide a stable base for the strapdown pitch and yaw gyros. A computer programmed to interface with the hybrid platform can provide either quaternion or direction cosine error signals to affect an attitude reference unit.

2.4 Modes of Application

Gyroscopes have been used in space vehicles in a number of different application modes, several of which are discussed below.

2.4.1 Attitude Rate Control Using an SDF Rate Gyro

The functional operation of a spring-restrained rate gyro used in an attitude rate autopilot is shown in figure 5. Turning rates about the gyro IA develop precessional torques which are opposed (balanced) by the spring restraint. The torque developed by the spring is proportional

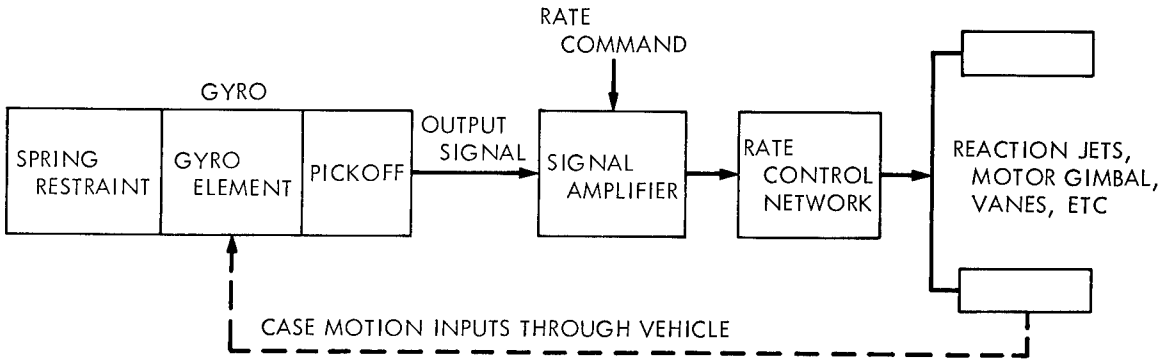

Figure 5.–Attitude rate control with an SDF rate gyro.

to the output angle deflection and the spring rate of restraint. Thus the pickoff output is proportional to the input rate. The control system can maintain the commanded input rate by controlling the output signal of the rate gyro. To provide vehicle rate damping about the gyro IA, the control system attempts to keep the pickoff at null.

2.4.2 Attitude Rate Control Using SDF Rate-Integrating Gyros With Signal Feedback

Rate-integrating gyros can be operated in a rate mode by the addition of external feedback circuitry. This technique can be used with any rate-integrating gyro and provides the most accurate type of inertial rate measurement. As shown in figure 6, the output signal of the gyro is fed back to the torquer with the proper phase so that the output angle is kept near null. When the gyro is pulse-torqued, the angular rate is proportional to the pulse rate and the number of pulses is proportional to the angular displacement (rate integral) about the IA.

Some spacecraft attitude control systems have utilized rate integrating gyros in a rate mode in order to eliminate the requirement for heater power (ref. 30). By using the gyro in a rate mode, the changing gyro gain due to temperature variation only affects the dynamics of the feedback loop instead of the calibration of angle measurement.

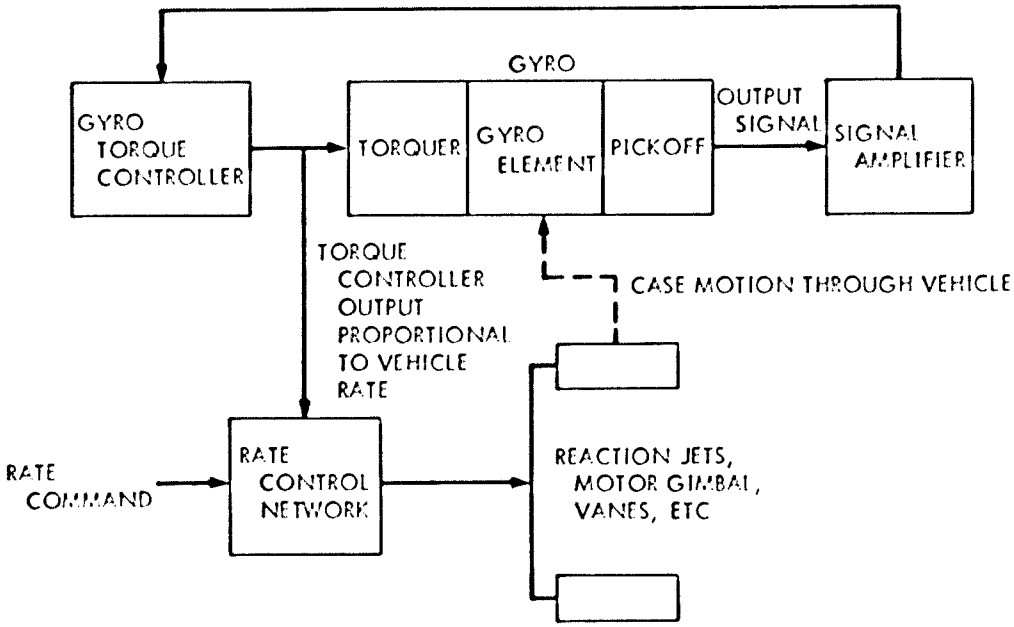

Figure 6.–Attitude rate control with an SDF rate-integrating gyro.

2.4.3 Attitude Stabilization With SDF Rate-Integrating Gyros

The functional operation of an SDF rate-integrating gyro used in an attitude stabilization mode is shown in figure 7. The gyro is mounted directly on the vehicle, and the gyro output is nulled by rotating the vehicle. An attitude rate will continue as long as a command is applied to the torquer. With no input command, the vehicle maintains the orientation established by the gyro SA.

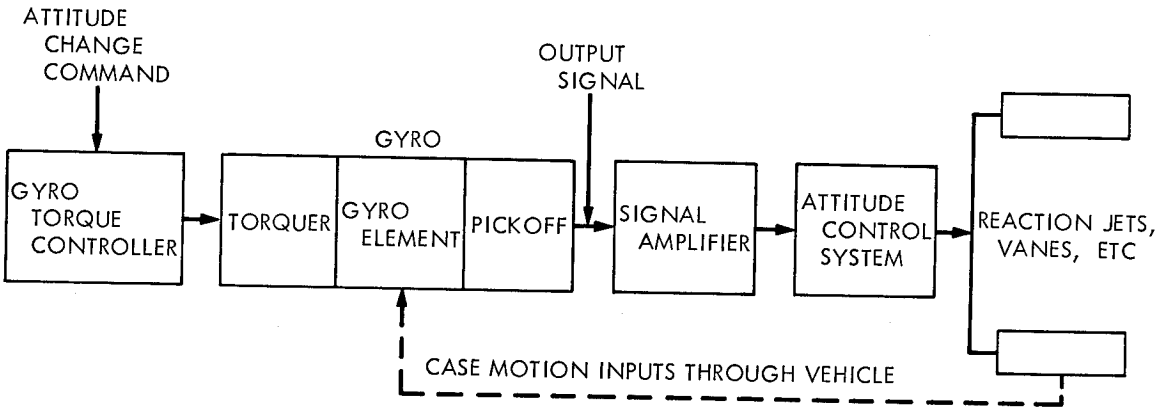

Figure 7.–Attitude stabilization with an SDF rate-integrating gyro.

2.4.4 Attitude Stabilization With 2DF Gyro

The operation of a 2DF attitude gyro is similar for each axis to the SDF attitude gyro shown in figure 7. The gyro is mounted directly on the vehicle, and the attitude is measured directly from the gimbal angles. Vehicle motion around the inner and outer gimbal axes can be measured by the two pickoffs; drift corrections and commanded rates can be applied to the two torquers. This configuration can control two axes with one gyro unit, but it requires two units for three-axis stabilization (with one redundant axis). A 2DF gyro cannot easily provide rate control, thus requiring additional SDF rate gyros.

2.5 Tradeoff Factors

The selection of a particular gyro for a specific application involves a tradeoff study of the performance, reliability and cost of each available instrument.

2.5.1 Performance

The performance of the highest-quality gyros has been improved over four orders of magnitude in two decades, even though the fundamental principle still involves a spinning wheel. The primary concern of gyro designers has been the elimination of torque uncertainty, which is the direct cause of gyro drift. Consequently, gyros are tested extensively to determine their performance characteristics, particularly drift stability, and to permit compensation for unbalances and disturbance torques. Important performance characteristics are discussed below.

2.5.1.1 Precision

Precision is a measure of the gyro's ability to provide the same output each time the input conditions are exactly repeated. For most applications it is more important that the gyro be *precise* (i.e., that the measurements are repeatable) than that the gyro be *accurate* (i.e., that the gyro output indicate the true value of the desired measurement independent of disturbing inputs). The precision of a gyro is limited by the variation of its sensitivity to known disturbing inputs and by the random error, which cannot be predicted. The extensive testing required tends to associate high cost with high precision.

2.5.1.2 Dynamic Range

The dynamic range of a gyro is the ratio of the input range to the threshold (ref. 5). For an angle-measuring instrument it is determined by the largest and the smallest angular displacements which can be usefully detected. For rate-measuring gyros the dynamic range is the ratio of the maximum measurable rate to the lowest detectable rate. The dynamic range provides an indication of the error uncertainty as a fraction of the full-scale input. The dynamic range is limited by the type and cost of the gyro, so that the threshold sensitivity is traded against the maximum rate or angle for a given type of gyro. Typical values of the dynamic range for various gyro types are indicated in table 2.

TABLE 2.—Typical Dynamic Range of Gyros

Open-loop, spring-restrained gyro	8000:1
Ball-bearing suspension, open-loop gyro	20,000:1
Dry, servoed gyro; ball-bearing gimbal mounts with feedback through torquer	40,000:1
Floated gyro; non-temperature-controlled	100,000:1
Fully floated, temperature-controlled, pulse-captured strapdown gyro	10,000,000:1

2.5.1.3 Drift Rate Uncertainty

The drift rate uncertainty is the error in the gyro output due to all those effects which are either unknown or reduced to an acceptable minimum level (e.g., flex lead spring restraint). Uncertainties in the gyro output are compared with other contributors to provide a total error budget and are traded against cost.

2.5.1.4 Stability

Stability is one of the most important considerations for gyro applications. The stability of the gyro depends strongly on the nature of its disturbances. Some of the largest changes in the gyro performance occur from turnon to turnon. Thus there is some advantage to continuous operation of the gyro in the interest of stability. It also appears that there are optimum methods of storing gyros to insure the maximum stability. Although little data is available on this subject, the periodic turning of some gyros in storage is generally believed to improve stability. Storage at elevated temperatures as close to operating temperatures as possible apparently improves stability in some gyros. The subject of storage conditions vs improved stability is controversial since results appear to be random and do not always yield an improvement.

2.5.1.5 Scale Factor

Gyro scale factor is the constant of proportionality between the mechanical input to the gyro and the magnitude of the output of the pickoff. Any error in the value of this number normally results in a proportional uncertainty in attitude or attitude rate measurement. Although the scale factor is extremely sensitive to absolute temperature changes as well as temperature gradients, this behavior can be accurately calibrated.

Gyro scale factor should not be confused with command rate scale factor (CRSF) associated with closed loop operation of a gyroscope. Gyro scale factor is associated with the electrical output of the pickoff; CRSF is associated with the device (torquer) utilized to restrain the float to null in a closed loop operation. CRSF has units of rate per unit electrical input, e.g., deg/hr/mA. CRSF is an important characteristic of the gyro since any change, independent of scale factor, will have an effect on the overall control loop. For this reason, significant attention must be given to CRSF in both analog and digital closed loop operation.

2.5.1.6 Linearity

Ideally, the output of the gyro will be directly proportional to the mechanical input for any value between the minimum and maximum design inputs. However, this is not always the case since a number of factors affect this relationship. For example, gyro nonlinearities can arise from pickoff nonlinearities, torquer nonlinearities, temperature gradients and acceleration effects. These factors are evaluated and controlled or compensated in any given design.

2.5.1.7 Output Noise

The high-frequency component of the gyro output error is termed noise. The major source is the spin bearings. The use of gas bearings instead of ball bearings for the rotor support significantly alleviates the problem, providing low output noise at high frequency. Output noise

becomes a significant consideration in pulse rebalance closed loop operation since spurious pulses may result in an accumulating bias error due to unequal plus and minus pulse scale factors and short sampling periods.

2.5.1.8 Temperature

Temperature control is extremely important for precision in floated gyro instruments (refs. 31–33). Most of the gyro parameters are temperature- or temperature-gradient-sensitive. An unwanted temperature gradient across a floated gyro may introduce an acceleration-sensitive torque on the gyro which leads to output error. Where required for adequate performance, the gyro temperature is controlled by heaters. Since heat can only be added, the gyro set point is necessarily above the system ambient temperature. Typical specifications of temperature control for gyros floated with fluorolube limit excursions to less than 0.1°C. Newer silicone fluids are being used with 1-2°C temperature excursions, which may allow the gyros to be operated without controlled heaters. Non-floated gyros are less temperature sensitive and exhibit drift rate uncertainties as low as 0.05 deg/hr over a 30°C temperature range.

2.5.1.9 Anisoelasticity

When the gyro support compliance is not identical in all directions, the gyro does not yield in the same direction as the applied acceleration. This creates a moment arm proportional to the acceleration, which results in a torque proportional to the square of the acceleration (g^2). This sensitivity to g^2 is important for applications in high acceleration or vibration fields (ref. 34). The g^2 error due to vibration grows with time because the error has the same sign during both halves of a vibration cycle.

2.5.1.10 Anisoinertia

When the gyro element has unequal principal moments of inertia, there is an apparent torque about one principal axis due to simultaneous angular velocities about the other two. This gives rise to an error that is proportional to the product of angular velocity components. It is only serious when the gyro is subject to high angular rates, primarily in strapdown applications (ref. 35).

2.5.1.11 Coning

Coning is a physical phenomenon associated with the use of SDF gyros. When the axis of a body moves in a cone about the same average orientation, the average angular velocity about the coning is nonzero. An SDF gyro with IA placed along a coning axis correctly senses the average angular velocity, which the system may falsely integrate into an average rotation. This problem is not an erroneous output from the gyro but is that the cross axis gyro servo loop does not have

sufficient bandwidth. Coning problems are usually minimized by tight servo loops on platform systems and by high bandwidth computation and fine quantization with strapdown systems (refs. 4, 36).

2.5.1.12 Error Models

Major gyro error contributors are error torques, scale factor errors, linear acceleration sensitivities, misalignments, and sensitivities to temperature and power variations. A number of sophisticated error models have been developed to apportion the effects of these disturbances both singly and in combination (refs. 11, 37, 38). The models are used to predict errors expected and to assign values to the error coefficients of the gyro for error correction in flight. They are verified for the selected gyro operating in any particular system application; ensemble compensation is often used if the gyros come from a family having well-known (repeatable) errors.

There have also been a number of attempts at the statistical modelling of gyro errors (e.g., ref. 39). While this approach may be useful for application to optimal filtering, the majority of gyro errors are caused by physical phenomena and are therefore of a deterministic rather than random nature. The practical tradeoff comes in the amount of measurement and computation for gyro error correction which must be performed in order to meet the error budget.

2.5.2 Reliability

Reliability is the probability that a gyro will meet the specified performance requirements under the specified environmental conditions throughout a specified operating or storage life (ref. 5). Reliability is one of the most important factors considered in the choice of a gyroscope for space vehicle applications, but the decision is a difficult trade-off between older technology for which reliability information is available and newer technology that offers potential advantages. Reliability predictions made without past history are themselves unreliable. Furthermore, the reliability of the instrument usually becomes associated with that of the manufacturer as regards meeting of delivery schedules, quality control, cost overruns, etc.

From the reliability standpoint, the best gyro is one which is in production in large quantities and which has an established history of data on its performance and its failure modes. It should also have been through service changes to correct any problems brought out by the failure data. Several important reliability considerations are discussed below.

2.5.2.1 Mean Time Between Failure

The mean time between failures (MTBF) is the most widely accepted measure of reliability, but care must be taken to qualify the conditions under which the MTBF is established. It is also important to specify which failures are included. A failure is generally defined as any out-of-

specification condition which renders the gyroscope unacceptable for its intended application. If a sufficiently large sample of gyros is available, the MTBF can be estimated by dividing the total number of operating hours by the total number of failures. For a small number of failures a lower confidence limit for an MTBF can also be computed.

2.5.2.2 Life

The life of a gyro is a function of how the gyro is used. The major element in determining the gyro life is the spin motor bearing. The typical failure mode for a gas bearing is that the friction in the bearing becomes too large for the starting torque of the spin motor to overcome, and the wheel fails to start. Consequently, there is a tendency to keep the gas-bearing wheel spinning continuously. In ball-bearing gyros, the most common failure modes are excessively noisy bearings and motors which will not run synchronously.

The common life characteristic for a production run of gyros is typically described by the "bathtub curve" shown in figure 8 (ref. 40). During the debugging period the failure rate is high because of the failure of marginal parts and infant mortality. These faults are detected and corrected during burn-in operation, causing the failure rate to decrease. During the normal operating life of the gyros, the probability of a failure during a given time interval is essentially independent of the age of the gyro. In the final period, parts begin to wear out from usage and the failure rate increases with time. The plot is intended to be a smoothed curve which requires considerable failure rate data. The objective of the system manager is to estimate the time of the break points and minimize the risk by having the mission occur during the flat portion of the curve.

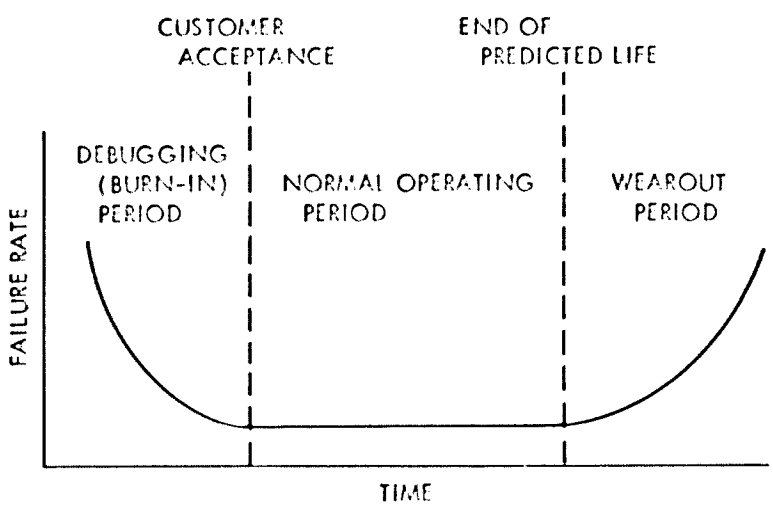

Figure 8.–Common gyro life characteristic curve.

2.5.2.3 Environment

The operating conditions may have an important influence on the gyro reliability. The following observations are typical:

(1) Excessive acceleration, shock or vibration will reduce gyro life.

(2) High temperatures or high-temperature gradients across the gyro can be deleterious to performance and mechanical integrity.

(3) Magnetic shielding is frequently required to protect the gyro from external fields, or occasionally to contain the field produced by the gyro itself.

(4) Radiation hardening is needed for some applications. Difficulties are often encountered in verifying the radiation tolerance since radiation requirements are not presently well-established.

(5) Human blunders occasionally cause gyro damage; e.g., spinning a gas-bearing gyro backwards can ruin the bearing. A phase-order detection circuit improves reliability by protecting against such a possibility.

2.5.2.4 Redundancy

To provide increased reliability, redundant instruments or redundant systems are often used. With double redundancy a major problem is the inability to detect the faulty unit without additional information. Consequently, triple redundancy is frequently used with majority voting logic for isolating the failed unit. Although three SDF gyros are needed to detect angular velocity about three orthogonal directions, redundant gyros for these three may be shared geometrically by properly orienting the gyro input axes. Four gyros provide one spare; five gyros allow voting to isolate one failed unit; six gyros allow voting to isolate two failures, etc.

However, the use of redundancy does have its drawbacks. For example, if a redundant gyro is nonoperative for prolonged periods of time, startup problems may be encountered. On the other hand, a power drain is imposed to operate a redundant gyro continuously. If the redundant unit is "exercised" periodically, switching mechanisms are required and intermittent power inputs must be provided for. The system weight is increased by redundancy and, if more than one gyro is used, a decision is required as to whether to carry a redundant gyro for each operational unit, thereby increasing weight substantially, or to use one redundant unit as a replacement for any of the several operational units, thereby demanding more complex switchover equipment.

The reliability improvement provided by various redundant inertial sensor configurations has been the subject of several investigations (refs. 41–45). The results of these studies are summarized in figure 9, from reference 45. Clearly the optimum skew configuration of six gyros is attractive for its improvement in reliability. However, other practical tradeoffs must be considered such as simplifying gyro output processing, obtaining compact packaging for thermal control of the gyros and economical use of spacecraft volume, achieving reasonable fabrication and test procedures,

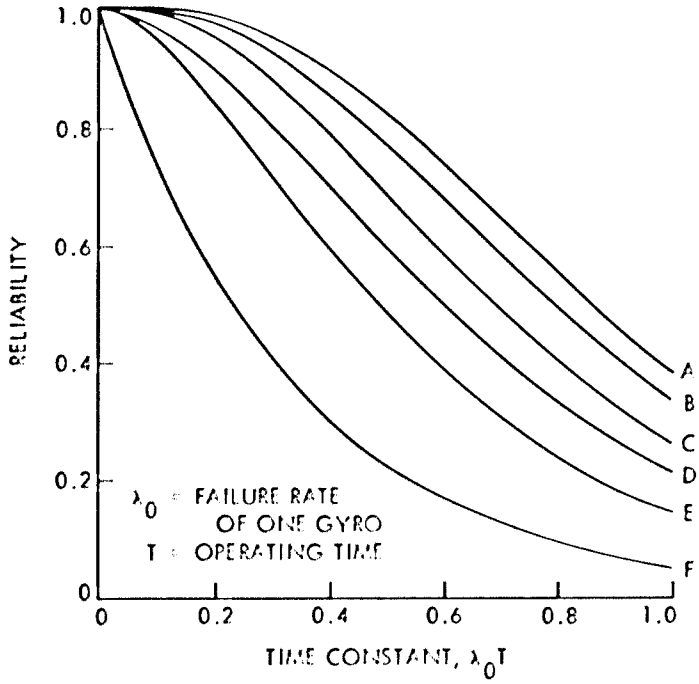

A OPTIMUM (SKEW) CONFIGURATION OF SIX GYROS
B OCTAHEDRON (SKEW) CONFIGURATION OF SIX GYROS
C SKEW CONFIGURATION OF FIVE GYROS
D ORTHOGONAL EMPLACEMENT OF TWO GYROS ON EACH AXIS
E SKEW CONFIGURATION OF FOUR GYROS
F NONREDUNDANT IRU

Figure 9.–Reliability functions of six redundant configurations (ref. 45).

and reducing cost. The selection of the geometric configuration must consider the number of sensors which will be operated simultaneously, the switching mechanism for adding sensors, and the voting logic for detecting a failed sensor.

2.5.2.5 Design Risk

The use of any new or unproven design will involve a certain risk. Previous experience has shown the wisdom of using proven, existing design concepts rather than relying upon new concepts which look promising but which require substantial development.

2.5.3 Cost

The cost of constructing a gyro and maintaining the necessary quality control is typically about 40 percent of the total initial cost to the purchaser. The remainder is the cost of burn-in, testing,

and documentation. As a result, the price for the same unit may vary widely depending upon the testing and documentation specifications. In general, better performance is more expensive, but the exact cost for a given performance is a function of the level of testing or proof of performance. Subject to this reservation, the cheapest, dry, spring-restrained rate gyros with an accuracy of 1 part in 100 can be purchased for a few hundred dollars. Better dry gyros using feedback through the torquer and with drift rates around 10 deg/hr cost a few thousand dollars. An inertial grade floated gyro with a drift rate near 0.01 deg/hr will cost above $10 000. The highest-performance gyros typically cost above $25 000 each.

Figure 10 quantitatively illustrates the tradeoff between cost and gyro performance. Using short-term random drift as the measure of performance, data from seven different gyros was obtained under the following assumptions:

(1) Existing design purchased from existing manufacturing runs without modification

(2) Moderate documentation consistent with unmanned spacecraft; final functional test data only; formal acceptance test costs not included

(3) Small buy (6 to 10 gyros)

(4) Short-term fixed drift instability (10 to 30 min).

All data points fell within the indicated band, which is approximately a straight line in log-log coordinates. The cost roughly doubles for an order-of-magnitude improvement in performance.

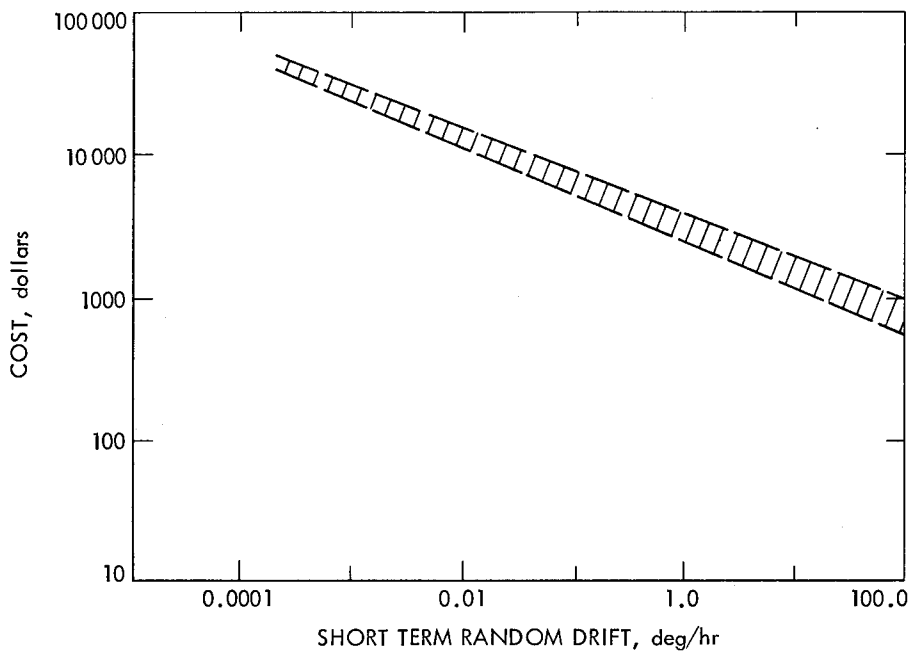

Figure 10.–Typical gyro cost vs short-term random drift.

A large portion of the purchase price of a gyro is usually devoted to testing to insure the gyro will meet mission requirements by detecting and removing faulty units before usage and to establish a data base for predicting mission performance. This will have an impact on total cost beyond the unit cost of the component. The possibility of gyros failing the acceptance test encourages the manufacturer to produce a more reliable instrument in order to achieve a sufficient yield rate. The resulting increased life and reliability permits the customer to amortize his cost over more use-hours and with less maintenance, thus lowering his cost per use-hour. On the other hand, the time a gyro spends in test must ultimately represent some fraction of its total useful life. Consequently, there is some optimum level of testing that will minimize the cost per use-hour of the gyro. Documentation of the testing conditions and results is essential to any program. However, special testing and documentation can escalate the cost of an existing gyro far beyond the basic hardware costs.

Quality control also requires considerable judgment in order to achieve lower total cost. Excessive inspection effort wastes money, but too little may allow a defective part to remain undetected until a later and more expensive stage. Any change introduces new risk until it has been tried and proven through test and field use. Even changes in assembly personnel have been reflected in changes in production yields. Constant surveillance is required since problems have a way of recurring, as a result of complacency in a successful program. A specific problem, peculiar to gyros, is contamination of flotation fluids and bearing components.

2.6 Applications

The U.S. space vehicle missions on which gyroscopes have already been (or will soon be) applied are summarized in table 3. The applications have been classified under launch vehicles, spacecraft, entry vehicles, and sounding rockets, since each category places its own characteristic requirements on the gyro. More specific discussions of selected applications are presented below for each type of space vehicle.

2.6.1 Launch Vehicles

This category includes all launch vehicles and boosters which operate within or above the atmosphere at high thrust levels. The operating lifetime is usually short, and the environment generally includes high acceleration, vibration, and acoustic noise.

2.6.1.1 Centaur

The Centaur launch vehicle has an inertial guidance system to perform the following functions:

(1) Atlas (first stage) steering augmentation

(2) Centaur guidance and vehicle steering

(3) Engine start and cutoff signals

(4) Reorientation after spacecraft separation

(5) Attitude stabilization during retro-maneuver

(6) Guidance telemetry signal conditioning.

TABLE 3.—Mission Chart of Space Vehicle Gyroscope Applications

Category	Mission (vehicle)	Sponsoring Agency/Gyro User	Function	Configuration (number)	Gyro Identification	Gyro Type[a]
Launch vehicles and boosters	Agena B	USAF/Lockheed	Guidance, Flight control	Strapdown (3)	Honeywell GG76	SDF-RI
			Guidance, Flight control	Strapdown (3)	2 Honeywell GG76 1 Honeywell GG87	SDF-RI
	Agena	USAF/Lockheed	Guidance, Flight control	Strapdown (3)	Kearfott 2564	SDF-RI
			Navigation, Guidance, Flight control	Strapdown (3)	Honeywell GG-334	SDF-RI
	Atlas (SLV-3A)	LeRC/Convair	Flight control, Stabilization	Strapdown (3) Strapdown (3)	Honeywell GG87 Nortronics GRH4T	SDF-RI SDF-rate
	Burner 2	USAF/Boeing	Guidance	Strapdown (3)	Honeywell GG-49	SDF-RI
	Centaur	LeRC/Convair	Guidance, Attitude reference	Platform (3)	Honeywell GG-49	SDF-RI
	Delta	NASA/Douglas	Guidance	Strapdown (3)	Hamilton Std. RI-1139E	SDF-RI
	Saturn IB	MSFC/Chrysler	Guidance, Stabilization	Platform (3) Strapdown (9)	Bendix AB-5-K4 Nortronics GRH4T	SDF-DRI SDF-rate
	Saturn V	MSFC/Boeing	Stabilization, Guidance, Navigation	Strapdown (9) Platform (3)	Nortronics GRH4T Bendix AB-5-K8	SDF-rate SDF-DRI
	Scout	LaRC/LTV	Guidance, Stabilization	Strapdown (3) Strapdown (3)	Honeywell GG87	SDF-RI SDF-rate
	Titan IIIB	USAF/Martin	Guidance	Strapdown (3) (wide angle)	Kearfott 2536	SDF-RI
			Stabilization	Strapdown (5) (rate)	Kearfott 2536	SDF-RI
	Titan IIIC	USAF/Martin	Guidance Stabilization	Platform (3) Strapdown (5) (rate)	Delco 651G Kearfott 2536	SDF-RI SDF-RI

[a]RI = rate-integrating; DRI = double rate-integrating.

TABLE 3.—(continued)

Category	Mission (vehicle)	Sponsoring Agency/Gyro User	Function	Configuration (number)	Gyro Identification	Gyro Type
Spacecraft	Apollo CM	MSC/NAR	Navigation, Stabilization	Platform (3)	AC 25IRIG	SDF-RI
			Stabilization, Display	Strapdown (3) (wide angle or rate)	Honeywell GG248	SDF-RI
			Stabilization, Display	Strapdown (3) (rate)	Honeywell GG248	SDF-RI
			Stabilization	Strapdown (3)	Kearfott 2021	SDF-rate
	Apollo LM	MSC/Grumman	Navigation, Stabilization	Platform (3)	AC 25IRIG	SDF-RI
		MSC/TRW	Navigation, Stabilization	Strapdown (3)	Hamilton Std. RI-1139	SDF-RI
	ATM	MSFC	Pointing, Stabilization	Strapdown (3)	Kearfott 2519	SDF-RI
	Biosatellite	ARC/G.E.	Attitude reference, Stabilization	Strapdown	Honeywell JRT45	SDF-rate
	ERTS	GSFC/G.E.	Stabilization, Attitude reference,	Strapdown (1)	Kearfott 2564	SDF-RI
			Initial stabilization	Strapdown (1)	Nortronics GRH4	SDF-rate
	Explorer 31	GSFC/	Stabilization	Strapdown	Honeywell JRT45	SDF-rate
	Gemini	MSC/McDonnell	Stabilization Navigation	Strapdown (6) Platform (3)	Honeywell MS-133 Honeywell GG-8001	SDF-rate SDF-RI
	Lunar Orbiter	LaRC/Boeing	Attitude reference, Stabilization, Pointing	Strapdown (3)	Sperry SYG-1000 Kearfott 2564	SDF-RI SDF-RI
	Mariner	JPL	Stabilization, Attitude reference, Pointing	Strapdown (3)	Kearfott 2565	SDF-RI
	Mercury	MSC/McDonnell	Stabilization,	Strapdown (3)	Honeywell GG-79A	SDF-rate
			Attitude reference	Strapdown (2)	Honeywell GG-53	2DF-free
			Attitude, Rate display	Strapdown (3)	Honeywell MS-100	SDF-rate
	Nimbus	GSFC/G.E.	Stabilization, Attitude reference,	Strapdown (1)	Kearfott 2564	SDF-RI
			Initial stabilization	Strapdown (1)	Nortronics GRH4	SDF-rate
	OAO	GSFC/Grumman	Stabilization	Strapdown (3)	Honeywell JRT45	SDF-rate
			Attitude reference	Strapdown (3) Strapdown (3)	MIT 2FBG Kearfott 2564	SDF-RI SDF-RI
	OGO	GSFC/TRW	Stabilization	Strapdown (1)	Honeywell MS 130B1	SDF-rate

TABLE 3.—(continued)

Category	Mission (vehicle)	Sponsoring Agency/Gyro User	Function	Configuration (number)	Gyro Identification	Gyro Type[a]
Spacecraft						
	OGO	GSFC/TRW	Pointing	Strapdown (2)	Honeywell GG49	SDF-RI
	OSO	GSFC/Ball Bros.	Stabilization	Strapdown (1)	Bendix 25IRIG	SDF-RI
	OSO-3	GSFC/Hughes	Pointing	Strapdown (1)	Northrop GI-K7G	SDF-RI
	Ranger	JPL	Stabilization, Attitude reference, Pointing	Strapdown (3)	Honeywell GG49	SDF-RI
	Skylab workshop	MSFC/Douglas	Pointing, Stabilization	Strapdown (9)	Kearfott 2519	SDF-RI
	Surveyor	JPL/Hughes	Attitude reference, Stabilization	Strapdown (3)	Kearfott 2514	SDF-RI
	Viking Lander	LaRC/Martin	Inertial reference	Strapdown (4)	Hamilton Std. RI-1139S	SDF-RI
	Viking Orbiter	LaRC/JPL	Attitude reference, Stabilization, Pointing	Strapdown (6)	Kearfott 2565	SDF-RI
Entry vehicles	ASSET	USAF/ McDonnell	Stabilization, Flight termination, Guidance	Strapdown (3) Strapdown (1) Strapdown (3)	Honeywell Giannini 151D Honeywell	SDF-rate 2DF-free SDF-RI
	DynaSoar	USAF/Boeing	Guidance, Backup guidance	Platform (3) Strapdown (2)	Honeywell 8001 Bendix 19008	SDF-RI 2DF-free
	HL-10	FRC/Northrop	Stabilization	Strapdown	U.S. Time	SDF-rate
	M2-F2	FRC/Northrop	Stabilization	Strapdown	U.S. Time	SDF-rate
	M2-F3	FRC/Martin	Stabilization	Strapdown (9)	Nortronics GRH4T	SDF-rate
	PRIME	USAF/Martin	Guidance	Strapdown (3)	Honeywell GG87	SDF-RI
	X-15	FRC/No. American	Navigation, Stabilization	Platform (3) Strapdown (3)	Honeywell 8001 Nortronics GRH4T	SDF-RI SDF-rate
	X24A/ SV-5P	USAF-FRC/ Martin	Stabilization	Strapdown (9)	Nortronics GRH4T	SDF-rate

TABLE 3.—(continued)

Category	Mission (vehicle)	Sponsoring Agency/Gyro User	Function	Configuration (number)	Gyro Identification	Gyro Type
Sounding rockets	Aerobee 150/170/350	GSFC/Ball Bros. (Strap III)	Pointing, Stabilization Fine pointing	Platform (2) Strapdown (3) Strapdown (2)	Conrac 34646H-04 VARO 1005435-01 Honeywell GG 87	2DF-free SDF-rate SDF-RI
	Aerobee	AFCRL/NRL/Space General (Mark II)	Pointing, Stabilization	Platform (2) Strapdown (3)	Whittaker FM10G-2 U.S. Time Model 40	2DF-free SDF-rate
	Aerobee 150/170	Space General (Mark III)	Pointing	Strapdown (1) Strapdown (3)	Whittaker FM10G-2 U.S.Time Model 40	2DF-free SDF-rate
	Aerobee 150/170	Kitt Peak/Ball Bros (SPCS-1)	Pointing	Platform (3)	VARO	SDF-rate
	Aerobee 150/170 Nike-Tomahawk	Ball Bros. (SPCS-2)	Pointing, Stabilization	Strapdown (1)	Condor Pacific RS-93AA-1	SDF-rate
	Nike-Tomahawk Black Brandt III	GSFC/Space Vector Corp. (SPT)	Pointing	Platform (2)	Space Vector MARS I	2DF-free

Inertial reference is provided by a four-gimbal inertial platform, which is stabilized with three SDF rate-integrating gyros. Some factors that entered in the tradeoff studies between SDF and 2DF gyros are presented in reference 46. A detailed description of the design and development of the Centaur inertial guidance system, including a number of problems and deficiencies associated with the gyros and corrective actions, is also contained in reference 46.

2.6.1.2 Scout

The Scout launch vehicle is equipped with a strapdown guidance system which provides the following major functions (fig. 11):

(1) Accurately times the initiation of guidance, ignition, and other events

(2) Generates suitable signals for programmed pitch and yaw commands

(3) Measures attitude error between reference and programmed attitudes

(4) Provides a properly conditioned set of commands to the vehicle control system.

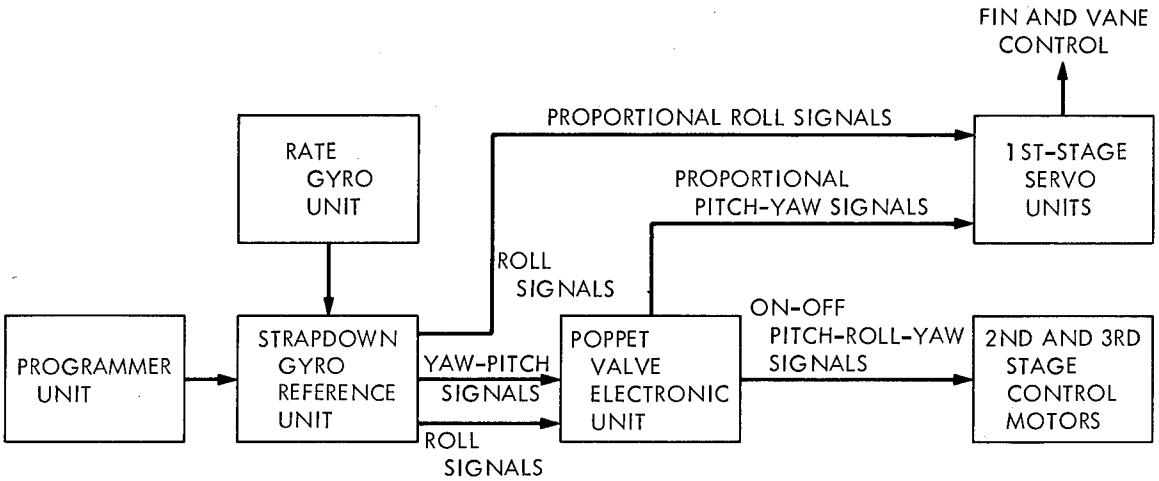

Figure 11.–Block diagram of the Scout guidance and control system.

The strapdown gyro reference unit contains three SDF rate-integrating gyros to measure the relative rotational displacement of the vehicle with respect to an initial set of reference coordinates. The displacement error signals for the pitch, roll, and yaw axes are summed with corresponding rate signals, which are generated by the external rate gyro unit for stabilization of the vehicle about each axis. The pitch and yaw displacement gyros are torqued by externally generated guidance commands to cause specified changes in gimbal alignments and consequently in the vehicle trajectory. A number of malfunctions detected in the inertial reference unit are discussed in reference 47.

2.6.1.3 Little Joe II

Attitude error information for the Little Joe/Apollo launch vehicle (fig. 12) was derived from a strapdown reference unit consisting of two conventional 2DF gyros (ref. 48). One gyro was orientated so that its inner gimbal sensed vehicle pitch error and its outer gimbal sensed roll error. The other gyro sensed yaw error on its outer gimbal while its inner gimbal was slaved to the vehicle roll axis. The pitch error was summed with a programmed signal to provide the desired pitch attitude history. Both gyros were captured to their orthogonal positions and had torquing capabilities which were used for ground checkout.

Vehicle damping signals were obtained from three identical spring-restrained rate gyros. As in the case of the attitude gyro package, the rate gyros and their associated electronics were packaged together, providing a single installation in the vehicle. The rate gyros also had torquing capabilities and spin motor rotation detectors for ground checkout.

The obtainable errors in the vehicle flight trajectory could be attributed directly to the drift rate of the 2DF attitude gyros. The maximum drift rates for the three axes were 0.050 deg/min in pitch and roll and 0.99 deg/min in yaw.

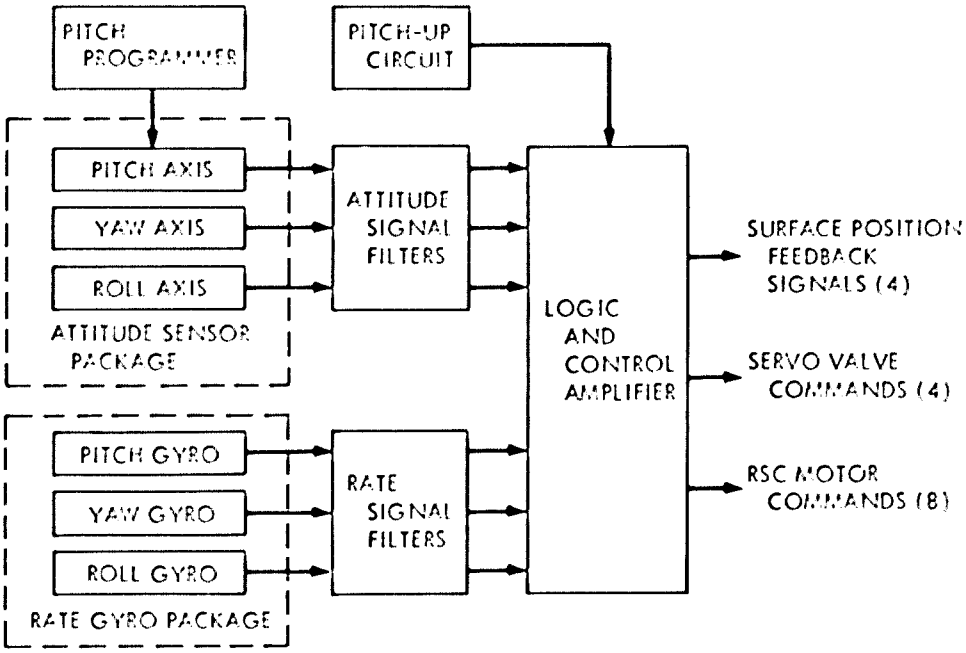

Figure 12.–Block diagram of Little Joe autopilot.

2.6.1.4 Atlas

The flight control system of the Atlas SLV-3A launch vehicle series was designed to achieve stability of vehicle dynamic responses and to provide vehicle steering by orientation of the engine thrust vectors. Guidance is provided by a radio-inertial system, and an onboard attitude reference for the flight control system is required (ref. 49).

The reference attitude for the launch vehicle is provided by three SDF rate-integrating gyroscopes (fig. 13). The signal amplifiers sum the rate and displacement gyro signals. The torquer amplifiers receive signals from the programmer and/or from the guidance system and apply a proportional torque to the displacement gyros to accomplish the commanded maneuvers.

The SLV-3A uses three rate gyroscopes that sense the rate of vehicle rotation about the pitch, yaw, and roll axes and provide the necessary lead compensation to improve the dynamic stability of the vehicle. The pitch and yaw rate gyros are remote from the displacement gyro package to be forward of the antinode of the first body bending mode during boost.

2.6.1.5 Saturn V

The Saturn V launch vehicle uses an inertial platform for control of both rigid body and elastic modes as well as for navigation (ref. 50). Vehicle attitude is sensed by the inertial platform

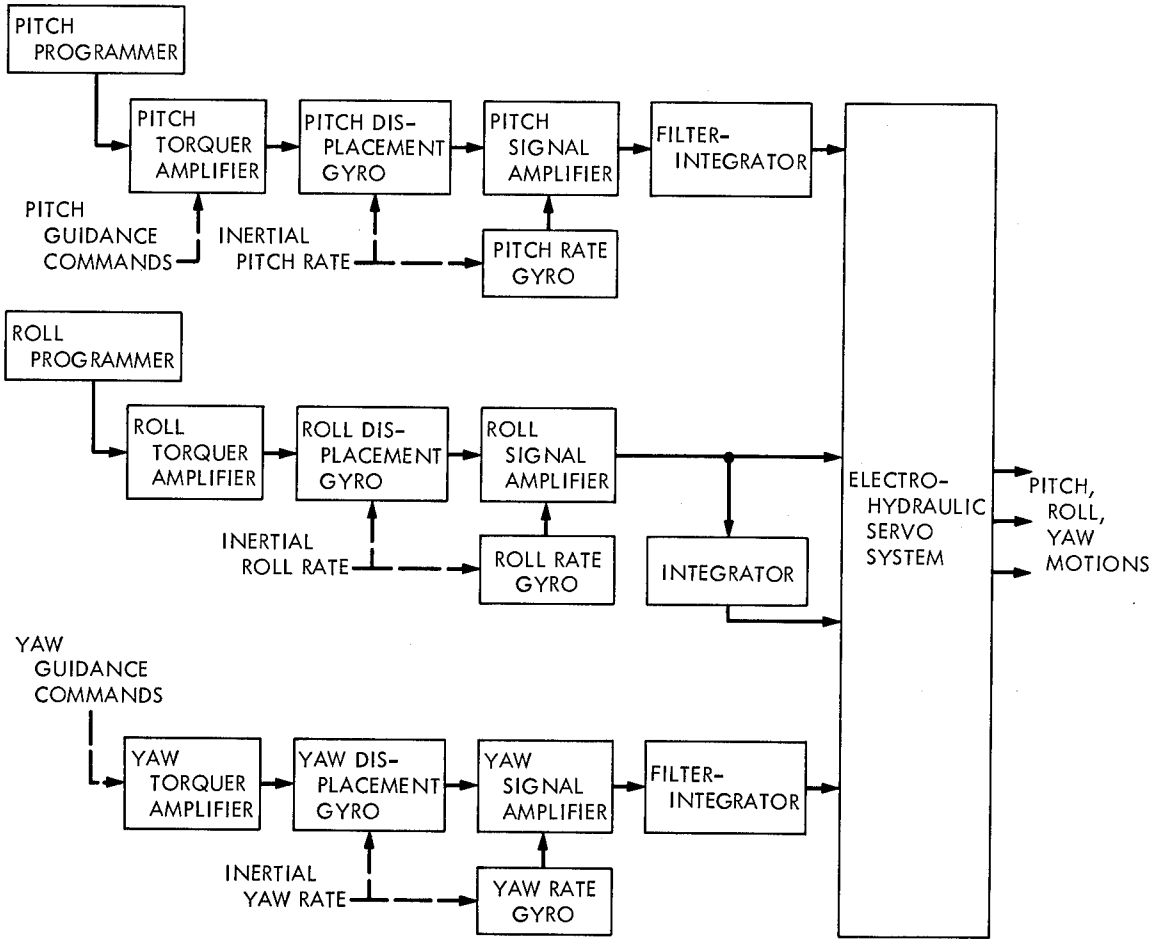

Figure 13.–Simplified block diagram of Atlas SLV-3A autopilot.

system. As shown in figure 14, these signals are processed to provide the flight control computer with vehicle attitude errors (ref. 51). The flight control computer also accepts attitude rate signals from strapdown rate gyro packages in the instrument unit and (during first-stage operation) the S-IVB stage. These signals are filtered and summed to produce engine commands for maintaining vehicle attitude control, while simultaneously providing vehicle bending moment relief for the S-IVB stage.

To provide extremely high reliability, the Saturn rate gyro package in the instrument unit is triply redundant; i.e., each axis is monitored by three independent rate gyros. Hence failure of any one gyro in an axis will not affect system operation. The flight control computer can also accept attitude error data from the Apollo spacecraft in the event of failure in the Saturn platform or at the discretion of the crew.

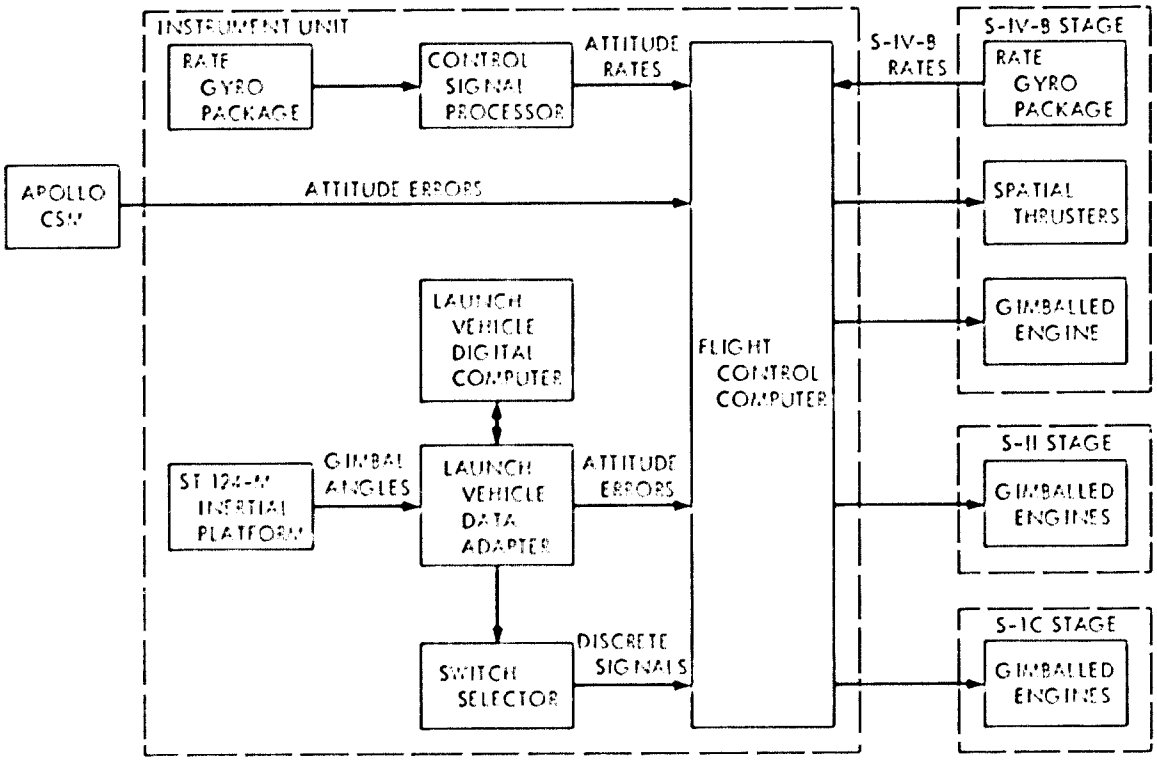

Figure 14.–Saturn V attitude control system.

The inertial components used on the platform are of the gas hydrostatic design. The gyros are built and tested to an absolute drift value and require no updating during their use. No flight failures have occurred and no major gyro problems were encountered during the Saturn man-rated program.

2.6.2 Spacecraft

This category includes those space vehicles which operate primarily in free-fall orbits. The environment is normally one of low angular rates, acceleration, and vibration. Operating lifetimes are usually long and there may be a requirement for turn-on and turn-off of the gyros to conserve power. The gyros often experience large temperature variations and possibly a high radiation environment.

2.6.2.1 Mercury

The Mercury spacecraft was equipped with two 2DF free attitude gyros to determine attitude angles between a set of fixed axes in the spacecraft and the local vertical reference. Azimuth was obtained by gyrocompassing to the orbital plane. Both attitude gyros could be slaved to the proper angles when commanded by a horizon scanner system (refs. 52, 53).

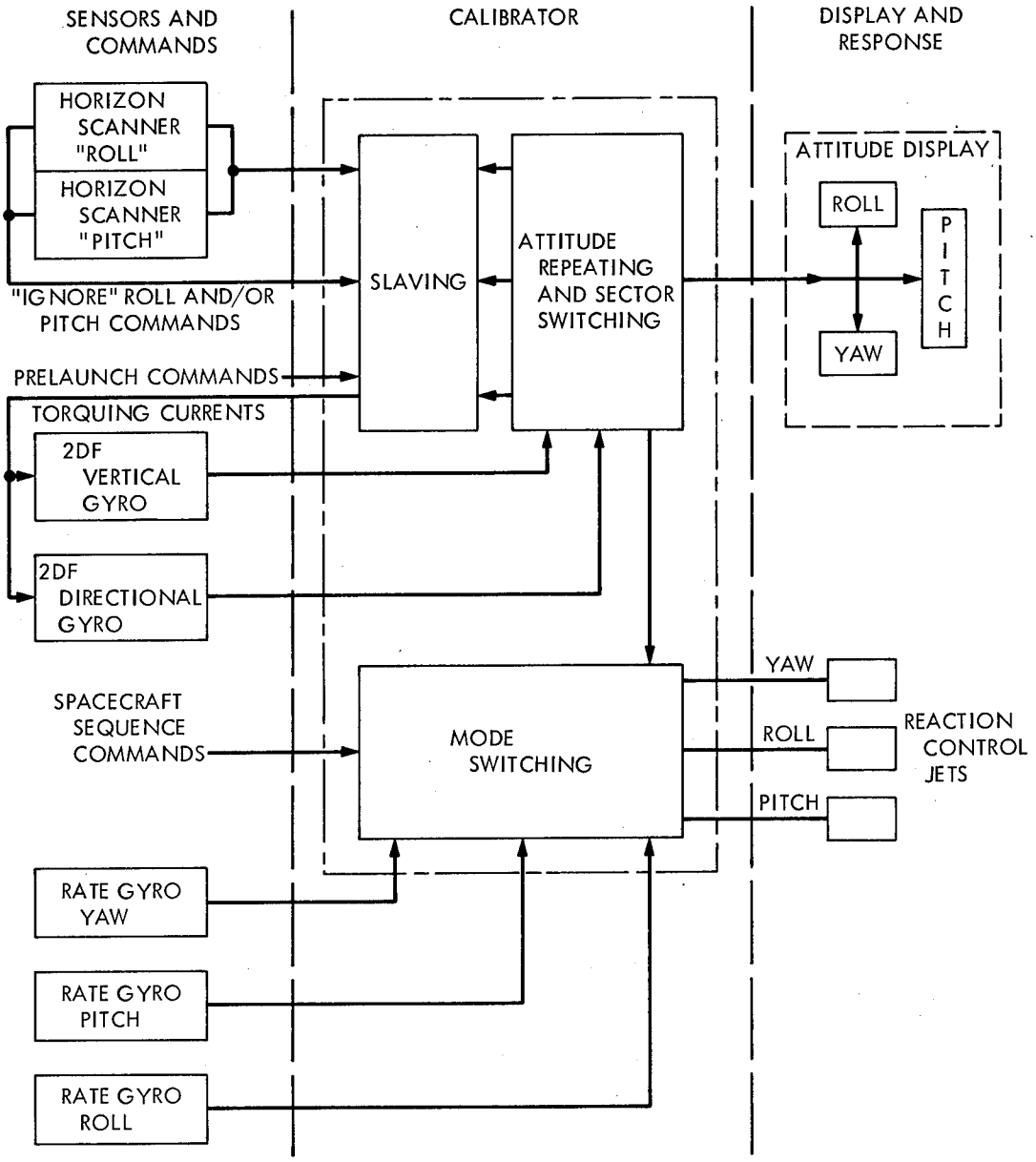

Figure 15.–Functional block diagram of Mercury attitude stabilization and control system.

The Mercury stabilization and control system (fig. 15) used the outputs of the attitude gyros in conjunction with the outputs of three SDF rate gyros. In addition, a rate stabilization and control system which used independent rate gyros was provided for backup rate damping. Summing of stick positions and rate gyro outputs provided rate control.

2.6.2.2 Gemini

The Gemini manned spacecraft required a reference that could provide stabilization about three axes and measurement of velocity changes. A platform IMU was selected over a strapdown system because the gimballed system reduced spacecraft digital computer operations for coordinate transformations and because the platform represented the lesser technical and schedule risk. The platform chosen was a modified version of the four-gimballed unit used on the Centaur program. A 100-hr runin was performed on the platform gyros to eliminate infant mortality failures and to provide stability data over runup, cooldown, runup periods. When gyros indicated stable characteristics, they were accepted for platform installation. The acceptance rate using this method was approximately 75 percent. References 52 and 54 describe the development of the Gemini IMU, including problems encountered and modifications made.

The Gemini spacecraft derived attitude information for stabilization and control from the guidance system inertial platform. Rate information for the attitude and maneuver control system was obtained from two identical rate gyro packages, each of which contained three SDF spring-restrained rate gyros. For greater reliability, the gyros were switched to allow selection by individual axis, rather than selection by package. Several significant problems encountered in the rate gyro development are discussed in references 52 and 54.

2.6.2.3 Apollo

The Apollo Command Module (CM) and Lunar Module (LM) utilized a number of different gyros in various primary and backup systems. (see table 3)

Primary Guidance and Navigation System

The IMU for the primary guidance and navigation system of the CM and LM consists of a three-gimbal platform mounting three SDF rate-integrating gyros and three SDF accelerometers. The gyros establish a space reference to keep the stable element nonrotating such that accelerations are measured in a known inertial coordinate frame. Resolvers on the platform gimbal axes measure the orientation of the spacecraft relative to the stable element. Both the gyros and accelerometers are temperature-controlled to $\pm 0.3^{\circ}C$ utilizing a single temperature controller. One of the principal design problems was to achieve reliable temperature control of all inertial components under wide variations in the environment.

The platform gyros were chosen primarily to meet a 100 000-hr MTBF goal. A 1967 evaluation of 361 production gyros indicated the MTBF goal had been met with 70 percent confidence (ref. 55). There have been no inflight failures to date. Table 4 summarizes the Apollo gyro reliability experience through May 1971. Based on inflight measurement of gyro random drift, 9 out of 12 gyros in Apollo 7, 8 and 9 achieved better than 0.015 deg/hr performance (ref. 56).

The gyros are calibrated during prelaunch activity and may also be recalibrated by the astronauts in flight against star sighting. During the Apollo 6 mission a divergence was observed between

TABLE 4.—Apollo gyro reliability experience – May 1971 (Block II-071 configuration gyros)

Number of gyros (T)[a]	249
Bearing failure prediction	
Predicted units that failed (PF)	11
Predicted units that did not fail ($P\bar{F}$)	80
Failed units not predicted ($\bar{P}F$)	0
Usefulness $= \frac{T - PF - \bar{P}F}{T - PF} \times 100, \%$	100
Efficiency $= \frac{T - PF - P\bar{F}}{T - PF} \times 100, \%$	66
Total gyro operating hours	370 800
MTBF, hours, with 98% confidence	100 000
[a]45 gyros flown on Apollo missions	
Preflight wheel hours	68 000
Flight wheel hours	4400

the attitude information supplied by the primary system and the backup strapdown system. This was first attributed to the primary system, but real-time review of prelaunch data on the backup system indicated that the measured drift would account for the divergence (ref. 56). A detailed description of the Apollo primary system can be found in references 9 and 57.

LM Abort Guidance System

The strapdown reference system for the lunar module abort guidance system (LM/AGS) uses three SDF rate-integrating gyros. The gyros are operated in the captured mode by means of a pulse torque servo-amplifier (PTSA), as shown in figure 16. The output of the PTSA is a pulse train to the computer, with each pulse representing an incremental angle. The torquing capability of the gyro is approximately 28 deg/sec.

An error budget for the LM/AGS gyro is shown in table 5. The actual performance of the instrument has generally been better than predicted. For example, over 1-day periods, the drift uncertainty is typically around 0.1 deg/hr, with equivalent results for longer periods. The day-to-day torquer scale factor uncertainties are typically under 100 parts per million. Typical test results for input axis alignment are better than 10 arc-sec.

Initially, the LM/AGS gyros experienced excessive mass unbalance sensitivity. The cause was determined to be due to storage orientation sensitivity as a result of stratification of the two-cut flotation fluid used. This problem was resolved by storing the gyros in the same orientation in which they would ultimately be used. A number of other minor design problems and modifications are detailed in reference 58.

TABLE 5.—Apollo LM AGS Gyro Performance Error Budget (ref. 58)

Error Source	Predicted Error
Gyro Fixed, deg/hr	
Time instability (8 days)	0.14
Electrical power variation	0.03
EMI	0.07
Thermal effects	0.04
Vacuum effects	0.11
Magnetic effects	0.01
Residual vibration	0.06
Total Error (RSS)	0.21
Gyro Vibration and Limit Cycle Induced Error (Powered Ascent), deg/hr	
Nonlinearity (asymmetry)	0.24
Spin–input rectification	0.02
Spin—output rectification	0.00
H-vector spin—input rectification	0.02
Anisoelastic drift	0.01
Total Error (RSS)	0.24
Gyro Spin Axis Mass Unbalance, deg/hr	
Time instability (8 days)	0.10
Thermal effects	0.07
Vacuum effects	0.18
Total Error (RSS)	0.22
Command Rate Scale Factor Instability and Nonlinearity, parts/million	
Time instability (120 days)	147
Residual shock	57
Check instability	10
Nonlinearity	65
Total Error (RSS)	171
Gyro Input Axis Misalignment, arc-sec	
Initial alignment	44
Instability	10
Total Error (RSS)	45

CM Backup Attitude System

The Apollo spacecraft obtains primary attitude information from resolvers on the IMU gimbals. Strapdown SDF gyros are used in the CM backup attitude control system for both attitude and rate sensing (fig. 17). The backup attitude reference unit contains three wide angle (±20 deg) rate-integrating gyros which can be operated in either a rate or a position mode. An additional set of three strapdown rate-integrating gyros is provided for rate information.

The strapdown inertial unit was selected after an extensive tradeoff study, the results of which are presented in table 6 (ref. 59). Major considerations in selecting the four systems for further

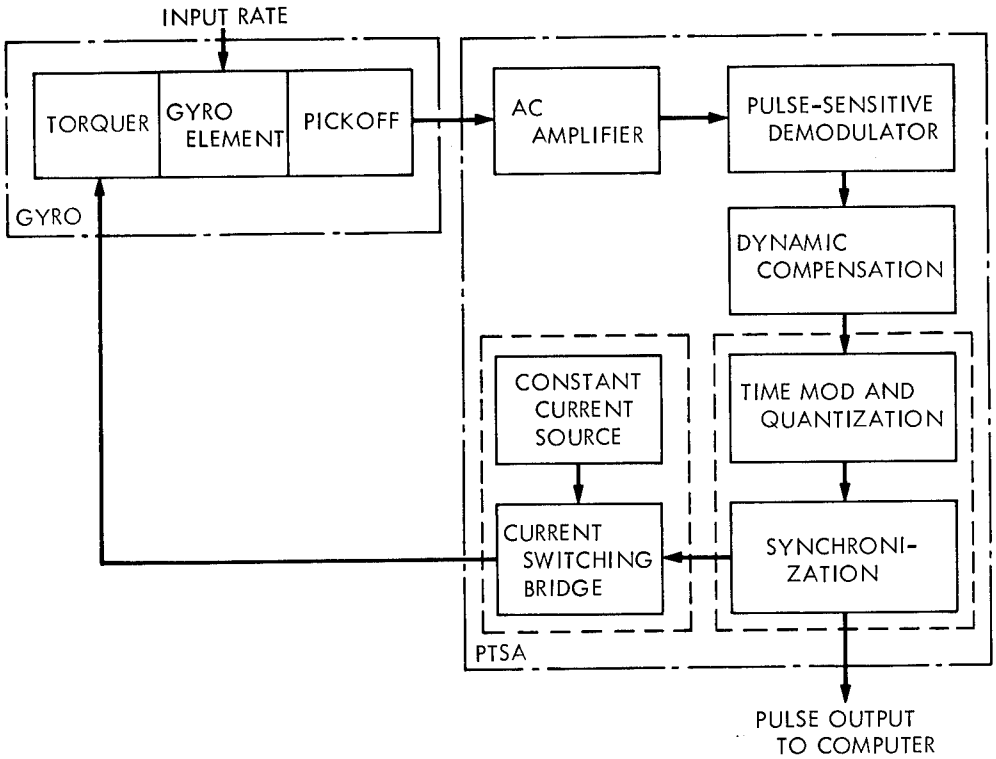

Figure 16.–Functional diagram of Apollo LM/AGS gyro loop.

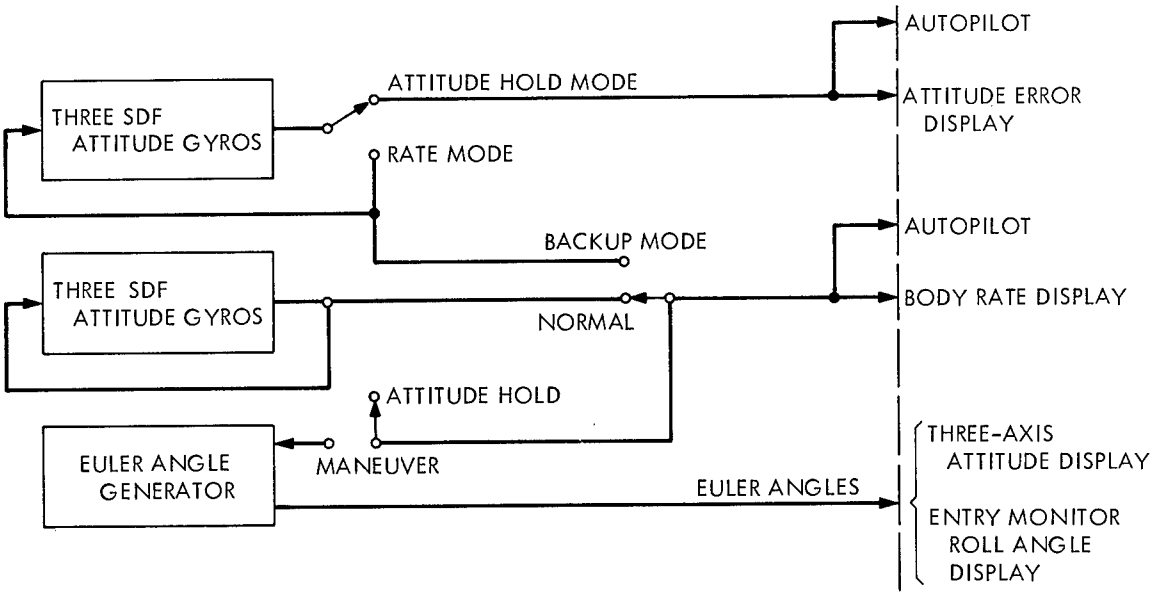

Figure 17.–Apollo CM backup attitude reference system.

TABLE 6.—Apollo Stabilization and Control Subsystem Tradeoff Tabulation (ref. 65)

System	Reliability[a]	Volume, $m^3(ft^3)$	Weight, kg(lb)	Power, W	Relative Cost	Relative Flexibility
Strapdown						
Two 2DF free gyros	0.99971	0.0202(0.715)	22.6(49.9)	64.5	1	4
Three SDF rate-integrating gyros[b]	0.99955	0.0170(0.599)	17.2(38.0)	30.1	1.8	3
Platform						
Three-gimbal stable element	0.99944	0.0385(1.36)	32.2(71.2)	58.1	3	2
Four-gimbal stable element	0.99931	0.0402(1.42)	36.7(81.0)	74.6	3.3	1

[a]Reliability equal to or greater than 0.999276 through inflight repair.
[b]Selected system.

study were the needs for compatibility with the primary inertial platform system and reliability of the backup system. The following conclusions were drawn from this tradeoff study:

(1) An inertially stabilized platform provides the best solution to the attitude reference subsystem problem from a performance and operational point of view. However, the reliability requirements result in a weight and volume penalty.

(2) The three SDF attitude gyro solution provides the best compromise for the reference subsystem. Its principal limitations are (1) accuracy errors associated with gross vehicle maneuvers (normal operation) and (2) inability to maintain an attitude reference under conditions of high and uncontrolled vehicle tumbling rates (emergency operation). It was also recommended that a hardware design study be initiated on an inflight maintainable, four-gimbal platform which, if feasible, could be phased into the program at a later date.

(3) The 2DF free gyro subsystem was the most complex system studied. This, in addition to the operational limitations (four areas of attitude singularities) and high drift rates, caused this system to be rated below the three-gyro subsystem.

2.6.2.4 Lunar Orbiter

The Lunar Orbiter (LO) attitude control subsystem utilized a three-axis strapdown inertial reference unit in a hybrid mode (fig. 18). A basic reference attitude was established by a sun sensor and star tracker. A rate damping signal was provided by a rate gyro for each axis during normal celestial hold operation with the sun sensor (pitch and yaw) or star tracker (roll). During sun and Canopus occultation periods, attitude was maintained by the gyros in the rate-integrate mode.

The functions of the attitude control subsystem were to:

(1) Acquire, stabilize, and maintain a sun orientation of the spacecraft in pitch and yaw

(2) Acquire, stabilize, and maintain a Canopus-referenced orientation in roll

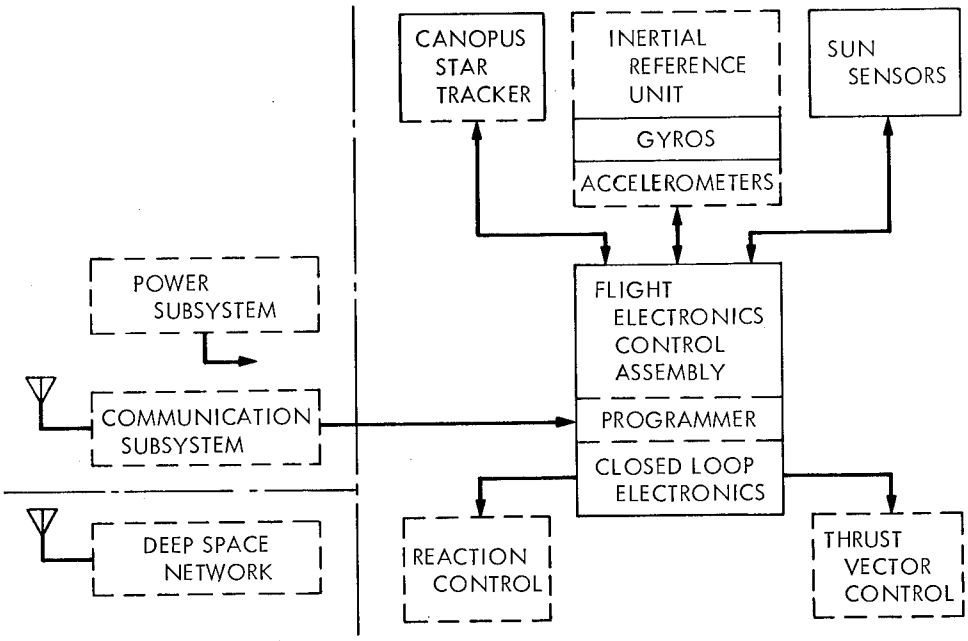

Figure 18.–Lunar Orbiter attitude control subsystem.

(3) Maneuver sequentially one axis at a time away from celestial references as desired, e.g., for photographic or velocity change purposes

(4) Hold attitude to inertial references as required, e.g., for photo sequences, for velocity changes, and for periods of sun and Canopus occultation

(5) Return the spacecraft to celestial reference orientation upon completion of the above maneuvers

(6) Point the high-gain antenna

(7) Provide delta velocity measurement and control for engine burns.

The selection of the SDF rate-integrating gyro for the inertial reference unit was based on its applicability to the Lunar Orbiter mission, experience gained with it on an Air Force satellite program and cost. Major difficulties were encountered in modifying the gyro to lower the operating temperature from 74 to 63°C. To achieve the desired damping at the new temperature the flotation fluid was changed, and weights had to be added to the float to achieve neutral buoyancy. The addition of these weights introduced *g*-sensitive drift instabilities; but the gyro *g*-sensitivity balance trim adjustment was limited to 1 deg/hr/*g* increments as the result of the damping change. The damping permitted larger than planned OA motion and potential mechanical interference between the gyro case and float unless the balance weights were maintained in a specific orientation.

Production problems were encountered associated with restarting a gyro line since the selected gyro was not in quantity production. Contamination, broken pivots, and erratic drift problems affected gyro yield and schedule. A backup program was instituted using another gyro in volume production, and no changes internal to this gyro were permitted. The backup program was able to support the LO launch schedule only because the manufacturer was ahead of scheduled deliveries on the selected gyros. These and other minor problems are detailed in reference 60.

2.6.2.5 Mariner Mars 1971

The attitude control system on Mariner Mars 1971 used an inertial reference unit (IRU) to provide a means of (1) sensing and controlling angular rates after separation and during sun–Canopus acquisition, and (2) sensing and controlling changes in spacecraft attitude when celestial references were not acquired (refs. 61–63). The IRU utilized three strapdown SDF rate-integrating gyros that operated without temperature control at spacecraft temperatures, typically 13 to 38°C (55 to 100°F). They were configured in a rate sensing mode to provide both rate and position information (fig. 19). In this configuration, the gyro pickoff output is amplified, demodulated, and fed back to the torquer through a precision series resistor to ground. The voltage across the precision resistor is proportional to torquer current and hence to input rate. Angular position information is obtained by integrating this rate signal with an active operational amplifier.

The IRU modes of operation were (fig. 20):

(1) *Acquisition.* Rate information is supplied to the attitude control electronics to provide damping of spacecraft rates after separation and during sun–Canopus acquisition.

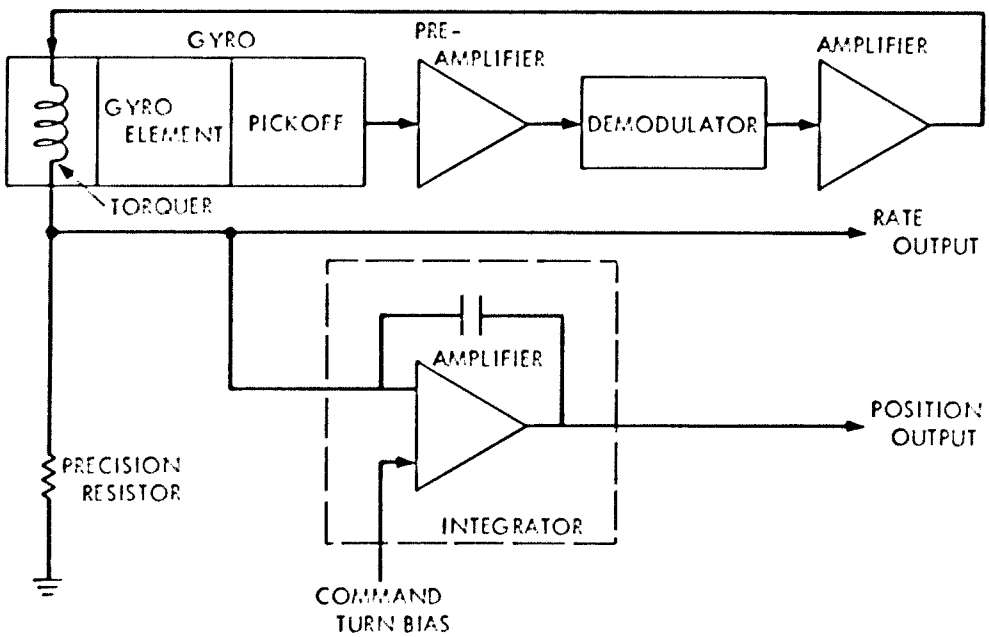

Figure 19.–Gyro loop configuration for Mariner Mars 1971.

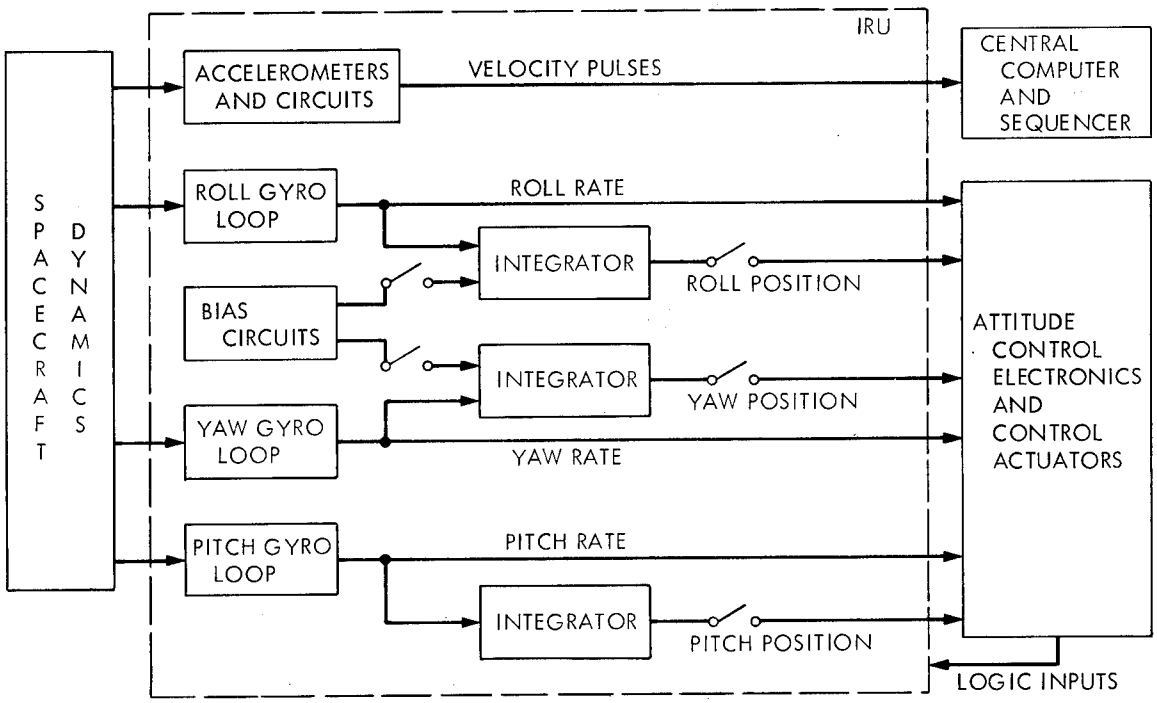

Figure 20.–Functional block diagram of Mariner Mars 1971 inertial reference unit.

(2) *Inertial.* Both rate and position information are supplied to the attitude control system to maintain constant spacecraft attitude in all three axes. This mode is utilized during motor burns.

(3) *Commanded turn.* Same as *inertial* mode except bias is added to input of either yaw or roll integrator to cause spacecraft rotation about the selected axis at a constant rate.

(4) *Roll inertial (straylight).* When angular position information is not available from the Canopus tracker, the spacecraft is stabilized about the roll axis with the gyroscope operating in the *inertial* mode. During this mode, only the roll gyro operates.

In the above four modes, the rate output of the gyros was used only for damping, and high accuracy was not required. Accuracy was, however, critical in determining angular position during the *inertial, commanded turn,* and *roll inertial* modes. Required turn angles were obtained by first commanding a known turn rate (nominally 650 deg/hr) about the axis of interest, then controlling (measuring) the time duration of the turn rate.

To obtain satisfactory operation at spacecraft temperatures, the gyro command rate scale factor was calibrated at four temperatures (30, 38, 47 and 54°C) (85, 100, 115 and 130°F) prior to launch. During operation, the required turn rate was obtained by noting gyro temperature and using the appropriate calibration. This approach provided a significant power reduction and eliminated the complexities of gyro temperature control. With this system, the achieved *commanded turn* rates were within 0.5 deg/hr of the turn rate predicted by the prelaunch calibration (3σ).

2.6.2.6 Orbiting Geophysical Observatory

During normal operation, attitude error signals for the Orbiting Geophysical Observatory (OGO) were provided by sun sensors and a horizon scanner (fig. 21a). However, during earth and Sun acquisition, a reference angular rate about the spacecraft pitch axis was established by a spring-

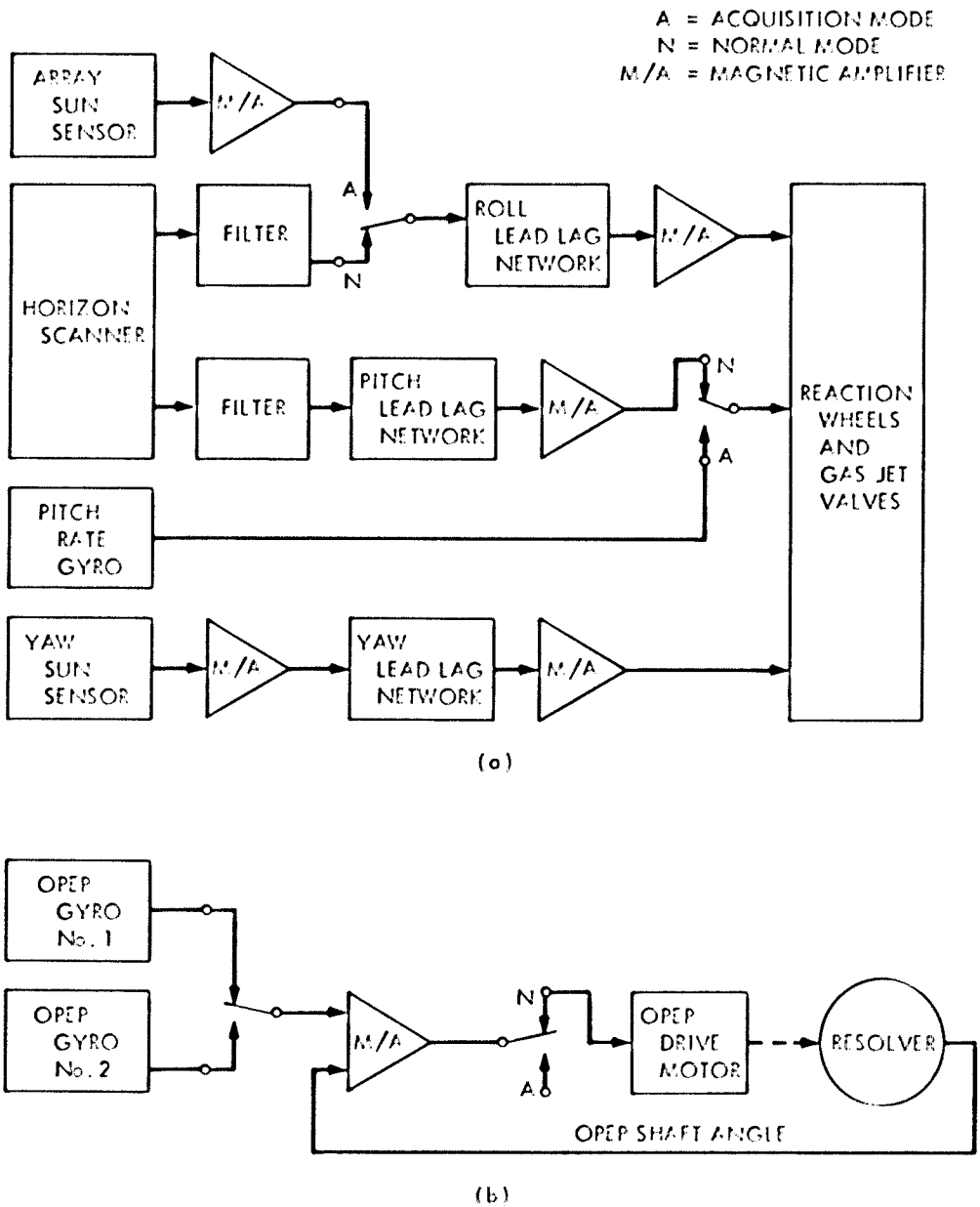

Figure 21.–Block diagram of OGO control system.
(a) Attitude control system
(b) Orbit plane experiment package (OPEP) control system

restrained rate gyro. The gyro was electrically biased such that at null, a 0.5 deg/sec rate was established. The pitch rate gyro was operated during launch and while in the acquisition mode, but was turned off otherwise. A spin motor rotation detector (SMRD) circuit indicated whether the spin motor was operating at synchronous speed and, together with a self-test torquer, greatly facilitated testing of the instrument. Problems with the pitch rate gyro were attributed to poor quality control which was a result of the gyro being discontinued as a production item (ref. 64).

Orientation of the OGO Orbit Plane Experiment Package (OPEP) was maintained by a separate gyro assembly, which detected errors in the alignment of the OPEP shaft with the orbital plane (fig. 21b). The OPEP inertial reference assembly contained two SDF rate-integrating gyros (for redundancy) which were operated in a captured (or rate) mode to serve as a gyrocompass. When the gyro IA was located in the orbital plane and was pointing in the direction of travel, there was no error signal output. If the IA was not in the orbit plane, the gyro sensed a component of the spacecraft orbital rotation rate proportional to the attitude error.

At the time of the gyro selection, the OPEP design was to use the gyro as an attitude reference with periodic resets to trim drifts. Although this scheme was eliminated in favor of the gyrocompass scheme, no major change was required in the gyro.

The possibility of damage from shock and vibration was minimized by running the OGO gyros during launch. Several gyro problems were uncovered, however, associated with power voltages, the SMRD circuit, the heat circuit, and noise. These are described in reference 64.

2.6.2.7 Apollo Telescope Mount

The Apollo telescope mount (ATM) will use sun sensors, a Canopus star tracker, and rate gyros for accurate pointing of an experiment package to acquire data on solar phenomena (ref. 65). To achieve the required pitch and yaw pointing stability in the presence of man–motion disturbances, the experiment package is isolated from the ATM by a two-axis gimballed experiment pointing system (EPS). Two SDF gyros are mounted on the experiment package to detect pitch and yaw rates. An additional rate gyro is located on the ATM to detect roll rate. These gyros may be operated in either a coarse or a fine mode; the respective maximum output rates are ± 1 and ± 0.1 deg/sec. The same type of rate gyro will be used for all three axes for interchangeability.

During the experiment pointing mode, the ATM control system obtains pitch and yaw attitude from the acquisition sun sensor and roll attitude from integration of the roll rate gyro output. The EPS uses fine sun sensors on the experiment package for pitch and yaw attitude and the pitch and yaw gyros for rate information. During occultations of the Sun, the EPS gimbals are caged at zero, and all three attitude signals to the ATM control system are determined by integration of output signals from the EPS rate gyros.

2.6.3 Entry Vehicles

This category includes all space vehicles designed for atmospheric entry. The environment is characterized by high acceleration, vibration, and temperature; the operating life is short.

Experience with gyros for navigation, guidance, stabilization, and control of entry vehicles has been limited to spacecraft returning to earth and a number of suborbital research vehicles (refs. 66, 67). The Mercury and Gemini spacecraft and the Apollo CM used the same gyros during entry as in space.

2.6.3.1 The X-15

The X-15 research vehicle was equipped with an inertial flight data system which used a four-gimbal platform containing three SDF rate-integrating gyros. Gyro drift-rate stability and repeatability were sufficiently good to allow compensation to be performed on the day preceding a flight. The X-15 inertial systems are discussed further in reference 68.

Rate gyros were also used in both the primary aerodynamic stability augmentation system and the reaction control system of the X-15. These systems are described in references 68 and 69.

2.6.3.2 The X-24 and M2-F3

The X-24 and M2-F3 lifting bodies used for entry vehicle research are both equipped with a redundant stability augmentation system (ref. 70). Nine rate gyros are used for three-axis rate sensing in a triplex configuration (fig. 22). The gyro is a SDF spring restrained rate gyro that features a wheel-speed detector for monitoring purposes and a torquer to provide self-test capability.

All equipment in each axis is triply redundant, except the third servo, which is simulated electronically. Cross-channel comparison monitors provide failure detection. Any single failure will cause at least one comparator to trip, thereby isolating the failure to a single axis and channel. Multiple critical failures will cause axis shutdown in a safe manner. Transients resulting from failures in either the gyros or the electronics are suppressed by the mid-value logic circuitry.

2.6.3.3 The ASSET

The ASSET vehicle, used to investigate aerothermal-structure problems of entry, was equipped with gyros for stabilization (refs. 71, 72). The primary function of the flight control system was to control the vehicle to a programmed flight attitude and to stabilize it about this attitude. The

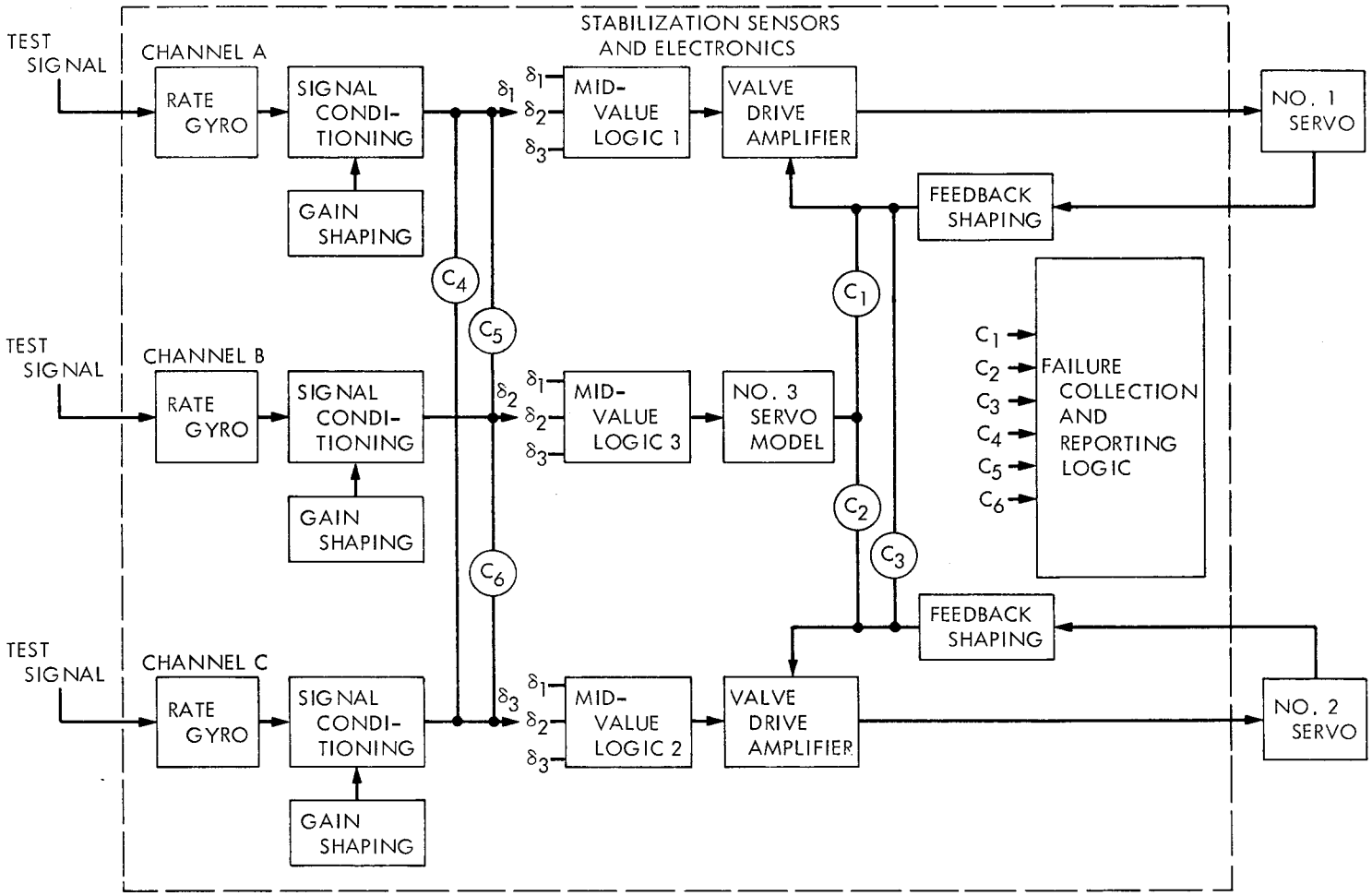

Figure 22.–Single-axis block diagram of triplex fail-operational stability augmentation system for X-24 and M2-F3.

vehicle attitudes were sensed by three body-mounted SDF rate-integrating gyros. A separate rate gyro unit contained three identical rate gyros to provide damping as an aid in vehicle control loop stability. The pitch displacement gyro was torqued to command a change in gimbal position and therefore maintained alignment relative to the vehicle axis for the predetermined glide angle-of-attack.

The only gyro malfunctions occurred during ground test operations. In two instances a high null output was observed which indicated a rate gyro "hang-up." Both gyros were disassembled and nylon debris was found in their interiors. The faulty gyros were replaced, and all units flown worked properly.

Because of unreliable radio communications during entry, ASSET was equipped with a self-monitoring flight termination system to protect all land masses. This system used a 2DF, non-floated, free gyro to provide an independent indication of vehicle yaw and roll. During flight the yaw gimbal was torqued to a null position. The roll gimbal pickoff was compared with a fixed reference voltage, and if the error exceeded a specified limit, the destruct procedure was initiated.

2.6.4 Sounding Rockets

Attitude control of sounding rockets, because of the limited useful flight time, demands rapid accomplishment of initial stabilization and orientation and quick maneuver and acquisition capability.

2.6.4.1 MK II ACS

The MK II ACS is a gyro-inertial attitude control system, which is available for the Aerobee series of sounding rockets (ref. 73). It uses two 2DF gyros as an orientation reference: one providing roll and pitch information, the other yaw information. The gyros are mounted with their outer gimbal axes colinear with the vehicle longitudinal axis. The outer gimbal of the yaw gyro is slaved to the vehicle to maintain proper alignment of the inner gimbal with the body-fixed yaw jets. When the vehicle is brought to a roll null condition using error signals from the unslaved outer gimbal of the roll/pitch gyro, a similar alignment of pitch jets to inner gimbal is realized.

Maneuvering of the vehicle is accomplished by torquing the appropriate gyro gimbal. Signals from the gyro position transducers are summed with rate gyro signals and applied to a controller which produces reaction jet action to maintain this error signal within a narrow deadband. Pointing stabilization and scan mode capabilities are also incorporated in the MK II ACS. The magnitude of maneuvers is fixed by controlling the time during which voltage is applied to the gyro torquers. A digital programmer-timer is used for this purpose, as well as to control the time during which a fixed attitude is held.

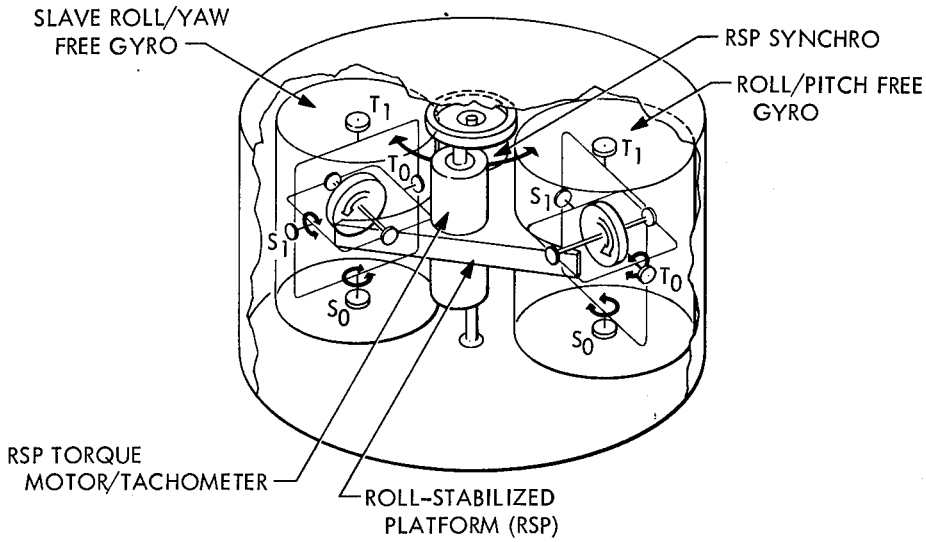

T_1 = INNER GIMBAL TORQUER S_1 = INNER GIMBAL PICKOFF

T_0 = OUTER GIMBAL TORQUER S_0 = OUTER GIMBAL PICKOFF

Figure 23.–STRAP III roll-stabilized platform.

2.6.4.2 STRAP III

The Stellar Tracking Rocket Attitude Positioning System (STRAP III) was developed to provide three-axis orientation of sounding rocket payloads (ref. 74). Three-axis inertial coarse attitude is provided by two 2DF free gyros mounted on a roll-stabilized platform (RSP). The RSP (fig. 23) is slaved by a servo to the roll gyro output signal. The platform isolates the gyros from the high roll rates of the spin-stabilized portion of flight and hence eliminates the gyro inner gimbal spin-induced drift.

Pointing the rocket at preselected targets is accomplished with electrical torquers which torque the gyro gimbals at a fixed rate for a preset time, thus causing a position gyro error. Since the system is "null seeking," the rocket follows the moving gyro gimbal. Accuracies of ± 3 deg and limit cycle magnitudes of $\pm 1/8$ deg at body rates of 1/8 deg/sec or lower are obtainable using only the gyro inertial control system. Three SDF rate gyroscopes with an input capability of 40 deg/sec are used to provide damping for system stability.

The STRAP III has also employed an inertial grade rate-integrating gyro package to obtain high-resolution data from targets which cannot be tracked otherwise. These units can provide inertial drift rates of less than 0.1 deg/hr (compared to the 6 to 10 deg/hr capability of the two-axis free gyros). Limit-cycle magnitudes of ± 5 arc-sec at rates of less than 5 arc-sec/sec have been achieved in flight.

2.6.5 Miscellany

One of the first questions the designer should ask is whether a gyro or some other technique should be used for a particular application. The SPARCS sun-pointing system used on the Aerobee sounding rocket is an example in which another technique was selected instead of gyros to provide attitude and rate information. Since SPARCS is limited to the sun-pointing mission, sun sensors (for two axes) and magnetometers (for the third axis) are used to provide attitude information on the spinning vehicle. The use of the signals from these same sensors to calculate rate information in lieu of rate gyros results in a less efficient, more difficult to analyze, spiral capture of the sun. The main advantage of the system is that it has very few moving parts. In this case, a simple spring-restrained rate gyro would probably have provided a simpler, more flexible and less expensive system.

Another important question is how to meet the required reliability. In Apollo, ground control is given the primary responsibility over the onboard inertial system except where there is no choice, such as during powered flight, flight behind the moon, and earth entry. Great care was taken to provide backup redundancy for the inertial systems. The IMU in the CM is identical to the one in the LM, thus providing a spare. The backup system for the LM is a strapdown system, as different and as isolated as possible from the primary platform system, in order that a single common failure would not endanger both. Although the inertial systems experienced problems during development, their inflight performance has been excellent.

Gyro users have long debated whether it is better to run the gyro continuously or turn it on and off. The tradeoff is between unnecessary power consumption and wear, as opposed to preliminary degradation and the risk of the gyro failing to start. On Lunar Orbiter the gyros ran continuously, although they were switched between rate and rate-integrating modes. However, the Mariner gyros were on only for launch (nonfunctional), for separation rate damping, for optical acquisition phases, and during midcourse corrections and terminal pointing, because the missions were much longer and the available power was more limited.

In general, the effect of the space environment is beneficial to gyro performance; the zero-g condition eliminates all acceleration-sensitive errors, greatly improving the gyro's drift performance. However, an exception to this rule was encountered with the relatively inexpensive 2DF gyros on Aerobee, which actually performed better on the ground than in space. The problem was with sensing low rate thresholds. In the space environment, the static bearing friction and the slip-ring friction were enough to cause the gyro to "lock up" and move very slowly with the vehicle without detecting vehicle rotation. On the ground, small external vibrations plus earth rate were enough to prevent bearing stiction. To overcome the problem several operational fixes were attempted. The first was to intentionally place the entire vehicle in a forced limit cycle oscillation. This approach had obvious disadvantages, including the higher reaction control fuel required. The second approach was to mount electrical vibrators on the gyro cases. This was not entirely satisfactory and increased the total power requirements. The problem was finally solved by introducing a slight unbalance in the gyro rotor which created just enough vibration

to prevent sticking. Interestingly, the problem did not arise until the gyro manufacturer obtained new precision testing equipment which permitted him to produce gyros with extremely low wheel unbalance.

Judging from the numerous case histories, the most serious and costly mistakes occurred when the systems user treated the gyro as a simple component (much like a relay, switch, synchro, etc.) and when a new gyro design was instituted at vehicle control go-ahead time. In spite of full qualification, configuration management, reliability testing, and associated monitoring effort, some of these designs fell behind schedule. On one such project a seemingly simple gyro part, the fluid expansion compensating bellows, costing about $30, remained a "simple" part until it failed fatigue testing. To replace this unit with an improved one delayed gyro delivery by about 35 days. The total cost, reflected up through systems test, system qualification, launch facilities, services, and schedules which were brought to a virtual halt, was measured in thousands of dollars per day.

2.7 Testing and Evaluation

The purpose of testing and evaluation is to assure the user that the gyroscope will perform satisfactorily during the mission. The test data thus forms the basis for acceptance of gyros. Moreover, increased testing, although raising the purchase price, can result in a lower cost per use hour via a longer and more reliable performance life by rejecting deficient gyros. An important function of gyroscope testing and evaluation is to permit the *prediction* of performance at some future time (i.e., during the mission). This requires systematic record keeping of variations in measurable parameters from gyro to gyro, and from time to time in the same gyro, along with careful analysis of the test data. Proper testing and "parameter monitoring" require extensive knowledge of gyro characteristics and effects of parameter changes. Descriptions of such characteristics and parameter changes can be found in reference 75.

It has been estimated a typical set of spacecraft gyros will have a test history distribution approximately as shown in table 7. The Lunar Orbiter gyros were typically operated about 1000 hours during the phases from manufacturer to launch. This time would tend to decrease with the project's life, particularly if only minor gyro or system problems were experienced.

TABLE 7.—Typical Spacecraft Gyro Test History

Phase	Percent of Total Test Time
Gyro manufacturer	40
Systems (including acceptance, integration and system test)	30
Prelaunch	10
Flight monitoring (including telemetry data reduced for gyro performance evaluation vs only go/no go)	20

2.7.1 Types of Tests

Gyroscope tests can be conveniently separated into three general categories:

(1) In-Process Tests. In-process tests are performed on subassemblies during the manufacturing sequence and on the final assembled instrument. Examples of less elaborate quality control tests are resistance and continuity checks, insulation and circuit isolation tests, including the so-called Hi-Pot or megger tests, and weight and CG checks. More elaborate tests include float freedom, motor phasing, and flotation checks. The latter tests are often performed on the final test stand just prior to the beginning of the performance tests.

(2) Performance Tests. Performance tests are conducted on all completed units to provide assurance that the performance specifications are met. The principal test in this category is the acceptance test, which follows a formally documented, detailed procedure. The acceptance test is normally the basis for acceptance of the unit by the customer, generally with the understanding that the unit will satisfactorily pass an acceptance test at any time during its specified life. Certain portions of the acceptance test, along with monitoring of selected parameters, are repeated on each unit periodically. This repetitive testing and monitoring provides a history of specific performance values, relating them to unit life, thermal conditions, power measurements, and other selected parameters to allow a prediction of continued performance and to establish indicators of incipient degradation. While not specifically a test for performance, diagnostic testing examines the causes of performance degradation so that such degradation may be minimized through construction or use changes.

(3) Environmental Tests. Environmental tests may include any of the following (ref. 76):

(1) Electrical variations

(2) Life

(3) High/low temperature

(4) Mechanical shock and acceleration

(5) Thermal shock

(6) High/low pressure

(7) Vibration

(8) Acoustical noise

(9) Thermal radiation

(10) Air currents

(11) Nuclear radiation

(12) Magnetic fields.

The specific test program is selected to conform to the needs of the particular space vehicle mission. However, some tests, such as the effects of zero-g (ref. 77), may be impossible to perform

in a ground-based laboratory. Life and environmental tests are generally performed only on a few selected units to establish general conformity of performance under the specified conditions and to establish expected performance changes.

2.7.2 Gyroscope System Test Program

Most space vehicle applications incorporate a number of gyros into a system with integrated power supplies, thermal controls, and other electronics. The performance of the gyro mounted in the system is not the same as when tested individually because of changes in mounting, alignment, and vibratory and thermal conditions, and in the manipulation of the inputs and outputs by the system electronics and/or gimbal elements. Thus most space vehicle gyros are tested with the complete system for performance under expected environmental conditions. Repetitive tests are made during the life of the complete system and correlated with prior component tests to monitor parameter trends and predict the mission performance as accurately as possible.

2.7.3 Test Data Evaluation

The test data to be recorded and the evaluation techniques to be utilized depend on the system requirements, the cost, and the specific test objectives. The most useful data for predicting the gyro's performance is the trend or stability of its performance coefficients. If repetitive testing and monitoring is conducted at programmed intervals on each gyro and system, trends and erratic behavior can be noted. From these it is possible to make some predictions as to future changes and to establish some indicators of incipient degradation. With data derived from the environmental tests, changes due to expected environments can be included in predicting the gyro performance. Catastrophic failures are avoided by removing units which indicate excessive changes. Failure analyses on these units are essential in understanding the changes and developing corrective action.

Various statistical treatments are used to enhance the confidence level of the conclusions drawn from the test results. For example, the elegant method developed for gyro performance prediction in the Poseidon system is described in reference 78. The technique used for the Apollo platform gyros is presented in reference 52. Other examples of such treatments may be found in references 36, 77, 79, and 80.

Clear-cut, consistent predictions of future gyro performance cannot always be obtained by the above techniques. A major limitation is that space vehicle applications do not usually involve sufficiently large numbers of gyroscopes for the accumulation of accurate reliability statistics. Also, practical test limitations often prevent performance tests being conducted under the exact mission conditions, and extrapolations must be made. Despite this, the presentation of gyro case histories, coupled with parameter monitoring and engineering judgment, is the only currently feasible method for predicting gyro performance.

2.7.4 Prelaunch Checkout and Flight Monitoring

After installation in the space vehicle, the gyro system is recalibrated and a number of tests are made in prelaunch configuration. These tests depend upon the particular mission, the system configuration, and the spacecraft limitations, but they generally include:

(1) Alignment check of gyro system to spacecraft

(2) Go/no-go checks

(3) Parameter monitoring (temperature, wheel rotation, power, etc.)

(4) Alignment to chosen coordinates (gyrocompassing, line-of-sight to ground or star, etc.).

Flight monitoring of a given system depends on the many constraints imposed by the general configuration and operational characteristics of the gyroscope system. In most spacecraft, the gyros are updated at selected times from data computed from a master reference system, optical direction sensor, radar, or ground sightings. Selected indicators of failure are monitored so as to switch control to an alternate system if necessary. Performance parameters that may be monitored to aid in flight decisions and postflight failure analyses include gyro temperature, wheel power, excitations, etc.

2.8 Advanced Concepts

Some of the newer types of gyros offering promise for future applications are briefly discussed below. More detailed descriptions of the operating principles and features of these gyros and a variety of others are contained in reference 81.

2.8.1 Laser Gyro

The laser gyro detects rotation by monitoring the phase shift between two oppositely directed laser beams traversing a closed path. In principle, the counting of one fringe shift is a measure of inertial rotation through an angle typically of a few arc-seconds. In practice, to prevent mode locking, the beams have to be uncoupled either by dithering the beam through mechanical rotation or by using electromagnetic polarizing devices. The accuracy of the sensed angular velocity is of the order of 0.1 to 1.0 deg/hr. The laser gyro's advantages are short warmup time and no moving parts. There are errors proportional to acceleration and temperature due to their action on the structural geometry. Problems with short operating life still exist. A buy of a statistically valid number of systems is needed to establish enough data to make the laser gyro competitive with conventional gyros.

2.8.2 Electrically Suspended Gyro (ESG)

The ESG is a free-rotor gyro using a lightweight spherical rotor suspended in an evacuated housing by an electrostatic field. The attractive force on the rotor is controlled by making the capaci-

tance between the rotor and its housing part of a tuned circuit. This circuit controls the current to the capacitance in such a manner as to keep the rotor centered. Spin-up of the rotor is achieved by a gas jet or by inducing an eddy current into the rotor with the motor coils. The motor coils also provide a means of nutation damping and spin vector alignment. After spin-up the motor is not used; active speed control is maintained by the suspension electronics in one version. However, the drag on the rotor is so small that it takes thousands of hours for the gyro to run down without a speed controller. For readout, a controlled mass unbalance is built into the rotor of one device, and the spin axis attitude is sensed by observing the mass unbalance modulation of the suspension pickoff signals. In another ESG, the angular motion of the case relative to the rotor is read optically. An extremely precise ESG being developed to test Einstein's general theory of relativity (ref. 82) utilizes the magnetic moment generated by a rotating superconductor for readout. The main advantage of the ESG is extremely high accuracy. However, the rotor must be prevented from touching the case after a sudden power loss, else the gyro suffers a catastrophic failure. Both platform and strapdown configurations of the ESG have been evaluated. The ESG has found application as a monitor gyro for precision navigation systems.

2.8.3 Cryogenic Gyro

This is a free-rotor gyro very similar to the ESG; it consists of a superconducting metal rotor suspended by a magnetic field. At temperatures near absolute zero the rotor becomes a magnetic insulator; when subjected to a magnetic field it repels the walls of the case and stabilizes in the center of a spherical cavity without the use of any external electronics. The only requirement for maintaining the suspension is a continuous supply of liquid helium, which is the main disadvantage of the system. The angular motion of the case relative to the rotor is read out optically at a very slow rate so that the illumination energy does not raise the temperature of the superconducting sphere.

2.8.4 Tuned-Rotor Gyro

The tuned-rotor gyro is a 2DF, dry gyro which gets an effective magnification of the gyro coning period by operating near a structural resonance of its support. This gives a performance capability of 0.005 deg/hr without flotation. It is claimed that the gyro can provide this precision at a cost of a few thousand dollars per axis. Platform versions of these gyros are now used in aircraft navigators but have not yet been used in space. High-torquing-rate versions are being developed for strapdown applications. For space vehicles, the major advantage would be lower cost and power requirements at this performance level. Until the gyro is proven in operation, however, the risk will be higher than that of other gyros. Also, the tuned-rotor gyro must be protected from vibration environments that have significant energy at frequencies near the gyro resonance.

2.8.5 Vortex Rate Sensors

These devices are typically used to sense vehicle angular rates for the flight control of weapons. As a result, much of the information about them is classified. They use fluid or gas as the moving

medium and are therefore useful in systems which employ no electronics. The accuracy is of autopilot quality or worse, but the cost is low and the reliability very high.

2.8.6 Multisensors

It is possible to build an inertial sensor that measures angular rotation and linear acceleration in the same unit. The advantage is lighter weight and smaller size. Some such units have been built, and this approach may be extended in the future. A 0.86-kg (1.9-lb) inertial platform using two multisensors is now undergoing flight testing for possible aircraft navigation and missile guidance applications (ref. 83).

2.8.7 Other Devices

A number of devices which have been built to measure inertial angular rotation have either not proven competitive with existing gyros or have not yet been developed enough to be considered for space vehicle applications. Some of these are the nuclear gyro, particle gyro, fluid gyro, and vibrating rod.

3. CRITERIA

Space vehicle gyroscopes should be selected to establish a coordinate frame or to measure angular velocities relative to specified reference axes under all anticipated mission conditions. The gyroscope should achieve specified accuracy and reliability of performance within allotted volume, weight, and power consumption constraints. The design should satisfactorily minimize susceptibility to all inherent factors that can potentially degrade reliable performance. These factors include the testing and operational environment, the various interfaces between the gyro and the space vehicle, possible interference sources, and the gyro's functional characteristics. Demonstration should be made, by a suitable combination of analytical and experimental studies, that the gyro design is entirely suitable for its intended application.

3.1 Applications

First, the question of whether a gyroscope is required or not for the given mission should be answered. If it is so determined, all specific applications to which the gyroscope might be put should be considered. These include:

(1) Navigation and guidance

(2) Vehicle stabilization and control

(3) Tracking and pointing

(4) Flight data analysis.

The gyroscope design should be selected to provide the angular rate and/or position information required by the space vehicle for each application. The use of the same gyro for several applications should be evaluated where possible.

Environmental specifications should include conditions to be experienced during handling, storage, shipment, assembly, test, prelaunch, launch, and all phases of flight. A model or specification, sufficiently accurate for evaluation purposes, should be established for each of the following environmental factors. The combining of test environments should also be considered.

(1) Acceleration

(2) Angular rate and total rotation

(3) Shock and vibration — both linear and angular

(4) Temperature

(5) Radiation

(6) Magnetic field

(7) Noise

(8) Humidity

(9) Lifetime

(10) Vacuum.

3.2 System Design

Strapdown and platform configurations, if applicable, should both be considered for the system design. The choice of configuration for a particular application should be the result of a tradeoff study.

The gyroscope system should be designed and packaged for ease of alignment and calibration. To the extent possible, the gyro package should be prealigned prior to mounting in the space vehicle. Once the gyro package has been installed in the space vehicle, the physical alignment or alignment verification between the gyro and other sensor axes may also be required.

Interface conditions should be specified, if possible, by interface definition documentation. It should be demonstrated that both the gyro package and the system to which the package interfaces will perform satisfactorily where the specified conditions exist. It should also be demonstrated that the gyro package will not be adversely affected by the presence or the operation of other spacecraft systems. Consideration must be given to several factors:

(1) Electrical interfaces with the spacecraft electronics and power system by means of ground currents, electrostatic discharges, magnetic fields, and electric fields

(2) Mechanical interfaces — including stability, rigidity, and effects of mounting and demounting, alignment and access, and thermal expansion

(3) Thermal interfaces between the gyroscope and spacecraft (heat transfer by conduction or radiation)

(4) Radiation interface with radioactive devices (nuclear power or calibration sources)

(5) Interfaces with the gyro test equipment.

The specification of output signal format (either digital or analog) should be based on an evaluation of the amount of signal processing to be performed and the extent of analog-to-digital or digital-to-analog conversion required. The data rate and quantization levels for digital signals must be adequate to represent the expected input rates over the entire instrument range.

3.3 Gyro Selection

The selection of a gyro for a specific application must be carefully exercised by means of an iterative, parametric tradeoff process. The type of gyro should be tentatively selected by considering the basic input, output, performance, and reliability requirements for the application. Foremost consideration should be given to gyros which have a proven record in similar applications. The choice of spinmotor design (ball or gas bearing) for a given mission should be based on an evaluation of the history of proven bearings in view of system requirements. Where proven types of gyros require substantial modification to meet the mission requirements or provide inadequate performance margin, consideration may be given to the use of new types of gyros. The overall gyroscope precision must not be overspecified but should be consistent with the error budget allocated to the gyro.

The gyro should operate satisfactorily in the mission environment and should minimize susceptibility to factors inherent in the operational environment and the vehicle installation, including various interfaces and design tradeoffs between the gyro and the spacecraft, the spacecraft environment, and the interference sources.

Gyro parameters and performance specifications should be realistic in relation to the system requirements and consistent with manufacturing feasibility. To the extent possible, IEEE standards should be followed in establishing all component specifications. The characteristics of individual gyro components should be examined for compatibility and for assurance that the properties of one component do not unnecessarily constrain the selection of other components. The gyro specification should define the susceptibility of each component to degradation in operational and test environments to insure reliable performance throughout the mission.

3.4 Reliability

Stringent quality control and extensive qualification testing of gyroscope components and the assembled gyro should be considered as primary methods of maintaining reliability. If statistical

data is available from a sufficiently large gyro population, this should be considered as the primary indicator of that gyro's reliability. Otherwise, histories of failure modes shall be maintained to determine areas in which the gyro's reliability can be enhanced, and system monitors of the gyro should be specified to obtain trend indicators that provide a complete gyro profile history on an individual basis. Changes caused by component degradation, manufacturing, and environmental effects should be determined and evaluated.

The operational lifetime of the gyroscope should be adequate for the mission reliability requirements and should be demonstrated by approved analyses and tests. For critical applications, redundancy at the system or gyro level should be considered to achieve the reliability requirements. The gyro system should be as insensitive as possible to electrical malfunctions and transients in other subsystems. A major factor limiting operating life is gyro spin axis bearings, and since their integrity is difficult to predict and verify, all aspects of their performance should be of concern. The regulated temperature, if required, should be as low as possible for the system application since elevated temperatures tend to reduce gyro life. Shelf storage and transport modes should be adequately controlled to prevent damage to the gyroscope. Periodic testing and reorientation of gyros in storage should be conducted. These nonoperational modes should be constrained to safeguard the gyroscope with respect to all other mechanical, thermal, and magnetic environments as well.

The importance of the human factor must be appreciated by both gyro and system designers. Controls should be required to preclude gyro damage or performance degradation resulting from shock due to careless handling, temperature extremes due to unprotected-controller failure, connector abuse, and magnetization due to improper choice of checkout instrumentation.

3.5 Testing and Evaluation

A comprehensive testing program including in-process, performance, and environmental tests should be conducted to sufficiently establish that the gyroscope performance parameters are within specifications under all expected operating conditions. Test requirements for any gyro should be carefully specified in the gyro-to-system interface specification as well as in the gyro specification. A definition of the relationship between the test electronics and the system electronics should be included in the specification. Provision should be made early in the program for gyro system monitors, with special emphasis on diagnostic tests that may be necessary, especially at higher levels of integration in the spacecraft. Because of their impact on gyro design, test procedures and associated system interface decisions concerned with the inclusion of wheel-speed verification or other operational monitors and optimized system power sequencing must also be made at an early stage. Consideration must be given to "pyramiding" tolerances; i.e., test limit tolerances at any level should be narrower than at each subsequent level.

The test environment for ground tests should simulate the operational environment as closely as possible, with allowance in interpreting the results made for any differences. All completed gyro

packages should be subjected to acceptance tests to verify conformance to the specified parameters and interface requirements. Engineering evaluation tests, including environment tests, and qualification tests should be conducted on as many units as practicable.

If possible, complete systems tests should be performed using operational flight electronics. Means should be provided to verify the correct operation of all features of the gyro package, including any redundancy or repair mechanisms, after its installation in the spacecraft or in a fixture that duplicates the spacecraft installation. Spacecraft integration system tests should verify compliance with the gyro system interface and performance specifications. The gyro package installation and operation should be evaluated by calibration and alignment tests.

During prelaunch checkout and flight, critical gyro performance indicators should be continuously monitored. Provisions should be made for prelaunch alignment relative to the established reference frame and for realignment during flight in the event of loss of reference. Means should be provided to detect gyro failures, and consideration should be given to the prediction of potential failures.

4. RECOMMENDED PRACTICES

It is imperative that personnel from gyro component and system design groups, as well as other concerned groups, work closely together throughout the gyro design or selection and development and participate in all tradeoff decisions. Changes should be avoided if possible, *since there are no "minor" changes to gyro design*. Any gyro design change should be thoroughly qualified in the gyro and in the system. Experience has shown that the development sequence should involve (1) using the best analytically established design possible, (2) putting the gyro in the field in large numbers, (3) establishing a vigorous field-failure investigation procedure, (4) determining the field-failure modes and their causes, and (5) continually correcting the design and manufacturing procedures to eliminate nonrandom failure modes.

Thus the preferred gyro would be one of a mature design which fits the applicable performance requirements, has been proven in the field, and is currently in large-quantity production by a reliable gyro manufacturer.

4.1 Applications

The functional purpose of a gyroscope for a specific application should be clearly defined in the earliest mission planning stages so that the required gyro model and system configuration can be selected. The control modes, environments, and system performance and interface requirements which constrain the gyro application should be carefully defined for each mission phase (prelaunch checkout, boost into orbit, orbit change, velocity corrections, entry, etc.).

4.1.1 Mission Objectives

Generally, gyros used to provide reference frames for guidance or navigation should be of high accuracy, with uncertainty drifts of less than 0.1 deg/hr. These could successfully be configured in either a platform or a strapdown system. In the strapdown configuration, the same gyros should be considered for use as the controlling rate gyros.

For most vehicle stabilization purposes, relatively inexpensive spring-restrained rate gyros should have sufficient accuracy and stability. For some critical stabilization loops, for example, where an order-of-magnitude drift performance improvement is desired as compared to the spring-restrained gyros, a small rate-integrating gyro operating in the rate mode is recommended. It is generally true that gyros should be vehicle-frame-mounted where stabilization signals are desired. Gyros used for attitude reference should be typically of medium quality, with drift uncertainties in the range of 0.1 deg/hr to a few degrees per hour.

Gyros should be considered for rate-aided tracking applications and in systems requiring a pointing reference or memory. In general, these gyros should be accurate in sensing high-frequency rotation, but they may be subject to low-frequency drifts as high as several degrees per minute.

Consideration should be given to using gyro stabilized reference data outputs for reconstructing the flight history of a space vehicle. The data may be recorded by an onboard device which is later recovered or telemetered during flight and recorded at the receiving installation. In either case it may be necessary to multiplex the gyro data with other information (accelerations, temperatures, etc.), in which case the bandwidth of the desired gyro data must be specified.

4.1.2 Environment

The gyro applications engineer should be able to define with considerable accuracy the environments his units will have to undergo. Mission duration and acceptable lifetimes should be established. The durations, magnitudes, and combinations of vibration, acceleration, shock, temperature, pressure, radiation, and other environments should be predicted to the highest degree possible. The gyro user should attempt to tabulate each aspect of the anticipated environment as a preliminary guide to the system specifications. This can often be accomplished most conveniently as a function of the mission phases. An example of such a tabulation is presented in table 8 for a typical earth-orbital spacecraft.

In defining the environment specifications, two conflicting cost-oriented factors should be considered. The total cost of the space mission including design, hardware, booster, launch facilities, and services is so great that some margin should be included in the environment specification as a

TABLE 8.—Example Tabulation of Typical Gyro Environment as a Function of Mission Phase

Environment	Mission Phase				
	Prelaunch	Boost	Orbit Insertion	Orbit	Course Correction
Acceleration	2 *g*	11 *g* max, 85 sec	17 *g* max, 43 sec	0 *g*, 1 yr	0.6 *g*, 5 sec
Angular rate		± 3 deg/sec, control	4 deg/sec	240 deg/hr, 1 yr	± 1 deg/sec, 1 min
Shock	50 *g*, 11 msec		240 *g*, 0.3 msec		
Thermal	−18 to 60°C	15–38°C	15–38°C	1–47°C	
Magnetic field	$3 \pm 0.6 \times 10^{-4}$ T (Tracker and earth fixed)	$3 \pm 0.6 \times 10^{-4}$ T	$\approx 3 \times 10^{-4}$ T	$\approx 3 \times 10^{-4}$ T	$\approx 3 \times 10^{-4}$ T
Life service	1000-hr testing	Nonoperating	Nonoperating	Continuous 9000 hr	Seconds
Start-stops	200			6–10	
Vibration:					
Sinusoidal	± 5 *g* 5–50 Hz	12 *g* max 20–2000 Hz			
Random		15 *g* rms, 20–2000 Hz	15 *g* rms, 20–2000 Hz		4 *g* rms 300–2000 Hz
Slew (emergency)	1.5 rad/sec			1 rad/sec	
Acoustic noise		+47 dB above ref	+18 dB above ref		
Mission success probability	> 0.930			>0.995	

Recommended test levels:

(1) Qualification: 150% factor.

(2) Workmanship vibration all units; ± 2 *g*, 20–1500 Hz.

(3) Burn-in, 150 hr: all electronic parts, 120% voltage, 85°C.

safety factor. This margin will also enhance the flexibility of the system to accommodate potential changes in the mission requirements. On the other hand, in an effort to hold costs down, all truly unnecessary environments should be eliminated from the specification. Examples are operation over extreme temperature ranges, instantaneous readiness, pyrotechnic shock if not experienced at the instrument compartment, and tight mass unbalance specifications for zero-*g* operations. This will also minimize potential delays in relaxing unrealistic requirements if it becomes evident the gyro is incapable of passing them, as occurred with Lunar Orbiter for example. The detailed

specifications should reflect the performance needs of the space vehicle, the vehicle environmental profile, and the environmental conditions encountered during storage, shipping, and installation.

4.2 System Design

Within the confines of the system-performance requirements, the gyro-to-system interface has elements of flexibility which permit compromise in both the gyro and the system designs. It should be recognized that the cascading or arbitrary safety margins by various system engineering levels can impose unnecessary demands upon the gyro design. Detailed gyro-to-system interface documentation is recommended as a check against such occurrences and to assure realism in both gyro design goals and gyro test program requirements.

4.2.1 Platform vs Strapdown Configuration

The choice of a platform vs a strapdown configuration for a particular application should be the result of a careful tradeoff of the advantages of each in the light of the mission requirements. A comparison of a number of performance limitations of strapdown and platform systems is contained in reference 26.

Strapdown systems are generally favored for orbital and long-range space applications because of the limited angular rates imposed. Boosters and space vehicles generally have maximum rate values below 4 deg/sec, whereas sounding rockets and entry vehicles may have roll rates of one or two orders of magnitude larger. Sounding rockets are usually spin-stabilized during powered flight at 1 to 3 revolutions per second. If measured by a strapdown system, the accumulated roll angle will result in a large error, since the dominant measurement error propagates as a function of the total input angle. Single-axis platforms should be considered to isolate the gyros from these high roll rates.

Strapdown sensors present maximum angular rate limitations which are not encountered by platform systems. The strapdown system is limited by the maximum capability of the electromagnetic torquer and by the dynamic range desired. The platform can typically accept input rates of up to 4,000 deg/sec and is not subject to abort rate dumping as a strapdown system might be. Although the space vehicle may normally have maximum rates of around 4 deg/sec, abort situation rates may easily exceed 30 deg/sec; a strapdown system for a manned vehicle would require protection against such rates. Strapdown systems provide lower cost, fewer parts (i.e., higher reliability), and weight and power reductions; their major limitations are high torquing-rate requirements, large dynamic range, kinematic rectification effects, and scale factor uncertainties.

4.2.2 Alignment and Calibration

The mounting bracket in the space vehicle should be prealigned to obtain the desired relationship between design alignment surfaces and vehicle axes. Particular attention should be provided to the

strapdown gyro alignment to the vehicle and to other gyro and accelerometer axes. The mechanical bracketry that provides this should permit smooth and stable adjustments when aligning the gyro IA to the bracket. It should also clamp reproducibly to the alignment surfaces on the strapdown system package. An IA indexing scheme with a limited adjustment range is recommended to preclude 180 -IA positioning errors.

Preflight alignment of the stable element of a platform IMU or determination of the initial orientation of a strapdown IMU is a standard procedure programmed into the computer and carried out with the vehicle at rest. The system axes are erected to the local vertical and aligned with true north by gyrocompassing or to a predetermined optical reference directly. Vibration or sway of the vehicle may complicate the process, but modern control techniques have made fast alignment possible even in severe environments. Normally 5 to 25 min are required for gyrocompassing. Practical computation procedures for ground-based and inflight correction of the vehicle attitude parameters are presented in reference 84.

Inflight calibration and alignment will require auxiliary sensors, such as horizon seekers, sun sensors, or star trackers, and/or the use of ground-based optical ranging or radar equipment. The mechanization to update the calibration and alignment coefficients must include algorithms for computing the new values and means for inserting them into the computer or other system memory units.

4.2.3 Signal Processing

Digital output format is used predominantly for strapdown gyros in current space applications for guidance, navigation, and other precise modes (ref. 27). Even low-accuracy stabilization or rate damping gyros used in autopilots and vehicle control loops, which have traditionally been analog, have more recently been digitally formulated. There is a trend in this direction in line with current efforts in the development of all-digital autopilots.

For precision space guidance and navigation, digital loops have typical quantization values of the order of arc seconds or smaller. The maximum clock frequency and switching frequency must be sufficiently high to provide for the maximum expected vehicle rates. Typical switching frequencies are from 50 to 100 kHz.

Platform gyros almost universally have an analog output format which is used in the gimbal servo loops. Special hybrid platform/strapdown units have been designed for spin-stabilized vehicles in which the analog format is digitized for transmission and computational purposes when the gimbal motion is locked. When spin stabilization is completed and the vehicle brought to a nominally zero rotational rate, the gimbal is locked and the digital output format used.

4.3 Gyro Selection

The gyro selection process is an iterative tradeoff procedure involving a hierarchy of competitive alternatives and previous decisions. Current and detailed information needed by the systems

engineer concerning the elements he is trying to specify should be provided by the gyro subsystems engineer as early as possible. The gyro subsystems engineer should also review the intended system application to be able to suggest alternatives to the systems engineer.

Ideally, the general process of selecting a gyro for a particular application should be pursued through the decision sequence shown in figure 24. Given the functional gyro requirements for the mission, the first step of the gyro customer should be to define and document carefully the detailed gyro performance requirements via technical development specifications. Gyro prices should be obtained for all competing designs, based on the quantities actually needed plus all services, data, quality assurance, inspections, and program and design review meetings as will be realistically required on the program. This should permit early selection of the best available basic gyro design and preclude unexpected price increases later in the program.

In the early phases of a design, a number of available gyros might fit the mission requirements. However, once a gyro model is chosen, many unique and complex interface details (including electrical impedances, outline, weight, connectors, heat sink, and mounting arrangements) are irrevocably frozen from the system designer's viewpoint. Consequently, the selection of a new gyro at a later stage should be avoided, since this will nearly always result in a higher price and uncertain reliability. However, to lessen the potential cost of switching gyro types, the initial design studies should consider the possibility of such an occurrence.

The gyro characteristics should be completely evaluated, early in the program, by a thorough evaluation test program at the gyro and system levels. Rigid process, configuration, and test controls should be implemented once the gyro design is released. Adherence to these practices will greatly enhance the probability of confidently meeting system design requirements for the gyro.

Owing to the critical nature of the gyros and the small quantity generally procured for a space application, the cost of data, quality control, and services is frequently several times that of the hardware itself. The customer should not be forced to accept an inferior gyro by having to choose the lowest bidder in a final procurement cycle, since the lowest hardware cost will not always yield the least expensive overall program.

4.3.1 Gyro Selection Tradeoffs

Many design elements within the gyro are subject to choice and emphasis. Each tradeoff usually involves a penalty in terms of size, weight, power consumption, dollar cost and possibly reliability. Table 9 lists some of the major tradeoffs by penalty incurred and gyro parameter affected versus the desired quantity.

A much-debated tradeoff which frequently recurs on new gyro applications is the choice of ball vs gas spin bearings. The following considerations are presented to illustrate gyro tradeoffs in general, and specifically to provide suggestions for spin bearing selection.

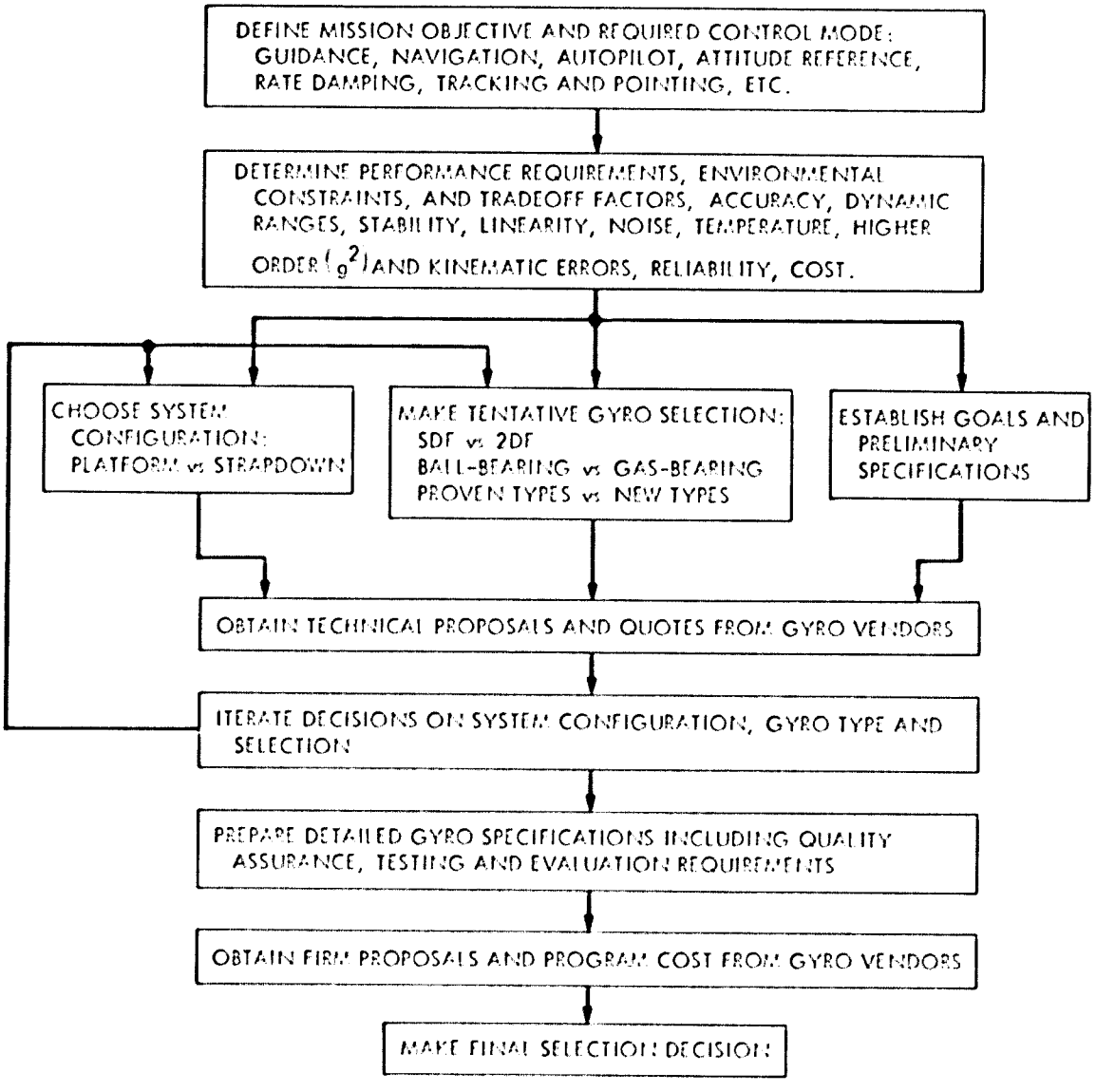

Figure 24.–Gyro selection process.

If a specific gyro is under consideration, the performance history of its existing spin motor bearings should be evaluated using the specification as a criterion. Only if there is reason to change should the bearings be replaced. When equivalent designs are available, a gas spin bearing gyro will tend to exhibit less high-frequency noise and will not be as likely to exhibit narrow-band noise due to ball race imperfections and lubricant migration. However, if sufficient averaging time is available, a numerical filter can be used with ball bearing gyros to reduce the narrow-band error variance by $1/(\text{time})^{1/2}$.

When considering a gas spin bearing, the system engineer should carefully investigate the available starting torque. It is suggested that the initial spin motor torque available be approximately

TABLE 9.—Major Gyro Tradeoffs

Desired Quantity	Gyro Parameter Affected	Penalty Incurred[a]
High performance (low drift uncertainty)	Angular momentum	Size, weight, wheel power, low torquing range
	Magnetic shielding	Size, handling care
	Thermal control	Size, power, electronic controller, possible electrical noise
	Low torque suspension	Size and power (for active suspensions), flotation
Low noise	Wheel bearings, pickoff characteristics, electrical shielding	High signal-to-noise design, design cost and/or choice limited to matured design
Low heater power (for given swing in heat sink)	Mounting and insulation, gyro materials thermal match	High operating temperature (decreased reliability and life), if unheated, compensation networks are penalty
High torquing range (e.g., strapdown)	Angular momentum, torquer size including magnet dynamic range capability	High power, size, weight, intermittent heating of gyro, possible reduced performance at low torquing end of range
Long life	Wheel bearings, hermetic seals, materials	Possible reduced testing allowance prelaunch, choice of proven gyros limited, low operating temperature
High reliability	All parameters	Choice of proven gyros limited
Precision alignment	Gyro mount suspension, thermal paths, gyro material, stability	Mount and alignment time

[a]In addition to cost.

twice that required to start the gyro to allow for an increase in required starting torque during the life of the gyro. This will normally result from migration or gradual lubricity change of the boundary lubricant with time, the condensation of volatiles in the gas spin bearing and, in the case of a ceramic or ceramic-coated bearing, the presence of particulates. A zero-g environment provides a significant additional margin since considerably less starting torque is required (ref. 85).

In the case of the ball bearing, the difference between starting and running torque is considerably less; however, margin must be available here also to provide for an increase in average and peak running torque with time, due primarily to lubricity changes and increased ball-retainer friction. Both types of bearings exhibit compliances leading to g^2 errors. However, the gas spin bearing is normally not as stiff as a preloaded ball bearing, and hence the magnitude of the g^2 (and higher order) nonlinearities is likely to be greater than for a ball-bearing instrument of similar design. All gas spin bearings exhibit the phenomenon of a load capability reduction at half rotor speed frequencies. The use of "antiwhirl" pockets in cylindrical gas bearing designs significantly improves this minimum capability (ref. 86).

4.3.2 Compatibility With Performance Requirements

Determining the compatibility of gyro performance to system and mission requirements is a process which should be continuous from the preliminary study phase onward. The recommended practice involves comprehensive liaison with the gyro vendor by visits or residence for the following:

(1) Precontract Phase

- Vendor survey
- Preliminary specification review
- Proposal review — fact finding

(2) Control Phase

- Preliminary design review
- Progress report meetings
- Critical design review
- First article acceptance
- Qualification testing
- Special test equipment acceptance
- Performance data reviews
- Field support
- Failure analysis reviews
- Reliability reviews
- Summary project review.

The critical time of gyro selection and program success is primarily determined by the precontract phase and early contract phase.

4.3.3 Component Specifications

Principal responsibility for certain gyro specifications belongs to the systems engineer. Among these are allowable performance tolerances, cost, size, weight, power and environmental constraints. The gyro engineer should be aware of all impacts of possible detailed specification changes. A suggested approach is for the systems designer to identify "primary" and "secondary" parameters, along with a third priority level of "desired features" in his gyro specifications. This procedure will aid the gyro engineer in making the gyro selection and application more cost-effective. If these priorities are not well-established, the systems and gyro engineers should deter-

mine through direct discussion the importance of each gyro parameter. This process is often enhanced by a project engineer who is familiar with both the systems and component requirements.

The gyro vendor proposals should include qualification test proposals, shelf-life and running life data, and MTBF and other parametric values from specific experience and production history. A number of indicators of a gyro manufacturer's ability to perform are available and should be evidenced. These include:

(1) A history of good performance on similar space programs, along with verified results which were attained in the field by the hardware previously produced

(2) Indication of management, organization, and manufacturing capability willing and flexible enough to be responsive to a small quantity order for very high quality, heavily documented instruments

(3) A capable and experienced person designated and empowered to accept the full range of program management responsibility and with the authority to manage the program

(4) Evidence that the quality assurance and reliability groups are recognized in the organization and have demonstrated competence in surveillance and monitoring of a space application instrument program.

Two guides are recommended for preparation of the detailed component specification:

(1) MIL-STD-143A (ref. 87)

(2) IEEE Standard 292 (ref. 10).

These documents are well-founded on experience and are widely accepted throughout the industry. They provide an outline of topic paragraphs which should obviate any serious omissions and which should promote familiarity by both author and reader with the specification sequence.

4.4 Reliability

Reliability should be one of the foremost concerns of the gyro designer or user. It is recommended that gyros be selected from an operating production line fabricating units of the quality class required. Any change from a previously approved article in the gyro package or a manufacturing process should be treated with extreme caution. For example, even damping fluid change can cause major yield problems.

Traceability requirements on all gyros should be established to preclude voids in gyro history during testing and handling. The importance of these requirements increases with program size; oversights can result in acceptance of marginal gyros as well as in rejection of good gyros. Failure analysis of all faulty gyros should be conducted to determine the mechanisms that precipitated the failures. A statistical evaluation of the analysis findings should be used to establish more

quantitative specifications for identifying the onset of failure and to revise estimates of the remaining useful life of gyros still in service.

If budget and schedule permit, it is recommended that several spare gyros be procured. Benefits that can result from this practice include:

(1) Selective choices of "blue ribbon" instruments can provide increased probability of mission success.

(2) A number of gyros will be available for life-testing purposes at the gyro facility. These units can be exposed to all environments which can or will be experienced by flight units.

(3) Failures or degradation indications in life test units will allow for complete teardown analysis and failure mode identification.

(4) Failed units can be rebuilt with design improvements incorporated, often at lower cost.

(5) The gyroscope manufacturer and user will have available complete reliability data to provide assurance that the gyro can meet system demands.

The effects of storage on gyro reliability should not be ignored. The following storage conditions can affect the drift performance of a gyro and should be carefully specified:

Temperature extremes
Instrument attitude
Applied excitations (i.e., suspensions might be operative)
Length of storage time.

It is recommended that gyros be operated periodically while in storage. If inertial parameter changes occur after nonoperating periods, further operation of the gyro prior to rechecking characteristics may be advisable. Storage-induced shifts in drift level and stability should be considered in the test routines set up for the system and in the evaluation of gyro operation in the system environment.

The following reliability-related practices are recommended as the result of experience to preclude problems in future programs:

(1) The gyro exterior should be protected from possible deterioration sources, including gaseous environments, salt spray, humidity, and similar sources.

(2) The gyro connectors should be protected by attaching "stub" connector mates at the earliest feasible time and removing the tooling connectors only for assembly to the system.

(3) Safeguards should be imposed to protect the gyro from electrical parameters or coefficient changes through careless use of ohmmeters, spin motor phasing, etc.

(4) The use of polarized connectors with male pins on the gyro is suggested to protect system electronics.

(5) The system designer should be cognizant of hazardous gyro excitation levels. His electronic design reviews should include checks to verify that electronic failure will not catastrophically affect the gyro.

(6) Electrical monitors of the gyro should not impair gyro performance or require circuit breaking and making procedures in the system.

(7) Systematic gyro drift induced by cable-resistance changes (associated with wheel, suspension, torquer and pickoff drives) due to temperature cycling should be reduced to acceptable levels by use of large conductor sizes, multiple conductors, or techniques which include the cables in the power-supply feedback loops.

The advantages and drawbacks of gyro redundancy should be carefully evaluated for each application. Factors which should be considered include increased system power requirements for operating spares, potential startup problems of unpowered spares, switching mechanisms for gyro outputs and power inputs, implementation of failure detection and isolation algorithms, and increased weight and volume. The number of redundant gyros required depends on the specified probability of mission success, the MTBF of the individual gyros, and the redundancy configuration applied. A skewed configuration should be considered in which each gyro measures a vector contribution from each vehicle axis, together with a means of resolving these vectors and comparing them. The reliability of several such configurations has been compared in figure 9, Section 2.5.2.

4.5 Testing and Evaluation

The gyro performance should be frequently tested, monitored, and evaluated during the entire sequence from fabrication through flight. Prior to flight, it should be measured not only in the laboratory environment but also in as close a simulation as can be obtained of the actual system and vehicle environments. Failure to do this can result in costly modifications to the components themselves or to the inertial platform or strapdown package and electronics circuits later in the program. Consistent test results demand extreme thoroughness in specifying adequate controls over switching, on-off control, well-defined initializing procedures, and gyro-data accumulation.

4.5.1 Test Planning — Specifications

The testing program should be designed to provide assurance that the gyroscope component or system package complies with the detailed specifications and to examine its performance under the specified environmental conditions and with elapsed time. It should be noted that the system package or the gyro is not necessarily subjected to the vehicle amplitudes of vibration, shock, thermal conditions, or pressures because of the enclosure and mounting. To prevent unnecessarily severe inputs, the gyro or system test requirements should reflect the actual requirements expected at system or component interface.

Prior to the writing of specifications, a performance budget should be established, allotting maximum errors at the gyro component interface and at the system mount and output interface.

Simultaneously, environmental conditions should be specified for each of these two interfaces. The error budget and assigned environmental conditions should be as realistic as possible, without undue factor of safety allowances.

Separate test specifications then should be prepared for the system package and for the gyroscope component, each reflecting the performance errors allowable and its assigned environmental conditions. The tests should be specified completely, including equipment, test content and sequence, test positions, conditions, times and model reduction equations. Sample specification formats and test procedures may be found in references 11 and 75. The use of *Standard Gyro Terminology* (ref. 5) is recommended to avoid unfamiliar definitions. It is important that the writer be well-versed in details of gyro construction and performance parameters. He should also have a practical working knowledge of testing limitations to be able to present applicable and attainable testing specifications and also to prevent ambiguous or conflicting specifications. Limitations on the calibration of precision gyros due to drifts and oscillations of the test platform are discussed in reference 88. Further information on gyro testing methods and limitations may be found in references 4, 34, 89, 90, and 91.

4.5.2 Component Tests

The most important recommended component testing practice (including acceptance test, environmental test, or special engineering tests) is that the electronics, mechanical, and thermal mounting should duplicate the system interfaces as closely as possible. Suggested procedures include the use of holding fixtures that are adapted from the system IMU, production system electronics, and heat sinks that are mechanized in the same way as the system's cooling scheme. Generally, the precise test content will be different for each application. Gyro fixturing and thermal-environment stability should be consistent with required test times and accuracy. Because of practical limitations, certain gyro tests may be performed with the gyro nonoperating and performance checked before and after the specific environmental tests. Gyro test monitors should be nondisturbing by design, and test personnel should be trained to minimize gyro disturbances resulting from carelessness or ignorance (e.g., to cause float motion against a mechanical stop).

Repeated temperature cycling of a gyro prior to acceptance testing, through a range representative of the expected life, is recommended to speed up aging and to improve drift stability. At acceptance testing the gyro should be configured as nearly like the system-ready gyro as is practicable. The acceptance test itself should be based upon a necessary-and-sufficient philosophy consistent with the end-item use of the gyro and should be limited to verifying gyro integrity. The use of prototype test data should be considered when designing the acceptance test (ref. 92).

4.5.3 Subsystem Tests

Subsystem tests of the gyro package should be conducted using as much of the system flight electronics as possible. Completion of qualification tests and engineering evaluation tests early in

the program is recommended. In addition, qualification tests should provide a reasonable match with realistic system requirements.

Whenever possible, the nominal conditions at the component, subsystem, and system test levels should be identical. The relaxation of performance requirements from the gyro test level through the various system-integration stages can be determined by experience or by analysis. A frequent cause for concern is the variation in performance of the gyro package from the test stand to the system caused by differing thermal conditions at each location. If the program includes a large number of gyros and more than one manufacturer, the effort necessary to provide reasonably identical equipment and testing conditions in all locations is justified. Test electronics should employ system designs to the greatest extent possible (electronics meeting system specifications is an alternate solution), and gyro-excitation sequencing should conform to system sequencing consistent with test requirements.

4.5.4 System Tests

The system acceptance and spacecraft integration tests should provide the same critical parameters of gyro performance as obtained in components and subsystem tests. This continues the trend information on the stability of these coefficients, which is vital to predicting the system flight performance. Careful preplanning and coordination of test procedures, data control, and management are essential to the success of this activity. Computerized test systems (e.g., ref. 93) are recommended to minimize the possibility of operator errors and to facilitate handling of test data. Insofar as is practical the system tests should duplicate the spacecraft connections, mounting, thermal conditions, and power supply characteristics, so that:

(1) Gyroscope system tests outside of the spacecraft give valid indications of performance when installed in the vehicle

(2) Connection of the gyroscope system to the spacecraft does not short or damage either the gyroscope system or the other elements within the spacecraft

(3) Gyroscope parameter monitoring is possible both in and out of the spacecraft.

Since the gyroscope system tests cannot be implemented without correlation with spacecraft conditions, exchanges of this type of information are required early in the program.

4.5.5 Test Data Evaluation

The basic requirements for accurate evaluation of gyro test data are the following:

(1) The critical performance parameters should be defined.

(2) The gyro component and system specifications should be indicative of the critical performance specifications.

(3) The component and system test procedures and requirements should be in accordance with their relative specifications.

(4) The resulting test (or test-derived) data should indicate the values of the critical performance parameters when reflected back to the gyro component or the system interface.

Depending upon budget and schedule constraints, all test data, from component tests on, should be collected to provide continuous histories of the critical performance parameters for each gyro. The trends and stability of these performance coefficients should then be correlated with gyro failures and environment data to establish indicators of incipient degradation and to permit projections of future changes.

High-speed computer installations provide an ideal tool for gyro data reduction, compilation and presentation and should be considered on all programs. The utilization of computerized data processing requires program coordination from the beginning. However, the establishment of test data banks which can be readily processed is a powerful aid in evaluation of gyro performance and reliability trends and should not be overlooked.

4.5.6 Prelaunch Checkout and Flight Monitoring

The systems engineer should establish the criteria for prelaunch checkout with the advice and consultation of the gyro engineer. Any space application design review should include a requirement for a detailed prelaunch test procedure. This document should define:

(1) Checkout procedures for gyro subsystem at launch site (go/no-go)

(2) Failure detection procedures for monitoring during mission.

In any case, all measured parameters should be compared to previous data taken. In the event that a shift in any parameter is observed, the unit being tested should be considered suspect and a go/no-go decision should be based on data trends and accumulated history.

The possible reduction in system reliability due to the monitoring circuitry should be carefully evaluated when the monitoring points are being selected. However, a spin motor rotation detector should almost be considered mandatory. Consideration should also be given to monitoring the torquer current and pickoff outputs. A checkout procedure should be provided so that a test current can be fed to the torquer and the resultant error signal from the pickoff observed. The gyro system engineer should evaluate the cost and complexity of establishing additional monitoring points and comparison circuitry against the requirements for his application.

REFERENCES

1. Savet, P. H.: Gyroscopes, Theory and Design. McGraw-Hill, New York, 1961.
2. Slater, J. M.: Inertial Guidance Sensors. Van Nostrand Reinhold, New York, 1964.
3. Taylor, E. D.; and Way, R. L.: Gyroscope Fundamentals. A. C. Electronics (GMC) Report.
4. Wrigley, W.; Hollister, W. M.; and Denhard, W G.: Gyroscope Theory, Design and Instrumentation. MIT Press, Cambridge, Mass., 1969.
5. Anon.: Standard Gyro Terminology. EETC Report No. 5 (Revision A), Aerospace Industries Association, Washington, D.C., June 1965.
6. Broxmeyer, C.: Inertial Navigation Systems. McGraw-Hill, New York, 1964.
7. O'Donnell, C. F., ed.: Inertial Navigation Analysis and Design. McGraw-Hill, New York, 1964.
8. Pitman, G. R., Jr., ed.: Inertial Guidance. John Wiley & Sons, New York, 1962.
9. Miller, J. E., ed.: Space Navigation Guidance and Control. AGARDograph-105, Technivision Ltd. (Maidenhead, Eng.) 1966.
10. Anon.: IEEE Specification Format for Single-Degree-of-Freedom Spring-Restrained Rate Gyros. IEEE No. 292, The Institute of Electrical and Electronics Engineers, July 1969.
11. Anon.: IEEE Test Procedures for Single-Degree-of-Freedom Spring-Restrained Rate Gyros. IEEE No. 293, The Institute of Electrical and Electronics Engineers, July 1969.
12. Lange, B.: The Unsupported Gyroscope. Presented at the Unconventional Inertial Sensors Symposium, New York, November 1964.
13. Ferry, E. S.: Applied Gyrodynamics. John Wiley & Sons, 1932.
14. Rawlings, A. L.: The Theory of the Gyroscopic Compass and Its Deviations. 2nd ed., Macmillan, New York, 1944.
15. Anon.: A Brief History of Inertial Guidance. George C. Marshall Space Flight Center, Huntsville, Ala., 1961.
16. Nordsieck, A.: Principles of Electric Vacuum Gyroscopes. Progress in Astronautics and Rocketry, vol. 8 (Guidance and Control), R. E. Roberson and J. S. Farrior, eds. Academic Press, New York, 1962, p. 435.
17. Buchhold, T. A.: Superconductive Gyros. Gyrodynamics, H. Ziegler, ed. Springer, Berlin, 1963, pp. 193–200.
18. Parkinson, B. W.; and Lange, B.: Active Damping of Free-Rotor Gyroscopes During Initial Spin-Up J. of Spacecraft and Rockets, vol. 7, no. 6, June 1970, pp. 667–675.
19. Parkinson, B. W.; and Lange, B.: Experimental Studies of the Active Damping of Free-Rotor Gyroscopes. J. of Spacecraft and Rockets, vol. 7, no. 6, June 1970, pp. 675–684.
20. Howe, E. W.; and Savet, P. H.: The Dynamically Tuned Free Rotor Gyro. Control Engineering, vol. II, no. 6, June 1964, pp. 68–72.
21. Cimera, R. F.; and Napolitano, M.: The Gyroflex Gyroscope. Paper Presented at AGARD Inertial Navigation Symposium, Braunshweig, Germany, May 7–9, 1968.

22. Anon.: The Mod II Gyroflex Gyro. Technical Publication GTO-1746D, Kearfott Division, Singer-General Precision, Inc., Little Falls, N. J., April 30, 1971.

23. Gilmore, J. P.; and McKern, R. A.: Strapdown Inertial Attitude—Indication Evaluations. J. of Spacecraft and Rockets, vol. 7, no. 7, July 1970, pp. 825–831.

24. Gilmore, J. P.; and Feldman, J.: Gyroscope in Torque-to-Balance Strapdown Application. J. of Spacecraft and Rockets, vol. 7, no. 9, Sept. 1970, pp. 1076–1082.

25. Hitt, E. F.; and Koenke, E. J.: Evaluation of Strapdown Guidance Systems on Interplanetary Missions. J. of Spacecraft and Rockets, vol. 6, no. 5, May 1969, pp. 623–626.

26. Scoville, A. E.: A Comparison of Strapdown and Platform Inertial System Performance Limitations. Proceedings of the ION National Space Meeting on Simplified Manned Guidance, Navigation and Control, February 19–21, 1968.

27. Gelb, A.; and Sutherland, A. A., Jr.: Design of Strapdown Gyroscopes for a Dynamic Environment. Tr-101-1, The Analytical Sciences Corporation, Reading, Mass., July 1967.

28. Farrell, J. L.: Performance of Strapdown Inertial Attitude Reference Systems. J. of Spacecraft and Rockets, vol. 3, no. 9, Sept. 1966, pp. 1340–1347.

29. Wennerholm, R., Jr.: A Strapdown Attitude Reference for Space Vehicles. AIAA/JACC Guidance and Control Conference, Seattle, Wash., August 15–17, 1966.

30. Haagens, R. G.: Intermediate Accuracy Integrating Gyroscopes. Arthur D. Little, Inc., Cambridge, Mass., June 1970.

31. Kaiser, K.: Precision Temperature Control As Applied to Floated Gyroscopes. E-1971, MIT Instrumentation Laboratory, Cambridge, Mass., June 1965.

32. Kaiser, K.: Temperature Control of the Inertial-Grade Floated Rate-Integrating Gyroscope. IEEE Transactions on Automatic Control, vol. AC-15, no. 5, Oct. 1970, pp. 521–529.

33. LeBlanc, R. L.: Thermal Control: Inertial Components and Systems. System Design, November 1966.

34. Weinstock, H.: The Effects of Vibration on Gyroscope Measurements. E-1399, MIT Instrumentation Laboratory, Cambridge, Mass., Aug. 1963.

35. Palmer, P. J.: Gyro Torque Coefficients. E-1601, MIT Draper Laboratory, Cambridge, Mass., Jan. 1966.

36. Sargent, D.; and Zarett, H.: The Critical Dynamic Errors of a Strapdown Guidance System. Journal of Spacecraft and Rockets, vol. 8, no. 12, Dec. 1971, pp. 1208–1215.

37. Denhard, W. G., ed.: Inertial Component Testing: Philosophy and Methods. AGARDograph-128, Technivision, Braywick House, Maidenhead, England, 1970.

38. Wilkinson, R. H.: A Deterministic Steady-State Error Model for the Floated Inertial Gyroscope. J. of Spacecraft and Rockets, vol. 8, no. 4, Apr. 1971, pp. 399–403.

39. Price, C. F.: Minimum Variance Estimates of Gyroscopic Drift Parameters. J. of Spacecraft and Rockets, vol. 5, no. 6, June 1968, pp. 747–749.

40. Gryna, F. M., Jr.; et al. ed.: Reliability Training Text. The Institute of Radio Engineers, Inc., New York, Mar. 1960.

41. Evans, F. A.; and Wilcox, J. C.: Experimental Strapdown Redundant Sensor Inertial Navigation System. J. of Spacecraft and Rockets, vol. 7, no. 9, Sept. 1970, pp. 1070–1074.

42. Weiss, R.; and Nathan, I.: An Ultrareliable Sensing System for Vehicles with Limited Sparing Capability. J. of Spacecraft and Rockets, vol. 4, no. 9, Sept. 1967, pp. 1151–1158.

43. Gilmore, J. P.; and McKern, R. A.: A Redundant Strapdown Inertial System Mechanization—SIRU. AIAA Paper No. 70-1027, AIAA Guidance, Control and Flight Mechanics Conference, Santa Barbara, Calif., Aug. 17–19, 1971.

44. Pejsa, A. J.: Optimum Orientation and Accuracy of Redundant Sensor Arrays. AIAA Paper No. 71–59, AIAA 9th Aerospace Sciences Meeting, New York, Jan. 25–27, 1971.

45. Bejczy, A. K.: Non-Orthogonal Redundant Configurations of Single-Axis Strapped-Down Gyros. JPL Quarterly Technical Review, vol. 1, no. 2, July 1971, pp. 107–118.

46. Anon.: Centaur in Retrospect. NASA CR-86040, Honeywell Aerospace Division, Minneapolis, Minn., Jan. 1968.

47. Cobourn, J. D.; et al: Reliability Design Review—Scout Guidance System. Report No. 23.298, LTV Astronautics Division, Dec. 21, 1966.

48. Hurt, J. B.: Little Joe II Test Launch Vehicle, NASA Project Apollo; Final Report. GDC-66-042, General Dynamics, Convair Div., San Diego, Calif., May 1966.

49. McGreur, B. L.: Flight Dynamics and Control Analyses of the SLV-3A Launch Vehicle. GDC-BTD67-052, General Dynamics, Convair Division, San Diego, Calif., Jan. 1968.

50. Thomason, H. E.: A General Description of the ST124-M Inertial Platform System. NASA TN D-2938, Sept. 1965.

51. Anon.: Saturn Instrument Unit: Attitude Control System Description/Data Manual. IBM Space Systems Center, Huntsville, Ala., Oct. 10, 1967.

52. Anon.: Project Mercury Familiarization Manual. SEDR 104, McDonnell Aircraft Co., St. Louis, Mo., Dec. 1, 1962.

53. Anon.: Gemini Final Summary Report. F169, McDonnell Aircraft Co., St. Louis, Mo., Feb. 20, 1967.

54. Anon.: Mercury/Gemini Program Design Survey. NASA CR-86041, McDonnell Douglas Astronautics Co., Huntington Beach, Calif., Jan. 1968.

55. Miller, J. E.; and Feldman, J.: Gyro Reliability in the Apollo Guidance, Navigation and Control System. J. of Spacecraft and Rockets, vol. 5, no. 6, June 1968, pp. 638–643.

56. Miller, J. E.; and Loats, A.: Apollo Guidance and Control System Flight Experience. J. of Spacecraft and Rockets, vol. 7, no. 5, May 1970, pp. 551–557.

57. Stameris, W. A.: Design Survey of the Apollo Inertial Subsystem. E-2500, MIT Charles Stark Draper Laboratory, Cambridge, Mass., Mar. 1970.

58. Anon.: Lunar Module/Abort Guidance System (LM/AGS) Design Survey. Report 06414-6008-T-000, TRW Systems Group, Sept. 1968.

59. Anon.: Apollo Command and Service Module Stabilization and Control System Design Survey. SD 68-869, North American Rockwell, Dec. 20, 1968.

60. Anon.: Lunar Orbiter Program—Guidance and Control System Design Survey. D2-114277-3, The Boeing Company, Seattle, Wash., May 9, 1969.

61. Kopf, E. H.: A Mariner Orbiter Autopilot Design. Technical Report 32-1349, Jet Propulsion Laboratory, Pasadena, Calif., Jan. 15, 1969.

62. Edmunds, R. S.: Introduction to the Mariner 71 A/C. Engineering Memorandum 344-299-RSE, Jet Propulsion Laboratory, Pasadena, Calif., Dec. 29, 1970.

63. Edmunds, R. S.: M'71 IRU Description. Engineering Memorandum 344-318-RSE, Jet Propulsion Laboratory, Pasadena, Calif., Feb. 22, 1971.

64. McKenna, K. J.; and Schmeichel, H.: Orbiting Geophysical Observatory Attitude Control Subsystem Design Survey. Contract NAS 12-110, TRW Systems Group, Redondo Beach, Calif., June 1968.

65. Chubb, W. B.; Schultz, D. N.; and Seltzer, S. M.: Attitude Control and Precision Pointing of Apollo Telescope Mount. J. of Spacecraft and Rockets, vol. 5, no. 8, Aug. 1968, pp. 896–903.

66. Anon.: Guidance and Navigation for Entry Vehicles. NASA SP-8015, Nov. 1968.

67. Anon.: Entry Vehicle Control. NASA SP-8028, Nov. 1969.

68. Burke, M. E.: X-15 Analog and Digital Inertial Systems Flight Experience. NASA TN D-4642, July 1968.

69. Fischel, J.; and Webb, L. D.: Flight-Information Sensors, Display and Space Control of the X-15 Airplane for Atmospheric and Near-Space Flight Missions. NASA TN D-2407, Aug. 1964.

70. Kotfila, R. P.; and Painter, W. D.: Design, Development and Flight Test Experience with Lifting Body Stability Augmentation Systems. Paper No. 69-887, AIAA Guidance, Control and Flight Mechanics Conference, Princeton Univ., Princeton, N. J., Aug. 1969.

71. Bartlett, H. E.; Dean, J. W.; and Owen, A. H.: ASSET-Systems Description and Evaluation. AFFDL-TR-65-31, Vol. II, Apr. 1966.

72. Anon.: Proceedings of ASSET/Advanced Lifting Reentry Technology Symposium. AFFDL-TR-66-22, Dec. 1965.

73. Meier, J. W.; and Jenkins, C. A.: Attitude Control Systems for Sounding Rockets. AIAA Paper 70-1405, AIAA 2nd Sounding Rocket Technology Conference, Williamsburg, Va., Dec. 7–9, 1970.

74. Greeb, M. E.; and Shrewsberry, D. J.: Stellar Tracking Rocket Attitude Positioning (STRAP) System. AIAA Paper No. 70-1402, AIAA 2nd Sounding Rocket Technology Conference, Williamsburg, Va., Dec. 7–9, 1970.

75. Booth, R.; and Harlow, R. R., ed.: Inertial Gyroscope System Application Considerations. R-645, MIT Instrumentation Laboratory, Cambridge, Mass., Aug. 1969.

76. Anon.: Military Standard: Environmental Test Methods. MIL-STD-810B, Department of Defense (available from Naval Publications and Forms Center, Code 105, 5801 Tabor Ave., Philadelphia, Pa. 19120), June 15, 1967 (change 4 dated Sept. 21, 1970).

77. Denhard, W.; Draper, C. S.; and Hall, E.: Effects of Zero-G Conditions on Gyro Unit Operation. Presented at the Second Symposium on Physical and Biological Phenomena Under Zero-G Conditions, American Astronautical Society, Jan. 1963.

78. Gerenz, R. F.: Gyroscope Performance Prediction by Multiple Discriminant Analysis. T-415, MIT Instrumentation Laboratory, Cambridge, Mass., June 1965.

79. Cooper, R.; and Feldman, J.: Inertial Components Reliability and Population Statistics. E-2252, MIT Instrumentation Laboratory, Cambridge, Mass., Mar. 1968.

80. Feldman, J.; and Miller, J.: Apollo Guidance, Navigation and Control System Gyro Reliability. E-2141, MIT Instrumentation Laboratory, Cambridge, Mass., June 1967.

81. Slater, J.: Gyro Types. T7-2442/201, Autonetics Division, North American Rockwell Corp., Anaheim, Calif., Nov. 1967.

82. Decher, R.: Gyroscope Relativity Experiment. NASA TMX-64630, Oct. 18, 1971.

83. Miller, B.: Inertial Navaid Features New Multisensors. Aviation Week and Space Technology, vol. 95, no. 24, Dec. 13, 1971, pp. 44–46.

84. Thompson, E. H.; Farrell, J. L.; and Knight, J. W.: Alignment Methods for Strapdown Inertial Systems. J. of Spacecraft and Rockets, vol. 3, no. 9, Sept 1966, pp.1432–1434.

85. Drew, T. A.: Zero-G Flight Test of a Spherical Gas Bearing. C8-2268/201, Autonetics Division, North American Rockwell Corp., Anaheim, Calif., Oct. 25, 1968.

86. Zedekar, S. L.: Higher Order Acceleration Effects on a Free Rotor Gyroscope. C71-143/201, Autonetics Division, North American Rockwell Corp., Anaheim, Calif., Feb. 9, 1971.

87. Anon.: Military Standard: Military Specifications. MIL-STD-143A, Department of Defense (available from Naval Publications and Forms Center, Code 105, 5801 Tabor Ave., Philadelphia, Pa. 19120).

88. Weinstock, H.: Limitations on Inertial Sensor Testing Produced by Test Platform Vibrations. NASA TN-D-3683, Nov. 1966.

89. Anon.: Notes on Apollo IRIG and PIPA Test Procedures. E-837, Dynamics Research Corp., Stoneham, Mass., May 1966.

90. Hercules, F.; and Butler, R.: Orbital Testing Requirements for Guidance and Control Devices. Vol. I. NASA CR-355, McDonnell Aircraft Co., St. Louis, Mo., Dec. 1965.

91. Crawford, B. S.: Dynamic Single-Axis Testing of Single-Degree-of-Freedom Strapdown Sensors. Fifth Inertial Guidance Test Symposium.

92. Noonan, F.; Jakimczyk, S. J.; and Sandberg, H. J.: The Design of a Gyro Drift Rate Acceptance Test Based on The Systematic Utilization of Prototype Data. AIAA Paper No. 71-968, AIAA Guidance, Control and Flight Mechanics Conference, Hofstra University, Hempstead, New York, August 16–18, 1971.

93. McNellis, J. F.; Ruland, W. C.; and Woods, D. E.: A Computerized Test System for Strapdown Guidance Systems. AIAA Paper No. 71-967, AIAA Guidance, Control and Flight Mechanics Conference, Hofstra University, Hempstead, New York, August 16–18, 1971.

NASA SPACE VEHICLE DESIGN CRITERIA MONOGRAPHS ISSUED TO DATE

SP-8001 (Structures)	Buffeting During Atmospheric Ascent, revised November 1970
SP-8002 (Structures)	Flight-Loads Measurements During Launch and Exit, December 1964
SP-8003 (Structures)	Flutter, Buzz, and Divergence, July 1964
SP-8004 (Structures)	Panel Flutter, July 1964
SP-8005 (Environment)	Solar Electromagnetic Radiation, revised May 1971
SP-8006 (Structures)	Local Steady Aerodynamic Loads During Launch and Exit, May 1965
SP-8007 (Structures)	Buckling of Thin-Walled Circular Cylinders, revised August 1968
SP-8008 (Structures)	Prelaunch Ground Wind Loads, November 1965
SP-8009 (Structures)	Propellant Slosh Loads, August 1968
SP-8010 (Environment)	Models of Mars Atmosphere (1967), May 1968
SP-8011 (Environment)	Models of Venus Atmosphere (1968), December 1968
SP-8012 (Structures)	Natural Vibration Modal Analysis, September 1968
SP-8013 (Environment)	Meteoroid Environment Model—1969 (Near Earth to Lunar Surface), March 1969
SP-8014 (Structures)	Entry Thermal Protection, August 1968
SP-8015 (Guidance and Control)	Guidance and Navigation for Entry Vehicles, November 1968
SP-8016 (Guidance and Control)	Effects of Structural Flexibility on Spacecraft Control Systems, April 1969
SP-8017 (Environment)	Magnetic Fields—Earth and Extraterrestrial, March 1969
SP-8018 (Guidance and Control)	Spacecraft Magnetic Torques, March 1969
SP-8019 (Structures)	Buckling of Thin-Walled Truncated Cones, September 1968
SP-8020 (Environment)	Mars Surface Models (1968), May 1969
SP-8021 (Environment)	Models of Earth's Atmosphere (120 to 1000 km), May 1969
SP-8022 (Structures)	Staging Loads, February 1969
SP-8023 (Environment)	Lunar Surface Models, May 1969
SP-8024 (Guidance and Control)	Spacecraft Gravitational Torques, May 1969
SP-8025 (Chemical Propulsion)	Solid Rocket Motor Metal Cases, April 1970

SP-8026 (Guidance and Control)	Spacecraft Star Trackers, July 1970
SP-8027 (Guidance and Control)	Spacecraft Radiation Torques, October 1969
SP-8028 (Guidance and Control)	Entry Vehicle Control, November 1969
SP-8029 (Structures)	Aerodynamic and Rocket-Exhaust Heating During Launch and Ascent, May 1969
SP-8030 (Structures)	Transient Loads From Thrust Excitation, February 1969
SP-8031 (Structures)	Slosh Suppression, May 1969
SP-8032 (Structures)	Buckling of Thin-Walled Doubly Curved Shells, August 1969
SP-8033 (Guidance and Control)	Spacecraft Earth Horizon Sensors, December 1969
SP-8034 (Guidance and Control)	Spacecraft Mass Expulsion Torques, December 1969
SP-8035 (Structures)	Wind Loads During Ascent, June 1970
SP-8036 (Guidance and Control)	Effects of Structural Flexibility on Launch Vehicle Control Systems, February 1970
SP-8037 (Environment)	Assessment and Control of Spacecraft Magnetic Fields, September 1970
SP-8038 (Environment)	Meteoroid Environment Model—1970 (Interplanetary and Planetary), October 1970
SP-8039 (Chemical Propulsion)	Solid Rocket Motor Performance Analysis and Prediction, May 1971
SP-8040 (Structures)	Fracture Control of Metallic Pressure Vessels, May 1970
SP-8041 (Chemical Propulsion)	Captive-Fired Testing of Solid Rocket Motors, March 1971
SP-8042 (Structures)	Meteoroid Damage Assessment, May 1970
SP-8043 (Structures)	Design-Development Testing, May 1970
SP-8044 (Structures)	Qualification Testing, May 1970
SP-8045 (Structures)	Acceptance Testing, April 1970
SP-8046 (Structures)	Landing Impact Attenuation for Non-Surface-Planing Landers, April 1970
SP-8047 (Guidance and Control)	Spacecraft Sun Sensors, June 1970
SP-8048 (Chemical Propulsion)	Liquid Rocket Engine Turbopump Bearings, March 1971

SP-8049 (Environment)	The Earth's Ionosphere, March 1971
SP-8050 (Structures)	Structural Vibration Prediction, June 1970
SP-8051 (Chemical Propulsion)	Solid Rocket Motor Igniters, March 1971
SP-8052 (Chemical Propulsion)	Liquid Rocket Engine Turboprop Inducers, May 1971
SP-8053 (Structures)	Nuclear and Space Radiation Effects on Materials, June 1970
SP-8054 (Structures)	Space Radiation Protection, June 1970
SP-8055 (Structures)	Prevention of Coupled Structure-Propulsion Instability (Pogo), October 1970
SP-8056 (Structures)	Flight Separation Mechanisms, October 1970
SP-8057 (Structures)	Structural Design Criteria Applicable to a Space Shuttle, January 1971
SP-8058 (Guidance and Control)	Spacecraft Aerodynamic Torques, January 1971
SP-8059 (Guidance and Control)	Spacecraft Attitude Control During Thrusting Maneuvers, February 1971
SP-8060 (Structures)	Compartment Venting, November 1970
SP-8061 (Structures)	Interaction With Umbilicals and Launch Stand, August 1970
SP-8062 (Structures)	Entry Gasdynamic Heating, January 1971
SP-8063 (Structures)	Lubrication, Friction, and Wear, June 1971
SP-8064 (Chemical Propulsion)	Solid Propellant Selection and Characterization, June 1971
SP-8065 (Guidance and Control)	Tubular Spacecraft Booms (Extendible, Reel Stored), February 1971
SP-8066 (Structures)	Deployable Aerodynamic Deceleration Systems, June 1971
SP-8067 (Environment)	Earth Albedo and Emitted Radiation, July 1971
SP-8068 (Structures)	Buckling Strength of Structural Plates, June 1971
SP-8069 (Environment)	The Planet Jupiter (1970), December 1971
SP-8070 (Guidance and Control)	Spaceborne Digital Computer Systems, March 1971
SP-8071 (Guidance and Control)	Passive Gravity-Gradient Libration Dampers, February 1971
SP-8072 (Structures)	Acoustic Loads Generated by the Propulsion System, June 1971
SP-8074 (Guidance and Control)	Spacecraft Solar Cell Arrays, May 1971
SP-8077 (Structures)	Transportation and Handling Loads, September 1971

SP-8078 (Guidance and Control)	Spaceborne Electronic Imaging Systems, June 1971
SP-8079 (Structures)	Structural Interaction With Control Systems, November 1971
SP-8082 (Structures)	Stress-Corrosion Cracking in Metals, August 1971
SP-8083 (Structures)	Discontinuity Stresses in Metallic Pressure Vessels, November 1971
SP-8084 (Environment)	Surface Atmospheric Extremes (Launch and Transportation Areas), May 1972
SP-8085 (Environment)	The Planet Mercury (1971), March 1972
SP-8086 (Guidance and Control)	Space Vehicle Displays Design Criteria, March 1972
SP-8091 (Environment)	The Planet Saturn (1970), June 1972
SP-8092 (Environment)	Assessment and Control of Spacecraft Electromagnetic Interference, June 1972
SP-8095 (Structures)	Preliminary Criteria for Fracture Control of Space Shuttle Structures, June 1971
SP-8098 (Guidance and Control)	Effects of Structural Flexibility on Entry Vehicle Control Systems, June 1972

NASA-Langley, 1972