NASA
SPACE VEHICLE
DESIGN CRITERIA
(CHEMICAL PROPULSION)

PROPERTY OF
MARSHALL LIBRARY
A&TS-MS-IL

NASA SP-8107

TURBOPUMP SYSTEMS FOR LIQUID ROCKET ENGINES

FOR
REFERENCE
ONLY

AUGUST 1974

NATIONAL AERONAUTICS AND SPACE ADMINISTRATION

FOREWORD

NASA experience has indicated a need for uniform criteria for the design of space vehicles. Accordingly, criteria are being developed in the following areas of technology:

Environment
Structures
Guidance and Control
Chemical Propulsion

Individual components of this work will be issued as separate monographs as soon as they are completed. This document, part of the series on Chemical Propulsion, is one such monograph. A list of all monographs issued prior to this one can be found on the final pages of this document.

These monographs are to be regarded as guides to design and not as NASA requirements, except as may be specified in formal project specifications. It is expected, however, that these documents, revised as experience may indicate to be desirable, eventually will provide uniform design practices for NASA space vehicles.

This monograph, "Turbopump Systems for Liquid Rocket Engines," was prepared under the direction of Howard W. Douglass, Chief, Design Criteria Office, Lewis Research Center; project management was by Harold W. Schmidt and M. Murray Bailey. The monograph was written by A. J. Sobin and W. R. Bissell, Rocketdyne Division, Rockwell International Corporation and was edited by Russell B. Keller, Jr. of Lewis. To assure technical accuracy of this document, scientists and engineers throughout the technical community participated in interviews, consultations, and critical review of the text. In particular, W. W. Heath of Aerojet Liquid Rocket Company; H. M. Gibson of Pratt & Whitney Aircraft Division, United Aircraft Corporation; and D. D. Scheer of the Lewis Research Center reviewed the text in detail.

Comments concerning the technical content of this monograph will be welcomed by the National Aeronautics and Space Administration, Lewis Research Center (Design Criteria Office), Cleveland, Ohio 44135.

August 1974

For sale by the National Technical Information Service
Springfield, Virginia 22151 $6.25

GUIDE TO THE USE OF THIS MONOGRAPH

The purpose of this monograph is to organize and present, for effective use in design, the significant experience and knowledge accumulated in development and operational programs to date. It reviews and assesses current design practices, and from them establishes firm guidance for achieving greater consistency in design, increased reliability in the end product, and greater efficiency in the design effort. The monograph is organized into two major sections that are preceded by a brief introduction and complemented by a set of references.

The State of the Art, section 2, reviews and discusses the total design problem, and identifies which design elements are involved in successful design. It describes succinctly the current technology pertaining to these elements. When detailed information is required, the best available references are cited. This section serves as a survey of the subject that provides background material and prepares a proper technological base for the *Design Criteria* and Recommended Practices.

The *Design Criteria*, shown in italics in section 3, state clearly and briefly what rule, guide, limitation, or standard must be imposed on each essential design element to assure successful design. The *Design Criteria* can serve effectively as a checklist of rules for the project manager to use in guiding a design or in assessing its adequacy.

The Recommended Practices, also in section 3, state how to satisfy each of the criteria. Whenever possible, the best procedure is described; when this cannot be done concisely, appropriate references are provided. The Recommended Practices, in conjunction with the *Design Criteria,* provide positive guidance to the practicing designer on how to achieve successful design.

Both sections have been organized into decimally numbered subsections so that the subjects within similarly numbered subsections correspond from section to section. The format for the Contents displays this continuity of subject in such a way that a particular aspect of design can be followed through both sections as a discrete subject.

The design criteria monograph is not intended to be a design handbook, a set of specifications, or a design manual. It is a summary and a systematic ordering of the large and loosely organized body of existing successful design techniques and practices. Its value and its merit should be judged on how effectively it makes that material available to and useful to the designer.

CONTENTS

	Page
1. INTRODUCTION	1
2. STATE OF THE ART	2
3. DESIGN CRITERIA and Recommended Practices	99
APPENDIX A – Conversion of U.S. Customary Units to SI Units	137
APPENDIX B – Glossary	139
REFERENCES	149
NASA Space Vehicle Design Criteria Monographs Issued to Date	153

SUBJECT	STATE OF THE ART		DESIGN CRITERIA	
PRELIMINARY DESIGN	*2.1*	12	*3.1*	99
System Requirements	*2.1.1*	12	*3.1.1*	99
Pump Headrise and Flowrate	*2.1.1.1*	13	*3.1.1.1*	99
Net Positive Suction Head	*2.1.1.2*	15	*3.1.1.2*	102
Propellant Properties	*2.1.1.3*	18	*3.1.1.3*	102
Turbine Drive Cycle	*2.1.1.4*	20	*3.1.1.4*	104
Throttling Range	*2.1.1.5*	26	*3.1.1.5*	105
Efficiency	*2.1.1.6*	28	*3.1.1.6*	105
Weight and Size	*2.1.1.7*	30	*3.1.1.7*	107
Conditioning	*2.1.1.8*	30	*3.1.1.8*	107
Life, Reliability, and Cost	*2.1.1.9*	31	*3.1.1.9*	107
Selection of System Type	*2.1.2*	32	*3.1.2*	108
Number of Units	*2.1.2.1*	33	*3.1.2.1*	108
Turbopump Equivalent-Weight Factor	*2.1.2.2*	33	*3.1.2.2*	108
Rotational Speed	*2.1.2.3*	34	*3.1.2.3*	109
Turbopump Arrangement	*2.1.2.4*	35	*3.1.2.4*	109
Pump Configuration	*2.1.2.5*	39	*3.1.2.5*	109
Turbine Configuration	*2.1.2.6*	44	*3.1.2.6*	111

SUBJECT	STATE OF THE ART		DESIGN CRITERIA	
DETAIL DESIGN AND INTEGRATION	*2.2*	48	*3.2*	112
Limits to Rotational Speed	*2.2.1*	48	*3.2.1*	112
Inducer Cavitation	*2.2.1.1*	48	*3.2.1.1*	112
Bearing DN	*2.2.1.2*	57	*3.2.1.2*	114
Seal Rubbing Speed	*2.2.1.3*	59	*3.2.1.3*	114
Turbine-Blade Centrifugal Stress	*2.2.1.4*	61	*3.2.1.4*	116
Gear Pitchline Velocity	*2.2.1.5*	63	*3.2.1.5*	116
Pump Design	*2.2.2*	63	*3.2.2*	118
Inducer Inlet Flow Coefficient	*2.2.2.1*	63	*3.2.2.1*	118
Stability	*2.2.2.2*	64	*3.2.2.2*	118
Tip Speed	*2.2.2.3*	64	*3.2.2.3*	119
Turbine Design	*2.2.3*	65	*3.2.3*	119
Performance Optimization	*2.2.3.1*	65	*3.2.3.1*	119
Exhaust Pressure	*2.2.3.2*	66	*3.2.3.2*	121
Turbopump Mechanical Integration	*2.2.4*	67	*3.2.4*	121
Bearing Placement	*2.2.4.1*	67	*3.2.4.1*	121
Turbine Rotor Assembly and Attachment	*2.2.4.2*	68	*3.2.4.2*	122
Turbopump Housing	*2.2.4.3*	72	*3.2.4.3*	123
Bearings and Seals	*2.2.4.4*	74	*3.2.4.4*	124
Axial Thrust Balance	*2.2.4.5*	75	*3.2.4.5*	124
Thermal Barriers	*2.2.4.6*	77	*3.2.4.6*	125
Assembly	*2.2.4.7*	78	*3.2.4.7*	126
System Interfaces	*2.2.5*	79	*3.2.5*	126
Pump Inlet	*2.2.5.1*	79	*3.2.5.1*	126
Pump Discharge	*2.2.5.2*	80	*3.2.5.2*	127
Turbopump Mounting	*2.2.5.3*	80	*3.2.5.3*	127
Gas-Generator Connection and Mounting	*2.2.5.4*	81	*3.2.5.4*	127
Turbopump Service on the Engine	*2.2.5.5*	81	*3.2.5.5*	128
Turbopump Overhaul	*2.2.5.6*	82	*3.2.5.6*	128
Start Systems	*2.2.6*	82	*3.2.6*	128
Main-Propellant-Tank Head	*2.2.6.1*	83	*3.2.6.1*	129
Pressurized-Gas Start Tanks	*2.2.6.2*	84	*3.2.6.2*	129
Liquid-Propellant Start Tanks	*2.2.6.3*	85	*3.2.6.3*	130
Solid-Propellant Start Cartridge	*2.2.6.4*	86	*3.2.6.4*	130

SUBJECT	STATE OF THE ART		DESIGN CRITERIA	
DESIGN EVALUATION	*2.3*	87	*3.3*	131
Engine-System Characteristics	*2.3.1*	87	*3.3.1*	131
Design-Point System Balance	*2.3.1.1*	87	*3.3.1.1*	131
Off-Design System Balance	*2.3.1.2*	88	*3.3.1.2*	132
Control Constraints	*2.3.1.3*	89	*3.3.1.3*	133
System Dynamic Analysis	*2.3.2*	90	*3.3.2*	133
Start	*2.3.2.1*	90	*3.3.2.1*	133
Throttling	*2.3.2.2*	93	*3.3.2.2*	134
Shutdown	*2.3.2.3*	94	*3.3.2.3*	134
System Instability (Pogo)	*2.3.2.4*	95	*3.3.2.4*	135
System Development Testing	*2.3.3*	96	*3.3.3*	135
Turbopump System	*2.3.3.1*	96	*3.3.3.1*	135
Engine System	*2.3.3.2*	97	*3.3.3.2*	136

LIST OF FIGURES

Figure	Title	Page
1	J-2 centrifugal-flow oxidizer turbopump assembly	6
2	J-2 axial-flow fuel turbopump assembly	7
3	RL10A-3-3 turbopump assembly	8
4	MA-5 booster turbopump assembly	9
5	YLR87-AJ-7 turbopump assembly	10
6	F-1 turbopump assembly	11
7	Typical pump performance map	14
8	Speed limits for 5500 psi LOX turbopump	16
9	Speed limits for 4300 gpm LOX turbopump	17
10	Schematics of basic turbine drive cycles	21
11	Effect of drive cycle and chamber pressure on pump discharge pressure (oxygen/hydrogen engine, mixture ratio = 6)	25
12	Headrise and flowrate limits to pump throttling	26
13	Effect of stage design specific speed on throttling characteristics of centrifugal pumps with sweptback impeller blades	27
14	Effect of turbopump efficiency on pump discharge pressure vs chamber pressure requirements (staged-combustion cycle)	28
15	Effect of centrifugal pump stage specific speed on pump efficiency (impeller tip diameter > 10 in.)	29
16	Effects of rotational speed on required configuration for a LOX turbopump	36
17	Schematics of basic turbopump arrangements	37
18	Efficiency vs stage specific speed for various types of pumps	39

Figure	Title	Page
19	Estimated effect of pump configuration on efficiency and engine throttling for a pump specific speed of 1000.	41
20	N_s-D_s diagram for various kinds of pumps.	43
21	Typical design point efficiencies for 1-, 2-, 3-, and 4-stage turbines (supersonic relative Mach number).	45
22	Typical turbine velocity ratios as a function of pressure ratio (inlet temperature of 1500° F).	46
23	Approximate regions of application for various kinds of rocket engine turbines.	47
24	Influence of inducer design inlet flow coefficient on cavitation performance.	50
25	Influence of inducer design inlet flow coefficient on inducer hydraulic efficiency	50
26	Summary of empirical data on suction performance of various pumps and inducers	51
27	Thermodynamic suppression head factor for various propellants as a function of vapor pressure.	54
28	Schematics of four methods for driving an inducer.	55
29	Vapor pumping capability for two-phase inducers.	56
30	Schematics of bearing support arrangements.	57
31	Typical effects of turbine pressure ratio on design at the limit of turbine-blade centrifugal stress.	62
32	Mark 29 experimental LH_2 pump.	69
33	Balance piston assembly.	76
34	Typical effect of type of mixture-ratio control on pump discharge pressure (staged-combustion cycle).	90
35	Illustration of incremental method for determining isentropic headrise	101
36	Effects of variations in pump NPSH on various design factors.	103
37	Zero-NPSH pumping capability requirements for hydrogen and for oxygen.	115

Figure	Title	Page
38	Flow charts for determining turbopump speed and weight at the turbine-blade centrifugal-stress limit.	117
39	Effect of turbine inlet temperature on various design factors in turbine optimization (gas-generator cycle).	120
40	Probability ellipses for turbopump operation.	132

LIST OF TABLES

Table	Title	Page
I	Chief Features of Operational Turbopump Assemblies	3
II	Chief Features of Operational Turbopumps	4
III	Chief Features of Operational Turbines	5
IV	Effect of Propellant Density on Turbopump Design (Comparison of Oxidizer and Fuel Pumps for J-2 Engine)	19
V	Advantages and Disadvantages of Major Turbine Drive Cycles	22
VI	Comparison of Operational and Design Limits on Turbine Drive Cycles	23
VII	Guide for Screening Candidate Turbopump Arrangements	110
VIII	Comparison of Typical Drive Systems for Boost Pumps and Preinducers	113
IX	Fluids Suitable for Pump Testing	136

TURBOPUMP SYSTEMS

FOR LIQUID ROCKET ENGINES

1. INTRODUCTION

The turbopump assembly for a modern liquid propellant rocket engine is a complete system in itself. It consists of many components, some of which are themselves subsystems (e.g., the pump and the turbine). This monograph deals with the turbopump as a system, covering selection of the proper system type for each application and integration of the components into a working system. Details on the design of the various components including inducers, pumps, turbines, gears, and bearings may be found in the appropriate component monographs (refs. 1 through 10).

Rocket engine turbopumps have demonstrated excellent reliability in service. However, because of the strong emphasis on light weight and high performance, many of the turbopump components are designed near the limits of the state of the art. Therefore, many problem areas must be avoided if the turbopump is to be reliable and compatible with the vehicle. For example, to meet the performance and weight requirements, the turbopump must operate at high speed and, consequently, must have bearings and seals that will satisfy life requirements at high speed; in addition, the pump must have a high-suction-performance inducer so that tank pressure and weight are minimized. At the same time, the turbopump housing must accommodate the wide variations in temperature between the pumps and the turbine without affecting alignment or imposing excessive radial or axial loads on the bearings. The design problem is made more complex by the wide range of possible duty cycles and by a constantly advancing state of the art.

The monograph is organized to follow the logical succession of events in the development of a turbopump system from preliminary design through testing on the rocket engine. This process normally begins with a preliminary design phase in which the turbopump size, the component types, and the component arrangement are selected to meet the system requirements. The next phase is detail design and integration, in which the final rotational speeds are selected within the constraints of the various mechanical and hydrodynamic limits, the pump and the turbine are optimized within the constraints of the mechanical and fluid dynamic limits, and the components are integrated into an overall turbopump assembly. The final phase is design evaluation, in which the turbopump design is evaluated by both computer simulation and experimental testing.

2. STATE OF THE ART

The chief features of operational turbopump assemblies, pumps, and turbines are displayed in tables I, II, and III, respectively.

To minimize inert weight and thereby increase the delivered payload, the turbopump system for a liquid rocket engine has the highest power-to-weight ratio in the entire field of rotating machinery. Specific horsepower (hp/lbm)*, which was high in the mid-1950's, has increased even further in more recent engines. Table I, in which rocket engine turbopump assemblies that have been used on flight vehicles are listed in approximate chronological order, illustrates this progress. In approximately 10 years, the specific horsepower increased from 2.22 for the Redstone turbopump assembly to values greater than 10 for the Saturn V (F-1 and J-2 engines) turbopump assemblies. The turbopumps for Space Shuttle Main Engine (SSME), which will undergo initial development testing in 1974, will increase the specific horsepower by another order of magnitude to a value greater than 100.

This increase in specific horsepower has been achieved primarily by developing turbopump systems that can operate reliably at high speed. High-speed bearings and seals were developed and utilized in systems that exert low axial thrusts on the bearings. High-speed inducers then were developed to enable high-speed pump operation without any increase in pump inlet pressurization requirements, a very important condition because of the increase in inert weight involved in raising the pressure level in large propellant tanks. As shown for the F-1 and J-2 turbopump assemblies, the high-speed technology has made it no longer necessary to use gearing to couple a high-volume pump with an efficient, high-speed turbine. As a result, the latest designs have the pump connected directly to the turbine.

In general, the pumps for all propellants other than hydrogen have been single-stage, centrifugal designs (table II). Simplicity, light weight, and good performance on and off design are the reasons for this selection; the J-2 centrifugal-flow oxidizer pump shown in figure 1 is a good example of the current state of the art. For hydrogen, the high headrise requirement has made it necessary to employ multiple stages in order to stay within the centrifugal-stress limits for pump impellers. As a result, an eight-stage (including the inducer stage) axial design was used for the J-2 fuel pump (fig. 2) and a two-stage centrifugal design was used for the RL10 turbopump (fig. 3). The Atlas MA-5 booster turbopump assembly (fig. 4) has the fuel and oxidizer pumps on the same shaft and uses a double gear reduction from the drive turbine. The Titan II YLR87-AJ-7 (fig. 5) has a geared-turbine arrangement with the fuel and oxidizer pumps on separate shafts. The F-1 turbopump assembly (fig. 6) has both pumps and the turbine on the same shaft. The turbines for all but the Agena LR81-BA-11 engine have had two rotors, the design being either velocity compounded or

*Factors for converting U.S. customary units to the International System of Units (SI units) are given in Appendix A.

Table I. – Chief Features of Operational Turbopump Assemblies[1]

Engine				Turbopump Assembly				
Designation	Application	Thrust, lbf	Chamber pressure, psia	Arrangement	Efficiency, percent	Weight, lbm	Specific horsepower, hp/lbm	Start system
A-7	Redstone	78 000	318	Single shaft, turbine in middle	26.4	332	2.22	Liquid monopropellant start tank
MB-3	Thor	170 000	594	Geared turbine	46.0	562	5.40	Solid propellant start cartridge
LR87-AJ-3	Titan I, 1st stage	150 000	585	Geared turbine and pumps	45.8	720	5.11	Liquid propellant start tanks
LR91-AJ-3	Titan I, 2nd stage	80 000	682	Geared O_2 pump	34.0	204	7.25	Liquid propellant start tanks
H-1	Saturn IB	205 000	702	Geared turbine	47.0	520	7.98	Solid propellant start cartridge
MA-5 sustainer	Atlas	57 000	706	Geared turbine	35.0	229	7.27	Solid propellant start cartridge
MA-5 booster	Atlas	330 000[2]	577	Geared turbine	48.0	875	3.59	Solid propellant start cartridge
F-1	Saturn IC	1 522 000	1122	Single shaft, turbine on end	44.6	3150	16.6	Tank head
YLR81-BA-11	Agena	16 000	506	Geared turbine and pumps	20.0	60.5	5.81	Solid propellant start cartridge
YLR87-AJ-7	Gemini-Titan 1st stage	215 000	784	Geared turbine and pumps	38.1	484	10.70	Solid propellant start cartridge
YLR91-AJ-7	Gemini-Titan 2nd stage	100 000	804	Geared N_2O_4 pump	–	256	8.30	Solid propellant start cartridge
RL10A-3-3	Centaur	15 000	400	Geared O_2 pump	42.0	76.1	9.03	Tank head
J-2	Saturn S-II and S-IVB	230 000	787	Dual turbopump, series turbines	37.4	305	7.73	Pressurized-gas start tank
					44.9	369	21.60	
SSME (EPL*)[3] high pressure	Space Shuttle	512 300	3237	Dual turbopump, parallel turbines	56.5	555	50.0	Tank head
					58.5	701	108.9	

[1]Based on the best available data as of mid-1973. Numbers presented are those for a turbopump operational system.
[2]Two engines, each developing 165 000 hp.
[3]Not operational, but presented for comparative purposes. *Emergency power level.

Table II. – Chief Features of Operational Turbopumps*

Engine designation	Propellant	Propellant density, lbm/ft³[1]	Pump type	Number of stages	Discharge pressure, psia	Rated inlet pressure, psia	Head rise, ft	Weight flowrate, lbm/sec	Volume flowrate, gpm	Rotational speed, rpm	$NPSH_{min.}$ ft[2]	$NPSH_{crit.}$ ft[3]	Efficiency, percent	Power, hp
A-7	Oxygen	71.4	Centrifugal	1	356	49.8	616	205	1 290	4 718	18	11	72.0	320
	Alcohol[4]	56.6			464	42.5	1 139	150	1 190	4 718	40	35	70.0	418
MB-1	Oxygen	71.4			867	53.0	1 651	456	2 870	6 303	55		79.0	1 830
	RJ-1	53.2			913	48.0	2 337	202	1 700	6 303	34		72.0	1 210
LR87-AJ-3	Oxygen	71.4			798	53.0	1 510	412.7	2 600	7 949	40	–		–
	RP-1	50.5			1034	22.0	2 881	183.3	1 630	8 780	30			–
LR91-AJ-3	Oxygen	71.4			819	35.0	1 613	175.6	1 100	8 945	31	–	–	–
	RP-1	50.5			1097	42.0	3 024	74.1	659	25 207	100	–		–
H-1	Oxygen	70.8			980	65.0	1 851	537	3 410	6 680	35	25	77.8	2 340
	RP-1	50.5			1020	57.0	2 719	240	2 130	6 680	35	28	71.8	1 670
MA-5 sustainer	Oxygen	71.4			982	53.0	1 879	193.2	1 200	10 160	30	14	64.2	1 018
	RP-1	50.5			996	22.0	2 616	91.6	745	10 160	85	60	64.5	620
MA-5 booster	Oxygen	71.4			877	50.0	1 679	458	2 862	6 314	40		74.3	1 800
	RP-1	50.5			839	23.0	2 184	211	1 867	6 314	31		73.6	1 151
F-1	Oxygen	71.4			1600	65.0	3 097	4070	25 200	5 488	65	60	74.6	30 200
	RP-1	50.5			1556	45.0	5 168	1715	15 250	5 488	70	55	72.6	22 100
YLR81-BA-11	IRFNA[5]	98.2			949	24.0	1 360	39.3	180	25 389	12	–	–	352
	UDMH[6]	49.4			749	24.0	2 110	15.3	139	14 410	34		–	352
YLR87-AJ-7	N_2O_4	90.3			1182	84.0	1 740	550	2 700	8 382	44		68.0	2 560
	A-50[7]	56.1			1363	33.5	3 381	274	2 180	9 209	43		68.0	2 480
YLR91-AJ-7	N_2O_4	90.3	Mixed Flow		1112	41.0	1 713	207	1 010	8 405	30		67.4	960
	A-50	56.1	Mixed Flow		1201	44.5	2 981	115	904	21 685	100		57.1	1 090
RL10A-3-3	Oxygen	68.8	Centrifugal		597	60.5	1 120	28.2	184	12 100	17	–	62.9	94
	Hydrogen	4.35	Centrifugal	2	990	30.0	31 800	5.6	581	30 250	132		55.0	592
J-2	Oxygen	70.8	Centrifugal	1	1114	39.0	2 185	460.4	2 920	8 753	25	18	80.0	2 358
	Hydrogen	4.4	Axial	7* inducer stage	1238	30.0	38 000	53.6	8 530	27 130	130	75	73.0	7 922
SSME (EPL)** high pressure	Oxygen	70.4	Centrifugal	1/2[8]	5174/ 8491	379/ 4940	9640/ 7100	1137/ 120	7250/ 613	31 000	(9)	(9)	78.1/ 69.6	27 400
	Hydrogen	4.38	Centrifugal	3	6981	188	193 900	160.5	16 450	37 400	(9)	(9)	74.1	76 400

*Based on the best data as of mid-1971. Numbers presented are those for a turbopump operational system.

(1) At temperature specified by the application

(2) Contractually specified pump NPSH, maximum acceptable

(3) NPSH at a given drop in pump discharge pressure, generally 2 percent

(4) 75 percent alcohol, 25 percent water

(5) Inhibited red fuming nitric acid

(6) Unsymmetrical dimethylhydrazine, $(CH_3)_2NNH_2$

(7) 50 percent hydrazine and 50 percent UDMH.

(8) 10 percent of the flow goes through a second stage, numbers below slash are for second stage alone

(9) Boost pump upstream

**Not operational, but presented for comparative purposes.

Table III. – Chief Features of Operational Turbines[1]

Engine designation	Working fluid	Number of stages	Type	Inlet temperature, °F	Inlet pressure, psia	Pressure ratio	Flowrate, lbm/sec	Rotational speed, rpm	Efficiency, percent	Power, hp	Pitchline velocity, ft/sec
A-7	H_2O_2	1*	2-row velocity compounded	740	371	21.2	6.68	4 718	37.2	758	412
MB-3	O_2/RJ-1	2	pressure compounded	1204	523	17.6	15.4	30 540	–	3 162	1200
LR87-AJ-3	O_2/RP-1	2	pressure compounded	1334	413	17.8	11.7	25 172	63.6	3 678	1035
LR91-AJ-3	O_2/RP-1	2	pressure compounded	1240	560	28.2	6.31	25 207	63.1	1 480	1020
H-1	O_2/RP-1	2	pressure compounded	1200	622	17.7	18.0	32 700	70.2	4 141	1290
MA-5 sustainer	O_2/RP-1	2	pressure compounded	1075	692	25.0	9.73	38 000	46.3	1 663	995
MA-5 booster	O_2/RP-1	2	pressure compounded	1240	497	15.7	14.07	30 986	66.9	3 140	1205
F-1	O_2/RP-1	1*	2-row velocity compounded	1450	920	16.4	171.8	5 488	60.5	52 900	840
YLR81-BA-11	IRFNA/UDMH	1	impulse, partial admission	1400	480	37.7	1.58	24 800	41.0	352	855
YLR87-AJ-7	N_2O_4/A-50	2	pressure compounded	1667	443	17.8	12.85	23 992	56.0	5 180	980
YLR91-AJ-7	N_2O_4/A-50	2	pressure compounded	1650	420	29.0	5.46	23 685	53.0	2 122	964
RL10A-3-3	Hydrogen	2	pressure compounded	–106	698	1.42	5.35	30 250	74.0	687	782
J-2 – Oxidizer	O_2/H_2	1*	2-row velocity compounded	760	89.5	2.5	5.0	8 753	48.4	2 358	590
Fuel	O_2/H_2	1*	2-row velocity compounded	1200	657	7.3	7.0	27 130	60.1	7 977	1480
SSME (EPL)[2] High Pressure Oxidizer	O_2/H_2	2	reaction	1101	5880	1.59**	63.3	31 000	72.9**	27 400	1363
Fuel	O_2/H_2	2	reaction	1391	5820	1.56**	159.0	37 400	79.0**	76 400	1661

[1]Based on the best available data as of mid-1973. Numbers presented are those for a turbopump system. Similar tables in monographs on system components (e.g., ref. 4) present design values that may differ somewhat from the information given above.

[2]Not operational, but presented for comparative purposes.

*1-stage because it has 1 nozzle, 2-row because it has 2 rotor blade rows.

**Total-to-total fluid condition basis.

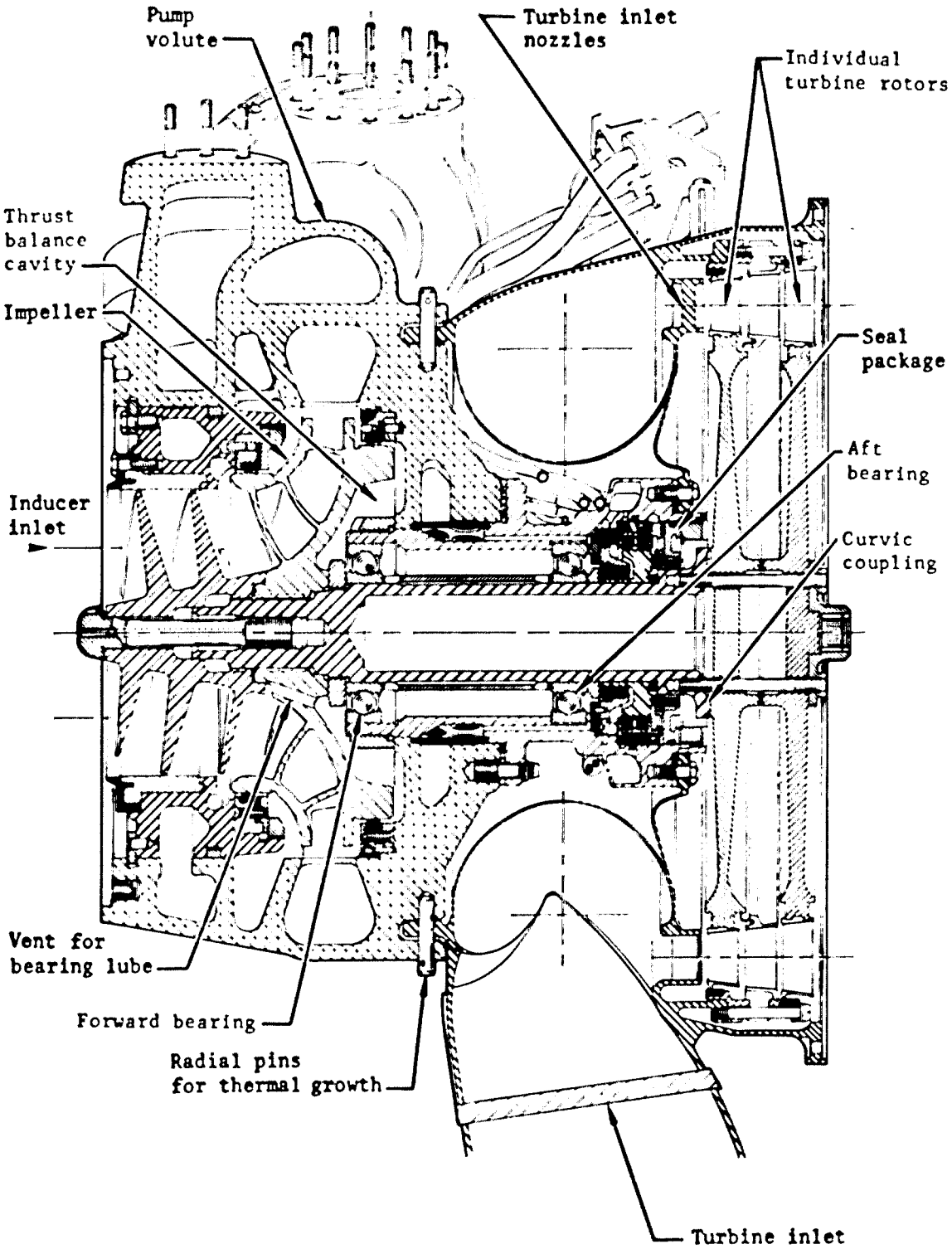

Figure 1. – J-2 centrifugal-flow oxidizer turbopump assembly.

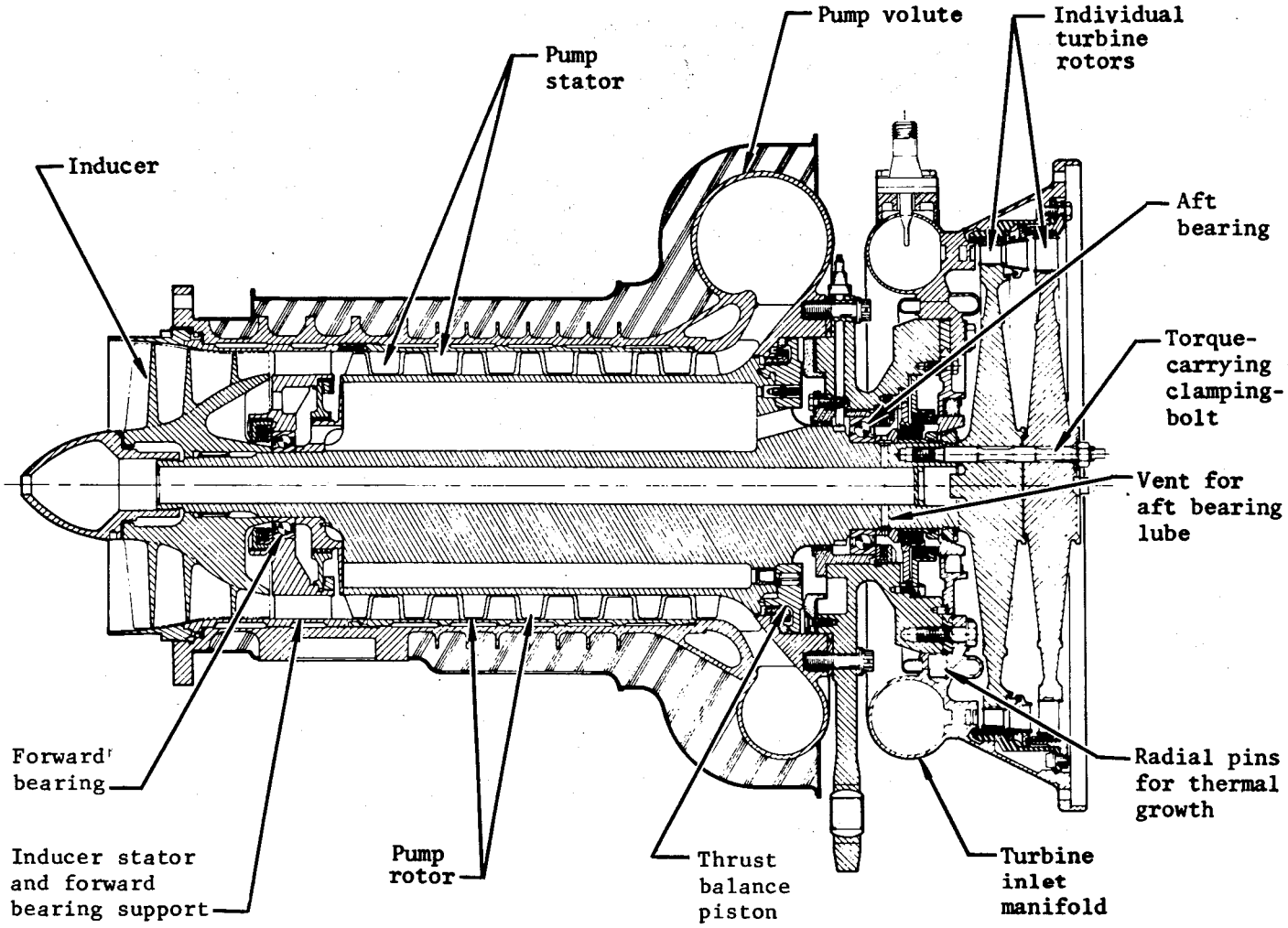

Figure 2. — J-2 axial-flow fuel turbopump assembly.

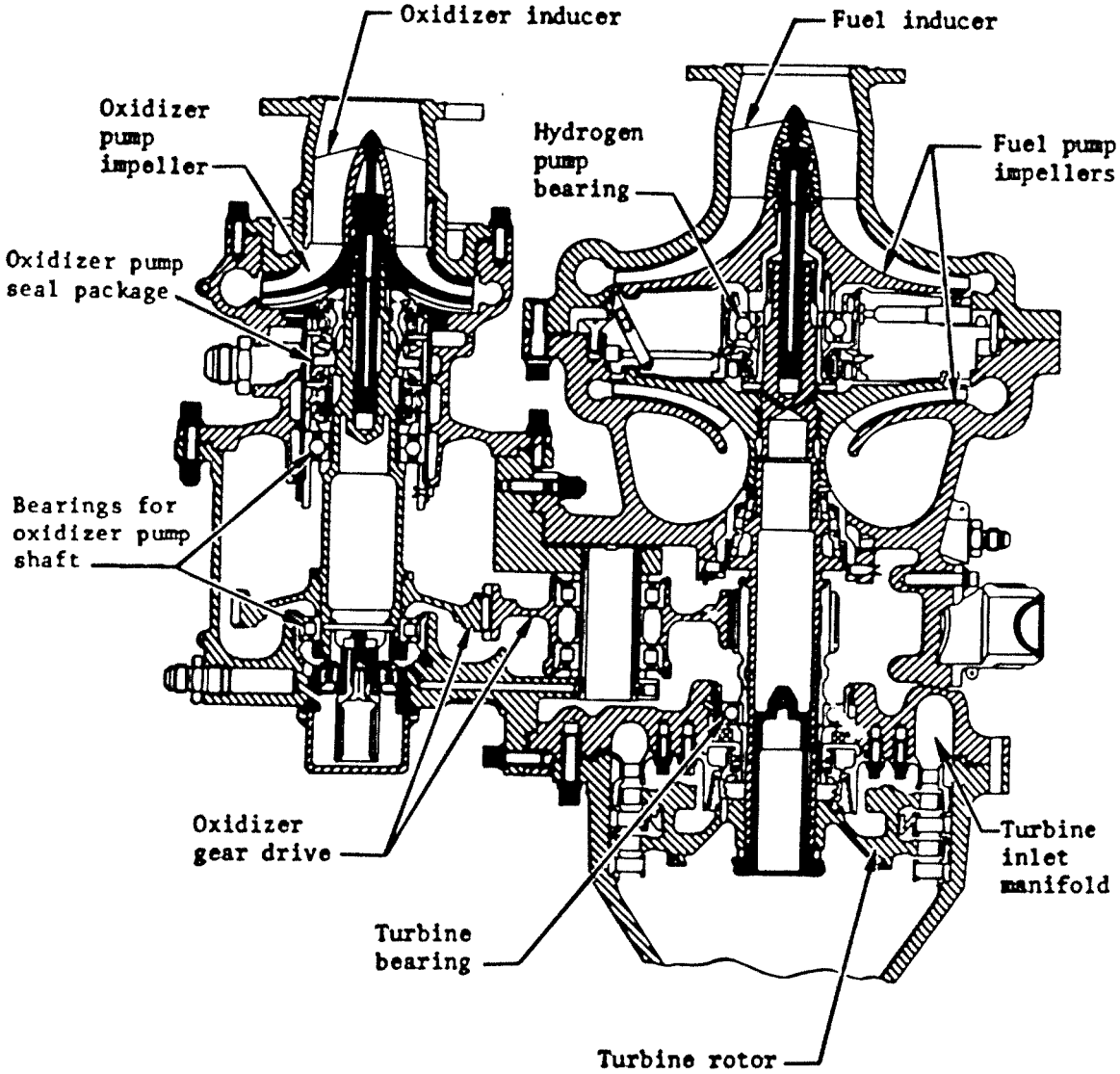

Figure 3. – RL10A-3-3 turbopump assembly.

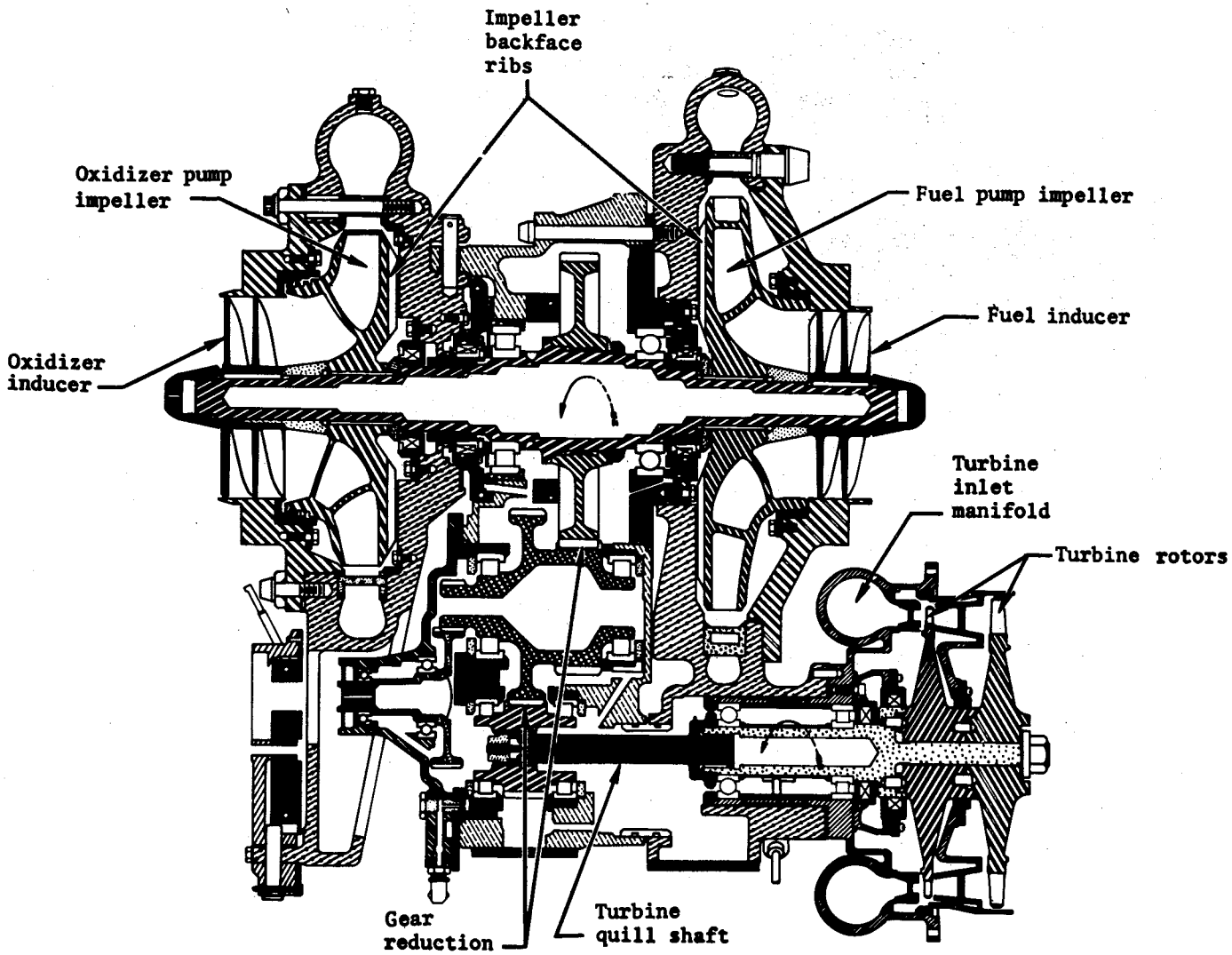

Figure 4. — MA-5 booster turbopump assembly.

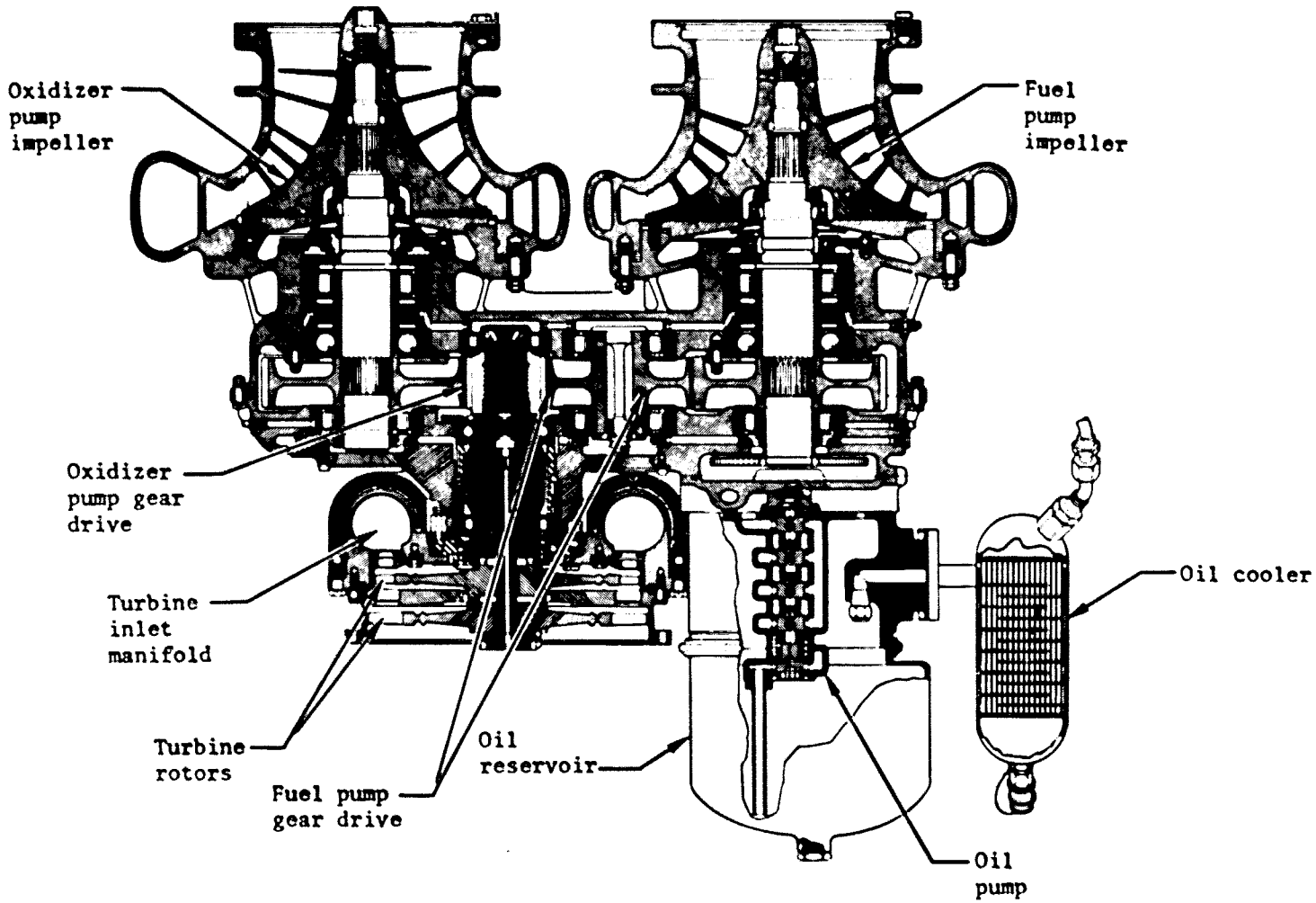

Figure 5. – YLR87-AJ 7 turbopump assembly.

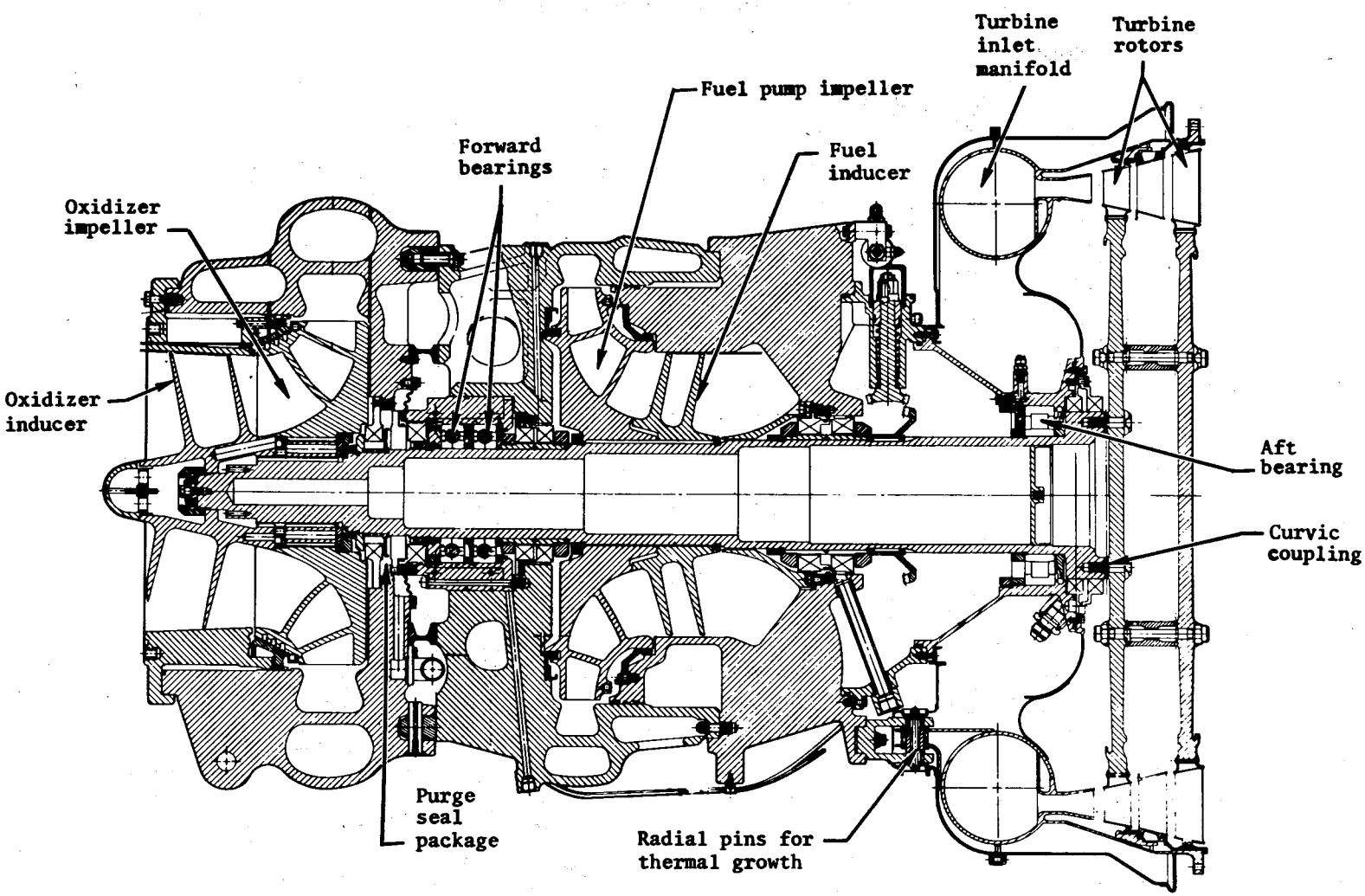

Figure 6. — F-1 turbopump assembly.

pressure compounded; the LR81-BA-11 had a single-stage impulse turbine. Thus, a wide variety of approaches for turbopump design and arrangement has been used.

To meet future requirements for high chamber pressure and wide throttling range, turbopump systems will continue to use single-stage centrifugal pumps for propellants other than hydrogen and multistage centrifugal pumps for most hydrogen applications. Two-phase pumping capability will become increasingly important as a means to simplify the tank pressurization system by permitting the cryogenic* propellants in the tank to be saturated. Future attitude control and auxiliary propulsion engines may be fed through gaseous accumulators charged by small turbopumps. To minimize the accumulator size, each turbopump will have to start thousands of times and, after each start, operate for only a few seconds. As a result, rapid and efficient pump preconditioning will become increasingly important.

2.1 PRELIMINARY DESIGN

2.1.1 System Requirements

The turbopump system requirements stem from the engine system in which the turbopump will be used. The basic requirement is that the turbopump operate within the limits of the engine system while delivering propellants at the conditions required by the engine thrust chamber; more specifically, the various sytem requirements are evaluated individually and collectively for their impact on the turbopump design. In turbopump system design, there is a strong emphasis on attaining the lowest weight, because a relatively low system weight will enable the vehicle to deliver a proportionately higher payload.

Because pump speed is a strong influence in all phases of turbopump design and performance, pump rotational speed N and pump specific speed N_s evidence themselves as important design parameters in the evaluation process. These parameters are related by the expression

$$N_s = \frac{NQ^{1/2}}{H^{3/4}} \tag{1}$$

*Terms and symbols, materials, and vehicles and engines are defined or identified in Appendix B.

where

N_s = specific speed, rpm-(gpm)$^{1/2}$/ft$^{3/4}$

N = rotational speed, rpm

Q = volume flowrate, gpm

H = headrise, ft

An increase in the rotational speed increases the pump specific speed, which, in turn, generally reduces the head coefficient and, therefore, increases the throttling range. An increase in speed can reduce the number of pump stages required to provide a given head efficiently and, if the specific speed is below 2000 to 3000, can increase the pump efficiency. In addition, increasing the speed will often increase the turbine efficiency and will almost always reduce the turbopump weight. On the negative side, increasing the speed increases the pump inlet pressurization requirements, decreases pump life, and increases the cost required to attain a given reliability.

2.1.1.1 PUMP HEADRISE AND FLOWRATE

Pump headrise and flowrate are the basic requirements imposed on the turbopump system, because the specified pressure and quantity of propellant must be delivered to the engine thrust chamber if it is to develop its design thrust. Pump designers generally prefer to work with headrise and volume flowrate because for a given pump design these terms are independent of propellant density, whereas pressure rise and weight flowrate are not. As a consequence of this independence, a pump performance map based on headrise and volume flowrate (fig. 7) applies to all propellant densities unless compressibility effects are present, as in high-pressure hydrogen pumps.

Pump-developed head at the design value for propellant flowrate (engine design thrust) is the difference between the discharge head and the suction head. The discharge head (discharge pressure) must be sufficient to overcome the hydraulic resistances in the propellant system and deliver propellant to the thrust chamber at the required pressure. For example, in a regeneratively cooled engine with a gas-generator cycle, the pump discharge pressure must equal the sum of the propellant line losses, the pressure drop in the cooling jacket, the pressure drop in the injector, and the engine chamber pressure. If the pressure is insufficient, the engine chamber pressure will be less than the design value, and design thrust will not be reached.

The headrise required in a pump frequently is approximated by dividing the pressure rise by the propellant density or, more accurately, by the average propellant density. The most

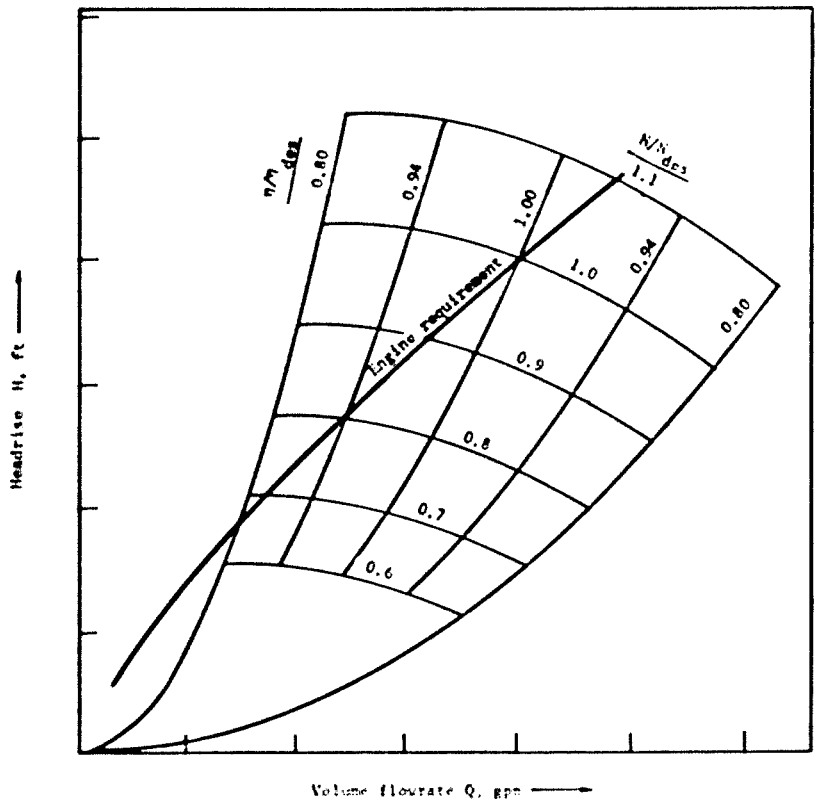

Figure 7. – Typical pump performance map.

accurate method is to use the propellant properties to determine the isentropic enthalpy rise that will produce the required pressure rise. This enthalpy rise can then be converted to headrise. For situations in which propellant compressibility is significant (e.g., in high-pressure hydrogen pumps), the procedure involving isentropic enthalpy rise is applied in increments with the enthalpy at the beginning of a given increment being determined by adding the actual increment (isentropic increment divided by the pump efficiency) to the previous actual enthalpy. This procedure is necessary because the propellant heating caused by the inefficiency in one increment decreases the flow density at the beginning of the next increment. As a result, the headrise based on isentropic enthalpy rise as the sum of the isentropic increments is roughly half-way between the headrise determined from the inlet density and the headrise based on a single-step isentropic enthalpy rise. This propellant heating effect had little influence on the RL10 and J-2 hydrogen pumps because the discharge pressures were approximately 1000 and 1250 psia, respectively. However, propellant heating is a very significant factor for 6000-psi hydrogen pumps.

The volume flowrates required from the pumps are established from the engine thrust, engine specific impulse, engine mixture ratio, and the density of the propellant being considered. There is often some question as to whether to use the inlet, the discharge, or the average density. The inlet density is easier to determine, but the discharge or the average density is more accurate if the headrise is to be calculated from the flow-passage geometry and the volume flowrate. A general policy is to use inlet density for preliminary design where accuracy is not critical, and local density for the detail design of blade flow passages. During off-design operation, the requirements generally are determined over the entire operating range, because a turbopump system often encounters its most severe operating conditions during off-design operation.

Figures 8 and 9, which present various kinds of pump speed limits for specified conditions, illustrate the effect of pump flowrate and headrise on the turbopump design speed. Regardless of the mechanical or hydrodynamic limit (sec. 2.2.1) at which the turbopump is designed, increasing the flowrate decreases the allowable design speed. If the turbopump is designed at the bearing DN or the seal speed limits, increasing the headrise (discharge pressure) also decreases the allowable design speed. However, if the pump is designed at a given value of specific speed to obtain the characteristics of a given type of pump, increasing the headrise will increase the speed. As far as the other limits are concerned, discharge pressure has little effect on speed.

2.1.1.2 NET POSITIVE SUCTION HEAD

By definition, net positive suction head NPSH is the difference, at the pump inlet, between the head due to total fluid pressure and the head due to propellant vapor pressure; it is expressed in feet of the propellant being pumped. In the preliminary design phase of the vehicle, the NPSH is determined from an optimization that considers the weights of the vehicle tank, the tank pressurization system, the pressurization gas, and the feed line and, in addition, the system cost, the pump efficiency, and the turbopump weight. The trade often is made without the last two items because, in most cases, vehicle considerations far outweigh engine considerations.

If the NPSH is less than a certain critical value, cavitation will occur in the pump inlet, and the pump headrise will be less than the design value. This critical NPSH is usually the value where the headrise is 2 percent less than the noncavitating value. Three methods have been used to correct the problem of an NPSH insufficient for the pump to meet design requirements: (1) increasing the tank pressure, which increases the NPSH supplied but also increases the required tank wall thickness and the tank weight; (2) decreasing the pump design speed, which decreases the NPSH required but also decreases the pump efficiency and increases the turbopump weight; and (3) redesigning the pump inlet by increasing the diameter and lowering the flow coefficient, a step that decreases the NPSH required but can decrease the pump efficiency. (Method (3) was used to meet the engine requirements with

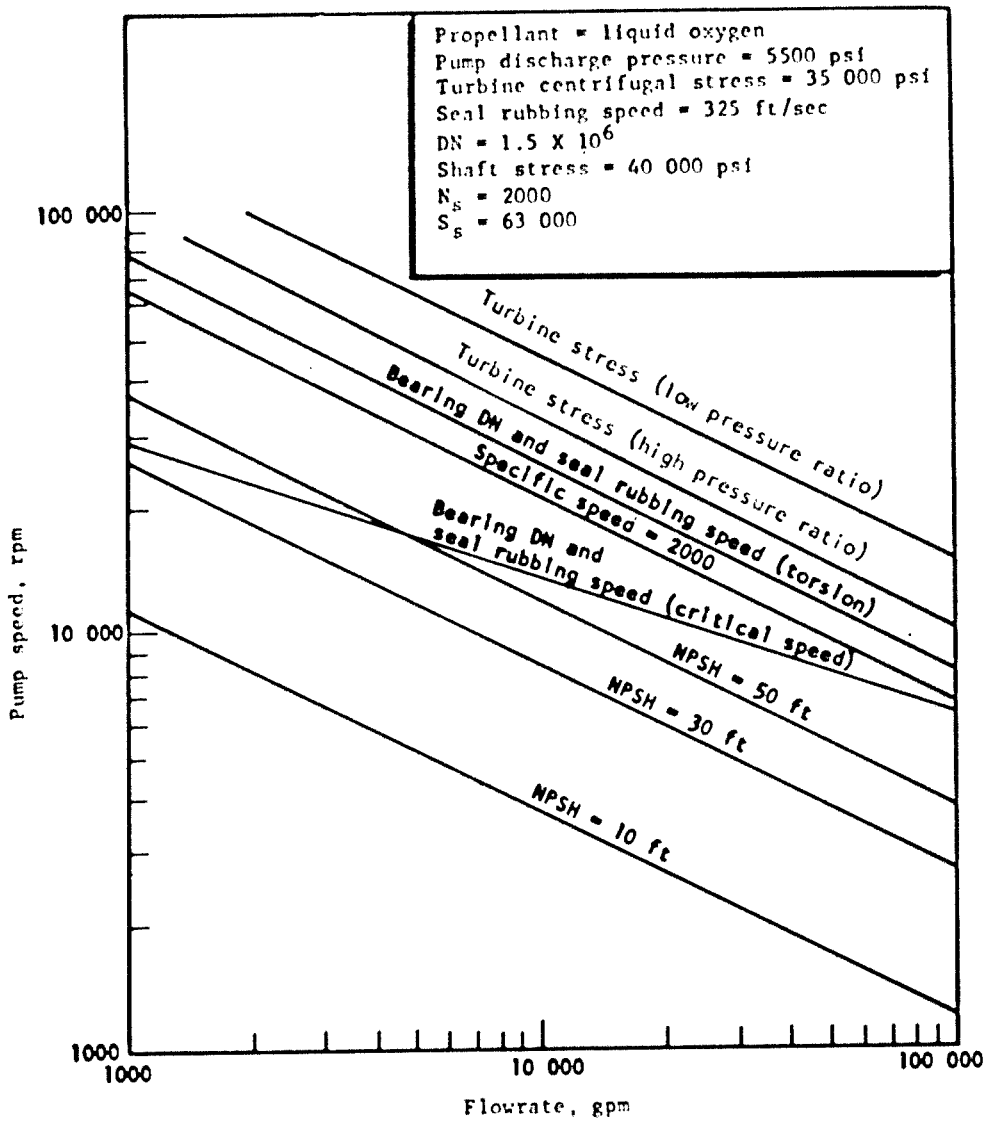

Figure 8. – Speed limits for 5500 psi LOX turbopump (ref. 2).

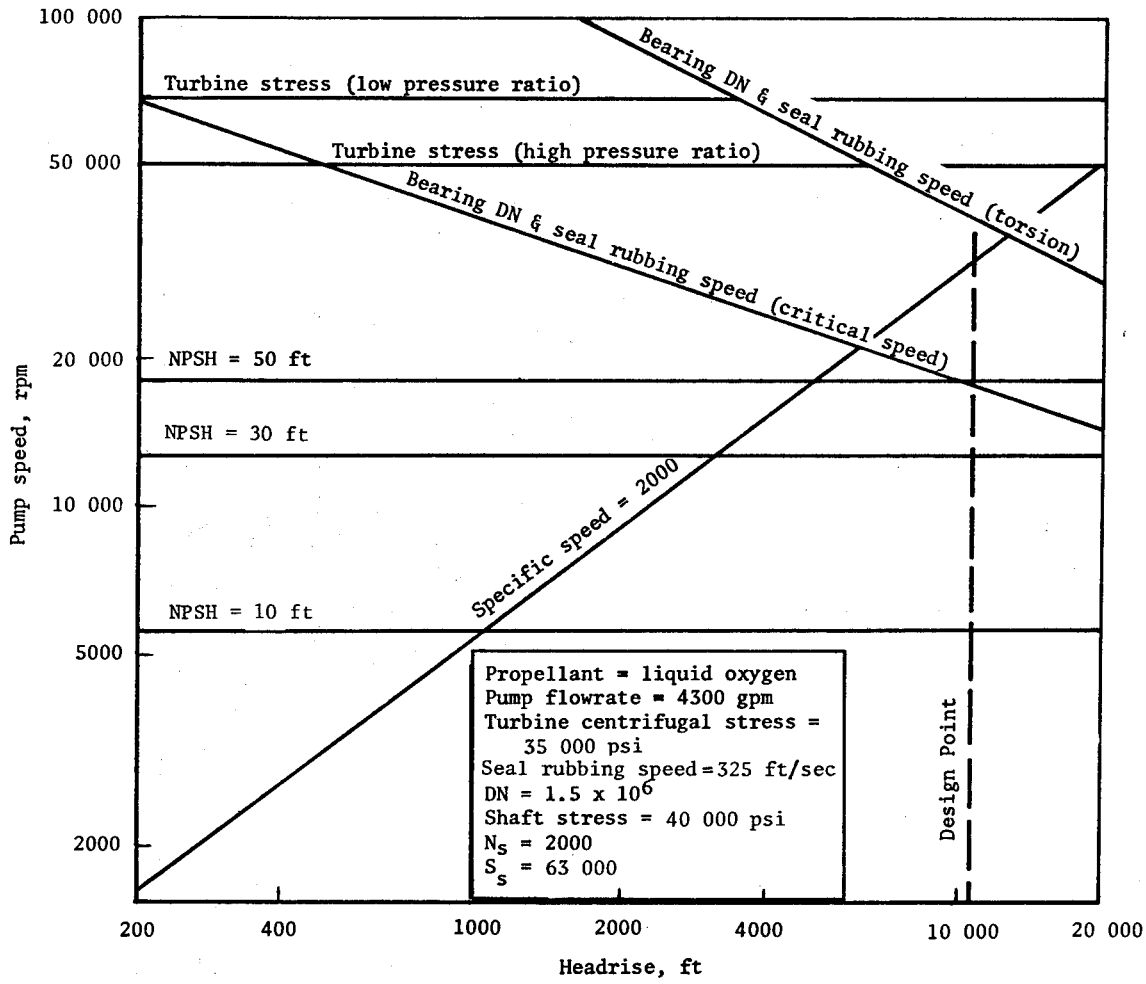

Figure 9. – Speed limits for 4300 gpm LOX turbopump.

the J-2 hydrogen pump.) A more detailed discussion of the interrelation of critical NPSH, pump speed, and pump design is contained in section 2.2.1.1.

2.1.1.3 PROPELLANT PROPERTIES

Propellant physical properties have a great influence on turbopump system design. Propellant density affects the turbopump design-point requirements (i.e., headrise, NPSH, volume flowrate, and horsepower). In the bearings and seals, the corrosive, cooling, lubricating, and viscosity characteristics of the propellant affect the material selection, the speed limits (secs. 2.2.1.2 and 2.2.1.3), the method of lubrication, and the size of the bearing-and-seal package. The size of the bearing-and-seal package can also influence the turbopump arrangement (sec. 2.1.2.4). The propellant saturation temperature affects material selection and thermal-conditioning requirements for the pump. In the turbine, the specific heat, specific heat ratio, and molecular weight of the turbine working fluid affect the blade heights and pitchline velocities, the type of staging, and the number of stages (secs. 2.1.1.6 and 2.1.2.6).

Density is the propellant property that has the greatest effect on turbopump design. Densities of rocket engine propellants range from 98 lbm/ft^3 for inhibited red fuming nitric acid (IRFNA) to 4.4 lbm/ft^3 for liquid hydrogen (LH_2). The effects of this wide range are illustrated by a comparison of the J-2 liquid-oxygen and liquid-hydrogen turbopumps (table IV).

As shown, the headrise in the LH_2 inducer alone is more than twice the headrise of the whole LO_2 pump, and overall headrise for the LH_2 pump is almost 20 times the LO_2 value, even though the pressure rises for the two pumps are very similar. As a result of the difference in headrise, the tip speed of the LH_2 pump is more than twice as great as the tip speed of the LO_2 pump; if the LH_2 pump were a single-stage centrifugal type (i.e., similar to the LO_2 pump), the tip speed would have to be four times the value for the LO_2 pump. In addition, the LH_2 pump weighs 64 pounds more and requires more than three times as much horsepower, even though the weight flowrate of the LO_2 pump is more than five times greater.

The differences in size between LH_2 turbopumps and other turbopumps are minimized by the fact that hydrogen turbopumps can be rotated faster because the bearing DN and seal speed limits are higher. Because of the relatively high density of LO_2, the LO_2 pump usually can be designed to deliver the required pressure rise in a single stage at the optimum rotational speed without encountering any limitations on component speeds that cannot be alleviated. However, the cavitation characteristics and the density of LO_2 are such that a preinducer would be required in order to avoid high tank pressures. Conversely, because of the low density of LH_2, a LH_2 turbopump usually cannot be designed at the speed that would produce the highest payload, because the centrifugal stress on the turbine blade limits

Table IV. – Effect of Propellant Density on Turbopump Design (Comparison of Oxidizer and Fuel Pumps for J-2 Engine)

Pump characteristic	Liquid oxygen, 70.8 lbm/ft^3	Liquid hydrogen, 4.4 lbm/ft^3
Pump type	centrifugal	axial
Number of stages	1	7 + inducer
Weight flowrate, lbm/sec	460.4	83.6
Volume flowrate, gpm	2920	8530
Rotational speed, rpm	8753	27 130
Pressure rise, psi	1075	1208
Inducer headrise, ft	(no inducer)	5050
Pump headrise, ft	2185	38 000
NPSH, ft	18	75
Impeller discharge tip speed, ft/sec	390	865
Turbopump weight, lbm	305	369
Power, hp	2358	7977

the speed (sec. 2.2.1.4). However, since LH_2 has excellent cavitation characteristics and a low density, a hydrogen pump may not require a preinducer. For some applications, the cavitation characteristics of hydrogen make operation feasible at zero NPSH at the tank (sec. 2.2.1.1). Since the cavitation characteristics of propellants other than LH_2, LO_2, and RP-1 are not widely known, because test data are lacking, performance like that of water is assumed for such propellants until sufficient test data are obtained. For a more detailed discussion on cavitation performance, consult section 2.2.1.1.

For rocket engines in which the two propellant densities are similar (e.g., LO_2/RP-1), pump rotational speeds are similar, and the fuel and oxidizer pumps generally are mounted on the same shaft, as in the F-1 engine system. When propellants differ widely in densities (e.g., LO_2/LH_2), the pumps generally are mounted on separate shafts so that each can operate at

its optimum rotational speed, as in the J-2 engine. The RL10 engine used only one turbine by gearing the LO_2 pump to the LH_2 turbopump shaft (fig. 3). This arrangement avoided the low efficiency of a small, low-speed oxidizer turbine.

Specific heat C_p and specific heat ratio γ of the turbine working fluid have a large influence on isentropic spouting velocity C_o and, therefore, on turbine design (ref. 4). As a result, two-stage pressure-compounded turbines are used for low-energy-fuel combinations (LO_2/RP-1 and N_2O_4/A-50), and two-row velocity-compounded turbines are used for high-energy hydrogen-fuel combinations (table III). Low-energy-fuel turbines that are exceptions to this rule are the Redstone A-7 and the F-1 turbines, which were two-row velocity-compounded turbines because they had low pitchline velocities. The RL10 and the planned SSME turbines are high-energy-fuel exceptions because the turbine drive cycles for these engines call for pressure ratios of only 1.4 to 1.6 and, therefore, lower isentropic spouting velocities. Section 2.1.2.6 provides additional information on turbine relationships.

2.1.1.4 TURBINE DRIVE CYCLE

The method used to drive the turbine has a direct effect on the pump headrise and power requirements and on the pressure ratio and flowrate available to the turbine for supplying the necessary power. Thus, the turbine drive cycle used on a liquid rocket engine affects the design requirements of the turbine as well as those of the propellant pumps. Figure 10 (ref. 4) shows typical flow schematics for the basic types of turbine drive cycles. If the turbine flow is in parallel with the combustion chamber (gas-generator and thrust-chamber-tapoff cycles), the pump head and power requirements are relatively low. However, if the turbine is in series with the combustion chamber (expander and staged-combustion cycles), the pressure drop across the turbine must be added to the pump discharge pressure and, therefore, the head and power requirements are high; in addition, the required pump discharge pressure is more sensitive to changes in the pump and turbine efficiencies.

To date, most rocket engines have used the gas-generator (GG) cycle (figs. 10(a) and (b)), in which the turbine working fluid is derived by combustion of the main propellants in the GG at a temperature below the turbine temperature limits. If the turbine exhaust is afterburned by the introduction of additional oxidizer, higher performance can be obtained from the GG cycle. The J-2S development engine utilizes a variation of the GG cycle called the tapoff cycle (fig. 10(c)), in which the turbine working fluid is tapped off near the face of the injector at a location where a relatively cool gas is available. In the expander (or hot-fuel tapoff) cycle (fig. 10(d)), which is used for the RL10 engine, the hydrogen that is evaporated and heated in the thrust-chamber regenerative jacket is used to drive the turbines. The turbine exhaust gas is then fed to the main chamber for combustion. In the staged-combustion cycle (fig. 10(e)), a preburner generates the turbine working fluid, which then discharges into the main combustion chamber, where the second stage of combustion occurs.

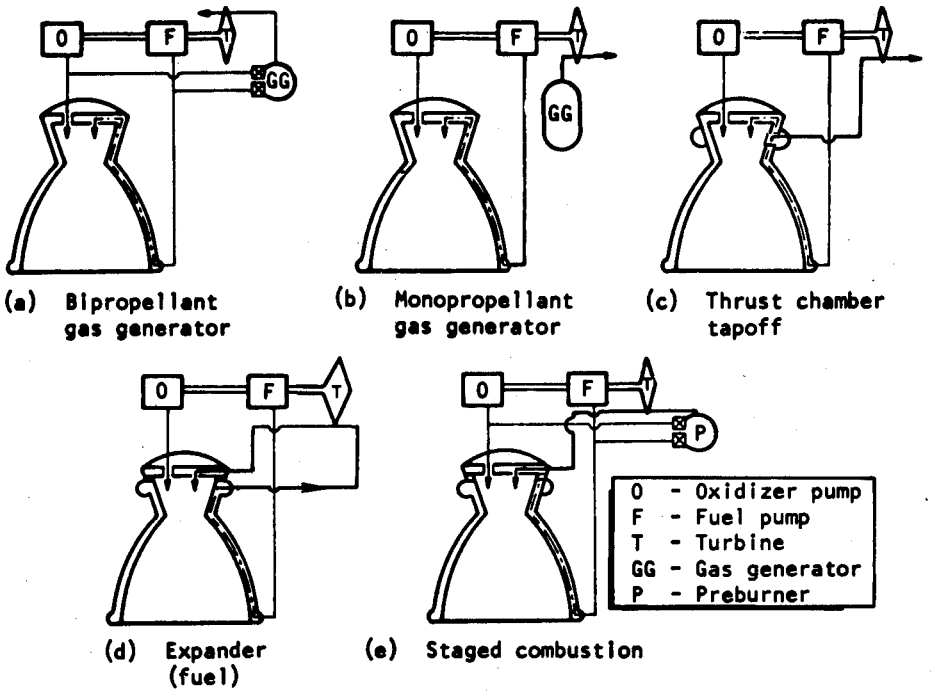

Figure 10. — Schematics of basic turbine drive cycles (ref. 4).

The general advantages and disadvantages of the basic turbine drive cycles are listed in table V; this table gives a concise comparison of the characteristics of each cycle. Table VI compares the effect of propellant combination, thrust level, performance, pressure, working-fluid temperature, throttling and mixture-ratio control, and growth potential on each of the turbine drive cycles.

For any cycle, the pump must meet the pressure and flowrate requirements of the engine, and the turbine must drive the pump within the pressure-ratio limitations imposed on the turbine by the engine system. The effects of cycle and chamber pressure on pump discharge pressure are illustrated in figure 11. In engines with GG and tapoff cycles, the chamber pressures generally are kept below 1500 psi in order to avoid the penalties of high turbine flowrates. In the expander cycle also, the chamber pressure is relatively low on account of the limited amount of heating available for the turbine working fluid prior to entering the turbine. However, for the same chamber pressure, the expander cycle requires a higher pump discharge pressure, because the turbine is in series with the combustion chamber. For the staged-combustion cycle, the chamber pressure can be as high as 3000 psi because the

Table V. – Advantages and Disadvantages of Major Turbine Drive Cycles

Cycle	Monopropellant GG	Bipropellant GG	Propellant expander	Thrust chamber tapoff	Staged combustion
General advantages	(a) Extensive experience with H_2O_2 (b) Turbine power independent of main engine operation (c) Quick response for multiple restarts (d) Good uprating capability (e) Simple throttling control	(a) Extensive experience; most frequently used (e.g., Thor, Jupiter, Atlas, Titan II, S-IC, S-IB, S-IVB) (b) Component performance insensitive to other components, i.e., little interaction (c) Good uprating capability (d) Control and operation over a wide thrust and mixture ratio range relatively easy	(a) High performance (b) Minimum components (c) Simple, reliable system (d) Clean, noncorrosive turbine working fluid	(a) Minimum components' high reliability (b) Component performance insensitive to other components; some interaction between T/C and turbine drive (c) Good uprating capability (d) Simple throttling control	(a) Maximum performance (b) Allows high chamber pressure and throttling without performance penalty
General disadvantages	(a) Low performance (b) Additional propellant system required unless one of main propellants is a monopropellant (c) Heavy and complex (d) Limited to low chamber pressures because of performance loss	(a) Low performance (except when afterburning is used) (b) Carbon buildup on turbine nozzles may occur with some fuel-rich propellant combinations (c) Additional combustor and feed system required over tapoff and expander cycles	(a) Limited in chamber pressure to approximately 1000 psia because of power available from heated fuel (b) High system pressures (c) Poor uprating capability (d) Engine performance sensitive to component design	(a) More complex thrust chamber design (b) Interaction between tapoff system and thrust chamber assembly increases development risk	(a) Requires higher pump discharge pressures (b) Limited uprating capability (c) Engine performance sensitive to component design

Table VI. – Comparison of Operational and Design Limits on Turbine Drive Cycles

Constraint \ Turbine Drive Cycle	Monopropellant GG	Bipropellant GG	Propellant expander	Thrust chamber tapoff	Staged combustion
Propellant combination	(a) H_2O_2, N_2H_4, or similar monopropellant can be used with any main propellant combination (b) Because of low performance and high weight, cycle usually is not considered unless one of main propellants is a monopropellant	(a) Can be used with any propellant combination (b) Fuel-rich GG is highest performing and noncorrosive, but carbon deposits on turbine blades and thrust chamber coolant passage walls is a major problem with some propellants	(a) Limited to systems with H_2 or light hydrocarbons as the main engine fuel	(a) Can be used with any propellant combination (b) Fuel-rich gases are highest performing and noncorrosive, but carbon deposits on turbine blades and thrust chamber coolant passage walls is a major problem with some propellants	(a) Not used with an all-monopropellant engine because there is little performance gain (b) Fuel-rich preburner is highest performing and noncorrosive, but carbon deposits on turbine blades and thrust chamber coolant passage walls is a major problem with some propellants
Thrust level	(a) Becomes less attractive with increasing thrust level of bipropellant system as performance and weight penalties increase	(a) Equally suitable for all thrust levels where turbopumps are practical	(a) System not feasible at high thrust level, as heat transferred per pound of propellant pumped decreases	(a) Equally suitable for all thrust levels where turbopumps are practical	(a) At low thrust levels and high pressure, decreasing pump efficiencies drive up pump discharge pressures
Performance	(a) Lowest-performance system when used with bipropellant main engine. Hydrazine family gives much higher performance than peroxide	(a) Low performance system. Loss in engine I_s on the order of 1/3 to 1 percent at 1000-psia chamber pressure. Loss proportional to chamber pressure	(a) No loss in engine performance due to propellant bleed. Performance advantage over other systems increases with increasing chamber pressure	(a) Performance same as bipropellant GG cycle	(a) No engine performance loss due to propellant bleed. Performance advantage over other systems increases with increasing chamber pressure
Pressure	(a) Pump discharge pressure is approximately 1.5 times chamber pressure (b) System applicable at all chamber pressures (c) Performance loss very large at high chamber pressure	(a) Pump discharge pressure is approximately 1.5 times chamber pressure (b) Cycle is equally applicable at all chamber pressures although performance loss increases with increasing pressure	(a) Pump discharge pressure is approximately 2.5 times chamber pressure (b) System limited to ≈1000-psia chamber pressure by power requirements and power available	(a) All comments for bipropellant GG cycle (b) Turbine pressure ratio available may be slightly lower than with GG	(a) Pump discharge pressure is a nonlinear function of chamber pressure and may exceed 2.0 times chamber pressure (b) Cycle has an upper limit of chamber pressure operation

(continued)

Table VI. – Comparison of Operational and Design Limits on Turbine Drive Cycles (concluded)

Constraint \ Turbine Drive Cycle	Monopropellant GG	Bipropellant GG	Propellant expander	Thrust chamber tapoff	Staged combustion
Working-fluid temperature	(a) Temperature should be as high as practical to maximize performance. Complex, cooled turbines increase performance and reduce weight	(a) Temperature should be as practical (≈1500° F with uncooled turbine and GG) to maximize performance. Cooled turbines and GG increase performance and complexity and reduce weight (b) Temperature may be dictated by coking characteristics of certain propellants	(a) Performance not affected by working-fluid temperature (b) Power balance and system pressures strongly affected by temperature (c) Temperature may be dictated by coking characteristics of certain propellants	(a) All comments for bipropellant GG system are applicable (b) Temperature may be dictated by coking characteristics of certain propellants	(a) Performance not affected by working-fluid temperature (b) Power balance, system pressures, and maximum chamber pressure are strongly affected by temperature. Temperature should be as high as practical to minimize system pressures, maximize chamber pressure (c) Temperature may be dictated by coking characteristics of certain propellants
Throttling and mixture-ratio	(a) Control of four valves required (b) Turbine bypass used for deep throttling to minimize GG injector throttling and GG control complexity (c) Performance loss with throttling highest of cycles	(a) Simultaneous control of main propellant gas generator valves may be required (b) Turbine bypass used for deep throttling to minimize gas generator injector throttling and GG control complexity (c) Excess turbine flow in deep-throttled condition and additional injector pressure drop at nominal condition increase turbine flow and performance loss	(a) Simultaneous control of turbine flow and oxidizer valves required (b) Low PR unchoked turbines provide coupling for possible feed system and combustion instability (c) No performance loss with throttling (d) Very high fuel system ΔP and fuel pump discharge pressure required for deep throttling	(a) Simultaneous control of main propellant valves required, no bypass (b) Thrust chamber must provide acceptable tapoff gas over wide throttle range for deep throttling (c) Performance loss (for throttling capability) at nominal conditions (on the order of 0.5 to 1.0 sec) same as GG cycle, lower in throttled condition (no excess flow)	(a) Control of five valves required (b) Low-PR unchoked turbines provide coupling for possible feed system and combustion instability (c) Very high preburner injector ΔP or complex injector design required for deep throttling (d) No performance loss with throttling
Growth potential	(a) Easily uprated if monopropellant storage is sufficient	(a) Easily uprated, flexible system	(a) Limited uprating capability. Limited by heat-transfer rate	(a) Easily uprated, flexible system	(a) Limited uprating capability. Cycle generally operated near maximum chamber pressure for maximum performance

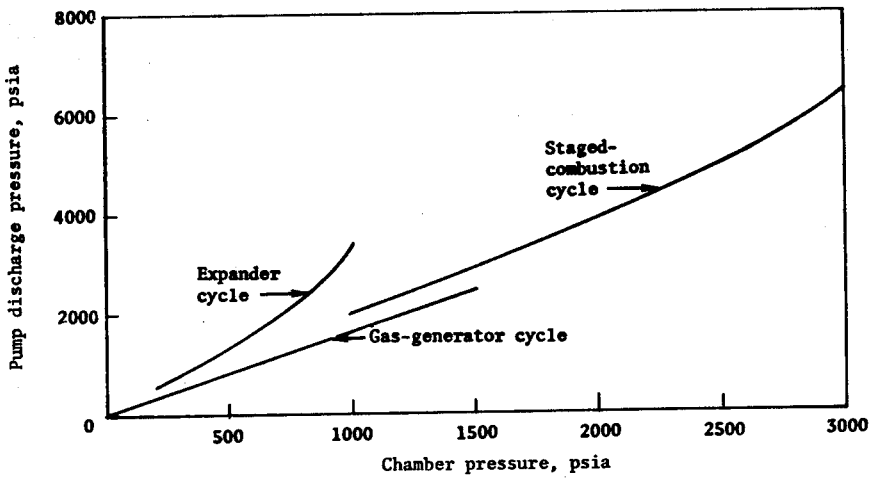

Figure 11. – Effect of drive cycle and chamber pressure on pump discharge pressure (oxygen/hydrogen engine, mixture ratio = 6).

preburner provides high-energy fluid for the turbine; 3000 psi is an approximate upper limit for this cycle because, for given values of turbine inlet temperature and turbopump efficiency, the required pump discharge pressure rises steeply at higher values (fig. 11). Allowing for pressure drops in the lines, regenerative jacket, preburner, turbine, and injector, the resultant required discharge pressures can be as high as 7000 to 8000 psia.

For GG and tapoff cycles, turbine pressure ratios of approximately 20 are required to minimize the flowrate of turbine working fluid and thereby maximize the engine specific impulse. For the expander and staged-combustion cycles, the optimum turbine pressure ratios are generally less than 1.5, because of the large quantities of turbine working fluid available. In design, expander and staged-combustion cycle turbine pressure ratios are minimized in order to maximize chamber pressure and minimize turbopump weight, thereby minimizing engine weight (sec. 2.1.1.7). Some of the differences between these cycles are illustrated by comparing the J-2 engine, a GG cycle, and the RL10 engine, an expander cycle. For these engines, the chamber pressures are 787 and 400 psia, respectively; the ratios of fuel pump discharge pressure to chamber pressure are 1.6 and 2.5; and the overall turbine pressure ratios are 19 and 1.4.

Relative to GG cycles, turbopump weight and horsepower generally are somewhat greater for expander cycles and are much greater for staged-combustion cycles; these differences result from differences in the pump discharge pressure requirements. To meet the high efficiency requirements, pumps in expander and staged-combustion cycles must either

operate at higher speed or have more stages than those in GG cycles. To meet the turbine pressure-ratio requirements, GG and tapoff cycles generally incorporate two-row velocity-compounded turbines, and expander and staged-combustion cycles generally incorporate either two-stage pressure-compounded or reaction turbines.

2.1.1.5 THROTTLING RANGE

In some future applications such as main engines for reusable vehicles and accumulator-fed auxiliary propulsion systems, the engine thrust may be varied (throttled) during the mission. As a result, the turbopumps will be required to operate over a range of head and flow values (fig. 12).

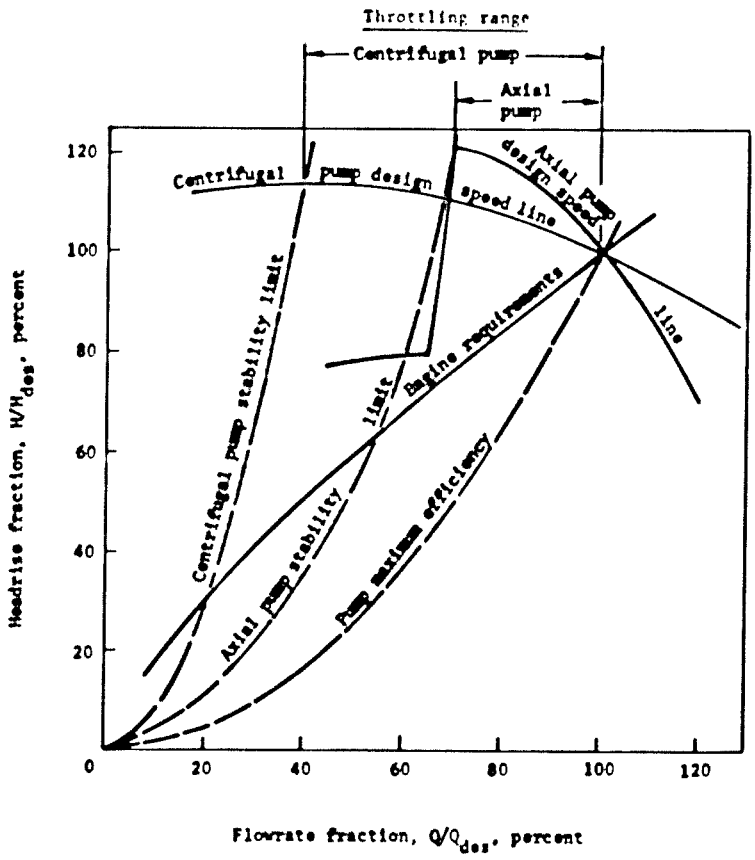

Figure 12. – Headrise and flowrate limits to pump throttling.

Pump throttleability is limited, because a rocket-engine/pump combination can become unstable if the slope of the constant speed lines on the pump H-Q map are positive (ref. 11). Therefore, for centrifugal pumps, which generally have discontinuity-free speed lines, the zero-slope point is generally considered the stability limit (fig. 12). For axial pumps, the stability limit occurs when the head drops abruptly or, in other words, when the pump stalls. Relative to the engine, the throttling limit occurs when the engine operating line, which is primarily linear, crosses the pump stability line. Consequently, pump throttleability improves as the flowrate fraction at the stability limit decreases or, in other words, as the stability-limit line moves to the left relative to the design point.

For centrifugal pumps, the throttling capability increases as stage design head coefficient decreases and, for sweptback impellers with a constant discharge blade angle, stage design head coefficient decreases as stage specific speed increases (ref. 12). Consequently, centrifugal pump throttling capability generally increases with stage specific speed (fig. 13) and, therefore, with pump design rotational speed. As shown, stable throttling is possible down to zero flow if the specific speed is above approximately 2500. However, heating of the trapped propellant makes operation at complete shutoff inadvisable except for very short durations (< 10 sec.). For axial pumps, rotational speed has little effect on throttleability. As shown in figure 12, centrifugal pumps generally have approximately twice the throttling range of axial pumps and therefore are primary candidates for throttleable engines.

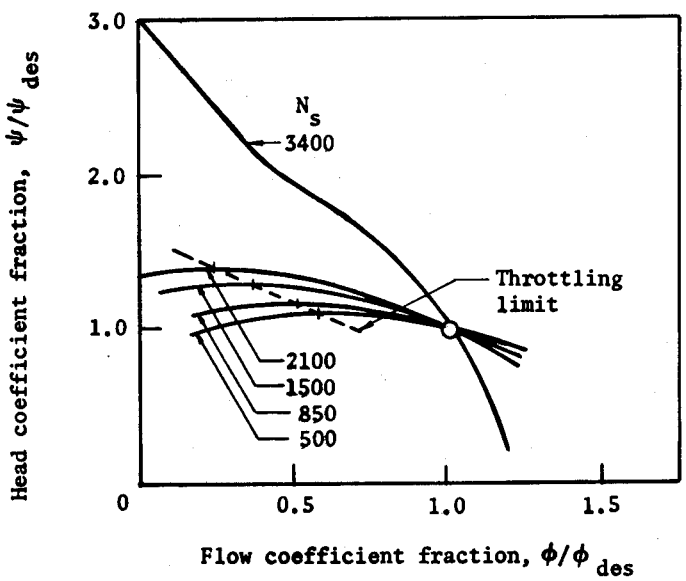

Figure 13. – Effect of stage design specific speed on throttling characteristics of centrifugal pumps with sweptback impeller blades.

2.1.1.6 EFFICIENCY

High turbopump efficiency (the product of the pump and the turbine efficiencies) is important to all types of pump-fed liquid rocket engines. It is important for engines with GG or tapoff cycles because engine specific impulse increases with decreasing flowrate of turbine working fluid. For engines with expander or staged-combustion cycles, increasing the turbopump efficiency increases the chamber pressure attainable for a given pump discharge pressure (fig. 14). This increase in chamber pressure makes it possible to reduce the size and weight of the thrust chamber and, therefore, of the engine.

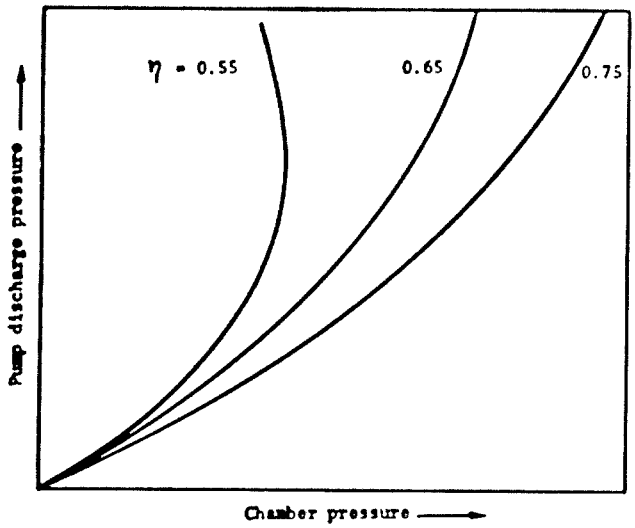

Figure 14. – Effect of turbopump efficiency on pump discharge pressure vs chamber pressure requirements (staged combustion cycle).

In current engines, overall turbopump efficiencies in general range from 35 to 48 percent (table I). As shown, the SSME now under development will have turbopump efficiencies approaching 60 percent. High-specific-speed pumps and reaction turbines are required to meet this goal.

Figure 15, a plot of pump efficiency vs specific speed, illustrates the relation between efficiency and stage design for a centrifugal pump. For a given value of inducer design inlet tip flow coefficient $\phi_{I t I}$ (ratio of fluid axial velocity at the inlet to blade tangential velocity), centrifugal pump efficiency increases with increasing speed until it reaches a maximum value, then decreases as stage specific speed increases (refs. 2, 12, and 13). Stage specific speed at maximum efficiency ranges from 1300 at $\phi_{I t I}$ = 0.05 to 2500 at $\phi_{I t I}$ =

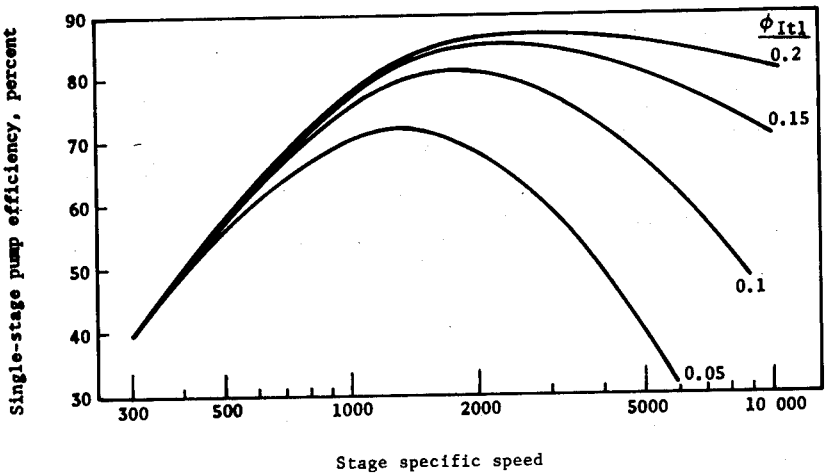

Figure 15. – Effect of centrifugal pump stage specific speed on pump efficiency (impeller tip diameter > 10 in.).

0.20. Consequently, if a pump has a design stage specific speed that is less than that at the maximum efficiency and has a constant number of stages, an increase in design speed will increase efficiency.

With axial pumps, the efficiency will decrease as the stage specific speed is decreased below 2000. At these low specific speeds, the blade heights become very small in relation to the rotor diameter, and consequently the blade tip clearance becomes a significant fraction of the blade height. Above a stage specific speed of 2000, axial-pump stage efficiencies remain at high levels up to specific speeds of 10 000 (refs. 12 and 13) (fig. 15 for $\phi_{It1} > 0.20$). Consequently, if an axial pump has a stage specific speed less than 2000 and has a constant number of stages, the efficiency increases with increasing design rotational speed. Above 2000, changes in design rotational speed do not have much effect on axial-pump efficiency.

For high-flowrate high-horsepower turbines, rotational speed has little effect on turbine efficiency, because the turbine can be full admission with a reasonable blade height. For given values of working fluid inlet temperature and turbine pressure ratio, turbine efficiency is primarily a function of pitchline velocity. For this reason, many rocket engine turbines are designed with pitchline velocities close to the rotor stress limit.

For engines requiring turbines of low horsepower, full-admission turbines are inefficient, because they have such small blade heights that the tip clearances are a significant fraction of the blade height. In this case, partial-admission turbines are used (refs. 14, 15, and 16).

For example, a partial-admission turbine is used on the YLR81-BA-11 engine (table III). The efficiency of this kind of turbine increases with arc of admission, arc of admission increases with decreasing diameter, and diameter in turn decreases with increasing rotation speed. Therefore, for low-thrust-level engines, turbine efficiency increases with design rotational speed. More detailed information on turbine efficiency is contained in section 2.1.2.6.

2.1.1.7 WEIGHT AND SIZE

Light weight is an important turbopump design requirement because of the direct effect on payload. Size is minimized so that handling and mounting are simplified. Weight and size are directly related to the turbopump design speed. An increase in the design speed decreases the diameters of both the pump and the turbine, because the allowable tip speeds, which are set by stress-limiting factors and the discharge-pressure requirements of each component, are essentially constant for a given application. To maintain proper geometrical relationships, the turbopump length also will decrease. Consequently, both the turbopump envelope and the turbopump weight decrease with increased rotational speed.

Turbine efficiency can be increased by using a large number of stages. However, multistage turbines are heavier and longer because of the added rotors and nozzles and because the added rotating mass must be supported by an outboard bearing that, in turn, must have added supporting structure.

2.1.1.8 CONDITIONING

If a pump for cryogenic propellants is not properly chilled prior to start, the propellants will flash into vapor on entering the pump, and the pump will become vapor locked. Another consequence is that the turbopump bearings will not be lubricated or cooled and thus will be in danger of failure. Therefore, applications with cryogenic propellants require either some way of prechilling the pump or a pump surface that chills very rapidly. These requirements also exist for restart applications with cryogenic propellants because, during the engine shutdown period, heat soaks back from the hot turbine to the cold pump and, if the shutdown time is long enough, the pump can reach temperatures as high as 0° to 100° F. The development of upper stages employing cryogenic propellants (e.g., the Saturn S-II stage, the Saturn S-IVB stage, and the Centaur stage) has provided solutions to the problem of turbopump conditioning. The solutions were particularly important for the Saturn S-IVB stage (J-2 engine) and for some Centaur stages (RL10 engine) because the engines must restart.

In the Saturn S-IVB stage, both the oxygen and the hydrogen feed systems include coolant loops for turbopump chilldown. Electrically driven secondary pumps force propellants from

the tanks through the inlet lines and the pumps. Return lines connected from the pump discharges then permit the heated propellants to return to the tanks. This system has performed satisfactorily. However, propellant can be consumed during chilldown (because the returned heated propellant can cause additional tank venting), the restarts are by no means instantaneous, and the added complexity of the secondary pumps, lines, and valves is undesirable.

The loss of chilldown propellant and the chilldown time can be reduced by coating the surfaces wetted by pumped fluid with an insulating material and, with hydrogen, by increasing the two-phase pumping capability (ref. 17). Analytical and experimental studies indicate that a thin layer of low conductivity material applied to a metal surface will make possible a rapid surface chill and will reduce the heat rejection rate from the main body of the metal (ref. 17). Two-phase pumping capability can be improved by designing the inducer with a high ratio of fluid incidence angle to blade angle, minimum blade blockage, and a large inlet annulus area. Boost pumps, having low tip speeds and large inlet diameters, can further increase the vapor pumping capacity (sec. 2.2.1.1).

The chilldown problem can be made less severe by minimizing the rate of heat soakback (ref. 17). To this end, the number and size of the contact points between the turbine and the pump are minimized, and the remaining contact points are insulated (sec. 2.2.4.6); in addition, the turbine mass relative to the pump mass is minimized by using single-stage turbines rather than multistage turbines and by using smaller diameters and lower turbine inlet temperature. However, reducing the diameter and the temperature will adversely affect performance.

Geared and single-shaft turbopumps are suited to restart applications because, in both cases, one turbine rejects heat to two pumps, thereby producing lower pump temperatures. In addition, for single-shaft turbopumps, one pump insulates the turbine from the other pump and, for geared turbopumps, the gearbox insulates the turbine from both pumps and provides an additional heat sink.

2.1.1.9 LIFE, RELIABILITY, AND COST

The prime objective in the optimization and design of a new rocket engine system is to minimize the cost per pound of payload while meeting the mission reliability requirements. The turbopump plays an important part in this optimization process. The turbopump cost can be reduced by designing for low rotational speed, state-of-the-art components, and the minimum number of pump and turbine stages. The reduced complexity minimizes assembly, manufacturing, and maintenance costs. In addition, the amount of development required to attain a given reliability is reduced. Low-speed designs also may have a built-in uprating capability so that redesign is not necessary each time the thrust requirement increases. In

general, however, modifications aimed at low cost will increase turbopump system weight, decrease performance, and can produce a net increase in cost per pound of payload. Therefore, an optimum turbopump system exists for each application. The design rotational speed at this optimum is a function of the mission, the number of engines produced, and other parameters such as the reliability goal and engine reuse.

A compromise on rotational speed was made for the J-2 hydrogen turbopump (table II). The number of pump stages and the weight could have been reduced by designing at a higher speed. However, the resulting higher values of bearing DN and seal rubbing velocity would have required greater development costs to meet the life and reliability requirements. Therefore, the speed was limited to 27 000 rpm. Another example of a design compromise to obtain greater reliability is the F-1 turbopump, in which both pumps are mounted on the same shaft as the turbine. This arrangement increased reliability by eliminating the gearbox. However, relative to the geared turbine arrangement (e.g., the MB-3 and MA-5 turbopumps), the fuel pump inlet pressure requirements are higher because, with the turbine mounted on one end, the fuel pump inlet could no longer be axial.

In general, designing for increased life will increase the weight. Design procedures for increasing life include designing at relatively low speeds, avoiding resonant frequencies, using low stress levels to avoid fatigue limits, using low turbine temperature, and using low values of inducer inlet incidence angle and inducer tip speed to reduce cavitation erosion. Information on designing to obtain the desired life in turbopump system components is presented in references 1 through 10.

2.1.2 Selection of System Type

In the selection of system type, the various system requirements are used to select the best turbopump components and system. Optimization is often necessary because some of the requirements are conflicting. Even after optimization, many decisions are still not obvious, and design judgment must be exercised.

2.1.2.1 NUMBER OF UNITS

Headrise and flowrate requirements can be met either by a single turbopump or by two or more turbopumps, each delivering a fraction of the total flowrate. If more than one pump is to be considered, then both R&D (research and development) and production costs must be considered in the selection of turbopump size. Research and development costs increase with size because of the increased hardware costs, increased propellant costs, and higher test facility costs. Production costs for an individual unit will also increase with size; however, for a constant flow, two pumps, each pumping one-half the flow, usually will cost more than one pump that is pumping all the flow.

Research and development costs and unit production costs are determined as a function of size. A production learning curve is used to obtain average production costs for various numbers of production units. Typically, an equivalent 93-percent learning curve is used (a 93-percent learning curve reduces the average cost per unit by 7 percent for each doubling of the number of units). Total production costs are then determined for constant total flow for various size turbopumps by multiplying the average unit cost by the number of units required to give the total flow. Total costs are obtained by adding the R&D and production costs. Size can then be selected on the basis of minimum costs.

For low production rates, total costs will be minimal at small pump sizes, because the R&D costs will be predominant for this type of requirement. As the production rate increases and production costs become the predominant cost factor, the minimum costs will occur at larger and larger pump sizes.

2.1.2.2 TURBOPUMP EQUIVALENT-WEIGHT FACTOR

The best-performing turbopump is the one that results in the heaviest payload for a vehicle with given values of thrust level, mission velocity increment, gross weight, and specific impulse. Because the turbopump weight is part of the stage burnout weight, a reduction in turbopump weight allows an increase in the vehicle payload. In addition, a decrease in turbine flowrate for a GG cycle increases the vehicle payload by increasing the engine overall specific impulse. This effect occurs because the turbine exhaust for a GG cycle has a specific impulse lower than that of the thrust chamber exhaust.

The equivalent weight factor EWF is used to convert turbine flowrate to payload and is expressed in pounds of stage payload per pound per second of turbine flowrate:

$$(EWF)_{TP} = \frac{\partial PL}{\partial (I_s)_E} \left[1 - \frac{(I_s)_{T2}}{(I_s)_E} \right] \frac{(I_s)_E^2}{F} \tag{2}$$

where

$(EWF)_{TP}$ = turbopump equivalent weight factor, lbm/(lbm/sec)

PL = stage payload, lbm

$(I_s)_E$ = engine specific impulse, lbf-sec/lbm

$(I_s)_{T2}$ = turbine exhaust specific impulse, lbf-sec/lbm

F = engine thrust, lbf

$\frac{\partial PL}{\partial (I_s)_F}$ = f (mission velocity increment, system gross weight, system specific impulse, and stage propellant fraction)

For GG cycles, EWF ranges from 5 lbm/(lbm/sec) for booster engines to 200 lbm/(lbm/sec) for upper-stage engines (ref. 18). For staged-combustion cycles, $(I_s)_{T2} = (I_s)_F$, and therefore the corresponding EWF is essentially zero.

The total effect of the turbopump on stage payload is determined by adding the turbopump weight to the product of EWF and the turbine weight flowrate. The sum is the turbopump equivalent weight:

$$(EW)_{TP} = W_{TP} + (EWF)_{TP}(\dot{w}_T) \tag{3}$$

where

$(EW)_{TP}$ = turbopump equivalent weight, lbm

W_{TP} = turbopump weight, lbm

$\dot{w}_T$ = turbine weight flowrate, lbm/sec

This equivalent weight can be reduced by decreasing either the turbopump weight or the turbine flowrate. Turbine flowrate, in turn, is decreased by increasing turbopump efficiency, turbine inlet temperature, and turbine pressure ratio. For the staged-combustion cycle, turbine inlet temperature and turbopump efficiency have a direct effect upon engine weight and delivered payload. High turbine and pump efficiencies will reduce the required pump discharge pressure and reduce the engine system weight. High turbine inlet temperature (within the capabilities of the turbine materials) also will decrease the required pump discharge pressure and reduce engine weight.

2.1.2.3 ROTATIONAL SPEED

Design speed has more influence on turbopump system design than any other single parameter. It influences all the turbopump design requirements and in addition affects the selection of the turbine, the pump, and the turbopump configuration. Selecting the value for speed that is the best compromise among all the important factors is perhaps the most complex decision facing a turbopump system designer.

To select the speed, its effect on each of the design requirements must be known. These various effects can then be weighed, and the decision can be made. The effects must be considered carefully because, if the speed is too low, the weight will be too high, and the turbopump efficiency and consequently the engine specific impulse will be too low. As a result, the vehicle might not meet the payload requirements. On the other hand, if the speed is too high, the resulting turbopump may not meet the reliability and life requirements. This failure would result in a costly and time-consuming development effort to modify the hardware and then prove that the modification was effective.

In the process of increasing rotational speed to improve vehicle performance, several mechanical and hydrodynamic speed limitations may be encountered (sec. 2.2.1). Figures 8 and 9 illustrate these limits for a given propellant as a function of pump flowrate and headrise. As shown in figure 16, the turbopump configuration must be modified in order to exceed each of these speed limits and achieve successful operation at a higher speed. For example, if the speed is limited to 13 000 rpm, the turbopump will not require any special components, will weigh 800 lbm, and will have a pump efficiency of 67 percent. If the speed is increased to 27 000 rpm, the weight decreases to 500 lbm and the efficiency increases to the maximum value of 77 percent. However, this design requires a preinducer and an outboard turbine bearing that, in turn, requires an additional seal and provisions for cooling; it might be better to design at 18 000 rpm and settle for 600 lbm and 74 percent. On the other hand, if weight is critical, it may be desirable to design at speeds above the maximum-efficiency value of 27 000 rpm. The upper limit is the speed at which the benefit of the decreasing weight is balanced by the penalty of the decreasing efficiency or, in other words, it is the speed at the optimum payload (sec. 2.1.2.2).

In some cases, a turbopump with a different type of component is also a potential candidate. For example, a two-stage pump for the application on figure 16 would have a different stage specific speed and, therefore, from figure 15, would have an efficiency characteristic different from that in figure 16. Consequently, a thorough speed optimization often requires analysis of several turbopump configurations, each with its own pump type and turbine type.

2.1.2.4 TURBOPUMP ARRANGEMENT

The term "turbopump arrangement" refers to the physical relation of the pumps and the turbines for both the fuel and the oxidizer (fig. 17). The arrangement has a strong effect on vehicle payload because it influences the weight and the speeds (and, consequently, the efficiencies) at which the various components can operate. However, it is rather difficult to generalize on the best arrangement because, as shown in figure 17, there are many options. In addition, the selection is influenced by a number of factors, including prior experience and current technology. For example, a gear drive might have been necessary 10 years ago

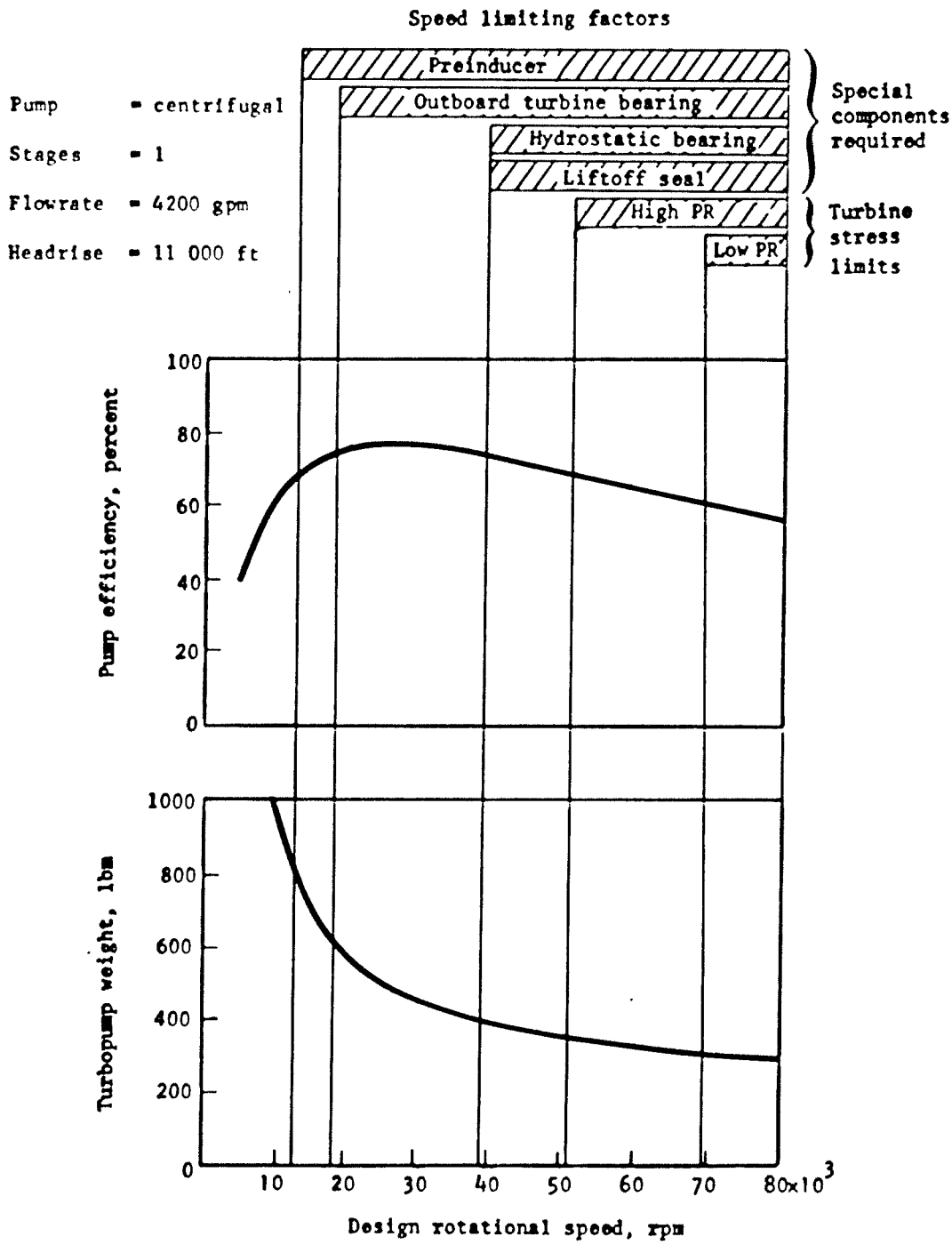

Figure 16. – Effects of rotational speed on required configuration for a LOX turbopump.

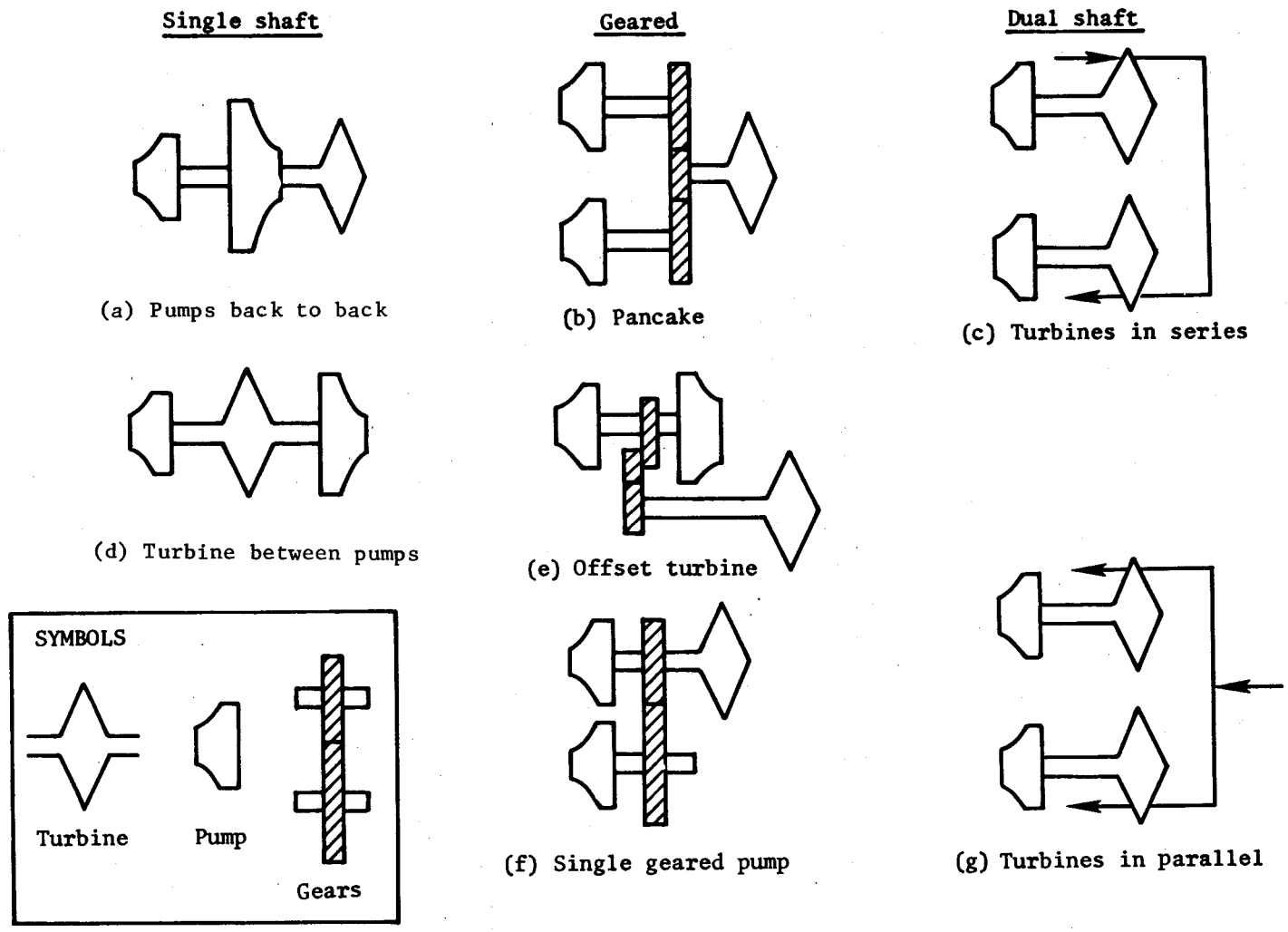

Figure 17. — Schematics of basic turbopump arrangements.

because of a lack of technology for dealing with cavitation, whereas today more advanced technology would permit an entirely different selection.

If the propellant densities are similar (e.g., LOX/RP-1), the single-shaft arrangement (figs. 17(a) and 17(d)) offers the advantages of less complexity and less weight because it requires only one turbine. Within this category, the turbine may be mounted on one end (fig. 17(a)) as in the F-1 engine (fig. 6) or mounted between the pumps (fig. 17(d)) as in the A-7 engine.

In some cases, the single-shaft arrangement results in a turbine that has very short blades or a disproportionately large diameter or both. In this event, the two pumps may be placed on the same shaft and the turbine placed on a separate shaft that is geared to the pump shaft (fig. 17(e)). This arrangement permits the turbine to operate at a higher rotational speed, thereby alleviating the problems of blade height and diameter. The MA-5 booster (fig. 4) and sustainer engines and the YLR-91-AJ-7 engine utilize turbopumps of this type. The YLR87-AJ-7 (fig. 5) engine and the YLR81-BA-11 engine utilize the "pancake" arrangement (fig. 17(b)) in which each pump is geared separately to a single turbine. This configuration permits optimum rotational speeds for each of the three turbopump components.

For small hydrogen-fueled upper-stage engines, the single geared turbopump (fig. 17(f)) can be used to avoid the efficiency penalty of having too small an arc of admission in the oxidizer turbine. The RL10 engine utilizes this arrangement.

In the dual-shaft arrangement (figs. 17(c) and 17(g)), each pump can be designed at its optimum speed and, therefore, the overall pump efficiency will be higher. This is particularly true for hydrogen/oxygen engines where the propellant densities are very different. Within this dual-shaft category are two turbine drive arrangements: series turbines (fig. 17(c)), and parallel turbines (fig. 17(g)). Series turbines permit the initial turbopump to rotate faster and reduce the turbine flowrate requirements by permitting a larger overall turbine pressure ratio. The J-2 and J-2S engines utilize this arrangement.

The dual-shaft parallel-turbine arrangement has great flexibility for off-design operation such as starting, throttling, and making mixture-ratio excursions; in addition, it eliminates the problem of separating the liquid propellants and simplifies turbopump system development. This arrangement is also efficient because advances in bearing, seal, and cavitation technology in combination with increases in headrise requirements have made it possible to run the pump at the same speed as the turbine. The experimental X-8 engine (ref. 19) utilized parallel turbines, and this arrangement is used in the SSME now under development.

2.1.2.5 PUMP CONFIGURATION

A rocket engine pump receives propellant at low pressure so that propellant tanks can be lightweight and delivers the propellant at high pressure so that it can flow into the high-pressure combustion chamber. Pumps are divided into two basic categories: (1) positive-displacement pumps, in which fluid is forced into a high-pressure region by reducing the volume of a chamber that is momentarily sealed off from a low-pressure region, and (2) nonpositive-displacement pumps, in which the fluid pressure is raised by alternately adding and diffusing the kinetic energy. As shown in figure 18, the design specific speeds for nonpositive-displacement pumps (axial, centrifugal, Barske, Tesla, Pitot, and drag)* are generally higher than those for positive-displacement pumps (Rootes, vane, and piston)*, the axial and centrifugal pumps having the highest values. Up to the present time, almost all rocket engine pumps have been either axial or centrifugal because the pump specific speeds (eq. (1)) for rocket engines are high. The high speeds are necessary because of the high

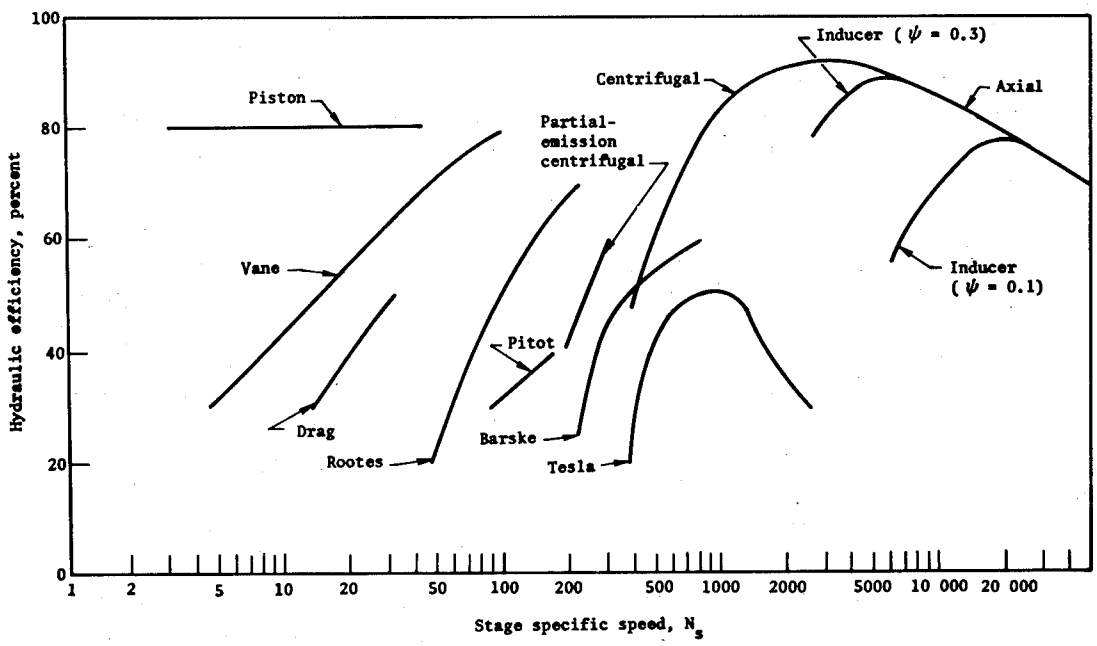

Figure 18. – Efficiency vs stage specific speed for various types of pumps.

*Pumps named are described briefly in Appendix B; sketches of the pumps appear on figure 20. Detailed information on these pumps is given in reference 20.

flowrate requirements and the high rotational speeds required to minimize turbopump weight. Pumps other than axial or centrifugal become more competitive when flowrates are of the order required for engine thrust levels less than 5000 lbf. Since almost all pump-fed rocket engines have been larger than this (table I), the pump selection for engine thrust greater than 5000 lbf will be discussed first.

For large engines (F > 5000 lbf), centrifugal pumps have been used for all propellants other than hydrogen because they are simple and flexible and, in relatively dense propellants, are able to meet the head requirements efficiently in a single stage. However, the low density of hydrogen requires overall pump headrise so high that multistaging is necessary to obtain a stage specific speed sufficient for high efficiency (fig. 15). For this reason, the RL10 engine uses a two-stage centrifugal hydrogen pump and the J-2 engine uses a seven-stage (plus one inducer stage) axial hydrogen pump. Another reason for multistaging hydrogen pumps is that, for pump discharge pressures greater than 2000 to 2500 psi, the tip speeds for single-stage pumps would exceed the allowable stress limits for existing materials. A three-stage pump has been designed for the SSME high-pressure-hydrogen application in order to meet both the efficiency requirement and the tip-speed limitation.

In the preliminary design of a single-stage centrifugal pump for propellants other than hydrogen, the inducer inlet tip flow coefficient ϕ_{1t1} must be selected such that it provides the best compromise between efficiency and NPSH requirements. Increasing the flow coefficient increases the efficiency (fig. 15) but decreases the suction specific speed (sec. 2.2.1.1) and therefore increases the NPSH requirement. This problem can be eliminated if the added complexity of a preinducer (boost pump) can be tolerated. To permit high-speed operation (above the peak-efficiency specific speed, fig. 15) without suffering efficiency or NPSH penalties, a double-entry impeller can be used. Impellers in liquid-oxygen pumps usually are shrouded in order to obtain high efficiency with the large clearances required to avoid rubbing against the housing.

For hydrogen, the preliminary design involves selecting the inducer inlet flow coefficient and the number of stages and resolving the axial versus centrifugal question. For a pump specific speed (based on pump head rather than stage head) of 1000, the effects of these variables on engine throttling ratio and pump efficiency are illustrated in figure 19. If throttling to low thrust levels (high throttling ratio) is required, a centrifugal pump is the primary candidate because axials cannot be throttled much beyond 2 to 1. As discussed above, the more efficient high-flow-coefficient designs require more NPSH. The use of inducers with low inlet flow coefficient has less effect on the efficiency of axial pumps than on that of centrifugal pumps because the inducer flow coefficient affects only one stage and axial pumps have more than one stage.

Another factor that influences hydrogen-pump design is the impeller tip-speed limit. The approximate tip-speed limits are 2800 ft/sec for unshrouded titanium centrifugal impellers, 2000 ft/sec for shrouded titanium centrifugal impellers (1700 to 2300 ft/sec, depending on

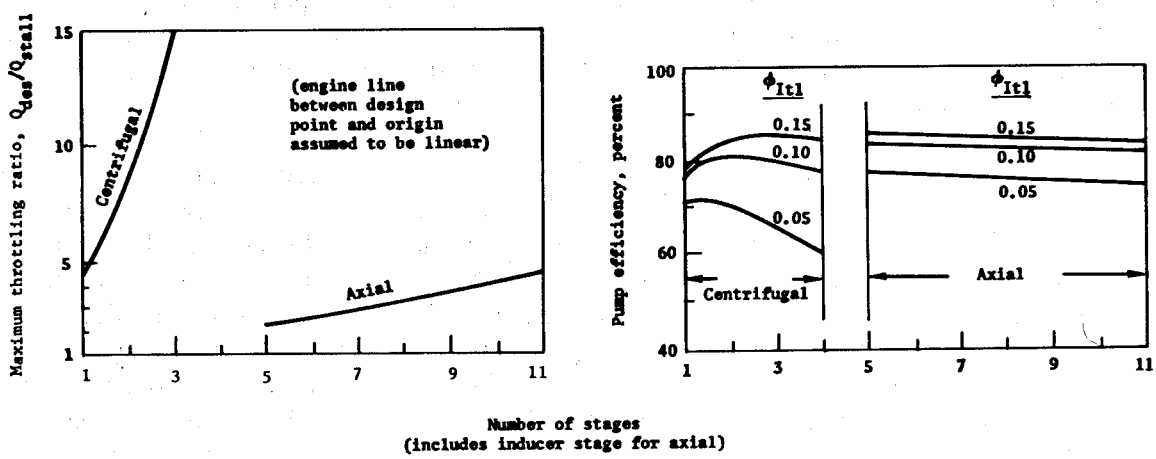

Figure 19. – Estimated effect of pump configuration on efficiency and engine throttling for a pump specific speed of 1000.

design specific speed, amount of blade sweepback, blade height, method of shroud attachment, hole in the center, etc.), and 1500 ft/sec for titanium axial rotors (sec. 2.2.2.3). These tip-speed limits and parametric analyses similar to those illustrated in figure 19 form the basis for hydrogen-pump selection. For example, assume a headrise of 200 000 ft (approximately 7000 psi in liquid hydrogen), an overall pump specific speed of 1000 to correspond to figure 19 (which means a constant rotational speed set by one of the rotational speed limits), a pump inlet flow coefficient of 0.15, and a centrifugal pump to meet a wide throttling range (> 2); then 1-, 2-, and 3-stage pumps would have tip speeds of 3300, 2300, and 1900 ft/sec and efficiencies of 78, 84, and 86 percent, respectively. A comparison with the impeller limits indicates that a single-stage pump would be impossible because the tip speed would far exceed the tip-speed limit for an unshrouded titanium impeller. The tradeoff then becomes one between a two-stage unshrouded pump and a three-stage shrouded pump. The unshrouded two-stage machine would have fewer parts and simple crossover tubes to carry the flow from the first-stage discharge to the second-stage inlet. However, it would be heavier due to the larger diameter and to the heavier housing required to minimize housing deflections that would cause excessive leakage losses at the impeller blade tip; reference 21 shows the effect of blade tip clearance on the efficiency of an unshrouded centrifugal pump. The shrouded three-stage machine would be more efficient and easier to balance for axial thrust. However, the three stages would make a nose-to-back arrangement necessary to avoid sealing problems and to avoid extremely complex ducting between the discharge of one stage and the inlet of the next. In this case, the selection probably would be based on engine-system performance analyses and fabrication capabilities. Analytical studies for the SSME high-pressure liquid-hydrogen pump

demonstrated that the three-stage configuration had an efficiency advantage of 6 to 7 percentage points over the two-stage, because the pump specific speeds were about half of those shown in figure 19. This made the selection of a three-stage more obvious than that in the above illustrative example where the advantage was only 2 percentage points.

For low-flow applications ($F < 5000$ lbf), the pump clearances, tolerances, and flow-passage heights become smaller, and manufacturing becomes more difficult. To stay within manufacturing limits, the rotational speed must be held essentially constant as flowrate is decreased below a given minimum level. As a result, the pump design specific speeds decrease and low-specific-speed designs such as Barske, Pitot, vane, and piston pumps become more attractive. The regions of application for some of these low-specific-speed candidates are shown in figure 18. Also, to obtain reasonable blade heights and efficiencies for the turbines, partial-admission or geared turbines or both become necessary at low flowrates. These turbopump configurations are less efficient than higher flowrate designs, and consequently the turbine flowrate penalty is greater for small engines.

The subject of low-flowrate limits for pump-fed systems is well explored for rotating pumps (ref. 13). The pumping action of the rotor and the losses in the pump flow path are interrelated with the similarity parameters N_s (defined in equation (1)) and D_s, specific diameter, defined by

$$D_s = \frac{DH^{1/4}}{Q^{1/2}} \tag{4}$$

where

D_s = specific diameter, $ft^{5/4}/gpm^{1/2}$

D = impeller diameter, ft

Thus, the pump efficiency becomes a unique function of N_s and D_s; its maximum value for given N_s and D_s can be determined by differentiating the equations for the interrelations between losses and geometry and solving for the geometry that yields the minimum losses for given operating conditions ($N_s - D_s$ values). This procedure is best performed by high-speed digital computers (ref. 13). The resulting data can then be presented in the form of $N_s - D_s$ diagrams (fig. 20) in which lines of constant efficiency and lines of constant geometrical parameters (representing the pump geometry) are plotted as functions of specific speed and specific diameter. The validity of the calculated data depends only upon the accuracy of the functions used to interrelate losses with pump geometry. The data presented for high N_s values at the right-hand side of figure 20 show that axial pumps attain highest efficiencies at high specific speeds and that decreasing values of the hub ratio $\nu = D_{h1}/D_{t1}$ are desired for increasing specific speeds. Centrifugal pumps cover the medium-specific-speed regime efficiently; increasing values of the rotor diameter ratio $\delta =$

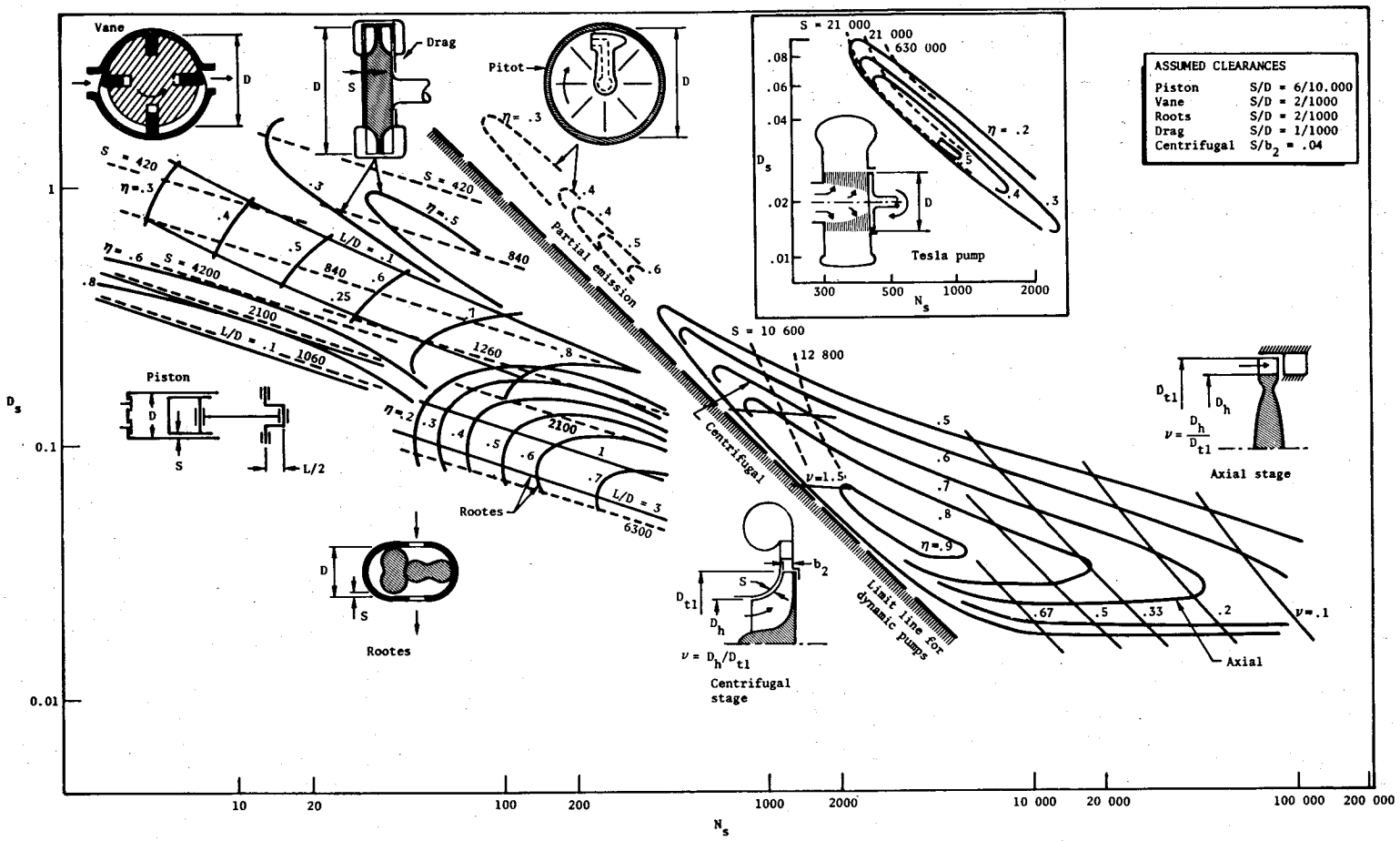

Figure 20. – N_s – D_s diagram for various kinds of pumps (ref. 13).

D_{t1}/D_{t2} are desired with decreasing specific speeds. In the low-specific-speed regime, partial-emission pumps and Pitot pumps offer the highest efficiency potential. Another pump type, the Tesla pump, offers a fair efficiency potential in the medium-to-low specific speed regime. In single-stage rotating pumps, the head coefficient has certain limiting values and is directly interrelated with specific speed and specific diameter. The limit for the application of rotating pumps is indicated by the dashed line in figure 20.

The wear-ring and tip clearances can become disproportionately high as conventional pumps are scaled down in size. Thus, losses resulting from wear-ring and blade-tip clearance leakage are likely to be large for small pumps. Pump types that share this problem are the conventional centrifugal (open or shrouded impeller or partial emission), Barske, drag, and Tesla (although the latter two types do not have the wear-ring-clearance problem).

2.1.2.6 TURBINE CONFIGURATION

The turbine receives working fluid at high temperature and pressure, converts the energy in the fluid to mechanical energy, and exhausts the spent fluid at lower temperature and pressure. The mechanical energy is delivered to the turbopump shaft where it is used to drive the pump. The turbine must remove the maximum amount of energy from each pound of working fluid; thus for GG and tapoff drive cycles the turbine flowrate is a minimum, and for topping and expander drive cycles the turbine pressure ratio is a minimum. At the same time, the turbine must not impose an unacceptable weight penalty on the turbopump system.

As shown in table III, nearly all rocket engine turbines have had two axial rotors, the designs being two-stage pressure-compounded for low-energy propellants (fuels other than hydrogen), two-row velocity-compounded for high-energy propellants (hydrogen fuel) in GG and tapoff cycles, and two-stage reaction for expander and staged-combustion cycles. Exceptions to these rules are the A-7 and the F-1 turbines, which have two-row velocity compounded turbines for low-energy propellants because the turbine pitchline velocities are low. Another exception is the RL10, which has a two-stage pressure-compounded turbine in an expander cycle because the turbine pitchline velocity is too low for a reaction turbine.

Turbine efficiency is a function of the turbine type, the number of stages, and the ratio of the turbine pitchline velocity U to the isentropic spouting velocity C_o. These design-point trends are shown in figure 21. Note that these curves are for illustrative purposes only, because they are for subsonic relative Mach numbers (Mach number losses = 0) and do not include clearance losses. Since radial turbines are difficult to multistage and since rocket turbine U/C_o's are generally less than 0.4 (fig. 22), axial turbines are more efficient (fig. 21(a)) for rocket engine applications. Another problem with the radial turbine is that, at the same U/C_o, it is heavier. Therefore, rocket engines have used axial turbines exclusively.

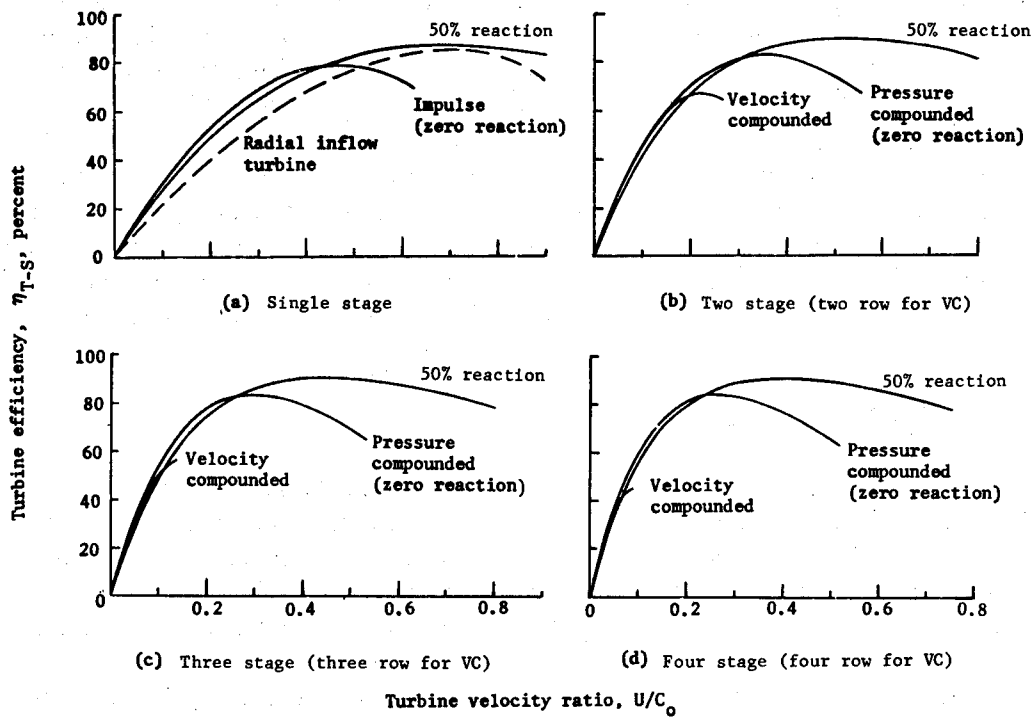

Figure 21. – Typical design point efficiencies for 1-, 2-, 3-, and 4-stage turbines (supersonic relative Mach number).

To maximize the energy available per pound of flow, the turbine inlet temperature and, for GG and tapoff cycles, pressure ratio generally are maximized. Since this procedure produces a high turbine isentropic spouting velocity C_o and since a high U/C_o is required to obtain a high efficiency (fig. 21), turbine pitchline velocities are generally maximized. However, because of centrifugal stress, these velocities are limited to a range of 1500 to 1800 ft/sec. Additional limitations result from the fact that, to obtain proper proportions for the turbopump, the pitch diameter is limited to approximately three times the pump impeller diameter and, to avoid excessive leakage losses, the lower limit on blade height is approximately 0.15 in.

Two-stage (two-row for velocity compounded) turbines generally are selected because they offer higher efficiency than single-stage turbines (cf. figs. 21(a) and 21(b)) without the

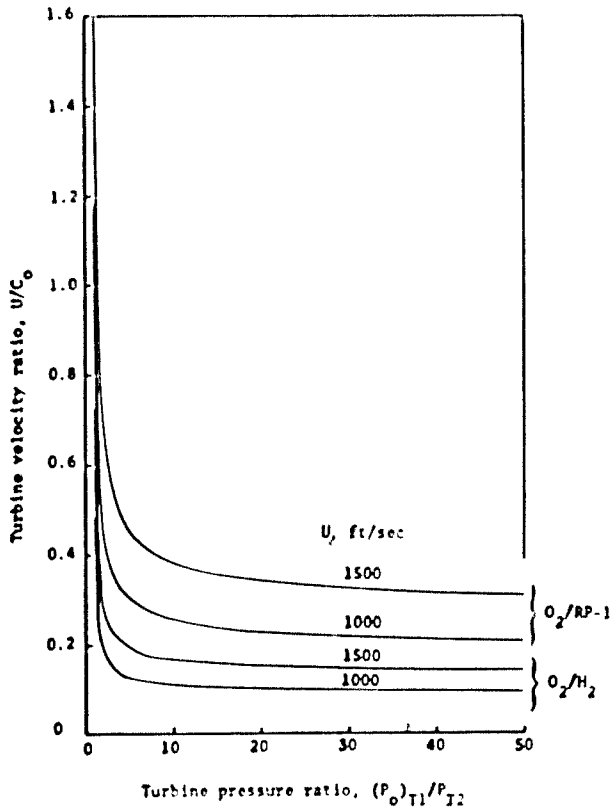

Figure 22. – Typical turbine velocity ratios as a function of pressure ratio (inlet temperature of 1500° F).

added complexity and weight of turbines with three or more stages (three rows for velocity compounded). As shown in figure 21(b), two-row velocity-compounded turbines are either as efficient or nearly as efficient as two-stage pressure-compounded turbines if the velocity ratio is less than 0.2. In addition, velocity-compounded turbines are shorter and higher because they have a turning vane, rather than a nozzle, between the rotors. The zero (or nearly zero) pressure drop across the turning vane also results in a lower axial thrust for the velocity-compounded design. Therefore, two-row velocity-compounded turbines generally are used for rocket engines with turbine velocity ratios less than 0.2. For velocity ratios between 0.2 and 0.34, two-stage pressure compounded (impulse staging) turbines generally are used; they are more efficient up to 0.3 (fig. 21(b)) and, even though slightly less efficient between 0.3 and 0.34, they have less axial thrust than reaction turbines because there is little or no pressure drop across the rotor. Above velocity ratios of 0.34, reaction

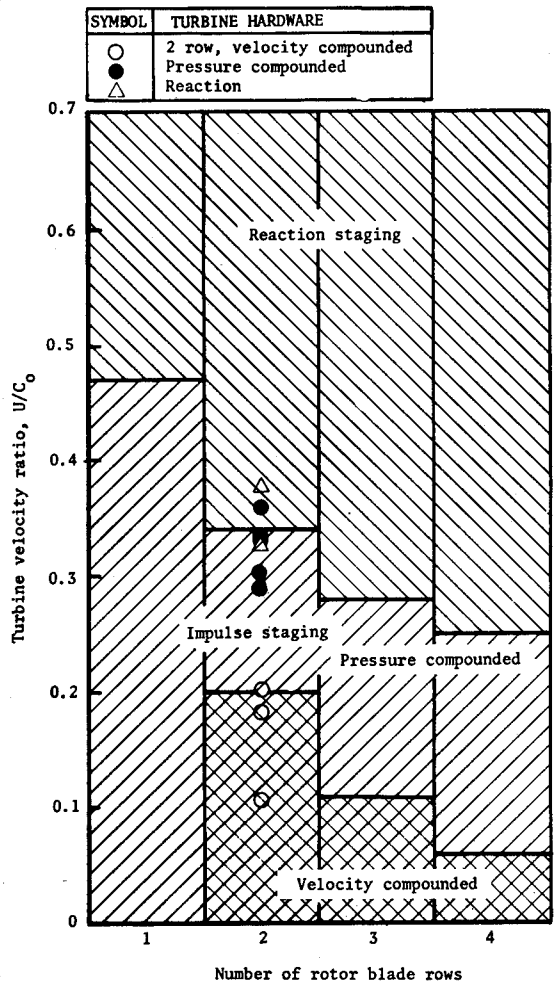

Figure 23. – Approximate regions of application for various kinds of rocket engine turbines.

turbines generally are used because, as shown, they are more efficient. Figure 23 shows that these ranges agree reasonably well with existing hardware. It should be noted that these ranges are not absolute. For example, for two stages, a 25-percent-reaction turbine is more efficient than either a pressure-compounded or a 50-percent-reaction turbine at a velocity ratio of 0.31; therefore, it would be selected if efficiency were very important and axial thrust relatively less important. On the other hand, a two-stage pressure-compounded

turbine could be selected at a velocity ratio of 0.36 if axial thrust were relatively more important than efficiency. This overlap is shown by the design data points on figure 23.

Turbine efficiency can be increased by using more than two stages. However, as shown in figure 21, the rate of increase decreases as stages are added. For example, at a U/C_o of 0.3, typical 1-, 2-, 3-, and 4-stage turbines (50-percent reaction) have efficiencies (for relative Mach numbers less than 1.0) of 68, 80, 85, and 88 percent, respectively. In addition, these multistage (more than two stages) turbines are more complex, are heavier, and require outboard bearings that, in turn, require an extra seal and special provisions for cooling and lubricating. Figure 23 also shows the approximate regions of application for these turbines.

An additional factor considered in turbine design is that, for a given rotational speed, a diameter tradeoff between weight and efficiency exists. In addition, a tradeoff among turbopump weight, turbine pressure ratio, and turbine inlet temperature exists if the speed is limited by turbine-blade centrifugal stress. These and other tradeoffs are discussed in more detail in sections 2.2.1.4 and 2.2.3.1.

For low-horsepower applications, partial admission or geared turbines often are used to obtain blades that are high enough to avoid excessive clearance losses. Some early RL10 turbines were partial admission and the YLR81-BA-11 turbopump uses both partial admission and gearing. Geared turbines also eliminate some of the controls that are necessary for dual-shaft arrangements. This reduction is desirable for small engines, because control component weights generally do not scale down to small size as well as turbopumps do.

For staged-combustion cycles, reductions in system pressure drops and interconnection complexity may be achieved by reversing the turbine so that the high-pressure stage is outside of the low-pressure stage. The hot gas from the precombustion can then enter through an annular axial inlet and, with the aid of an annular 180-degree elbow downstream of the low-pressure stage, the turbine discharge gas can flow back to the main combustion chamber through an annular axial discharge.

2.2 DETAIL DESIGN AND INTEGRATION

2.2.1 Limits to Rotational Speed

2.2.1.1 INDUCER CAVITATION

The inducer is the low-pressure pumping element located immediately upstream of the pump impeller on (usually) the main turbopump shaft. Its purpose is to permit the pump to

operate at a lower inlet NPSH (sec. 2.1.1.2) or, for a given pump inlet NPSH, to operate at higher speed. If the inducer is operated above its suction specific speed limit, excessive cavitation will occur and the pump will not deliver the design headrise. This limit to inducer suction specific speed generally is the first (lowest) limit to turbopump rotational speed encountered in design.

Suction specific speed S_s is a useful and significant design parameter that relates rotational speed, flowrate, and net positive suction head:

$$S_s = \frac{NQ^{1/2}}{(NPSH)^{3/4}} \tag{5}$$

where

S_s = suction specific speed, rpm-gpm$^{1/2}$/ft$^{3/4}$

NPSH = net positive suction head, ft

Corrected suction specific speed S'_s is the suction specific speed of a hypothetical inducer with zero inlet hub diameter that operates with the same inlet fluid axial velocity, inlet tip speed, rotational speed, and minimum required NPSH as the test inducer. The correction is made by numerically increasing the flowrate to compensate for the area blocked by the hub at the inlet:

$$S'_s = \frac{S_s}{(1 - \nu^2)^{1/2}} \tag{6}$$

where

$$\nu = \frac{\text{inlet hub diam.}}{\text{inlet tip diam.}} = \frac{D_{h1}}{D_{t1}}$$

Selection of inducer design is based on the suction performance and efficiency at the design point (figs. 24 and 25, resp.). The inducer design-point suction-performance correlations in figure 24 were obtained by drawing curves through the peaks of the test curves for 20 inducer designs that were tested in hydrogen, oxygen, and water; these basic test curves are shown in figure 26 (adapted from ref. 2). The efficiency correlation in figure 25 was obtained by drawing curves through the experimental best-efficiency points of 20 inducer designs, some of which were the same as those listed in figure 26.

The allowable suction specific speed of an inducer can be increased by designing the inducer at a lower inlet flow coefficient, as shown by the correlation of test data on high-speed pumps presented in figure 24. (Also shown is that the data peak at $\phi_{It1} \approx 0.05$.) However, this action reduces the inducer efficiency (fig. 25) and, particularly at high pump specific

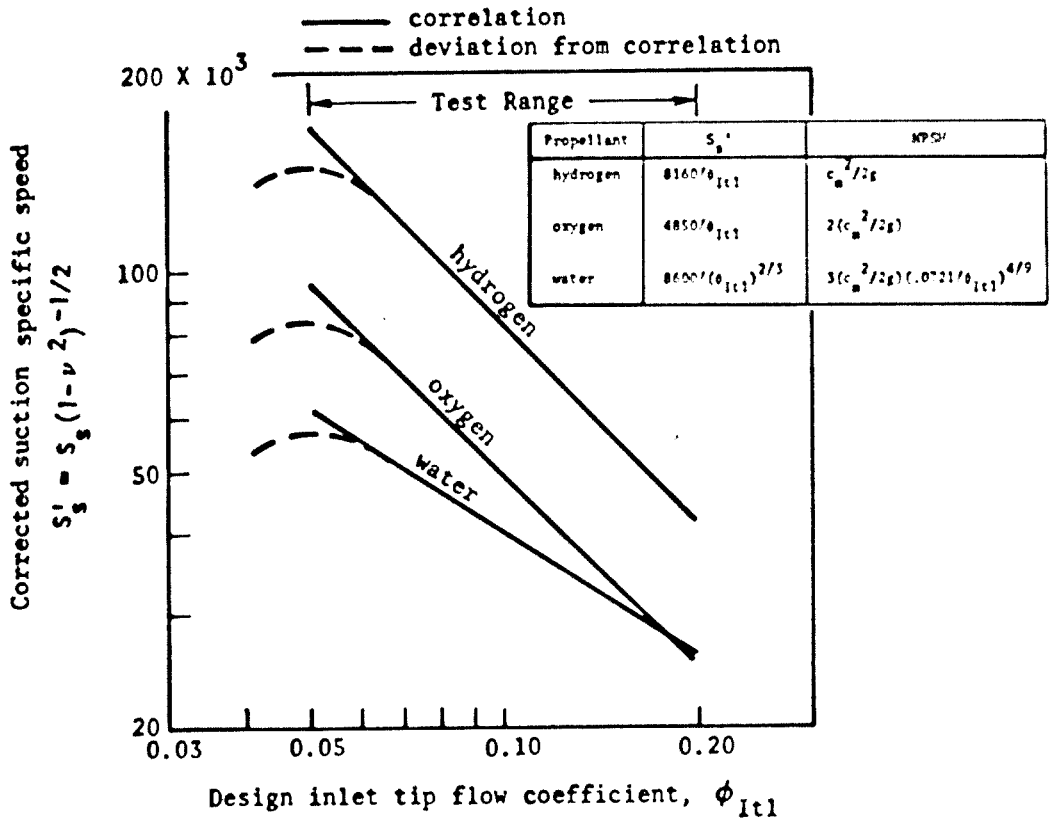

Figure 24. – Influence of inducer design inlet flow coefficient on cavitation performance.

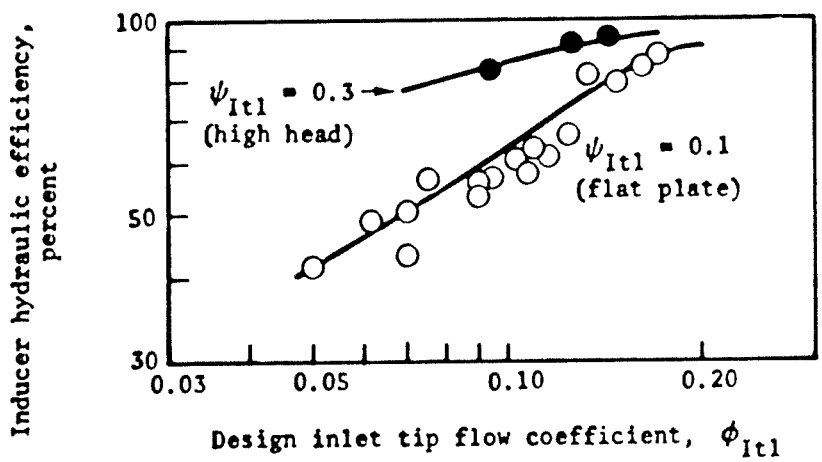

Figure 25. – Influence of inducer design inlet flow coefficient on inducer hydraulic efficiency.

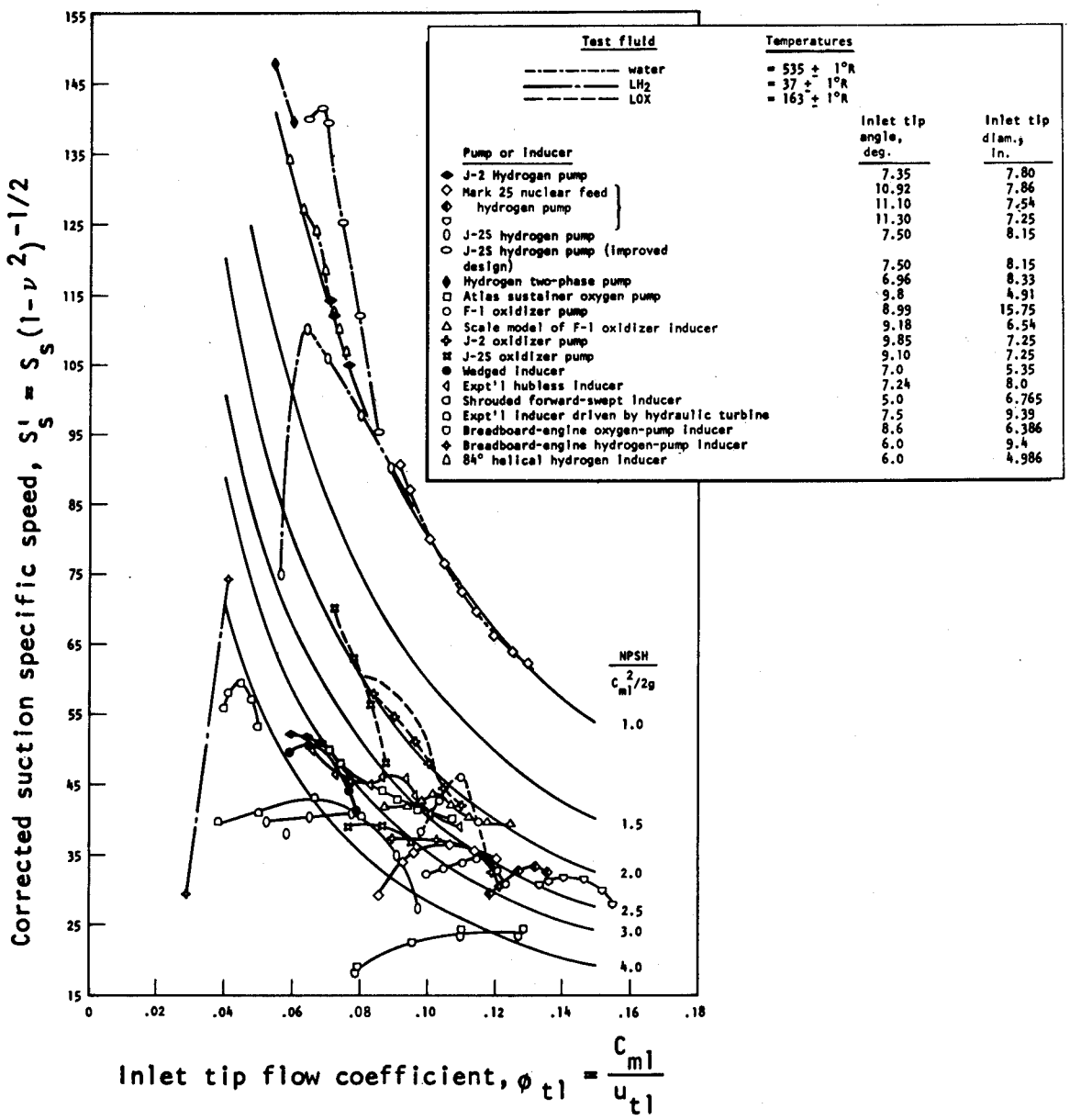

Figure 26. – Summary of empirical data on suction performance of various pumps and inducers (ref. 2).

speeds, the overall pump efficiency (fig. 15). The J-2 hydrogen pump illustrates this relation. The original pump inducer, which had an inlet diameter of 7.25 in. and an inlet flow coefficient of 0.095, did not meet the NPSH requirements. The inducer was then redesigned for an inlet diameter of 7.8 in., the result being a reduction of the inlet flow coefficient to 0.073 and an increase in the suction specific speed capability (fig. 24). This change decreased the NPSH requirement to an acceptable level, but also slightly decreased the pump efficiency. Therefore, for a given application and mission, the configuration is optimized in terms of turbopump weight, pump efficiency, and tank weight. For long life, suction specific speeds are often derated to reduce cavitation damage, and therefore life can become an important design factor.

During operation close to the limit of suction performance, vaporization within the inducer chills the surrounding liquid, thereby reducing the vapor pressure and increasing the local NPSH. This effect permits the pump to operate satisfactorily at a reduced value of inlet NPSH. The difference between the basic NPSH, which is independent of thermodynamic effects and is approximately equal to the NPSH in water at room temperature, and the above-mentioned reduced value of NPSH is called the thermodynamic suppression head (TSH). This parameter varies with propellant type and is the reason for the variation in suction performance shown in figure 24; at low inducer tip speeds, TSH would result in higher suction specific speeds than those shown. Theoretical relations from reference 22 were correlated with data on the J-2 oxidizer pump, J-2 fuel pump, Atlas-sustainer oxidizer pump and Thor oxidizer pump to produce the following empirical expressions for NPSH that include these thermodynamic effects (all parameters referred to inducer inlet):

$$\left(\frac{\mathrm{NPSH}}{c_m{}^2/2g}\right)_{\mathrm{hydrogen}} = \frac{0.931}{\phi_t{}^{4/9}} - \frac{114.7\,(D_t/Z)^{0.16}\ \beta_{\mathrm{hydrogen}}}{\phi_t{}^2\ u_t{}^{1.15}} \tag{7}$$

$$\left(\frac{\mathrm{NPSH}}{c_m{}^2/2g}\right)_{\mathrm{other}} = \frac{0.931}{\phi_t{}^{4/9}} - \frac{6.35\,(D_t/Z)^{0.16}\ \beta_{\mathrm{other}}}{\phi_t{}^2\ u_t{}^{1.15}} \tag{8}$$

where

c_m = fluid axial velocity at inducer inlet, ft/sec

g = acceleration due to gravity, ft/sec^2

ϕ_t = inducer inlet tip flow coefficient

D_t = inducer inlet tip diameter, in.

Z = number of inducer blades at inlet

β = thermodynamic suppression head factor (fig. 27)

u_t = inducer inlet tip speed, ft/sec

The first term on the right side in each of these equations is the ratio of the basic NPSH (room-temperature water) to the inlet fluid axial velocity head (kinetic energy of the entering fluid expressed in feet of head) and is derived from the water suction-performance correlation (fig. 24) and the suction specific speed equation (eq. (5)). The second term in each equation is the ratio of the thermodynamic suppression head to the inlet axial velocity head of the pumped fluid. The thermodynamic factor β is a function of propellant type and propellant vapor pressure and is shown for various propellants on figure 27. If the ratio of NPSH to inlet velocity head is greater than 1.0, the NPSH is equal to the product of the ratio and the inlet axial velocity head. If the ratio is less than 1.0 but the inlet equilibrium two-phase-flow Mach number is greater than 1.0, the inlet line is choked, and the NPSH must equal the inlet velocity head (refs. 23, 24, and 25). If the ratio is less than 1.0 and the inlet equilibrium two-phase-flow Mach number is less than 1.0, two-phase pumping is possible, the NPSH can be less than the inlet velocity head, and the two-phase-flow principles apply. (These principles are discussed at the end of this section.) When the ratio of NPSH to inlet velocity head is greater than 1, equations (7) and (8) show that the pump NPSH requirements may be adjusted by changing tip speed and vapor pressure as well as inlet flow coefficient. Because of the small exponent on the (D/Z) term, the effects of diameter and blade number are slight. Additional discussion of thermodynamic suppression head is contained in references 1 and 22.

The inducer speed limit due to cavitation can be essentially removed by placing a low-speed preinducer upstream of the main inducer to provide the required inlet pressure to the main inducer. A preinducer can be driven by several methods, four of which are illustrated schematically in figure 28. The gear drive (fig. 28(a)) is the most positive and efficient but, because of the gear train, may be the most complex and least reliable. The through-flow hydraulic turbine drive (fig. 28(b)) is both simple and efficient. The recirculated-flow hydraulic turbine drive (fig. 28(c)) can be installed in the engine at a location remote from the pump inlet, whereas the gear and the full-flow drives cannot; however, this drive is less efficient than the other two drive systems. The electric drive (fig. 28(d)) can also be installed at a location remote from the pump inlet. The electric motors often are propellant-cooled to save weight and reduce the number of rotating seals. This drive is attractive for low-thrust applications. Another configuration that can be installed at a remote location is the gas-turbine drive, the type used for the RL10 engine in the Centaur stage. The Centaur boost pumps (fuel and oxidizer) are located in the propellant tanks, and each is gear driven by its own hydrogen-peroxide gas turbine. The gas-turbine boost pump system is complex and usually requires either a separate gas generator or a catalyst bed, but has the advantage (as used on the Centaur) that it can be started before the main pumps.

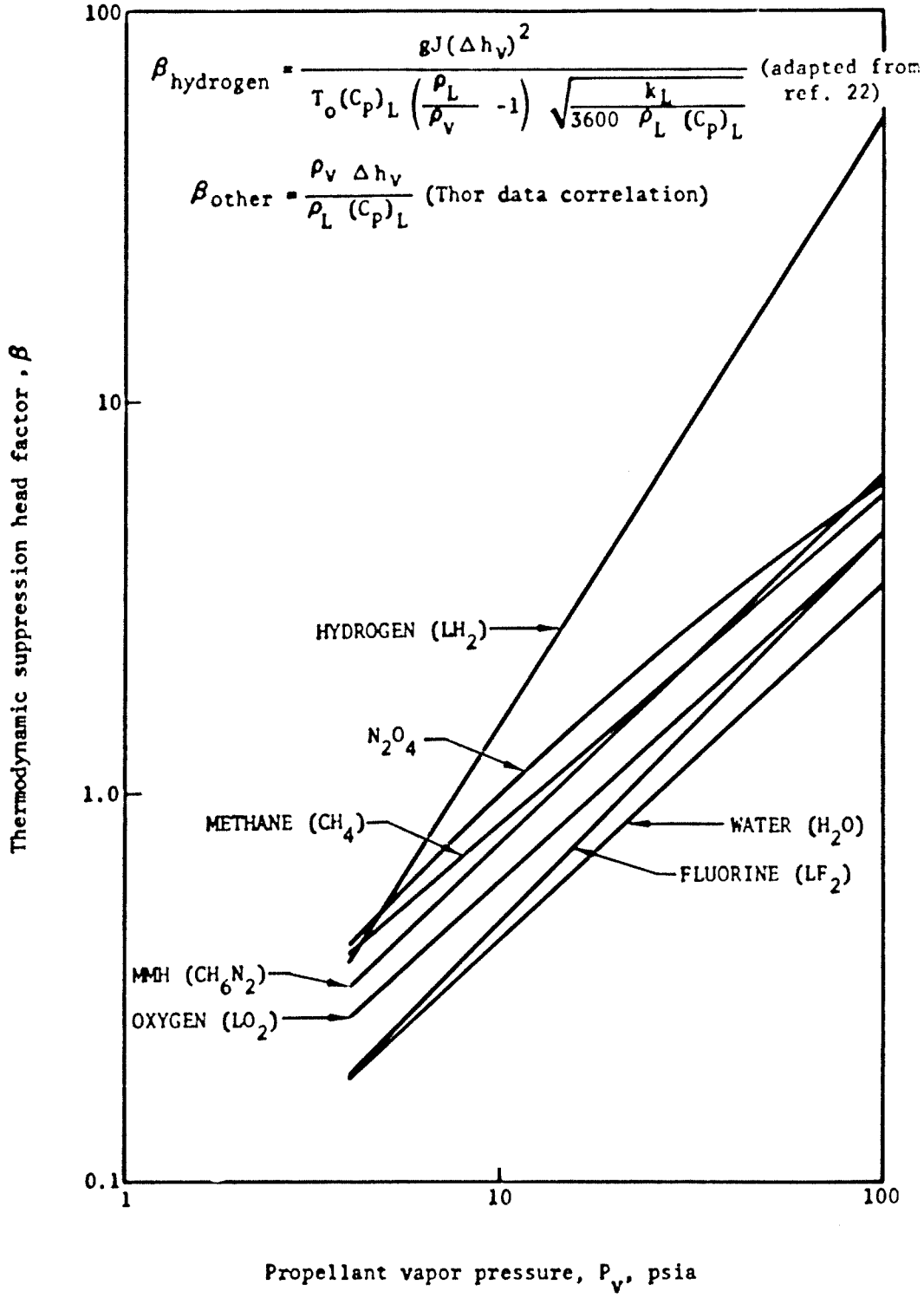

Figure 27. – Thermodynamic suppression head factor for various propellants as a function of vapor pressure.

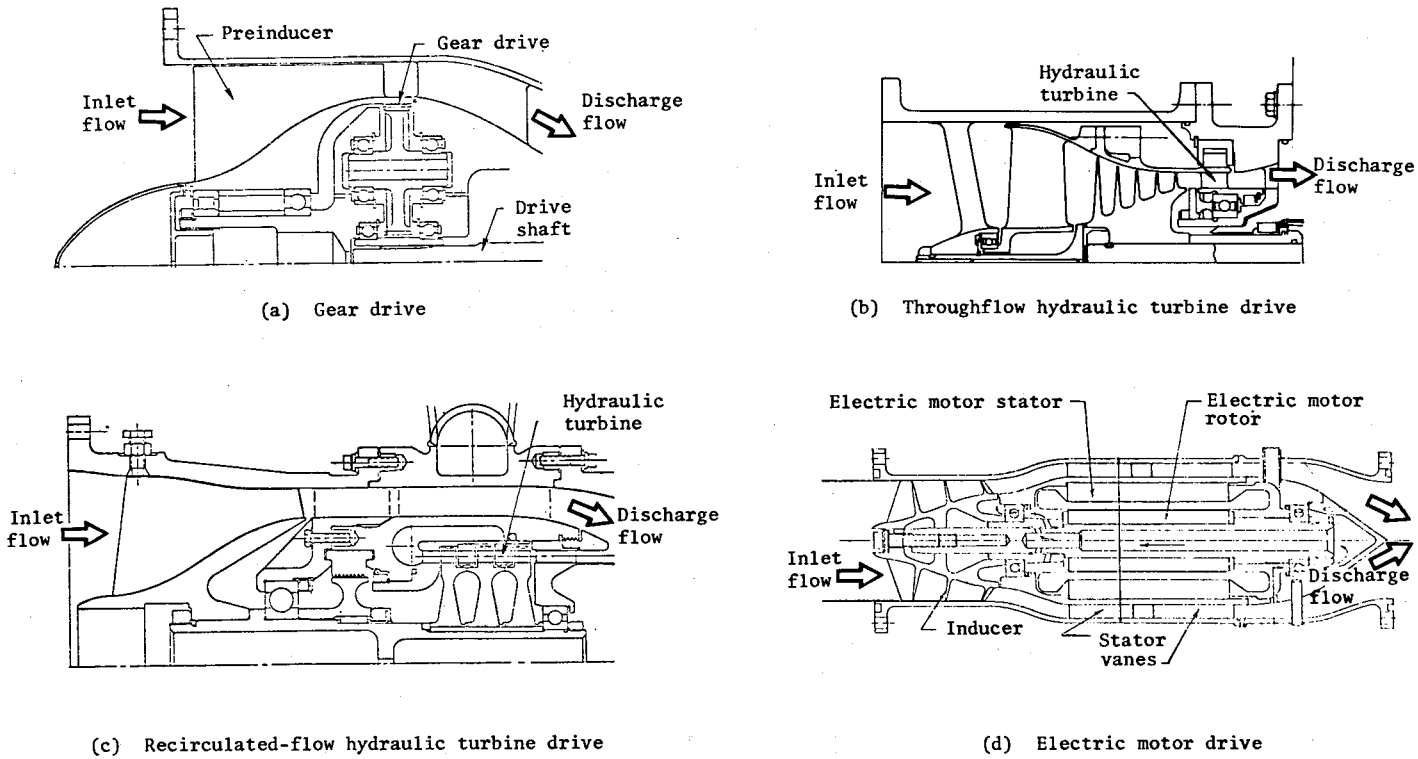

Figure 28. — Schematics of four methods for driving an inducer.

Recent developments (refs. 23, 24, and 25) have indicated that two-phase (vapor-liquid) propellants can be pumped and, therefore, that cryogenic propellants that are saturated in the tank (zero tank NPSH) can be pumped. Vapor-pumping capacity can be determined from figure 29 or from the expression

$$\alpha = 1 - \left[\frac{1 - (i/\beta)_L}{1 - B}\right] \tag{9}$$

where

α = vapor volume fraction at the pump inlet, vapor-volume/mixture-volume

$(i/\beta)_L$ = 1 − arc tan ϕ_L = ratio of incidence angle to blade angle at the inducer inlet (for a pure liquid)

ϕ_L = flow coefficient at inducer inlet (for a pure liquid)

B = blockage fraction (normal to flow direction) of the inducer blade plus blade boundary layer

The values for pumping capacity in combination with the thermodynamic relationships for expansions from a saturated liquid are used to size the pump inlets for zero NPSH. Except for the increased size, two-phase inducers are similar to other inducers. In oxygen, low-speed

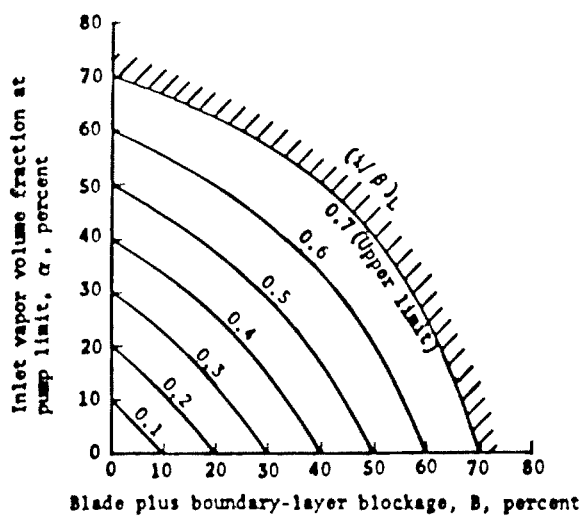

Figure 29. – Vapor pumping capability for two-phase inducers.

boost pumps generally are required in order to obtain the large inlet areas necessary to accommodate the extremely low acoustic velocity of two-phase oxygen in equilibrium (i.e., to avoid choking in the inlet line).

2.2.1.2 BEARING DN

The second turbopump speed limit reached is usually the DN limit of the rolling-contact bearing. This parameter, the product of bearing bore D (mm) and rotational speed N (rev/min), is proportional to the tangential velocity of the bearing at the inside diameter of the inner race. If the DN limit is exceeded, lubrication and cooling will be insufficient, and the bearing may fail because of overheating and contact wear and fatigue. Reference 6 contains the information on bearing capabilities, including the DN limits for typical rocket engine applications in which the life requirement and the radial and axial loads are low. Lower DN values are necessary if long life and high load-carrying capacity are required.

Since bearing DN is proportional to shaft diameter, it becomes a function of everything that affects shaft diameter, including bearing location. The most common bearing locations are shown in figure 30.

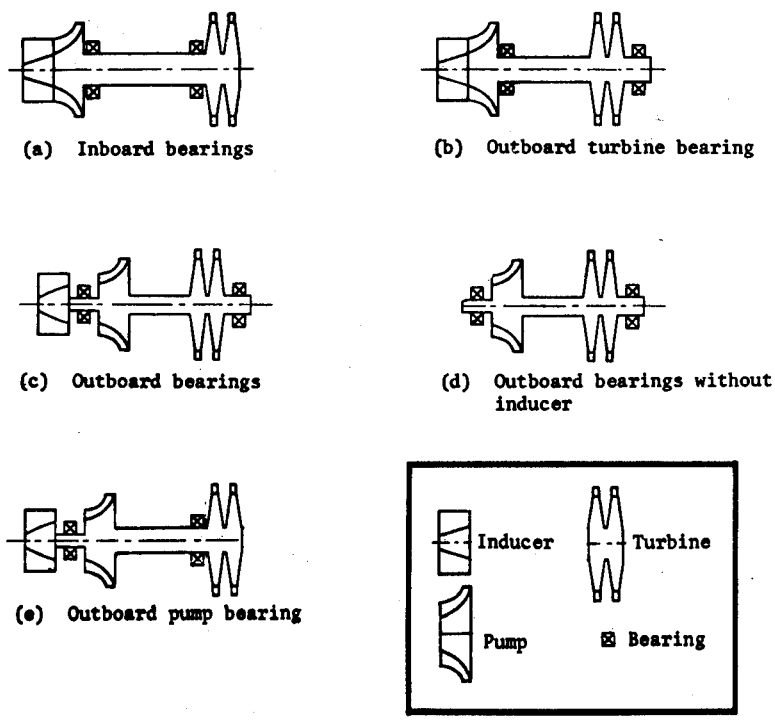

Figure 30. – Schematics of bearing support arrangements.

The overhung-turbine bearing arrangement (fig. 30(a)) has been used almost exclusively for rocket engine turbopumps in which the pump is mounted on the same shaft as the turbine; the turbopumps for the J-2, RL10, and F-1 engines (figs. 1, 2, 3, and 6) are examples of this arrangement. This configuration avoids the additional supporting structure and the separate lubrication and sealing systems required for the outboard turbine bearing (figs. 30(b), 30(c), and 30(d)). For the overhung arrangement, the shaft is often sized so that the turbopump design speed is below the lowest value of shaft critical speed, which in general is that due to simple shaft bending. This sizing is particularly important if the turbopump must operate over a wide speed range or, in other words, if the turbopump application requires throttling. The following equation is used to estimate this limiting speed:

$$N = \frac{(DN)^{4/3}}{K_{DN}\,(HP)^{1/3}} \tag{10}$$

where

DN = bearing bore X bearing speed, mm - rpm

HP = shaft horsepower, hp

K_{DN} = empirically derived coefficient for bearings, as follows

Number of pumps on shaft	Propellant	K_{DN}
1	LH_2	325
1	Dense	374
2	Dense	478

The final design speed based on a critical-speed analysis may not agree with the value from equation (10), because the equation is based on an empirical correlation of the shaft sizes for existing turbopumps and because critical speed is influenced by factors such as bearing spring rate, shape, size, and weight of the components. If this deviation causes difficulty, some of these factors, such as bearing spring rate, may be adjusted so as to avoid the critical-speed problem without having to redesign the whole turbopump. Some increase in the speed limit can be obtained by placing the pump bearing between the inducer and the pump impeller (fig. 30(e)) and using the inducer stator to support it. This arrangement reduces the overhang (relative to that shown in fig. 30(a)) and, for a given turbopump length, increases the bearing span. Both of these factors would permit a smaller shaft diameter and, therefore, would increase the speed limit.

Figure 8 shows that the bearing limit for this arrangement (labeled critical speed) differs from the other limits in that turbopump geometric similarity (constant specific speed) is not maintained when scaling with flowrate. The reason for this is that bearings and seals do not scale as the other turbopump components do. Consequently, turbopumps for low-thrust-level engines have proportionally longer shafts and more overhang than do turbopumps for high-thrust-level engines and therefore have a more severe critical-speed problem.

By placing the turbine bearing outboard (fig. 30(b)), the shaft diameter can be sized by torsional stress; since this practice generally produces a smaller shaft diameter, the turbopump therefore can be designed for a higher speed. The following equation expresses this speed as a function of the torsional stress that would occur in a solid shaft equal in diameter to the shaft diameter at the bearing (an equivalent-shaft stress of 25 000 psi has produced good correlation with final design):

$$N = 1.378 \times 10^{-5} \frac{S_{eq}^{1/2} (DN)^{3/2}}{(HP)^{1/2}} \tag{11}$$

where

S_{eq} = torsional stress in a solid shaft of the same outside diameter as the pump shaft at the bearing, psi

Even higher speeds may be obtained by moving the bearing on the pump end to a location between the inducer and the impeller (fig. 30(c)). This placement minimizes the required bearing diameter by minimizing the torque transmitted through the bearing bore. With a boost pump, a main pump inducer may not be needed, because the boost pump would provide sufficient NPSH for the main pump impeller. In this case, the pump bearing can be placed outboard (fig. 30(d)).

The arrangement options in figure 30 have thus far permitted sufficient latitude to use rolling-contact bearings for nearly all applications. If rolling-contact bearings eventually become restrictive, hydrostatic bearings (refs. 26 and 27), which function by having pressurized pads that act against the shaft to keep it centered, can be used. However, to minimize leakage losses, these bearings have very close clearances and therefore are expensive and are subject to the various problems associated with close clearances (e.g., contamination and differences in thermal growth among the shaft, the bearing, and the housing).

2.2.1.3 SEAL RUBBING SPEED

A turbopump speed limit that generally occurs at approximately the same rotational speed as the bearing DN limit is the seal rubbing speed. Seal rubbing speed is the speed at which

the rotating mating ring on the shaft rubs against the stationary seal nose piece. If the seal speed limit is exceeded, the nose piece will wear down too rapidly or the seal may fail due to overheating. The seal speed limits in common propellants may be found in reference 7.

The turbopump rotational speed at the seal speed limit depends on the shaft diameter. For a turbopump with an overhung turbine (fig. 30(a)) and a shaft sized on critical speed, the following equation is often used to estimate the limiting rotational speed:

$$N = \frac{K_{ss}(SS)^{4/3}}{(HP)^{1/3}} \tag{12}$$

where

SS = seal rubbing speed, ft/sec

K_{ss} = empirically derived coefficient for seals, as follows

Number of pumps on shaft	Propellant	K_{ss}
1	LH_2	240
1	Dense	208
2	Dense	164

As with equation (10), equation (12) is based on an empirical correlation of shaft diameters for various turbopump configurations that have overhung turbines and it does not scale along a constant specific speed line (fig. 8).

The seal speed limit, like the bearing DN limit, can be alleviated by utilizing a turbopump configuration with outboard turbine bearings (fig. 30(b)) instead of an overhung-turbine configuration. The limit then is expressed by

$$N = 4.37\,\frac{S_{eq}^{1/2}\,(SS)^{3/2}}{(HP)^{1/2}} \tag{13}$$

As before, S_{eq} is the (equivalent) torsional stress in a solid shaft of the same diameter and is usually 25 000 psi.

If the turbopump is to be designed at a rotational speed in excess of that allowed by the configuration in figure 30(b), special seals are required. The seal function can be broken into

two parts: static, and dynamic. The liftoff seal, which seals during static conditions and lifts off when pressurized during operation, can perform the static function. The dynamic or operating function can then be performed by a second seal that is in series with the first and that does not have as severe a speed limitation as the rubbing type of seal. This arrangement is being used in the SSME high-pressure hydrogen turbopump in which the operating function is performed by a stepped-labyrinth seal.

A type of seal that performs both functions is the hydrodynamic face seal, which is being developed for the SSME high-pressure oxygen turbopump. During static conditions, sealing is accomplished conventionally by having the spring-loaded nose press against the mating ring on the shaft. However, during operation, grooves in another part of the nose assembly trap pump fluid and force the nose away from the mating ring. As a result, the nose rides on a film of liquid during operation and therefore is not subject to the rubbing-seal speed limit.

More information on the various kinds of seals, including the hydrostatic seal, can be found in references 7, 26, and 28.

2.2.1.4 TURBINE-BLADE CENTRIFUGAL STRESS

Turbine-blade centrifugal stress refers to the stress at the turbine-blade roots caused by the centrifugal force on the blades during turbine operation. This stress is proportional to the square of the turbine rotational speed times the turbine annulus area ($N^2 A_a$). When this stress exceeds the stress limit of the turbine blade material, the turbine blades will pull off the turbine rotor. The $N^2 A_a$ limits for candidate materials as a function of temperature may be found in reference 4.

The previously mentioned methods for alleviating component speed limits are sufficient to allow the turbopumps for most propellants to operate at rotational speeds needed to maximize payload. However, for liquid-hydrogen turbopumps, the rotational speed for maximum payload generally exceeds the turbine-blade centrifugal-stress limit. Because there is no simple way of alleviating this limit, hydrogen turbopumps usually are designed close to the turbine stress limit; this practice generally results in a speed less than the maximum payload value. The J-2 hydrogen turbopump, which also operates close to the inducer cavitation limits, is an example of such a design.

To optimize the turbopump design at the centrifugal-stress limit, some rather involved tradeoffs among turbine inlet temperature, turbine pressure ratio, turbine type, turbine blade materials, turbopump blade materials, turbopump weight, and turbopump rotational speed are required. For example, raising the turbine inlet temperature will decrease the turbine required flowrate but will also decrease the allowable rotational speed by decreasing the allowable $N^2 A_a$. This speed decrease, in turn, will increase the turbopump size and weight. In addition, it will tend to decrease the efficiency of centrifugal pumps and to

increase the number of stages for axial pumps. The same type of optimization is necessary to determine the optimum turbine pressure ratio (fig. 31) because, as shown, the maximum speed and consequently the minimum turbopump weight both occur at a low pressure ratio, where the discharge annulus area A_a is minimum, whereas the minimum turbine flowrate occurs at a much higher pressure ratio and consequently at a larger discharge annulus area (assuming a constant inlet pressure).

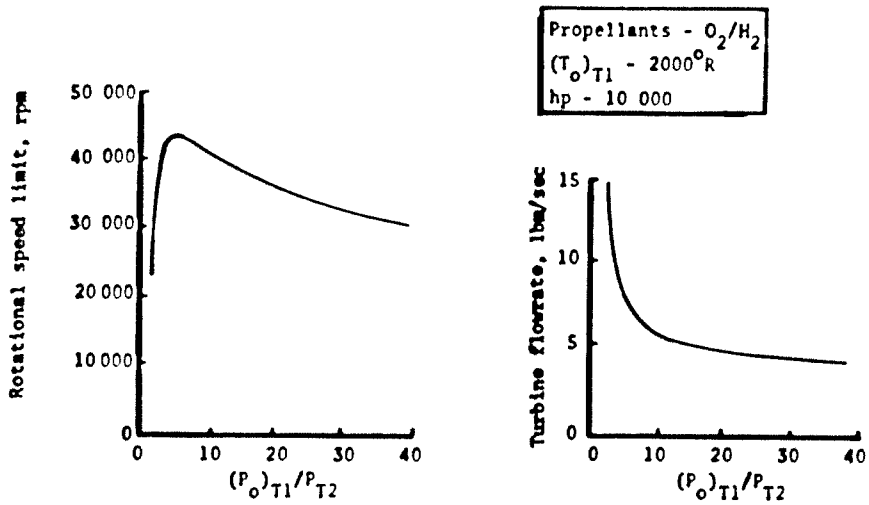

Figure 31. – Typical effects of turbine pressure ratio on design at the limit of turbine-blade centrifugal stress.

Cooling the turbine blades with the propellant being pumped makes it possible to operate at speeds above the stress limit for uncooled blades. A payload optimization is necessary to determine the optimum amount of cooling and to determine the proper tradeoff between cooling to allow an increase in turbine inlet temperature and cooling to raise the speed. Turbine cooling is common in jet-engine turbines and may be used in future rocket engine turbopumps. One problem with turbine cooling is thermal stress caused by hot gas on the outside of the blade and cold cryogenic propellant on the inside. For repeated rapid starts, stress resulting from the severe thermal gradient can cause cracking due to thermal fatigue and therefore can adversely affect life.

In some cases when multiple restart is required, cracking due to thermal fatigue can occur even if the blade is not cooled. The temperature gradient between the hot surface of the blade and the cold center of the blade may be sufficient to cause the problem. Hollow blades with hot gas ducted to the hollow center can alleviate this problem. An additional

benefit of hollow blades is that the blade thickness can be tapered to reduce the mass with radial distance from the base without affecting the outer contour of the blade. This technique can permit a higher limit on centrifugal stress without penalizing performance.

2.2.1.5 GEAR PITCHLINE VELOCITY

For geared turbopumps, the limit on gear pitchline velocity in combination with tooth stress limits results in an upper limit on rotational speed for the high-speed component of the turbopump. The gear pitchline velocity is the tangential velocity of the gear teeth at the pitch diameter. If the upper limit on this velocity is exceeded, a combination of high rubbing velocity, poor lubrication (high centrifugal forces decrease the amount of lubricant at the contact points), and heat can cause rapid wear or failure.

For a given horsepower transmitted at this pitchline-velocity limit, the rotational speed can be increased by decreasing the gear pitch diameter until the limit on tooth bending or compressive stress is reached. The rotational speed at that point is the upper limit on rotational speed for the high-speed component of the turbopump. Reference 5 contains the design information on limits to gear pitchline velocity and gear-tooth stress.

2.2.2 Pump Design

There are several pump design limits that cannot be exceeded without penalizing performance, decreasing stability, or risking failure. Among these limits are the minimum inducer inlet flow coefficient, the stability limits for axial and centrifugal pump stages, and the maximum pump impeller tip speeds.

2.2.2.1 INDUCER INLET FLOW COEFFICIENT

Inducers generally are mounted on the turbopump shaft upstream of the first-stage pump impeller. To meet the requirements of liquid rocket engines for low pump inlet pressure, inducers have helical blades with very gradual curvature and low values for the inlet flow coefficient Q_{it1} (ratio of fluid axial velocity to blade tangential velocity). Decreasing the design flow coefficient decreases inducer efficiency (fig. 25), which, in turn, decreases overall pump efficiency (fig. 19). However, a decreasing flow coefficient increases suction performance until flow coefficient value of 0.05 is reached (fig. 24); below that, the suction performance decreases. The extremely thin blades required to operate at a flow coefficient of 0.05 are difficult to manufacture and are often inadequate structurally. Consequently, inducer design inlet flow coefficients are seldom less than 0.07. For example, the J-2 oxidizer and fuel pumps have inducer inlet flow coefficients of 0.11 and 0.073, respectively.

2.2.2.2 STABILITY

If an axial-pump stage is operated at a flow coefficient much less than the design flow coefficient, the pump will stall, thereby causing the developed head to drop (fig. 12) and the performance to become poor and unpredictable. In addition, damage can occur. This stall problem existed with the original J-2 hydrogen pump, which had six stages. To solve the problem, it was necessary to add a seventh stage identical to the original stages. This addition allowed the pump to deliver the same flow at a lower rotational speed. The resulting higher operating flow coefficient unloaded the blades, thereby increasing the stall margin.

Stall may be predicted by using a blade loading parameter called the diffusion factor (ref. 29). In the J-2 engine program, it was found that axial-pump stall occurred when the blade diffusion factor at the mean flow-passage diameter exceeded 0.70. Therefore, axial pumps are designed such that during operation the maximum blade diffusion factor at the mean diameter is not larger than this value for either the rotors or the stators.

For centrifugal pumps, operation in the positive-slope region of the head/flow characteristic (figs. 12 and 13) has been known to cause instability during operation in the engine. Although the effect is not nearly as drastic as it is in axial pumps, that region of operation is avoided. Therefore, centrifugal pumps generally are designed such that the minimum flow coefficient during operation falls to the right of the zero-slope point on the head/flow curve.

2.2.2.3 TIP SPEED

For a given stage in a centrifugal pump, headrise is proportional to the stage head coefficient and the square of the impeller discharge tip speed:

$$H = \frac{\psi(u_{t2})^2}{g} \tag{14}$$

where

ψ = stage head coefficient

u_{t2} = stage impeller discharge tip speed, ft/sec

g = acceleration due to gravity, ft/sec^2

Because stage head coefficient for a centrifugal pump generally falls between 0.4 and 0.6, the primary component of stage headrise is tip speed, and consequently high-headrise stages require high tip speeds. However, if the tip speed is too high, the centrifugal forces will exceed the material strength of the impeller, and it will burst. Therefore, although high tip

speeds are often desired to minimize the number of stages, pump impellers are always designed with an adequate tip-speed margin between the maximum operating value and the burst value. For titanium, which has the highest tip-speed capability of the candidate impeller materials, the approximate tip-speed limits are 2800 ft/sec for unshrouded centrifugal pump impellers, 2000 ft/sec for shrouded centrifugal pump impellers, and 1500 ft/sec for inducers and axial pump rotors. (These values are difficult to generalize because the blade sweepback, the design specific speed, the blade height, and the method of power transmission – all affect the allowable tip speed.) Multistaging is sometimes required to stay within these limits.

It must be noted that hydrogen pumps generally are the only pumps that approach the tip-speed limits because hydrogen with its low density is the only propellant that has headrise requirements greater than the capability of a single centrifugal impeller. It must also be noted that multistaging is used to obtain a higher stage specific speed and therefore a higher efficiency (fig. 15). As a result, some multistage hydrogen pumps have tip speeds much less than the limits. For example, the J-2 and the RL10 (the only flight-proven hydrogen pumps) have tip speeds of approximately 900 and 800 ft/sec, respectively; the impellers were made out of "K" monel and aluminum, respectively.

2.2.3 Turbine Design

There are several turbine design limits that cannot be exceeded without penalizing performance, decreasing stability, or risking failure. Among these limits are the rotor disk and turbine blade centrifugal stress limits, which form the boundaries within which tradeoffs to obtain optimum performance are conducted, and the exhaust pressure requirements imposed by the engine configuration.

2.2.3.1 PERFORMANCE OPTIMIZATION

Tip speed is a function of rotor disk diameter and rotational speed. If tip speed is too high, the centrifugal stress on the rotor will exceed the material strength of the rotor, and it will fail. Therefore, turbines are optimized within the rotor disk stress limitations to obtain the best combination of turbine flowrate, turbopump weight, and start time. The optimizations treat the interrelated effects of tip speed, tip clearance, efficiency, flowrate, weight, rotating moment of inertia, start time, inlet temperature, and material strength. These interrelations may be illustrated by considering the effects of an increase in tip speed for a stress-limited candidate with constant rotational speed. In this case, an increase in the tip speed (1) increases the turbine diameter and therefore the weight; (2) increases the moment of inertia and therefore the turbopump start time; (3) increases the velocity ratio U/C_o and therefore the diagram efficiency (ref. 4); (4) decreases the blade height, which, for a given tip

clearance, increases the tip leakage losses; (5) increases the material stress level, which makes it necessary to reduce the inlet temperature to obtain a higher allowable stress; and (6) causes a net change in turbine flowrate as a result of the changes in diagram efficiency, tip leakage losses, and inlet temperature. Turbopump equivalent weight (sec. 2.1.2.2) is often used in such an optimization to convert the turbine flowrate to equivalent vehicle weight.

The turbine blade centrifugal-stress limit, discussed in section 2.2.1.4, generally applies only to hydrogen turbopumps and involves an even more complex interrelation because it affects rotational speed and therefore also affects the pump design. As with the tip-speed analysis, optimizations involving turbopump equivalent weight are used to determine the optimum combination of factors.

Another tradeoff is that of weight and efficiency to determine the optimum number of stages. Multiple stages increase the efficiency (fig. 21), but also increase the weight and require an outboard turbine bearing with its added supporting structure, seals, and lubrication system. Again, turbopump equivalent weight is used in determining the optimum number of stages. All existing flight turbopumps (table I) have used no more than two stages because the relatively short flight times have made weight relatively more important than turbine efficiency.

2.2.3.2 EXHAUST PRESSURE

The turbine exhaust pressure is the static pressure of the turbine gas as it leaves the last turbine blade row. For GG cycles, this pressure is low so that a high turbine pressure ratio and therefore a low turbine flowrate are achieved. However, the exhaust pressure must be high enough to permit an efficient and stable exhaust. For example, the flareback of turbine exhaust gases into the boattail of early ballistic missiles occurred because of the subsonic discharge of the turbine gas. A higher turbine discharge pressure could have avoided this problem.

On engines with conical or bell nozzles that employ a GG or tapoff cycle, the method of turbine gas disposal can affect the available turbine pressure ratio and the design of the turbine. If the turbine exhaust is discharged into a separate nozzle, it may be desirable to have this nozzle "choked" (operated above the critical pressure ratio), so that turbine discharge pressure will not be affected by changes in atmospheric pressure during vehicle flight. This practice will increase the turbine discharge pressure and affect the turbine pressure ratio. If the turbine exhaust is discharged into the main nozzle, as on the J-2 engine, the point at which the turbine exhaust is put into the nozzle will determine the turbine back pressure. When the turbine exhaust is used to cool the expansion nozzle by "dump cooling" (flowing the turbine exhaust down the coolant passages and discharging the gas at the exit, expansion at the exit being used to increase performance), the pressure loss in this circuit must be considered in establishing the turbine discharge pressure.

For staged-combustion and expander cycles (sec. 2.1.1.4), the turbine discharge pressure must be sufficient to permit the flow to pass through the downstream ducting and the injector into the thrust chamber; therefore, the turbine discharge pressure exceeds the engine chamber pressure instead of being a small fraction of the chamber pressure, as in the GG cycle. As a result, the turbine pressure ratios for expander and staged-combustion cycles are minimized to minimize the pump discharge pressure requirements; however, for GG cycles, which show little effect of turbine pressure ratio on pump discharge pressure, the pressure ratios are maximized within the previously discussed limits. The RL10 engine is an example of the expander cycle arrangement. No operational engines employ the staged-combustion cycle, but this cycle is used in the SSME now under development.

2.2.4 Turbopump Mechanical Integration

In turbopump mechanical integration, the detailed construction, arrangement, and attachment of the various turbopump components are planned to best meet the turbopump design objectives. In the following section, the major options in solving the basic design problems are discussed, and the options that in general provide the best solutions are pointed out. However, because there are many possible requirements and many interdependent components, solutions other than the best general one often must be considered and used.

2.2.4.1 BEARING PLACEMENT

From the design standpoint, the turbopump arrangement and the placement of bearings (fig. 30) are primarily a function of the sizes of the pump and turbine components. For the single-shaft turbopump design, the pump impellers and the turbine disks are mounted on a shaft that usually is supported by two bearing sets, one located forward within the pump and one aft toward the turbine. If the rotational speeds are low enough that the bearing DN is within limits and if the turbine has, in general, no more than two rotors, the turbine usually is overhung by placing the aft bearing inboard (fig. 30(a)). At the present time, the overhung arrangement has been used almost exclusively for nongeared turbines in order to simplify bearing lubrication and minimize the structural requirements of the turbopump housing. However, if the turbine has more than two rotors, the shaft required to support an overhung turbine generally is too large to permit the bearing to stay within DN limits. For this case and also for very-high-speed designs, the aft bearing usually is placed outboard. This arrangement is more complex because an outboard aft bearing requires an additional seal between it and the turbine, provisions for lubrication, and structural support by the turbopump housing. In selecting the bearing arrangement, the complexity required to operate at a higher speed often must be weighed against the potential benefits of increased pump efficiency or decreased weight. In short, the added complexity must be justified.

On the forward end, the bearing for a single-stage pump usually is placed inboard of the pump impeller, as in the J-2 oxidizer turbopump (fig. 1). If the pump has two or more stages, the forward bearing generally is placed between the first and the second stages as in the RL10 fuel pump (fig. 3); this location makes possible a reduction in the shaft diameter and consequently the bearing DN by reducing the amount of torque transmitted through the bearing. If the pump has a separate inducer stage, the bearing often is placed between the inducer and the remainder of the pump, with the inducer stators acting as a bearing support, as in the J-2 fuel (fig. 2) and the Mark-29 fuel pumps (fig. 32).

For cases in which both the turbine and the pump have more than three impellers, the pump and the turbine can be designed as separate units, each with its own sets of bearings and seals. Under these circumstances, the pump and the turbine are developed as separate units and later attached to one another by a coupling.

The turbopump configuration may incorporate a reduction gear between the turbine and the pump, thereby permitting each to be designed at its optimum rotational speed. In general, geared turbopumps are restricted to small sizes in which the turbine speed must be high enough to obtain reasonable blade heights and in which multiple turbines would require excessive control elements in terms of size and weight. The latter consideration is important because controls do not scale down in size as rapidly as turbopumps.

2.2.4.2 TURBINE ROTOR ASSEMBLY AND ATTACHMENT

In general, the considerations involved in the relation of the turbine rotor to the whole turbopump depend on whether the turbopump configuration is single shaft, geared, or a separate unit. For a single-shaft configuration, the main consideration is the attachment of the turbine rotor to the main drive shaft, in which case the drive coupling receives considerable attention. This drive coupling (ref. 8) may consist of a curvic coupling in combination with an involute spline as in the Mark-29 fuel turbopump (fig. 32); a curvic coupling alone as in the F-1 (fig. 6), J-2 oxidizer (fig. 1), and early J-2 fuel turbopumps; an involute spline alone, or just a bolt and torque-pin joint as in the later J-2 fuel turbopumps (fig. 2). Here, the main considerations are normality and concentricity limits in order to ensure proper operation of the turbine rotor relative to the pump rotor.

If the turbine is geared to the pump, the turbine rotor is considered to be a separate unit. In this case, power may be transmitted by a gear attached directly to the turbine shaft as in the MA-5 sustainer turbopump or through a quill shaft into a power gear mounted on separate bearings as in the turbopumps for H-1, MB-3, and MA-5 booster (fig. 4). The use of a quill shaft allows some misalignment between the gear and the turbine drive shaft. If the power gear is mounted directly on the turbine shaft, torque deflections may be introduced by gear separation into the turbine drive shaft.

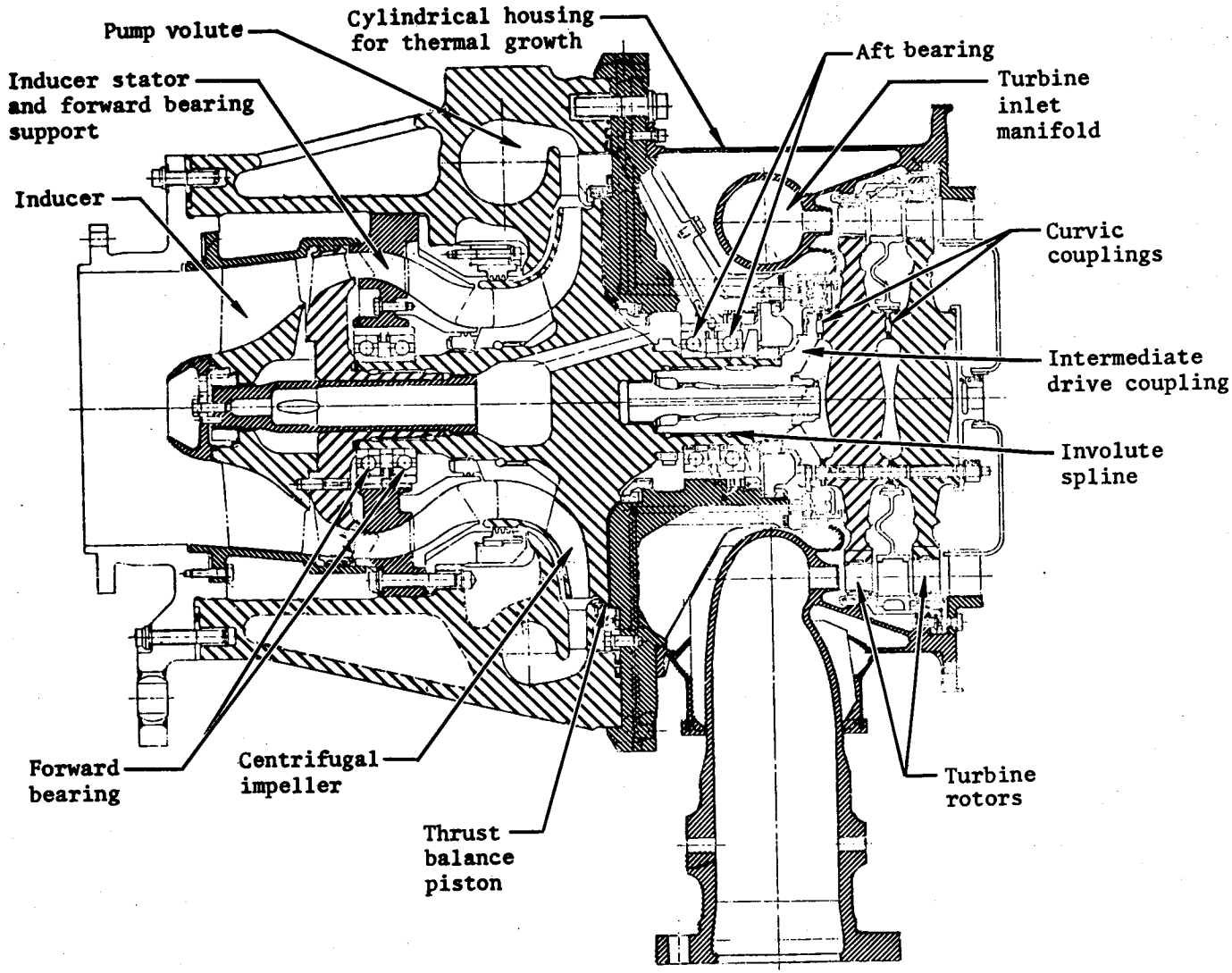

Figure 32. – Mark 29 experimental LH_2 pump.

If the turbine is a separate unit and is mounted in line with the pumps operating at the same speed, the drive coupling is of major importance. Such a coupling must be capable of transmitting the torque from the turbine to the pump. It must also be adaptable to deflection in regard to alignment and to duration in axial distance that may result from axial thrust in the turbine and the pump.

Turbine rotor tip speed strongly influences turbine rotor assembly and attachment. If the tip speeds are low, the turbine rotor disks can have holes through their centers, as in the Redstone A-7, Centaur RL10 (fig. 3), and MA-5 booster (fig. 4) turbopumps, and therefore the turbopump shaft can pass through them. However, if the tip speeds are high, the rotor disks may have to be solid at the center in order to withstand the high centrifugal forces, as in the J-2 (figs. 1 and 2) and F-1 (fig. 6) turbopumps. Under these circumstances, bolts partway out on the disks are required for attachment to the turbopump.

Extreme thermal conditions may exist within a turbopump assembly if the pumps operate with a cryogenic fluid and the turbine with an extremely hot gas. The temperature difference between the turbine and the pump may be as high as 2000° F. If the turbine rotors are mounted on the same drive shaft as the pump impeller, the total temperature range occurs in the rotor assembly. These severe temperature gradients in combination with the centrifugal stresses introduced by the high tip speeds of the turbine and pump rotors demand utmost attention and care during the design of the rotor assembly.

Thermal growth is an important factor that must be considered in maintaining concentricity in the rotor assembly. Pilots designed to maintain concentricity among the various rotor components may not be dependable if different materials are used for those various components or if thermal growth and centrifugal force act together on the pilots. A pilot designed to maintain concentricity may not operate properly if thermal considerations are neglected. The material of the mounting (or clamp) bolts, which fasten the turbine disks to the main drive shaft, is carefully selected so that the difference in thermal expansion will not result in loss of the clamping torque. Such loss of torque occurred during the development of the J-2 hydrogen pump. The original bolts were not strong enough to be adequately tightened. As a result, the first-row turbine disks cracked, and the curvic coupling teeth cracked and fretted. Stronger, tighter bolts in combination with improvements in curvic design and disk material processing eliminated the problem. Differential growth between turbine disks is also considered even though similar materials are used, because thermal distribution within the turbine may cause one disk to operate considerably hotter than the other. In this event, the clamping bolts are designed to adapt themselves to this differential radial growth between the turbine disks. Since the temperature on the upstream side of a turbine disk may be higher than that on the downstream side, deflection of the disk is also a consideration.

If, due to high tip speed, the rotor disks do not have a hole in the center, it is desirable to have a uniform disk profile, which means that both sides are symmetrical in coutour. For

these cases, the disks are attached to the shaft by an intermediate drive coupling, as in the Mark 29 experimental hydrogen turbopump (fig. 32). Since the torque that is to be transmitted from the turbine to the pump usually is large, the diameter of the intermediate coupling at which the turbine disks are attached usually is large. A large diameter also contributes to disk stability and reduces the unit loading. Such an intermediate drive coupling is attached to the main drive shaft with an involute spline and concentric pilots.

Curvic couplings (ref. 8) frequently are used to attach the turbine disks to each other (fig. 32). This type of coupling provides maximum torque-carrying capability and concentric and normality relationships among the individual components. The curvic coupling is used in connection with clamping bolts, usually through-bolts used in combination with clamping nuts. These clamping bolts are generally positioned at the mean diameter of the curvic coupling in order to avoid deflection of the turbine disk due to clamping forces.

If torque-carrying requirements are relatively small, a key or pin drive often is used. Frequently, the clamping bolts are modified in such a way that they are able to carry the torque as well as clamp the disk to the main drive shaft, as in the later J-2 fuel turbopump (fig. 2). Sometimes additional radial pilots are used to maintain concentricity between the main drive shaft and the turbine disk. However, this function can also be performed by drive pins; if so, at least three pins are used. Another method for maintaining concentricity is to cut the involute spline and radial pilots directly on the extended hub of the turbine disk and attach the disk directly to the main drive shaft. Clamping bolts are used to attach the turbine disk to the main shaft at a suitable bolt-circle diameter. If the radial stresses of the turbine disk are moderate, a hole in the center of the turbine disk is often used. In this case, the disks are mounted on a shaft that passes through their centers and are either attached to each other with clamping bolts or shouldered against the main shaft and clamped with a center clamping nut. Torque pins often are used for power transmission in such an assembly.

Two distinctly different turbine rotor designs have been employed: one in which the rotor disks are individual, as in the J-2 (figs. 1 and 2), MA-5 booster (fig. 4), YLR87-AJ-7 (fig. 5), and F-1 (fig. 6) turbopumps; and the other in which they are made from one piece or welded together into one unit, as in the RL10 (fig. 3) and A-7 turbopumps. If the rotor consists of individual disks, the mounting of the disks to the drive shaft is a step-by-step procedure. Such a configuration is designed so that the disks cannot be mounted onto the drive shaft backwards. Backward mounting is prevented by asymmetrical positioning of the bolt holes or by the addition of a so-called "idiot pin" (a locating pin that matches two parts in correct orientation). Since turbine disks are usually heavy and very difficult to handle because of their delicate nature, they are usually installed vertically. This procedure ensure safer handling and better control for positioning the disk center relative to the shaft center. In an installation where the disks are mounted directly to the drive shaft of the pump and the bearing is inboard, the shaft is already mounted in the bearings and is therefore positioned. However, if an outboard bearing is used, additional stackup tolerances, concentricity tolerances, runouts, and thermal deflections have to be considered. The

possibility of backwards or counter-rotating installation of the turbine rotor in relation to the main drive shaft usually does not exist if the rotor is made from one unit. If the pump has a thrust balance piston that allows axial travel of the shaft, the turbine rotor is positioned axially relative to the main drive shaft because, if neglected, the spacing between the rotor and the stator may be reduced. This reduction would introduce the danger of interference and consequent loss of power in the turbine.

2.2.4.3 TURBOPUMP HOUSING

For a single-shaft turbopump, joining the pump housing, which is superchilled for cryogenics, to the superheated turbine casing constitutes a major design problem. The interface between those two elements must be designed to adapt readily to the temperature differential. The differential shrinkage and growth are more pronounced in large turbopumps. Structural and mechanical methods are available for ensuring unrestrained thermal growth of the turbine casing. The structural method presently is favored, although most existing large turbopumps have used the mechanical method.

In the structural method, a relatively long cylinder is used for the turbopump housing. This configuration results in a cone smaller in diameter on the chilled side and larger in diameter on the heated side. Theoretically, the temperature should be equal to ambient somewhere along this cone and, therefore, the diameter at that location should remain constant. It is at this point that the cylindrical housing is flanged and bolted onto the pump casing. The ambient-temperature interface is the key to solving the problem of differential thermal growth. This structural method was used for the Mark 29 fuel (fig. 32) and the uprated F-1 (1.8 million lbf thrust) turbopumps.

The mechanical method for accommodating differential thermal growth is an arrangement of radial pins or keys on which the hot turbine casing can slide unrestrained without losing its concentric relation to the pump; this method was used in the J-2 and standard F-1 turbopumps (figs. 1, 2, and 6). A drawback to this system, however, is that the full reactive torque of the turbine has to be accommodated by the radial pins or keys; this accommodation may introduce strains and deformation in the mounting brackets in which the radial pins are anchored. Many mechanical problems have arisen when the mounting brackets containing the pins were attached directly to the hot-gas manifold or torus.

When a structural cylinder is used, the turbine manifold is attached to it; since the manifold containing the high-pressure hot gas is hotter than the surrounding shell, the manifold is mounted such that it may freely expand relative to the cylinder. In this mounting, a structural cone is attached to the manifold on one end and, on its larger-diameter end, to the turbine discharge side of the structural outside cylinder. In addition to suspending the manifold within the turbine casing, this structural cone may also be used to support the interstage stators.

The structural cylinder has been used also to alleviate thermal-distortion problems. For example, the rear bearing support on liquid-hydrogen pumps is generally subjected to liquid-hydrogen temperatures near the bearing and to high temperatures near the turbine mount. On one of the early versions of the J-2 hydrogen pump, gradual distortion of the bearing support occurred. The distortion was due to large, repeated thermal stresses during each firing that resulted from the radial temperature gradient through the bearing support. The solution was to change to a stronger material. However, as previously discussed, the solution for a similar design problem on a later pump, the Mark-29 hydrogen, is a more fundamental one. Here, the bearing support and turbine mount function are separated into two assemblies. The turbine mount is arranged in the form of a thin cylindrical part. The temperature gradient is then essentially axial, and thermal stresses are very low since growth is unrestrained.

If the turbine is a separate unit with bearings on both sides of the rotor, the turbine rotor is fixed relative to the turbine casing by the shaft bearing mounts, while the manifold with the gas discharge nozzle is flexible relative to the turbine casing. The problem is not so much misalignment between the manifold and the rotor, but the relative positions of the two bearing supports, which are more or less independent members because they are positioned in housings that are connected to each other by the casing. Hot gas should not contact either the casing or the bearing support structure because, if it does, the resulting thermal deflections will produce bearing misalignment. The passage of the hot-gas discharge through the bearing support often is avoided by using a discharge manifold that exhausts through a hole in the casing. If the hot-gas discharge passes through the bearing support, the bearing support struts are shielded by having them pass through vanes that contact the hot gas. The space between the vanes and the struts may be filled with insulation. Insulation is also used between the hot-gas manifold and the casing.

For large multistage turbines in which some thermal deflection is unavoidable, a linkage arrangement frequently connects the casing to the bearing carrier at the turbine discharge. This linkage keeps the bearing centered relative to the casing, regardless of the amount of thermal growth in the casing.

Material cross sections are held to a minimum wherever high temperature is expected. Flanges with bolt holes or threaded holes are avoided in hot-gas regions, because those flanges are usually of heavy cross section and are subject to thermal deflection and cracking. The reason for this is that the core of the heavy section will not heat as rapidly as the surface material and therefore high thermal stresses will be introduced. In addition, hot-gas flanges have to be sealed, a requirement that is often difficult to satisfy because of differential growth and distortion of the seals and the flanges.

2.2.4.4 BEARINGS AND SEALS

If the turbine and pump are in a single-shaft unit and the turbine bearing is inboard, seal and bearing considerations for the turbine are similar to those for the pump. For the arrangement shown in figure 30(a) with propellant-cooled bearings, a portion of the pump propellant is tapped off at a high-pressure region such as the pump discharge. This propellant passes through both bearings into a low-pressure region that is obtained by venting to either the pump inlet or a low-pressure region in the impeller flow passage. This cooling method is used for both J-2 turbopumps (figs. 1 and 2). A seal between the turbine bearing and the turbine minimizes leakage from the pump to the turbine. The pressure on the pump side exceeds the pressure on the turbine side so that turbine gas cannot leak into the pump and affect the bearing cooling. For an oxidizer turbopump, such as the J-2 oxygen pump (fig. 1), purge seals generally are used to prevent any oxidizer leakage into the fuel-rich turbine gas. If the support for the pump bearing is the inducer stator, as on the J-2 hydrogen pump (fig. 2), the static pressure rise across the stator can be used to recirculate propellant back through the bearing.

If an outboard turbine bearing (fig. 30(b)) is used, lubrication may be a problem. If the pumping fluid is hypergolic, then a separate lubricant flow has to be supplied by another source. A separate turbine unit does not have an internal source for bearing lubrication. Therefore, lubricant and cooling flow have to be introduced into the bearing cavities and removed. Bearing races on the turbine shaft or on the main drive shaft usually are installed with a slight interference fit in order to prevent looseness and possible sliding of the bearing race on the bearing journal of the drive shaft. Such sliding generates heat and contributes to an early failure of the bearing. If axial and radial loads are severe, a split-race bearing often is selected; in this design, additional balls can be inserted into the bearing, thereby making it capable of absorbing higher loads. Selecting the proper material for sealing the lubricant flow from the hot gas in the turbine is critical, because a sealing material that is compatible with one lubricant may not be compatible with another. The cavity pressure of the lubricant flow and the cavity pressure in the turbine are carefully established so that the seal will operate effectively; this step is particularly important when a dynamic seal, which operates on pressure balance, is used.

The bearing DN limit depends on operating conditions such as temperature, lubricant, and axial and radial loads. If the turbine is part of a single-shaft configuration, the turbine bearing may be a roller bearing. If the turbine is a separate assembly, the bearings are most likely to be ball bearings because they have to absorb axial loads as well as radial loads. Roller bearings have approximately three times the radial-load capacity of ball bearings but have no axial-load capacity and are often subject to end wear and skewing (ref. 6).

To prevent hot turbine gas from entering the bearing cavity, a seal is installed between the bearing and the hot-gas chambers. This seal arrangement usually consists of two seals, one a shaft-riding seal and the other a face-contact type of seal. The shaft-riding seal is an assembly of carbon rings made in segments around the periphery and bound together by

small coil springs. It acts like a labyrinth seal in that it causes a pressure drop in the turbine gas. That portion of the gas that may leak through the seal is collected in the cavity between the two seals and drained. The second seal, which is located close to the bearing, is a dynamic seal that necessitates a mating ring. This seal is activated statically by built-in springs that press the seal ring against the mating ring. During operation, a carefully calculated pressure balance ensures constant contact of the seal-ring face with the mating ring. Since the seal ring is always in contact with the mating ring, the peripheral velocity is limited. This rubbing-velocity limit is a function of the pressure drop across the seal and the properties of the bearing lubricant.

In some turbine configurations, the bearing and seal housings are also part of the turbine casing. In others, particularly in large configurations, a flexible diaphragm is attached to the turbine manifold and bolted to the bearing housing. In that case, the bearing housing is a separate component. If shaft whirl or critical speed becomes a problem, it can be alleviated by changing the bearing preload so as to change the bearing spring rate.

2.2.4.5 AXIAL THRUST BALANCE

For small turbopumps, axial thrust may be controlled by antifriction bearings alone. However, for the high bearing DN's in liquid rocket turbopumps, the axial-load-carrying capacity of the bearings generally is too low to carry all the load without some other design provisions. For example, the H-1, the MA-5 booster (fig. 4), and the MA-5 sustainer turbopumps have ribs on the backface of the centrifugal-pump impellers. These ribs cause the propellant to spin with the impeller, thereby decreasing the pressure with radial distance from the impeller tips. The effect is to reduce the net axial thrust on the rotating assembly.

For centrifugal pumps in which the axial load is too great to be controlled by balance ribs, it can be controlled by putting a shoulder on the impeller backface that mates with a labyrinth seal (fig. 1). The cavity surrounded by that seal is vented to a lower pressure region within the turbopump, thereby reducing the pressure acting on the impeller backface and thus reducing the axial thrust. This wear-ring arrangement has the advantage of being less sensitive than balance ribs to impeller axial position and therefore is generally the preferred solution.

Open-faced and shrouded centrifugal pump impellers produce very different pressure forces acting against the housing, and thus centrifugal pump shrouding strongly affects axial thrust. In general, shrouded impellers have more predictable pressure distributions and are less likely to produce forces that will cause the turbopump shaft to flex. However, pumps with unshrouded impellers have been designed to accommodate the different forces and have been operated successfully.

In high-speed, high-pressure pumps, the high bearing DN's reduce the bearing axial-load capacity at the same time that the high pressures increase the axial loads. If either the thrust

variation between operating points or a reasonable margin for error in thrust prediction exceeds the bearing axial-load capacity, the bearings are designed to move freely in the axial direction, and a balance piston (fig. 33) is used to center the rotating assembly. The balance piston accomplishes this by varying its axial force with axial position. With a series-type balance piston as shown in figure 33, if movement is to the right, a high-pressure orifice (in

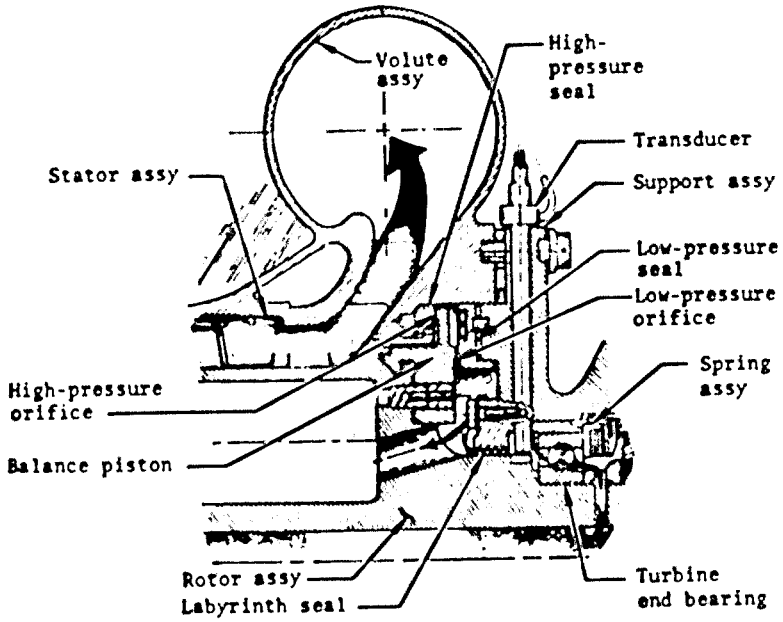

Figure 33. – Balance piston assembly.

hydrogen, rub rings) opens, and a low-pressure orifice closes such that the pressure acting against the piston increases and provides a restoring force in the opposite direction. If movement is in the other direction (to the left in fig. 33), the high-pressure orifice closes, and the low-pressure orifice opens such that the pressure and the force acting in that direction decrease, thereby permitting the net force to return the rotor to the neutral position. The J-2 hydrogen (fig. 2) and Mark 29 hydrogen (fig. 32) turbopumps utilize balance pistons, and current designs for the SSME turbopumps now under development call for balance pistons.

The rub rings of the J-2 hydrogen balance system originally were carbon, a material that exhibited low friction and associated low wear. However, rotordynamic transients caused occasional impact against the carbon rings and, on a few occasions, the carbon cracked. This

failure led to a materials testing program in liquid nitrogen. From it, (1) leaded bronze (Bearium B-10) rings with an Inconel 718 piston and (2) glass-filled Teflon (Armalon) with a titanium piston were selected. These two combinations have worked well.

Balance pistons are often made integral with the pump impellers so as to minimize axial length and therefore weight. Also, by acting on fluid that is in an impeller clearance space, the integral arrangement does not require an additional supply of fluid and, therefore, reduces leakage losses. The integral balance piston is sensitive to housing and impeller deflections and therefore requires analysis of these deflections during design. To avoid the complication of deflection analysis, a separate balance piston may be mounted elsewhere on the turbopump shaft. However, as previously discussed, this arrangement increases both axial length and leakage losses.

Ball-bearing systems for turbopumps have undergone much development. If the bearing DN's are not too high, the bearing axial springs are shimmed in such a way that the bearing loads are controlled within acceptable limits as long as the rotor axial motion does not exceed the "free motion" between the rub rings. This practice allows the rub rings to carry large transient loads during turbopump starts and stops without bearing overload (for periods of 1 or 2 sec). On the other hand, if significant rub-ring wear occurs, the bearings pick up a larger share of the load and provide some overload capacity. Duplex bearing pairs, which are free to float axially, and rubbing stops, which carry the excess axial loads, can be used to eliminate all axial loads on the bearings.

In pumps with a single spring-loaded angular-contact bearing at each end in combination with a balance-piston system, a serious problem arises in designing and setting the axial-spring loads. Differential thermal shrinkage of rotor and stator assemblies, axial shrinkage of the rotor at high speed from Poisson's effect, and differential axial growth from pressure effects – all enter into the axial bearing loads under various operating conditions. This combination of effects has often led to operation of unloaded ball bearings, an undesirable condition for high-speed operation. One solution to this problem that has worked well on two models of LH_2 pumps is to use duplex bearings at each end, the bearings being loaded against each other through Belleville springs. Two advantages result: (1) the inlet bearing set can be allowed to float axially, thus bypassing all the differential-growth problems mentioned above, and (2) the radial spring rates are doubled. The effect on spring rates can be a great advantage if shaft critical speeds need to be increased.

2.2.4.6 THERMAL BARRIERS

When a hot-gas turbine is used in combination with a cryogenic pump, thermal soakback from the hot turbine to the cryogenic pump becomes a problem if restarts are required. After turbopump shutoff, the pump temperature rises rapidly if the turbine is not thermally

isolated from the pump. This temperature rise causes the cryogenic fluid in the pump to evaporate, thereby making the restart of the pump very difficult. Consequently, special care is taken to prevent thermal paths between the turbine and the pump. Various mechanical means are available to accomplish this. Couplings have been used between the turbine and the pump rotor; e.g., an involute spline together with a quill shaft or, if centrifugal stress permits, a coupling from a dissimlar material such as plastic. Another useful coupling is the ball joint; this joint has the advantage that, as soon as torque transmission ceases, the balls sink back into their sockets, thereby disengaging themselves from the pump drive coupling and essentially disengaging the two shafts. Cooling the turbine bearing with the cryogenic fluid is often helpful in preventing temperature creepback into the pump through the drive shaft. The housings may be attached to each other with an arrangement of radial pins that act as thermal insulators; an insulating material may be clamped between the turbine and the pump housing; or a thermal barrier may be added. The thermal barrier may consist of a manifolding device through which cryogenic fluid is circulated after turbine shutoff so that the fluid may absorb some of the heat. This fluid may then be carried in the form of gas back to the cryogenic tank and used for tank pressurization.

2.2.4.7 ASSEMBLY

To avoid contamination that can lead to excessive wear rates and possible explosions, rocket engine turbopumps are assembled in a dust-controlled environment. For this purpose, most manufacturers have an area designated a "clean room." In addition to being dust controlled, the clean room is temperature controlled to permit verification of critical dimensions and to meet critical assembly dimensions.

Several other requirements are also met during assembly. For example, seals positioned in the turbopump are checked to verify that leakage will not exceed the amount specified in the assembly specification. Rotor axial and radial clearances and the bearing drag are checked and verified. Since every component is subjected to considerable vibration, all bolts, nuts, and other fasteners are secured with locking devices or lockwire. Lockwire, however, is never used within the turbopump because pieces of wire that failed in fatigue could do considerable damage; lockwire usually is used externally or in areas where there is no possibility that broken pieces can escape. As a safety measure, locking devices are never used twice. After assembly, a torque check is performed on the rotor to ensure that there is no interference between the rotor and the housing and that the drag on the seals and bearings is within the specification.

Some rotor assemblies are matched, and individual components cannot be interchanged. Matched assemblies often are necessary if extremely accurate relationships have to be maintained. For example, close clearances between the rotor tip and the housing, particularly in a multiple-stage rotor assembly, frequently require grinding the tip diameter of the rotor after assembly to avoid tip clearance losses. Interchangeability of individual components is difficult to achieve in such a case, and therefore the matched assembly often is the best answer.

The selection of materials for the turbopump components must consider fabrication needs as well as operational requirements. For example, a turbine may require weld repair after some period of operation, a process that may be easily accomplished with some materials but not with others. Some materials (e.g., Hastelloy) do not require annealing after weld repair, whereas others (e.g., René 41) must be annealed if weld repair has taken place on a finished machined component. The annealing process, however, may produce deflection in such a component and therefore may make its reusability questionable. The selection of tolerances may either ease the manufacturing process or make it more difficult by causing a higher rate of rejection. Often, the use of magnetic material eases the manufacturing process by enabling the manufacturer to use magnetic chucks and other magnetic holding devices for machining those parts.

If the turbopump is designed for long service life and overhaul capability, ease of assembly is of considerable importance. Periodic inspection of some components often is necessary; this procedure should be possible without difficult disassembly and reassembly. Therefore, rotor components are indexed against each other so that mistakes cannot be made during reassembly. Easy access without complicated tooling is provided to all points. Fasteners are selected so that they are not interchangeable. For example, fasteners within a given assembly are made different in thread size in order to prevent installation of a given bolt in an area that may require a longer or shorter bolt. Components often have to be separated by force as a result of thermal deflections that have taken place during high-temperature operation. Provisions are made for extracting those components without damanging them, usually by adding threaded holes to the clamping flanges so that bolts can be inserted during the disassembly sequence and used as extricators. Interference tolerances often are selected for components that must maintain close relation to each other. In such a case, the assembly process calls for chilling down one component or heating up the other before assembly, so that they are easily joined. Provisions for disassembly of such joints are also necessary.

2.2.5 System Interfaces

The interfaces between the turbopump system and the engine and vehicle systems affect vehicle and engine performance and maintenance costs. For example, (1) the flow pattern of the fluid entering the inducer affects pump suction performance, (2) thermal expansion and contraction can cause mechanical connections to fail if the connections are not flexible, and (3) maintenance costs can become high if the turbopump system is not designed to be easily serviced after use.

2.2.5.1 PUMP INLET

Interfaces between the propellant feed line and the pump inlet are designed to produce the desired fluid flow pattern at the pump inlet. The flow pattern entering a pump strongly

affects the pump suction performance, and a poor flow pattern can cause excessive cavitation. Therefore, bends and changes in inlet ducting cross section are minimized. If elbows too close to the inlet (approximately 15 to 20 pump-inlet diameters upstream) are required, turning vanes are usually used. If there is sufficient NPSH, tangential pump inlets often are used to minimize ducting weight and complexity. Straightening vanes at the tank exits are employed to minimize swirl of the pump inlet flow (ref. 1) and to prevent fluid vortexing in the tank.

2.2.5.2 PUMP DISCHARGE

For ease of assembly and disassembly, pump discharges usually are flanged and bolted to the discharge line. To seal this joint, O-rings are often used for noncryogenic propellants, and pressure-actuated seals generally are used for cryogenic propellants. For small pumps, the discharge lines are often welded to the pump discharge, because flanges become disproportionately large and heavy for small line sizes.

To minimize the pressure losses in the discharge line and the downstream plumbing, diffusers generally are used downstream of the pump volute tongue. The amount of diffusion is determined by optimization, because too little diffusion produces a large pressure drop due to high fluid velocity and too much diffusion produces a discharge line that, because of low fluid velocity, must be large and therefore heavy.

2.2.5.3 TURBOPUMP MOUNTING

The turbopump mounts are the connections between the turbopump assembly and the engine. These mounts support loads due to the weight of the turbopump assembly and react to loads due to machinery inertia, propellant inertia, engine gimbaling, fluid pressure differentials, vehicle flange forces, and gyroscopic forces. The mounts also adapt to the differential thermal expansion and contraction of the turbopump assembly and the thrust chamber assembly.

The most common types of turbopump mounting systems utilize struts with at least one ball-joint end connection to accommodate dimensional tolerances and differential thermal growth or shrinkage. Theoretically, ball-ended struts, arranged triangularly, yield the lightest structure by loading the members in pure tension or compression. However, a simpler arrangement is close-coupled, rigid pads at one end of the turbopump and one or two ball-ended struts at the other end to accommodate the dimensional variations. One large pad was used for the J-2S hydrogen pump with rectangular, integral keys to accommodate the shrinkage. The thick sections required for this type of design make it particularly suitable for cast structure. If the pump is very small, it often is mounted directly through the pump discharge flange. This method is best suited for designs with cast volutes.

2.2.5.4 GAS-GENERATOR CONNECTION AND MOUNTING

Gas generators usually are close coupled to the turbopump and, therefore, have some influence on the turbopump design. The GG connections join the hot-gas discharge of the GG to the hot-gas inlet of the turbine gas manifold, and the GG mounts support the GG loads and adapt to thermal expansion and contraction (ref. 9). These connections and mounts are often interrelated, and in some cases (e.g., the J-2 turbopump) the welded connections of the discharge duct also serve as the GG mount. Such a system lends itself better to relatively small turbines, because the stiffer manifold structures can more easily support the GG weight.

The major problems with the connections are that they must seal gas at extremely high temperatures and pressures (e.g., 1550° F and 920 psia on the F-1 engine). If bolted flanges are used to connect the GG to the turbine, pressure-actuating metallic seals generally are used. Dual sealing lands increase reliability if a vent to low pressure is provided between the lands (thus providing a high pressure drop only across the pressure-actuating portion of the seal) in combination with a secondary low-pressure seal that precludes external leakage even if the primary seal develops slight leakage. Welded connections between the GG and the turbine manifold provide a more reliable joint if thorough X-ray and penetrant crack-detection methods are employed. Welded connections are difficult to repair in case the GG or turbine is damaged, and therefore may not be best suited for advanced-development systems. However, these connections are more reliable and less expensive for high production rates once the system is developed.

Gas-generator mounts must adapt to a high degree of thermal expansion and contraction. Solid-propellant GG's for start systems can produce a severe tendency to low-cycle fatigue. Maximum transient gas temperatures can be as high as 2400° F (above 2000° F for about 1 sec). On the J-2S liquid-hydrogen turbopump, the steep temperature gradients during starts caused a Hastelloy-C manifold to crack after ten starts. A change to 347 CRES to obtain greater elongation resulted in warped flanges with consequent leakage. The final configuration was made of Inconel 625 with a zirconia lining to reduce the temperature gradients.

2.2.5.5 TURBOPUMP SERVICE ON THE ENGINE

When a turbopump is disassembled, it must be removed from the engine and, after reassembly, may have to undergo a full-speed operational test. It is obviously advantageous from a time standpoint to be able to replace seals, instrumentation, and perhaps bearings without major disassembly. If provisions for performing these procedures are not made in the turbopump design, costly removal from the engine may be necessary each time one of these relatively simple tasks is performed. In the extreme, major turbopump disassembly followed by operational testing may be necessary.

It is highly desirable to design the turbopump system such that main shaft seals may be replaced without disturbing the bearing assemblies and that leak checks following the installation of seals can be made to verify the correctness of the installation. In addition, provision for hand turning the turbopump permits a simple torque check for early detection of damaged bearings, excessive rubbing, and worn seals. Boroscope ports are sometimes provided for inspection of turbopump condition prior to reuse.

2.2.5.6 TURBOPUMP OVERHAUL

For major overhaul or disassembly, the turbopump is removed from the engine. Most turbopumps (e.g., those of the J-2 engine) then require a full-speed operational test before they are reinstalled on the engine. If the turbopump overhaul involves other than a simple change of bearings and seals, the engine should then be hot fired for recalibration. Therefore, simple turbopump overhaul is less costly than replacement, because a full-speed operational test of a turbopump is generally less costly than an engine recalibration.

The cost of replacement parts is an important consideration in the design decisions as to whether to integrate certain parts for ease of original manufacture. For example, fir-tree-mounted turbine buckets can be replaced individually; if the turbine buckets are integral with the disk, however, the entire turbine wheel may have to be replaced if one bucket is damaged. In deciding which design to use, the cost of original manufacture is weighed against the probability of failure.

The turbine rotor assembly and the pump rotor assembly are often designed to be balanced individually. This permits the replacement of either unit without rebalancing the other. In the case of the J-2 fuel turbopump (fig. 2), this approach is extended to permit the replacement of the entire turbine assembly (manifold, stators, and rotor assembly) without disturbing the shaft seals or bearings of the turbopump.

2.2.6 Start Systems

Energy storage systems that supply initial drive power for the turbine include the liquid propellant main tanks, pressurized-gas start tanks, pressurized-liquid-propellant start tanks, and solid-propellant start cartridges. All of these systems have been used on production flight engines and are within the current state of the art. The type of start system on specific engines is shown in table I. The selection of an energy storage system for starting an engine is dependent on several factors including maximum allowable start time (time to 80-percent thrust), repeatability of starts, number of starts, tanked propellant conditions, environmental conditions, weight, commonality of start and normal-operation control valves, and type of turbine drive cycle.

The primary areas of impact of the start system on turbopump design are provision of adequate stall margin during the pump acceleration transient, and possible provision of small boost pumps upstream of the main turbopumps. Adequate pump stall margin normally can be provided by adjustment of the energy level of the start system, although it may be necessary also to provide greater margin through pump design. The J-2 engine system, which uses a pressurized-gas start system, was initially designed for a storage pressure level of 800±50° psia and a temperature of 200±50° R. These values were selected to permit the start tank to be refilled, for restart capability, from the thrust-chamber fuel injector manifold. During the initial phase of the J-2 engine development program, there was a tendency for the fuel pump to stall when the oxidizer system was primed under the above start-tank conditions. This problem was corrected by increasing the fuel pump speed to move the operating point during the start transient farther from the pump stall curve. The additional stored energy required to increase the fuel pump speed was obtained by increasing the start-tank pressure level to 1250 ± 50 psia.

Small boost pumps are considered for liquid-propellant main-tank start systems when marginal start power is available. These small turbopumps have small rotating inertia and low torque requirements and can be designed to operate with a wide range of inlet propellant conditions to minimize thermal preconditioning requirements.

2.2.6.1 MAIN-PROPELLANT-TANK HEAD

This start system uses the head available in the main propellant tanks to provide the energy for initial turbopump rotation. This method is used in the F-1 and RL10 engines and, in concept, is the simplest of the start systems.

One of the principal advantages of this sytem is minimization of weight. The reduced weight results from start repeatability requirements that make it necessary for systems with separate start tanks, operating under blowdown conditions, to have either multiple tanks or components for refilling in order to accomplish in-flight restarts. These weight-reduction benefits are amplified for engines that operate on a closed cycle with turbines that normally operate with a high flowrate and low pressure ratio; providing these conditions with propellants from separate start tanks would require large, heavy systems.

Propellants from the main tanks can be used for engines that utilize either the exhaust from a bipropellant preburner or gas generator or the thrust chamber cooling fluid as a source of energy to drive the turbines. Although the exhaust from a bipropellant GG operating under tank head was used with the F-1 engine, it should be noted that this kind of circuit normally is a low-flow circuit, and the GG should not be operated greatly off its design mixture-ratio conditions. However, for engines with low-pressure-ratio turbines operating on a staged-combustion cycle (turbine working fluid exhausting to thrust chamber injector), a main-propellant-tank start system may develop combustion instability if the GG (preburner) is designed for liquid propellants, since in effect it would be operating under deep throttled

conditions. Solution of this problem requires a sophisticated injector or control system. Use of the thrust-chamber cooling fluid as a source of energy to start the turbopumps, as in the RL10 engine, poses different problems. The engine must be conditioned within certain limits from what may be widely varying initial conditions to provide start repeatability. Under certain initial conditions, only marginal power may be available for turbopump breakaway torque.

Other problems associated with main-tank-head starts for certain types of engines and mission requirements are exemplified by early development of the J-2 engine. The start method was eventually changed from tank-head start to a pressurized-gas start system for the following reasons:

(1) The start transient was too slow and unrepeatable for the clustered engines of the Saturn S-II stage (5 to 6 sec from start signal to mainstage).

(2) Because the engine was to be used in several different applications and had to meet orbital start requirements, engine inlet-pressure requirements were low and varied over a wide range (fuel pressure = 27 to 46 psia, oxidizer = 33 to 48 psia). As a result of the wide range of start conditions, a common start sequence was not feasible.

(3) A common start sequence at sea level and altitude was not feasible because of the large difference in turbine exit pressure.

Development and qualification of the SSME will advance the state of the art for main-tank-head start systems to other types of engine cycles and wider ranges of mission start requirements. This advance will be accomplished by placing a portion of the start transient under closed-loop control and using a digital-computer controller package to monitor and command engine operation. The SSME also will incorporate low-pressure turbopumps upstream of the main turbopumps. These low-power turbopumps can operate with a wide range of inlet propellant conditions and, being low in rotating inertia, are capable of fast-start transients.

2.2.6.2 PRESSURIZED-GAS START TANKS

This system, employed on the J-2 engine system, utilizes high-pressure gas stored in a small engine-mounted tank to initially spin the turbines during engine start. This system typically includes a tank; fill, vent, relief, discharge, and check valves; and a duct connecting the start tank to the turbine. Both inert gases (e.g., nitrogen and helium) and fuels (e.g., hydrogen) have been used successfully as the turbine drive fluid. The advantage of using the engine fuel is that the start tank can be replenished during engine operation. This procedure has been developed on the J-2 engine; however, up to 60 seconds of mainstage operation is required to refill the start tank. The alternatives are to use multiple tanks or a single large tank for

restart capability. The latter of these alternatives results in successively lower start-tank pressures for each restart; this lower tank pressure must be compensated for to achieve repeatable starts. Pressurized-gas start tanks are also at a disadvantage when considered for closed-cycle engines because the high-flow, low-pressure-ratio turbines result in large fluid-storage requirements.

Tank volume is established on the basis of the energy required to start the engine. Pressure is the most significant independent parameter for this type of energy storage system. It has been empirically determined that, for minimum weight, the gas storage system should be designed for pressures between 1500 and 3000 psia. Because of these high pressures and the large number of components (leakage paths), the system is susceptible to leakage.

A critical component for pressure/temperature control of cold stored gas is the relief valve. Relief valves are normally considered as safety devices. Therefore, tolerances on relief and reseat pressures are large, usually ±5 percent on relief pressures, with the reseat pressure being 10 to 15 percent below relief pressure. These tolerances are not adequate for pressure control of start tanks where consistent start energy is required. A pressure-regulator type of device or a narrow-band relief valve is required.

2.2.6.3 LIQUID-PROPELLANT START TANKS

Liquid-propellant start tanks have been used on the Atlas MA-5 sustainer engine and on early versions of the Thor MB-3 engine. The start tanks can be ground based with disconnect devices for single-start engines or they can be mounted within the vehicle. Very repeatable starts (from engine to engine) can be provided by liquid-propellant start tanks. However, this type of system is very complex and requires high-pressure propellant tanks and pressurization, fill, vent relief, and tank discharge valve systems.

State-of-the-art liquid-propellant start-tank systems have been used with the LOX/RP-1 propellant combination; however, many of the design elements are applicable to other propellant combinations. The tanks are filled with propellants and pressurized prior to engine start. Tank capacities and pressure levels are established to accelerate the turbine to a speed sufficient to produce pump discharge pressures that will allow the engine to bootstrap into mainstage operation. The ratio of tank pressures governs the mixture ratio during start.

This method of engine start has not been used where engine restart is required. Repeatable refilling of start tanks with cryogenic propellants such as liquid oxygen and liquid hydrogen is difficult because of rapid vaporization due to warm tanks and unpredictable heat transfer rates.

Since the two liquid propellants must be burned to provide the energy for initiating rotation of the turbopumps, a separate small combustor is required for engine cycles that do not use

a gas generator to provide a turbine drive fluid. As with pressurized-gas start systems, liquid-propellant start tanks are at a disadvantage when considered for closed-cycle engines because the high-flow, low-pressure-ratio turbines result in large fluid-storage requirements.

2.2.6.4 SOLID-PROPELLANT START CARTRIDGE

Solid-propellant start cartridges have been developed into very reliable start systems for the YLR87-AJ-7, YLR81-BA-11, J-2S, and current versions of the MB-3 and MA-5 engine systems. Restart capability is available by using a separate cartridge for each start. The system for the J-2S engine provides three starts with separate cartridges. However, because of residue contamination, the solid-propellant start technique cannot be used with closed-cycle engines in which the turbine exhausts to the thrust-chamber injector.

Design considerations involved in the integration of a solid-propellant GG into a turbopump start system include determination of burn duration and flowrate, control of grain thermal environment, integration with the ignition system for the liquid-propellant GG, and selection of the solid-propellant start-cartridge method for multiple-start systems.

A detailed analysis must be made of the engine start system to determine the required solid-propellant burn duration and flowrate. Both parameters are critical to start time, repeatability, prevention of thrust overshoot, and start reliability. The solid-propellant start cartridge on the J-2S engine starts the engine by accelerating the pumps to approximately 50 percent of their mainstage speed. During this acceleration period, there are mixed-phase propellants in the pumps, because the vehicle propellant ducts contain mixed-phase propellants that must pass through the pumps and be replaced with subcooled propellants from the propellant tanks prior to burnout of the solid-propellant start cartridge. The J-2S engine does not require propellant bleeding or propellant recirculation to achieve engine start, since the pumps will start on mixed-phase propellants. The nominal grain burn time is 2.3 seconds and the flowrate increases at an exponential rate from 2.3 lbm/sec to 9.9 lbm/sec at burnout. The total start-cartridge propellant weight is approximately 13 lbm.

The performance of the solid-propellant start cartridge is sensitive to grain temperature, because the grain burns faster and provides a higher flowrate as the grain temperature is increased. Grain-temperature effect is strongly dependent on propellant composition. The start cartridge for the H-1 engine is conditioned to 50° ± 10° F for 24 hours prior to installation on the engine and then is maintained, after installation on the engine, at 40° to 75° F by the vehicle boattail environment.

For the J-2S engine, an orbital heat-transfer analysis was conducted to determine the maximum expected temperature range of the start-cartridge grain. This experimental engine was a multiple-start engine with a three-start mission use and up to 10 hours coast time between starts. The engine starts satisfactorily with a grain-temperature range of −50° F to

+140° F. However, start time varied from 3.2 to 4.2 sec. The J-2S turbine drive system was made less sensitive to grain temperature by (1) utilizing a check valve in the combustion chamber tapoff line, a step that allowed automatic change of the power source, and (2) using a low-energy solid-propellant start cartridge that allowed power overlap without thrust overshoot.

During the initial development of the solid-propellant start cartridge for the MA-5 and H-1 engines, contamination of the injector for the liquid-propellant GG was a major problem. Combustible products forced into the LOX injector manifold by the solid-propellant start-cartridge gas caused detonations when LOX entered the manifold. A gaseous nitrogen purge for the gas-generator LOX manifold was developed to prevent contamination in the H-1 engine gas generator. A series of tests was conducted to determine the required purge pressure level and flowrate to prevent contamination and maintain reliable ignition.

The ignition of GG liquid propellants in the H-1 engine system is accomplished by the solid-propellant start cartridge, which burns for approximately 100 msec after LOX and RP-1 enter the combustor. To ensure reliable ignition and minimize the start cartridge overlap, two pyrotechnic igniters are used to ignite the gas generator. These igniters are autoignited by the heat from the start cartridge and burn for approximately 2 sec to provide a redundant heat source to ignite the liquid propellants.

2.3 DESIGN EVALUATION

2.3.1 Engine-System Characteristics

If the engine system is to meet specifications, the on- and off-design operation of the turbopump system must be within certain limits. The turbopump system must provide the turbine power necessary to match the required pump power at all test and flight conditions. The turbopump system must also be designed such that all delivered engine systems will meet a nominal performance specification. Therefore, the effects of variations in turbopump system and engine component tolerances and efficiency are considered during the turbopump system design.

2.3.1.1 DESIGN-POINT SYSTEM BALANCE

In a design-point system balance, known factors such as engine type, chamber pressure, nozzle area ratio, mixture ratio, and thrust are combined with initially assumed factors such as pump efficiencies, turbine efficiencies, turbine pressure ratio (for a GG or a tapoff cycle), turbine inlet temperature, and various engine performance factors to predict the pump headrise, pump flowrate, and turbine flowrate requirements. In making this balance, the

turbine power is equated to the sum of the oxidizer pump power, the fuel pump power, and any auxiliary power that might be in this system.

A design-point system balance of the final design-point characteristics of the turbopump is also necessary because refinements and changes that occur during the detail design of the rocket engine system in turn can affect the turbopump system operation. For example, during the development of the MA-5 sustainer engine, the turbine and pump efficiencies when tested were below the initial values used in the engine-system design balance. This condition necessitated changes to increase the turbine drive pressure available from the gas generator so that the engine would meet its rated thrust value.

2.3.1.2 OFF-DESIGN SYSTEM BALANCE

Frequently, an off-design operating condition of the turbopump system may be more severe for a particular component than the nominal design condition. Therefore, if the entire operating range is not carefully investigated, a turbopump system that operates satisfactorily at the design point may either fail or perform unsatisfactorily during off-design operation. An example of the effect of operating range on turbopump system design and operation can be found in the J-2 upper-stage engine. To meet flight requirements, this engine delivers 230 000 lbf thrust while operating at an oxidizer-to-fuel mixture ratio of 5.5; the thrust then decreases to a value of 170 000 pounds at a mixture ratio of 4.5. The maximum power requirement for the fuel pump occurs at a mixture ratio of 4.5, while the maximum power requirement for the oxygen pump occurs at a mixture ratio of 5.5.

The first step in defining the operating range is to determine the range of planned operation. A system balance (sec. 2.3.1.1) that includes the predicted operating characteristics of the turbopump is used to determine the entire range of turbopump operation over the planned engine throttling and mixture-ratio excursions. In addition to the predictable excursions of turbopump operation (which are due to known variations of pump inlet pressure, atmospheric pressure, engine throttling, and mixture ratio), engine component variations due to manufacturing tolerances and the effect of these variations on the required turbopump operating range must be allowed for in the initial design. These effects are treated by first obtaining known component tolerances from existing liquid rocket engines as a basis for estimating, for example, the hydraulic-resistance tolerances of lines, valves, and nozzle coolant passages; the tolerances in the pump head/flow and efficiency/flow relations; and the tolerances of the main-engine nozzle, the turbine-exhaust nozzle, the controls (sec. 2.3.1.3), etc. The tolerances of all of the components are assumed to have a statistically normal (Gaussian) distribution. The effects of all of the component tolerances are not algebraically added, since this would be a "worst-case" condition with a very low probability of occurrence. The component tolerance effects are summed statistically by taking the square root of the sum of the squares of the effect of each component. The

individual component effects are determined either by performing an engine balance assuming that the given component is at the extreme of its tolerance range or by using a linearized version of the engine-system equations to determine the influence coefficients for each of the engine components under consideration.

2.3.1.3 CONTROL CONSTRAINTS

The control points used for regulation of engine thrust and mixture ratio can markedly affect the required pump discharge pressure and thus the turbopump system design. The majority of engines to date have used a simple open-loop system to control turbopump power. Either calibration orifices were used to control the flowrate to the turbine GG or a pressure regulator was used to control the oxidizer flow to the GG. The MA-5 and MB-3 rocket engines are examples of the latter. The J-2, F-1, and H-1 rocket engines all use calibration orifices in the turbine gas-generator lines to set power level. The RL10 engine used fuel (hydrogen) heated by being passed through the thrust-chamber cooling jacket to power the turbine; to control turbine power, a control system senses thrust chamber pressure and adjusts a turbine bypass valve. The RL10 is one of few engines to employ a closed-loop thrust-control system.

Closed-loop mixture-ratio control has been used in a number of operational rocket engines. This control is accomplished either with the main propellant valves or with a valve controlling propellant bypass around the pump. The MA-5 sustainer engine utilized control of the main propellant valves, whereas the J-2 engine has an oxidizer-pump bypass control valve to regulate mixture ratio.

In engine systems that use orifices in the GG feed lines for thrust calibration and a turbine bypass for mixture ratio, there is a large change in thrust and subsequently in pump discharge pressure as mixture ratio is varied (sec. 2.3.1.2). This type of control system is unsuitable for high-pressure staged-combustion cycles, because these systems basically exhibit wide variations in pump discharge pressure as a consequence of the series arrangement of the thrust chamber, the turbine, and the turbine hot-gas generator.

During the design evaluation, the influence of the type of engine control system on the operating requirements of the turbopump system must be evaluated. Typical effects of three types of mixture-ratio control on pump discharge pressure requirements for a staged-combustion cycle are presented in figure 34. As shown, hot-gas valves in combination with a liquid-fuel valve decrease the pump discharge-pressure requirements relative to a system with a liquid-fuel valve alone. However, hot-gas valves have not reached the level of technology of liquid valves for control purposes and usually are avoided. Also, the systems with the added hot-gas valves have a slower response and are more complex. Therefore, the interaction between the type of control system and the turbopump design should be assessed before final system selections are made. Reference 30 gives the results of a detailed evaluation of a control system for an engine with a staged-combustion cycle.

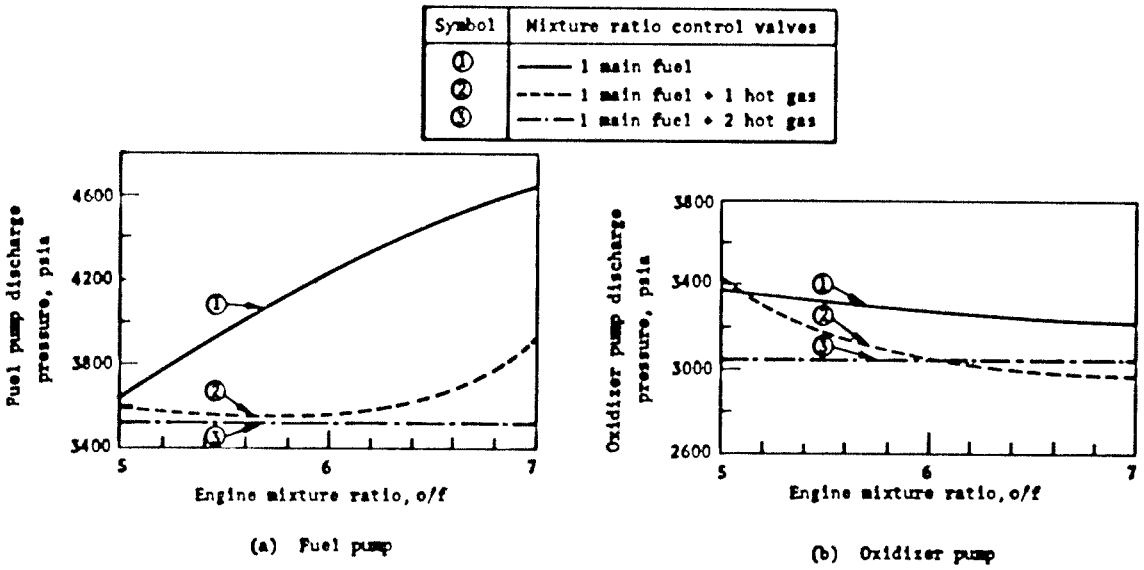

Figure 34. – Typical effect of type of mixture-ratio control on pump discharge pressure (staged-combustion cycle).

2.3.2 System Dynamic Analysis

The dynamic conditions imposed on the turbopump system during the transient operation of the engine system need to be evaluated fully to ensure that the turbopump will meet these requirements. Turbopump system characteristics that may have a strong influence upon the transient response of the engine system include pump type, turbopump time constant, slope of the pump head/flow characteristic curve, pump NPSH requirements during start, and turbine and pump arrangement. In addition to these factors, engine system factors such as engine starting method and propellant combination are highly important to the requirements imposed on the turbopump system.

2.3.2.1 START

Engine thrust buildup follows turbopump speed buildup. The turbopump time constant can be used as a measure of the turbopump speed buildup and the response rate. The turbopump time constant is a function of pump rotational inertia and shaft torque:

$$\tau = \frac{I}{T_q N} \tag{15}$$

where

τ = turbopump time constant, min.

I = turbopump rotating mass moment of inertia, lbm-in.

T_q = turbopump shaft torque (design value), in.-lbf

N = turbopump rotational speed (design value), rpm

The importance of turbopump system characteristics for engine system start varies greatly with the exact engine system being considered. For example, the turbopump system characteristics do not have a strong influence on the starting of the H-1 booster engine, because this engine utilizes a solid-propellant gas generator to supply initial starting energy to the turbopump. The high-pressure, high-energy gases rapidly accelerate the pumps and minimize the effect of turbopump inertia. The rapid start also minimizes the effect of the pump head-flow characteristic and of the pump NPSH requirements. On the other hand, the turbopump system characteristics are much more influential on systems such as the F-1 booster engine, which employs a tank-head type of start. The tank-head start employs the pressure available from the vehicle tanks in order to initially supply propellants to the gas generator for the combustion gases to power the turbine. On this type of engine, reductions in start time can be achieved by reducing the turbopump time constant (eq. (15)). The time constant varies directly with the rotating inertia and, therefore, decreases in inertia will reduce time constant. Increases in turbine torque during start also will reduce the time constant.

The ground-level atmospheric pressure adversely affects turbine developed torque at low operating levels for the GG-type engine by reducing the operating pressure ratio. At altitude, the turbine pressure ratio will always be high, and significantly more power will be developed for the same turbine flowrate. For ground-level starts, turbine low-speed torque can be increased by enlarging the nozzle area, thereby increasing the gas flow. A hot-gas valve (which opens at low power levels but restricts the flow at mainstage) in series with the turbine is a positive device for reducing start time. For example, a 10-percent increase in nozzle area or turbine flow may reduce start time as much as 50 percent.

On an engine with two turbopumps, the relative turbopump time constants can influence the mixture ratio during the start transient. A relatively high time constant on one turbopump will cause a lag in pump speed buildup and shift the mixture ratio during start. On a LOX/LH_2 system, a bias to reduce the oxidizer speed can be very beneficial, since the bias will avoid temperature spikes in the gas generator.

The shape of the curves for pump head/flow characteristics can be significant in engine transient behavior. Steep slopes will tend to stabilize flowrate and reduce discharge pressure variations. For a bootstrapping system with a gas generator, variations in the pump discharge pressure may produce excessive excursions in GG temperature unless active controls are used.

When liquid hydrogen is utilized as a thrust chamber coolant, the head/flow characteristics of the fuel pump must be carefully analyzed. During the start-transient buildup, the relation between the pump and the thrust chamber will force the fuel pump to operate at reduced values for the ratio of flowrate to rotational speed (Q/N). This is equivalent to operation at reduced flow coefficient ϕ and can result in stall. The J-2 engine was originally designed for a tank-head start. Digital computer simulation of the engine start indicated a long slow start during which the fuel pump encountered the discontinuity due to stall in the head/flow curve. Stall in turn produced a head loss and a further reduction in Q/N. When Q/N dropped below approximately 1/3 of the design value, hydrogen vaporized in the pump, a condition that resulted in a complete loss of discharge pressure and a total stoppage of fuel flow. To solve the problem, the tank-head start for the J-2 engine was abandoned and a pressurized-gas start system was used successfully.

Pump cavitation during engine start can affect pump speed buildup. When a pump cavitates, less energy is required for fluid pumping and more is available for increasing the rotational speed. An engine that routinely experiences pump cavitation during start can be sensitive to cavitation parameters. Typically, start-transient pump cavitation is observed during high accelerations of suction-line flowrate. Such accelerations can be produced by a high-powered turbine start or a rapid-opening valve in the main propellant line. Under these conditions, start time and thrust buildup rates may vary with pump cavitation characteristics and propellant conditioning.

Engine system studies conducted during the past several years have compared the transient dynamics of turbine drive cycles (sec. 2.1.1.4) that differ from those actually used in production rocket engines. Among these cycles are the thrust chamber tapoff and the heat exchanger. For the thrust-chamber-tapoff cycle, with O_2/H_2 propellants and a separate turbine for each pump, a parallel-flow turbine arrangement will produce a faster start and also minimize the starting differences due to sea-level and altitude environments. A series-flow turbine arrangement (because atmospheric pressure would affect the exhaust pressure of the second turbine) would show a large difference in starting characteristics when sea-level and altitude starts are compared. The overall start transient for this system is primarily associated with the speed buildup of the oxidizer pump because, for a series turbine arrangement, the oxidizer turbine is usually the second or downstream turbine.

The start dynamics of a heat-exchanger cycle, in which a thrust-chamber heat exchanger furnishes heated hydrogen gas to power the turbines, favors a series turbine arrangement. In

this case, the series configuration achieves a faster ground-level start, since the overall start transient is primarily associated with the speed buildup of the fuel turbopump.

2.3.2.2 THROTTLING

In future applications, the engine thrust may be varied (throttled) during the mission. Although no operational turbopump engines have been throttled, considerable information concerning rocket engine throttling is available both from experimental rocket system development and from analytical computer-simulation studies. This section will discuss the dynamic response aspects of rocket-engine throttling.

Throttling response becomes important when rapid rates of thrust change must be achieved to meet space vehicle requirements. Turbopump system response to throttling commands is determined by the turbopump time constant (sec. 2.3.2.1). As shown in equation (15), the turbopump moment of inertia and the turbine driving torque are the factors that determine the time response of the system. Engine development and checkout for space launches make it desirable for the engine to exhibit similar throttling behavior for both altitude and ground-level environments. This is especially true for large engine systems where the simulation of high altitude environment would be costly. For a thrust-chamber-tapoff turbine-drive system, a parallel-turbine arrangement is more desirable than a series arrangement, because the series arrangement is more sensitive to variations in atmospheric pressure. For low-thrust engines, altitude simulation can be performed more easily and, therefore, either turbine arrangement can be utilized. For a heated-hydrogen heat-exchanger cycle, a series-turbine arrangement has been shown through computer simulation to be more desirable than a parallel arrangement.

The choice of the type of throttling control system largely fixes the maximum response capability of the system. Generally, throttling of the hot turbine working fluid gives slower response than direct throttling of the liquid-line valves to the main thrust chamber. However, the additional pressure drop necessary for throttling of the liquid-line valves requires the turbopump to operate at a speed higher than that for throttling with hot-gas valves.

Pump head/flow characteristics are particularly important on the hydrogen side. Flow coefficients must be maintained high to prevent vapor formation within the pump. Liquid-line throttling is attractive from the standpoint of rapid thrust response, but it increases pump discharge pressure during throttling and can create flow coefficient problems on the hydrogen pump. To augment flow, hydrogen can be recirculated around the pump. The ramifications of hydrogen recirculation have not been completely determined, but the feasibility has been demonstrated.

2.3.2.3 SHUTDOWN

Engine shutdown normally is accomplished by first cutting turbine power and then closing off the main propellant flows. With the main propellant valves downstream of the pumps, inlet pressure surges will be caused by both pump speed decay and the closure of the main propellant valves. Pump speed decay will tend to be exponential and produce an immediate flow deceleration and suction pressure surge. Valve closure and the resultant flow deceleration will depend on design details for the valve. A 500 msec cutoff is fast for a large engine system and necessitates very rapid closures of main-line valves. Propellant surge pressures of several hundred psi can result. The pump inlet typically is the most critical structure and must be designed to withstand the overpressure. The maximum inlet pressure is the sum of the main tank pressure, the cutoff surge pressure, and the fluid column pressure resulting from the end of vehicle acceleration.

The fluid surge pressure at engine shutdown is entirely analogous to the water hammer phenomenon that results from rapid closure of the outlet valve of a simple pressure conduit carrying fluid flowing with steady uniform velocity. The following parameters influence the magnitude of the surge pressure:

- Propellant compressibility
- Inlet-line geometry (line diameter and length upstream of shutdown valves)
- Closure rate of the propellant valve
- Rate of decay of pump propellant flow
- Modulus of elasticity of inlet-line material

For long inlet lines, as in the forward tank of a vehicle, high surge pressures can result from rapid valve closure. In order to define the maximum surge, a detailed analysis of transient conditions needs to be performed. Liquid oxygen and RP-1 generally will produce higher surge pressures than liquid hydrogen; because of the low hydrogen density, the feed system has a low inertance that reduces surge.

An engine system can also be shut off with main-line valves upstream of the pumps. In this configuration, the pumps will be forced into deep cavitation and will not experience high surge pressures. However, the surge pressures in the inlet duct upstream of the valve will need to be considered.

2.3.2.4 SYSTEM INSTABILITY (POGO)

Pogo is a vehicle-system instability involving the rocket engine, propellant tanks and feed system, vehicle structure, and forward payload. The instability oscillation typically is low frequency (5 to 25 Hz) along the vehicle longitudinal axis. The rocket engine propellant pumps are important components of the overall system and must be considered when total system resonant frequencies are calculated.

Pump inlet conditions are influenced by fluid compliance and inertance. The compliance is a result of small vapor pockets forming along the leading edges of the inducer vanes; these small vapor pockets markedly change the effective fluid compressibility. The manner in which a relatively high fluid inertance is formed is not completely understood, but pump dynamic testing has revealed that the fluid displays both compressibility and inertance effects. Some data suggest that a complete description of the fluid would require a distributed system of inertance and compliance terms.

The fluid compliance and inertance at the pump suction, coupled with the relatively high inertance of a suction line, create a resonant system with low damping. Compliance and inertance vary with pump speed, flowrate, fluid temperature, and suction pressure. Therefore, during a flight, the suction system resonance will vary. The vehicle also has resonant frequencies that are functions of the structure and mass distribution. As the propellants are consumed and the vehicle mass decreases, resonant frequencies increase. When a vehicle structural mode matches a pump suction mode, a condition that can display Pogo oscillations is created. Pump suction-pressure oscillations and the accompanying flow oscillations feed through to the thrust chamber and produce small thrust oscillations. These oscillations in turn feed into the structure and cause relative motion in the vehicle. The loop is then reinforced by a feedback from vehicle motion to propellant acceleration at the inlet duct, thereby creating pump inlet-pressure oscillations. Since the vehicle mass is continuously changing, the tuning of the structure and feed system (if it occurs) is normally transitory.

Because the vehicle geometry and operating parameters at the pump inlet play such a strong role in a Pogo instability, potential changes in pump inlet conditions through design changes cannot guarantee elimination of Pogo instabilities. Pump design considerations at present are limited to steep head/flow characteristic curves, which reduce oscillation amplitudes resulting from high pump gain.

Analytical techniques to predict the occurrence of Pogo have been developed (refs. 31 through 34). Empirical data are used to determine pump compliance and inertance values, and vehicle structural dynamics are obtained from a structural analysis. System operational and design changes are then investigated analytically to determine the effects on Pogo.

2.3.3 System Development Testing

The turbopump system is tested during development to ensure that the system meets design requirements. A certain amount of the testing can be conducted on a turbopump test stand, while the final testing as part of the engine system verifies that the turbopump system will operate satisfactorily in the operating environment of the rocket engine.

2.3.3.1 TURBOPUMP SYSTEM

Testing of the turbopump system usually begins with a certain amount of component and subsystem testing. Volutes, pump back plates, manifolds, and similar components are generally pressure tested individually or as subassemblies as early as possible to confirm or modify the design; the tongue region in volutes often is critical. Brittle-lacquer techniques to locate the regions of maximum stress and strain gages to evaluate the stress generally are employed. This testing for structural integrity is routine in nature, but proper attention to it can avoid serious problems.

Pump rotors or turbine disks that are designed to operate near the speed limits are generally spinpit tested. Prototype components are first tested to the point of general yielding (as determined by precise diameter measurements before and after testing) and then are operated to burst speed. This procedure verifies the design and establishes actual safety margins.

For critical applications, it is also customary to spin test each production part. The spin test is conducted with critical surfaces in the semifinished state but with all holes and other discontinuities machined (if in high-stress regions). Spinning to produce yielding in such regions produces reverse residual stresses and can increase the speed capability of the part.

In standard balancing procedures, the major components and then the assembly are balanced at 1000 rpm on an adequate balancing machine. However, full-speed balancing up to full design speed of 34 000 rpm was performed on a Mark 25 liquid-hydrogen pump. The balancing was done in five planes in a high-speed vacuum chamber with a Freon-21 bearing lubricant (in place of the liquid hydrogen normally used). By use of quick-developing photos of oscilloscope traces, rapid weight corrections were made. Shaft excursions were measured with capacitance-type gap gages. With these procedures, the peak-to-peak shaft excursions were reduced from 0.015 in. to 0.002 in.

Initial testing of the turbopump assembly (or the pump only if it is driven by separate means) is conducted to establish the structural integrity and to verify pump and turbine performance before installation in the engine. The head/flow (H-Q) map of the pump is checked, and cavitation-performance runs are made. Testing must proceed very carefully at

first to preclude any rubbing problems or seal leakages that could lead to catastrophic failure. Various test fluids can be used, and the design must accommodate operation with these fluids.

Air often is used as the test fluid for all types of pumps, because of the cost of propellants and the size and complexity of drive equipment. Air testing is especially suitable for liquid-hydrogen pumps, since low-speed operation with air can produce a compressibility effect comparable with that of hydrogen. Low-temperature effects, of course, are absent with either air or water tests. Liquid nitrogen has often been used for testing liquid-oxygen pumps to avoid the explosion hazard while providing low temperature. However, the high bearing and seal wear rates that result from liquid-nitrogen testing must be considered when the test program is formulated.

The turbopump is properly instrumented for the turbopump-system tests. Measurements normally include inlet and outlet pressures, temperatures, flowrates, and speeds. Also, accelerometers are mounted on the pump to detect high vibration levels.

Tests on seals, bearings, and similar components and material compatibility tests are run individually prior to turbopump system testing. Then, in the turbopump-system tests, the components are verified as a part of the entire assembly.

One aspect of turbopump-system testing that bears additional emphasis is the "limits testing" concept. Testing according to this concept exposes the turbopump to the extremes of the operating environment to be experienced in final engine-system and flight testing. The purpose of limits testing is to expose development problems early in the development cycle and to avoid costly catastrophic failures during the engine-system test program.

2.3.3.2 ENGINE SYSTEM

The turbopump must perform to design specifications if the engine system is to meet its rated thrust and operate at the design mixture ratio. Engine-system testing, to the turbopump designer, means testing of the turbopump assembly as an integral part of the complete engine assembly. The turbopump is usually well instrumented during the engine-system tests. Measurements include inlet and outlet pressures, temperatures, flowrates, and speeds. Provisions for applying turning torque by hand between test runs are necessary to make sure that excessive turning resistance is not present. Torque checking can detect any rubbing or high rolling resistance due to seal or bearing problems.

The operating environment within the engine system can be very different from that in hot-gas testing of the turbopump system, especially as far as vibration levels are concerned. The compression effect of the fluid entering the pump that can lead to Pogo instabilities can be simulated more closely by engine-system testing, since the inlet-line geometry to a large

extent resembles that of the flight system with the propellant tankage relatively close coupled as it would be on the flight system. In turbopump-system tests, the propellant tanks are kept more separated with the result that the inlet-line geometry usually does not closely simulate the flight system. Additional propellant shutoff valves and fire-extinguishing systems are used on engine-system tests to help prevent catastrophic accidents.

The thermal conditioning requirements of the turbopump system are best defined through tests performed during engine tests. A fuel turbopump stall that occurred during the start of the J-2 engine was related to the thermal conditioning requirements of the main thrust chamber. A solution to this problem was to incorporate thrust-chamber conditioning techniques to reduce fuel-system resistance during engine start. Thermal conditioning of the J-2 turbopump was found to be necessary, and a recirculation system using small electrically driven pumps was added to the vehicle system. With this arrangement, propellant from the main tank is recirculated through the main pump and the thrust chamber and then returned to the tank. An intermediate position on the main oxidizer valve was provided to prevent excessive speed buildup of the oxidizer turbopump.

Explosions in liquid-oxygen pumps have occurred during engine-system testing. Explosions on the H-1 turbopump were prevented by first installing a shaft deflection device to measure shaft radial movement. The results showed that at start there were large deflections that were related to propellant main valve opening time and sequence. Inlet liners of Kel-F material were incorporated. Rubbing between metal rotating hardware and the Kel-F liner was not detrimental, and the solution was satisfactory.

Several liquid-oxygen pump explosions occurred during engine-system testing of the F-1 turbopump. Due to the high horsepower and dynamic environment of the pump, normally accepted spline and pilot fits were insufficient to prevent fretting and rubbing that ignited the pump materials in the liquid-oxygen environment. Fits on all rotating parts were tightened, and thermal techniques (e.g., heating the impeller so that it could be slipped on the unheated shaft) were used to assemble the pump so that at liquid-oxygen temperature all parts were operating under an interference fit.

In the F-1 turbopump, leakage of the oxidizer past the primary seal in combination with leakage past the fuel seal would result in propellant contact and subsequently in an explosion. The design solution was to use an intermediate seal purged by inert gas between the oxidizer and fuel seals. The purge gas is expelled from each side of the seal at a slot and drained overboard by a drain line.

On the H-1 engine, momentary leakage of LOX through the LOX seal occurred at engine start. This leakage was caused by temporary pressure imbalance of the seal by a pressure surge. Holes were drilled through the seal housing so that pressure could act on the back side of the carbon seal coincident with the pressure surge on the carbon nose. This action prevented the separation of the seal and the mating ring and eliminated the problem.

3. DESIGN CRITERIA and Recommended Practices

3.1 PRELIMINARY DESIGN

3.1.1 System Requirements

3.1.1.1 PUMP HEADRISE AND FLOWRATE

The headrise and flowrate delivered by the pump shall be adequate for the engine to produce its design thrust.

To determine the pump discharge-pressure requirement, add the engine-system pressure drops that occur downstream of the pump discharge. For gas-generator cycles, add to the chamber pressure the pressure drops due to line losses, valve losses (if any), the regenerative jacket (if applicable), and the injector. For staged-combustion cycles, include the pressure drops across the preburner injector and the turbine and the line losses between them.

Estimate the pump headrise from the expression

$$H = \frac{144\left[(P_o)_2 - (P_o)_1\right]}{\rho_1} \tag{16}$$

where

$(P_o)_2$ = pump discharge total pressure, psia

$(P_o)_1$ = pump inlet total pressure, psia

ρ_1 = pump inlet propellant density, lbm/ft^3

For a high-pressure hydrogen pump (above 2000 psi pressure rise), obtain the required isentropic enthalpy rise from the propellant properties and calculate the corresponding head rise from

$$H_{isen} = J\left[(h_{id})_2 - h_1\right] \tag{17}$$

where

H_{isen} = headrise for an isentropic compression from $(P_0)_1$ to $(P_0)_2$, ft

$(h_{id})_2$ = ideal specific enthalpy at $(P_0)_2$, Btu/lbm

h_1 = inlet specific enthalpy, Btu/lbm

J = 778 ft-lbf/Btu

If the propellant is sufficiently compressible in the application, account for the propellant heating effect by applying equation (17) at increments between $(P_o)_1$ and $(P_o)_2$; i.e., determine the actual enthalpy at the beginning of a pressure increment by adding the actual enthalpy increment (isentropic enthalpy increment divided by the pump efficiency) to the previous actual enthalpy, and then sum the isentropic headrise increments. This procedure is illustrated in figure 35. When making this incremental calculation, include the heating caused by the recirculation of the thrust-balance-system flow.

To determine the volume flowrate requirements, obtain the total weight flowrate requirement from

$$\dot{w}_T = \frac{F}{(I_s)_T} \tag{18}$$

where

$\dot{w}_T$ = engine total weight flowrate, lbm/sec

Then use the following equations to obtain the volume flowrates for the oxidizer and the fuel pumps:

$$(Q_o)_P = \frac{\dot{w}_T\,(MR)\;\;(448.8)}{\rho_o\,(1 + MR)} \tag{19}$$

$$(Q_f)_P = \frac{\dot{w}_T\,(448.8)}{\rho_f\,(1 + MR)} \tag{20}$$

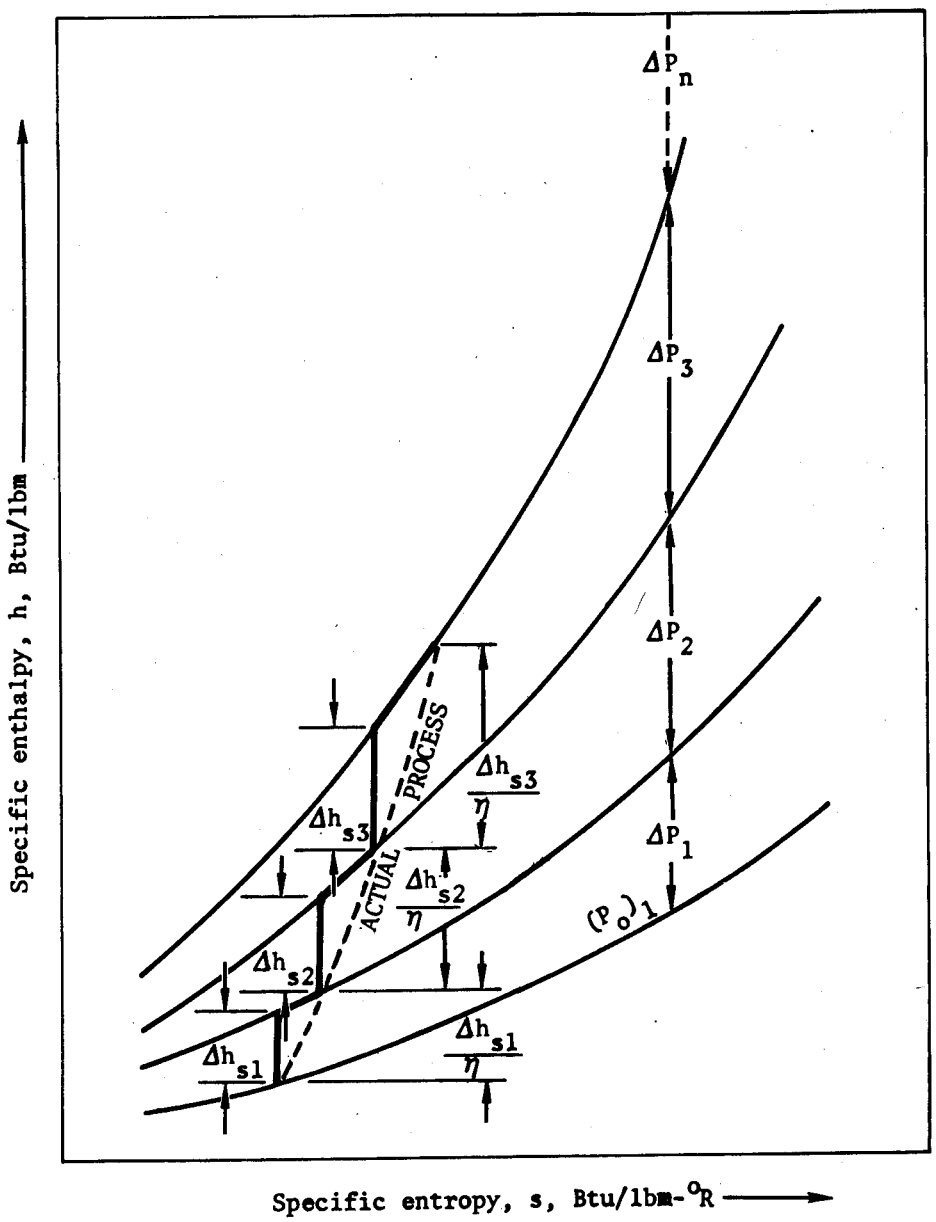

$$H_{isen} = J\,(\Delta h_{s1} + \Delta h_{s2} + \Delta h_{s3} + \ldots\ldots)$$

$$\Delta h_{act} = \frac{\Delta h_{s1}}{\eta} + \frac{\Delta h_{s2}}{\eta} + \frac{\Delta h_{s3}}{\eta} + \ldots\ldots)$$

Figure 35. — Illustration of incremental method for determining isentropic headrise.

where

$(Q_o)_p$ = oxidizer pump volume flowrate, gpm

$(Q_f)_p$ = fuel pump volume flowrate, gpm

ρ_o = oxidizer density, lbm/ft^3

ρ_f = fuel density, lbm/ft^3

MR = engine mixture ratio, $(\dot{w}_o/\dot{w}_f)_t$

448.8 = factor for converting ft^3/sec to gpm

For preliminary design estimates, use the inlet density. For more detailed flow-passage sizing, use the average or the local density.

If off-design operation is required, use the procedure described above to determine the headrises and volume flowrates over the entire engine operating range (sec. 2.3.1.2).

3.1.1.2 NET POSITIVE SUCTION HEAD

The pump net positive suction head shall be suitable for the particular application, shall be adequate for stable and predictable pump performance, and shall minimize vehicle overall weight.

Determine the methods for obtaining stable and predictable pump performance by consulting sections 2.2.1.1, 2.2.2.1, and reference 1. Then, if the engine contractor participates in the NPSH selection, conduct an optimization that considers the effects of pump inlet pressure and NPSH on vehicle tank and pressurization system weight, pump efficiency, turbopump weight, and system cost. The effects of NPSH on some of these factors are illustrated graphically in figure 36. Sections 2.1.1.6 and 2.2.1.1 discuss the effects of pump geometry on efficiency and suction performance. Convert the pump efficiency to turbopump equivalent weight (sec. 2.1.2.2). Then add the weights and select the optimum NPSH. If NPSH is specified to the engine manufacturers, then optimize the weight and performance at that NPSH.

3.1.1.3 PROPELLANT PROPERTIES

The turbopump system design shall reflect the impact of the properties of the individual propellants and of the propellant combination.

Because propellant properties have a major influence on all aspects of turbopump system design, use the following checklist to make sure that all fluid property effects are considered:

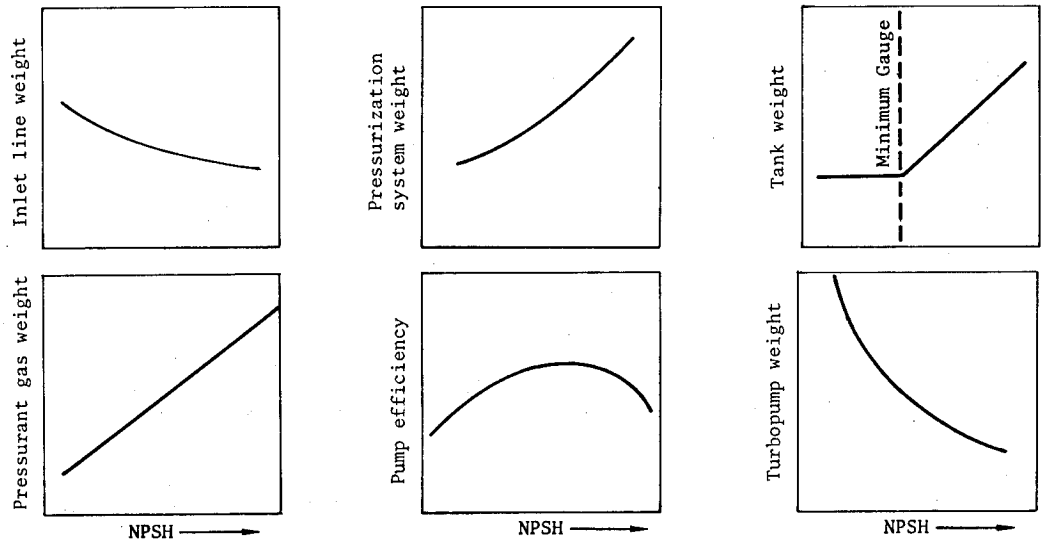

Figure 36. – Effects of variations in pump NPSH on various design factors.

(1) Density on all aspects of turbopump design, including the overall turbopump arrangement (secs. 2.1.2.3 through 2.1.2.6 and 2.2.1.1 through 2.2.1.4).

(2) Material compatibility on material selection for all wetted surfaces (refs. 1 through 10).

(3) Corrosive, cooling, lubricating, and viscosity characteristics on bearing DN and seal speed limits (secs. 2.2.1.2 and 2.2.1.3).

(4) Specific heat, specific heat ratio, and molecular weight of turbine working fluid on turbine geometry (sec. 2.1.2.6).

(5) Cavitation characteristics on inducer design (sec. 2.2.1.1).

(6) Two-phase acoustic velocities on zero-NPSH pump capability (sec. 2.2.1.1).

(7) Propellant saturation temperature on material selection, turbopump housing and rotor alignment (sec. 2.2.4.3), and thermal conditioning (secs. 2.1.1.8 and 2.2.4.6).

3.1.1.4 TURBINE DRIVE CYCLE

The turbopump system shall be compatible with the turbine drive cycle.

For cycles in which the turbine is in parallel with the thrust chamber (GG and tapoff cycles), minimize the required turbine flowrate by using high turbine pressure ratios ($\approx$ 15 to 25). Note that this practice requires some compromise with rotational speed, weight, efficiency, and turbine inlet temperature (sec. 2.2.3.1). Allow sufficient turbine discharge pressure for exhaust disposal (sec. 2.2.3.2).

For cycles in which the turbine is in series with the thrust chamber (expander and topping cycles), maximize turbine flowrate, efficiency, and inlet temperature so as to minimize pressure ratio and engine weight. Using maximum values for $\dot{w}$, η, and $(T_0)_1$, calculate the pressure ratio from the expression (all parameters referred to turbine)

$$PR = \left[\frac{1}{1 - \left(\frac{550\,(HP)}{\dot{w}\,\eta\,J\,C_p (T_o)_1} \right)} \right]^{\frac{\gamma}{\gamma - 1}} \tag{21}$$

where

PR = turbine pressure ratio, $(P_0)_1/(P_0)_2$

$(P_0)_1$ = turbine inlet total pressure, psia

$(P_0)_2$ = turbine discharge pressure, psia

HP = turbine horsepower

η = turbine efficiency

$\dot{w}$ = turbine weight flowrate

C_p = specific heat of turbine working fluid, Btu/lbm-°R

$(T_0)_1$ = turbine inlet total temperature, °R

γ = specific heat ratio of turbine working fluid

550 = factor for converting hp to ft-lbf/sec

Add sufficient margin to this value to allow for the fact that the pump and turbine efficiencies may not meet the initial predicted values.

3.1.1.5 THROTTLING RANGE

The turbopump operation shall be stable over the entire operating range.

Generate the pump head-versus-flowrate characteristic required by the engine during its maximum throttling excursion. Plot this engine requirement on the performance map for each pump candidate, as shown in figure 7. If the pump stability limit crosses the requirement line during the engine excursion, do not use that pump design, because it will not meet the throttling requirement. In general, use centrifugal pumps if the engine is to throttle to less than 50 percent of design.

3.1.1.6 EFFICIENCY

The turbopump efficiency shall be adequate for the engine to meet its requirements.

For engine cycles in which the turbine is in parallel with the thrust chamber (gas generator and tapoff cycles), determine the maximum allowable turbine flowrate from the expression

$$\dot{w}_T = \frac{F}{(I_s)_E} \left[\frac{(I_s)_{T/C} - (I_s)_E}{(I_s)_{T/C} - (I_s)_{T2}} \right] \tag{22}$$

where

$(I_s)_{T/C}$ = thrust chamber specific impulse, lbf-sec/lbm

Then obtain the minimum allowable turbopump efficiencies from

$$\dot{w}_T = (\dot{w}_o)_T + (\dot{w}_f)_T = \left[\frac{\dot{w}_P \; H_P}{\eta_P \, \eta_T \, J \, C_p (T_o)_{T1} \left[1 - \left(\frac{1}{PR}\right)^{\frac{\gamma - 1}{\gamma}}\right]}\right]_o + \left[\frac{\dot{w}_P \; H_P}{\eta_P \, \eta_T \, J \, C_p (T_o)_{T1} \left[1 - \left(\frac{1}{PR}\right)^{\frac{\gamma - 1}{\gamma}}\right]}\right]_f \tag{23}$$

where

$\dot{w}_T$ = total turbine weight flowrate, lbm/sec

$(\dot{w}_f)_T$ = fuel-turbine weight flowrate, lbm/sec

$(\dot{w}_o)_T$ = oxidizer-turbine weight flowrate, lbm/sec

$\dot{w}_P$ = pump weight flowrate, lbm/sec

H_P = pump headrise, ft

η_P = pump efficiency

η_T = turbine efficiency

$(T_o)_{T1}$ = turbine inlet total temperature, °R

For engine cycles in which the turbine is in series with the thrust chamber (expander and staged-combustion cycles), obtain the effect of turbopump efficiency on engine pressure requirements (fig. 14 is an example for a typical engine) from an engine-system analysis that includes a mathematical steady-state representation of all of the engine components. Determine the constant-efficiency curve whose peak chamber pressure equals the design chamber pressure. Add sufficient margin for overestimates of turbopump efficiency and underestimates of system pressure drop. The result is the minimum allowable turbopump efficiency.

3.1.1.7 WEIGHT AND SIZE

The weight and size of the turbopump system shall be minimal consistent with other requirements.

Maximize the turbopump-system design rotational speeds within the limitations of life, reliability, NPSH, and performance. In so doing, consider inducer cavitation, bearing DN, seal rubbing speed, turbine-blade centrifugal stress, and, for geared turbopumps, gear pitchline velocity (sec. 2.2.1).

Unless maximum turbopump-system efficiency is critical, do not use more than two turbine rotors.

3.1.1.8 CONDITIONING

For restart applications with cryogenic propellants, the turbopump system shall require a minimum conditioning time and a minimum amount of conditioning propellant.

Minimize the pump temperature rise during a shutdown period by thermally isolating the pump from the turbine: minimize the contact area, use insulation at the contact points, and minimize the turbine mass relative to the pump mass (sec. 2.2.4.6). Evaluate geared and single-shaft turbopumps (fig. 17).

Evaluate coating the wetted surfaces of the pump with a thin layer of low-conductivity material that will take a rapid chill and also reduce the rate of heat rejection to the main body of metal.

Increase the two-phase pumping capability of the inducers and evaluate the use of boost pumps, if necessary (sec. 2.2.1.1).

3.1.1.9 LIFE, RELIABILITY, AND COST

The turbopump system shall meet the life and reliability requirements of the mission at minimum overall cost.

For the total number of turbopump units to be built and the intended production rate, determine the effect of design variations on performance, weight, and cost. To meet the turbopump-system life and reliability requirements at a minimum overall cost, consider low-speed designs, single-shaft arrangements that eliminate gears, and the use of low values of inducer fluid incidence angle to reduce cavitation erosion. In the cost analysis, evaluate research and development costs to meet the life and reliability requirements and, in addition, the assembly, manufacturing, handling and maintenance costs. Conduct a system

analysis to convert the performance and weight variations into payload variations. Then determine the cost per pound of payload variations by dividing the cost sums by the corresponding payloads. Select the configuration that has the minimum cost per pound of payload.

3.1.2 Selection of System Type

3.1.2.1 NUMBER OF UNITS

The number of turbopump units per engine shall reflect the impact of turbopump size and number of units produced on total costs.

Conduct a cost analysis that considers the effects of size on the sum of R&D costs and production costs. Use a production learning curve to obtain average production costs for various numbers of production units. Then obtain total production costs for constant engine flowrate by multiplying the average unit costs by the number of units required to deliver the total flowrate.

3.1.2.2 TURBOPUMP EQUIVALENT-WEIGHT FACTOR

The turbopump system design shall reflect evaluation of the equivalence of turbine flowrate and turbopump weight to stage payload weight.

For engines in which the specific impulse of the turbine exhaust is less than that of the engine (GG and tapoff cycles, sec. 2.1.1.4), use equation (2) to determine the turbopump equivalent weight factor EWF. The factor $\partial PL/\partial(I_s)_F$ in equation (2) is obtained from mission and vehicle analysis; note that PL refers to stage rather than vehicle payload. Then calculate the net effect on payload from equation (3). Use the parameters EWF and EW to evaluate turbopump modifications.

For engines in which the specific impulse of the turbine exhaust is equal to that of the engine (expander and staged-combustion cycles), the turbopump equivalent weight factor is essentially zero, and therefore the turbopump equivalent weight is equal to the turbopump weight (eq. (3)).

3.1.2.3 ROTATIONAL SPEED

The design rotational speed shall reflect evaluation of the component hydrodynamic performances, the turbopump weight, and the mechanical limitations.

For a given pump and turbine type (specified values of stage number, pump inlet flow coefficient, turbine pitchline velocity, etc.), determine the effect of rotational speed on pump efficiency, turbopump weight, and turbine flowrate. Use equations (2) and (3) to determine the net effect of speed on payload. By means of a plot like that shown in figure 16, determine the effect of rotational speed on configuration. Select design speed by weighing these results against the other system requirements. Unless throttling range or turbopump size (secs. 2.1.1.5 and 2.1.1.7) is unusually critical, the design rotational speed should never exceed the value at optimum payload.

If the investigation of the given configuration shows that other turbopump configurations have potential, conduct a similar analysis for each configuration and compare the results.

3.1.2.4 TURBOPUMP ARRANGEMENT

The turbopump arrangement shall allow operation of the individual pumps and turbines at the speeds needed to produce the best overall system performance within the limitations of reliability and life.

Use table VII as a guide for screening candidate turbopump arrangements based on engine size, propellant type, and turbine drive cycle. For large engines in which both propellants are dense, also consider the arrangement in figure 17(d) if the turbopump must be restarted; in this arrangement, the turbine would reject heat to both pumps, thereby reducing preconditioning. In some cases, envelope restrictions make arrangement 17(b) (pancake geared) a prime candidate, particularly for a small engine with restarts. For the applications with multiple candidates, predict the performances and weights, and use equations (2) and (3) to determine the net effects on payload. Select the turbopump arrangement by weighing these results against the other system requirements.

3.1.2.5 PUMP CONFIGURATION

The pump configuration shall deliver the required headrise and flowrate while maintaining the best compromise among the other system requirements.

For engines with thrust greater than 5000 lbf, use single-stage centrifugal pumps for propellants other than hydrogen. Consider double-entry pumps for applications in which a single-entry pump would fall to the right of the peak-efficiency specific speed in figure 15.

Table VII. – Guide for Screening Candidate Turbopump Arrangements

Engine Features			Recommended arrangement (fig. 17)
Size	Propellant type	Turbine drive cycle	
Large (F > 25 000 lbf)	H_2 fuel Dense oxidizer	Staged combustion & expander	g
		GG & tapoff	c,g
	Dense fuel Dense oxidizer	Staged combustion & expander	a,g
		GG & tapoff	a,c,g
Small (F < 25 000 lbf)	H_2 fuel Dense oxidizer	Staged combustion & expander	f,g
		GG & tapoff	c,g,f
	Dense fuel Dense oxidizer	Staged combustion & expander	a,e,g
		GG & tapoff	a,c,e,g

Use shrouded impellers for liquid oxygen. For hydrogen, conduct an analysis similar to that shown in figure 19, and select the pump type and number of stages by weighing the results against the other system requirements. In general, use centrifugal pumps for hydrogen if the throttling ratio Q_{des}/Q_{min} is greater than 2. If the throttling ratio is very large, increase the number of centrifugal stages (figs. 13 and 19). If the ratio is less than 2, the axial pump also may be considered, particularly for missions with long operating durations where high efficiency is very important. Do not exceed approximate tip speed limits of 2800 ft/sec for unshrouded titanium centrifugal impellers, 2000 (1700 to 2300 depending on design specific speed, amount of sweepback, blade height, method of shroud attachment, etc.) ft/sec for shrouded titanium centrifugal impellers, and 1500 ft/sec for titanium axial rotors. For unshrouded centrifugal impellers, evalute the effects of tip clearance on efficiency (ref. 21) and the effects of housing weight required to maintain thus clearance.

Use the suction-performance relationships in section 2.2.1.1 to size the pump inlet to meet the NPSH requirements. Note that decreasing the inlet flow coefficient will not only decrease the NPSH requirement but will also decrease the pump efficiency (figs. 15 and 19).

For small engines (F < 5000 lbf), initially analyze centrifugal pumps. If stage specific speeds are less than 400 (figs. 15 and 18) or if impeller tip diameters are less than 1.5 in., analyze and compare other pump types such as partial-emission centrifugal, Barske, and Rootes (figs. 18 and 20).

3.1.2.6 TURBINE CONFIGURATION

The turbine configuration shall deliver the required horsepower while achieving the best compromise among the other system requirements.

Use axial turbines with, in general, no more than two rotors (i.e., two-stage pressure-compounded and two-row (one-stage) velocity-compounded).

Use high pitchline velocities but do not exceed 1800 ft/sec; do not use blade heights less than 0.15 in.; and do not let the turbine rotor diameters exceed approximately 3 times the pump impeller diameters.

Calculate the ratio of the pitchline velocity to the isentropic spouting velocity from the expression

$$U/C_o = U \Big/ \sqrt{2gJC_P(T_o)_{T1}\left[1-\left(\frac{1}{PR}\right)^{\frac{\gamma-1}{\gamma}}\right]} \tag{24}$$

From design-point efficiency curves similar to those in figure 21, use this velocity ratio to select the turbine type that will give the highest efficiency without causing axial thrust problems. Figure 23 may be used as a guide. Consult reference 4 for additional guidance.

If efficiency is unusually critical, consider using more than two rotors. Note, however, that large turbines require outboard bearings that, in turn, require additional supporting structure, an extra seal, and extra provisions for lubrication and cooling. Figure 23 may be used as a guide in selecting the type.

Conduct tradeoffs between turbine flowrate requirements and weight to determine the optimum rotor diameter and, for turbopumps in which the speed is limited by turbine-blade-root centrifugal stress, to determine the optimum combination of rotor diameter, speed, pressure ratio, and inlet temperature (secs. 2.2.1.4 and 2.2.3.1).

For small turbines in which the pitch diameter and, consequently, the pitchline velocity and the U/C_o must be reduced to keep a direct-driven, full-admission turbine within the minimum blade-height limit, consider using partial-admission turbines and geared turbines (figs. 17(e) and 17(f)).

In staged-combustion cycles, consider reversing the turbine so that hot gas from the precombustor can flow in through an annular axial inlet and, with the aid of a 180-degree annular elbow downstream of the turbine, the turbine discharge gas can flow back to the main combustion chamber through an annular axial discharge.

3.2 DETAIL DESIGN AND INTEGRATION

3.2.1 Limits to Rotational Speed

The turbopump rotational speed shall provide for achieving good performance and low weight without exceeding the mechanical or hydrodynamic limits of any component in the turbopump assembly.

Plot curves of turbopump weight and pump efficiency vs rotational speed; indicate the various speed limits and the configurational changes required to proceed beyond each limit. Figure 16 is an example of this type of plot. Use the information on the curves in conjunction with data relating turbopump weight and performance to vehicle payload (sec. 2.1.2.2) as a basis for selecting pump speed. For example, assuming adequate development funding and high vehicle-performance requirements, 39 000 rpm is a reasonable selection for the LOX turbopump optimization shown on figure 16; higher speeds would reduce pump efficiency, would require more complex bearings and seals, and would not reduce weight enough to compensate for the other two factors. If the rotational speed significantly affects turbine efficiency, include a turbine efficiency curve on the plot.

3.2.1.1 INDUCER CAVITATION

The inducer shall remain free from cavitation that impairs the overall pump performance during the operational speed and acceleration profiles.

Do not exceed the inducer suction specific speed limits shown in figure 24 at any time during the mission. For applications where operation NPSH's near zero are desired, TSH effects should be considered. Do not exceed the NPSH limits expressed by equations (7) and (8) (in combination with fig. 27) at any time during turbopump operation. If the pump inlet NPSH is not specified by the system, conduct a payload optimization that considers turbopump weight, pump efficiency, and tank weight. If long life (> 1 hr) is required, a downward adjustment of the curves in figure 24 may be necessary. Reference 1 provides more detailed information on inducer cavitation limits.

To remove the inducer cavitation limit on rotational speed, place either a boost pump or a preinducer upstream of the main pump inlet. Use table VIII as a guide in a system optimization and analysis to select the drive system for the boost pump or the preinducer.

To pump propellants that are saturated in the tank (zero tank NPSH), first determine the inducer blade plus blade boundary-layer blockage (normally 20 to 40 percent) and then obtain the vapor-pumping capacity from either figure 29 or from equation (9). For a narrow

Table VIII. – Comparison of Typical Drive Systems for Boost Pumps and Preinducers

Drive system type	Advantages	Disadvantages
Gear (fig. 28(a))	Positive speed control Most efficient	Complex Close coupled to main pump
Through-flow hydraulic turbine (fig. 28(b))	Simple Efficient Relatively few rotating-shaft seals provide increased reliability	Lags main pump start Close coupled to main pump Limited headrise
Recirculated-flow hydraulic turbine (fig. 28(c))	Allows remote location In some applications, more efficient than gas turbine Relatively few rotating-shaft seals provide increased reliability	Lags main pump start Relatively low efficiency Recirculated propellant may vaporize at turbine discharge
Gas turbine	Allows remote location Allows pre-start In general, more efficient than recirculated-flow hydraulic turbine	Complex Requires separate gas source
Electric motor (fig. 28(d))	Allows remote location Allows pre-start Efficient With a propellant-cooled motor, relatively few rotating-shaft seals provide increased reliability	Heavy electric motor Requires electrical energy source Limited headrise

range of zero-NPSH operation, use a value for $(i'\beta)_l$ of approximately 0.6 and never exceed an $(i'\beta)_l$ of 0.7; for a wider range, use an $(i'\beta)_l$ of 0.3 to 0.4. Then use the corresponding vapor fraction and the minimum zero-NPSH tank-saturation pressure to determine the minimum allowable inducer inlet annulus area. For zero inlet-line losses, figure 37 displays these relations for hydrogen and oxygen. For more detailed information on two-phase pumping, consult references 17, 23, 24, and 25.

3.2.1.2 BEARING DN

The bearings shall operate at DN levels that will permit them to meet the life requirements.

Do not exceed the bearing DN limits in reference 6 at any time during the operating life. If required life including preliminary testing, calibration, and flight operation exceeds 1 hour, a downward adjustment of the limits may be necessary.

If the turbine is overhung (fig. 30(a)), size the shaft on critical-speed basis (ref. 8). Equation (10) may be used to approximate the speed limit for this type of arrangement. To permit higher design speeds, place the turbine bearing outboard (fig. 30(b)). Equation (11) may be used to estimate this rotational speed limit. To permit even higher speeds, the pump bearing may be placed between the inducer and the impeller (fig. 30(c)), or a hydrostatic bearing (refs. 26 and 27) may be considered.

3.2.1.3 SEAL RUBBING SPEED

The seals shall operate at rubbing velocities that will permit them to meet the life requirements.

Do not exceed the seal speed limits given in reference 7 at any time during the operating life. If required life exceeds 1 hour, a downward adjustment of the limits may be necessary. Consider the use of static liftoff seals, which will eliminate dynamic rubbing seals.

If the turbine is overhung, equation (12) may be used to estimate the speed limit. Reference 8 provides detailed information on shaft sizing. If outboard bearings (figs. 30(b) and 30(c)) are used, equation (13) may be used to estimate the limit. To permit operation at even higher speed, advanced configurations such as liftoff, hydrodynamic, and hydrostatic seals are necessary (refs. 7, 26, and 28).

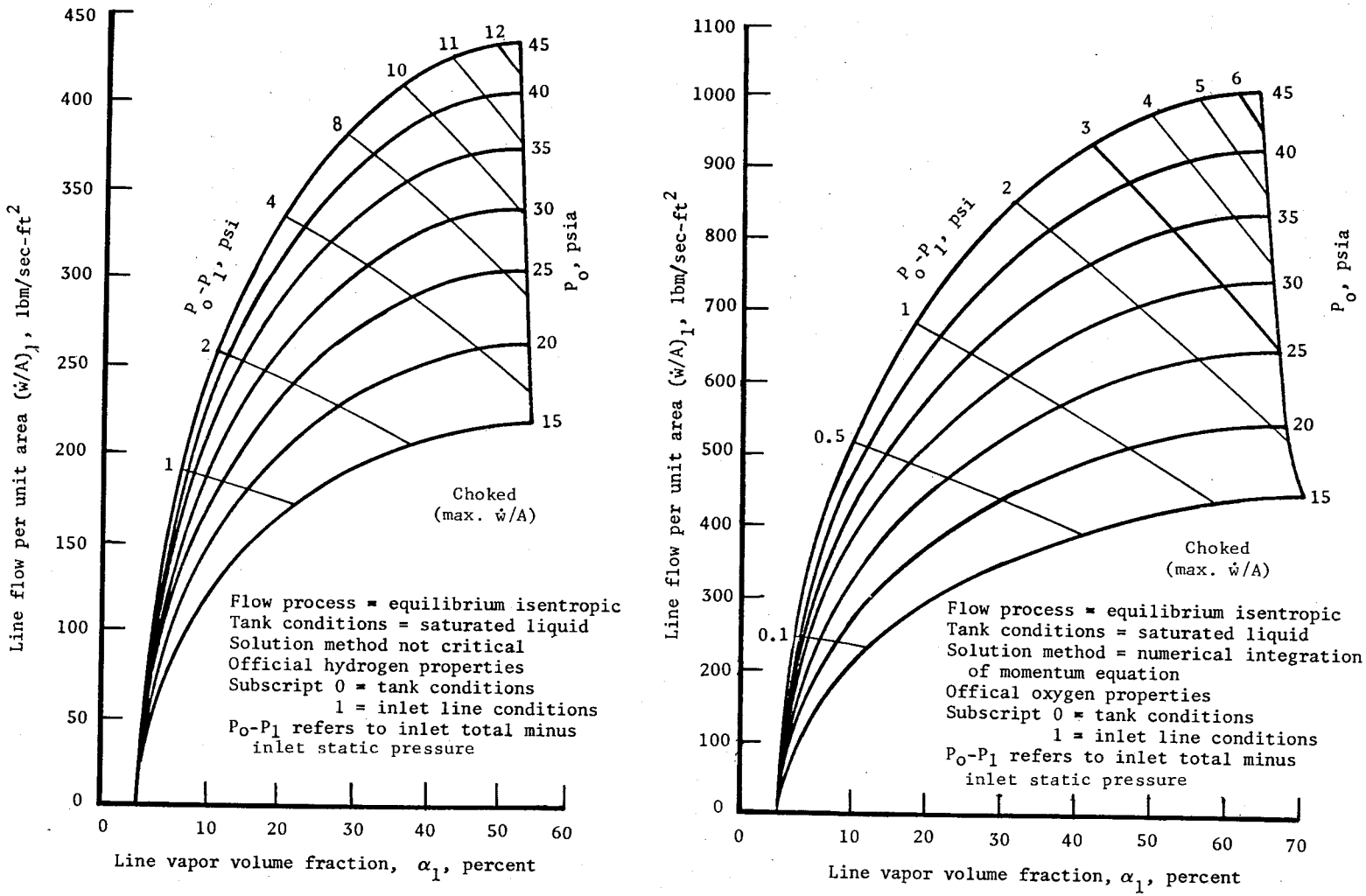

(a) Hydrogen

(b) Oxygen

Figure 37. — Zero-NPSH pumping capability requirements for hydrogen and for oxygen.

3.2.1.4 TURBINE-BLADE CENTRIFUGAL STRESS

The turbine blades shall operate at centrifugal stresses that are below the levels at which failure will occur.

Do not exceed the turbine $N^2 A_a$ limits given in reference 4 at any time during the operating life. If long life is required, a downward adjustment of the limit may be necessary.

To optimize the turbopump at the turbine-blade centrifugal-stress limit, conduct tradeoffs that consider turbine inlet temperature, turbine inlet pressure, turbine pressure ratio, turbine type, turbine blade materials, turbopump weight, turbopump rotational speed, and pump efficiency. Figure 38 presents flow charts of the analytical procedures for determining turbopump speed and weight at the blade stress limits for four basic types of drive cycles. An iteration for pump efficiency is indicated because pump efficiency is a function of rotational speed. A pressure-ratio optimization, which is the result of applying the logic in figure 38(a) over a range of pressure ratios, is partially illustrated in figure 31. If multi-rotor turbines are used, check the centrifugal stress on the upstream rotors, because the higher temperature in these rotors can cause the allowable $N^2 A_a$ to drop enough to more than compensate for the smaller annulus area. Turbine blade cooling can be utilized to relieve this limit somewhat. However, before using turbine cooling, consider the thermal stresses caused by hot gas on the outside and cold cryogenic propellant on the inside; for repeated rapid starts, these stresses can cause cracking due to thermal fatigue. If repeated starts cause thermal fatigue even without cooling, consider hollow blades with hot gas ducted to the hollow center. Hollow tapered blades can be used to increase the allowable $N^2 A_a$ limit without affecting the outer contour of the blade and, therefore, without penalizing turbine performance.

3.2.1.5 GEAR PITCHLINE VELOCITY

The gears shall operate at pitchline velocities and tooth stresses that are below the levels at which failure will occur.

In designing a geared turbopump, observe the recommendations on gear pitchline velocity, tooth bending stress, and tooth compressive stress given in reference 5.

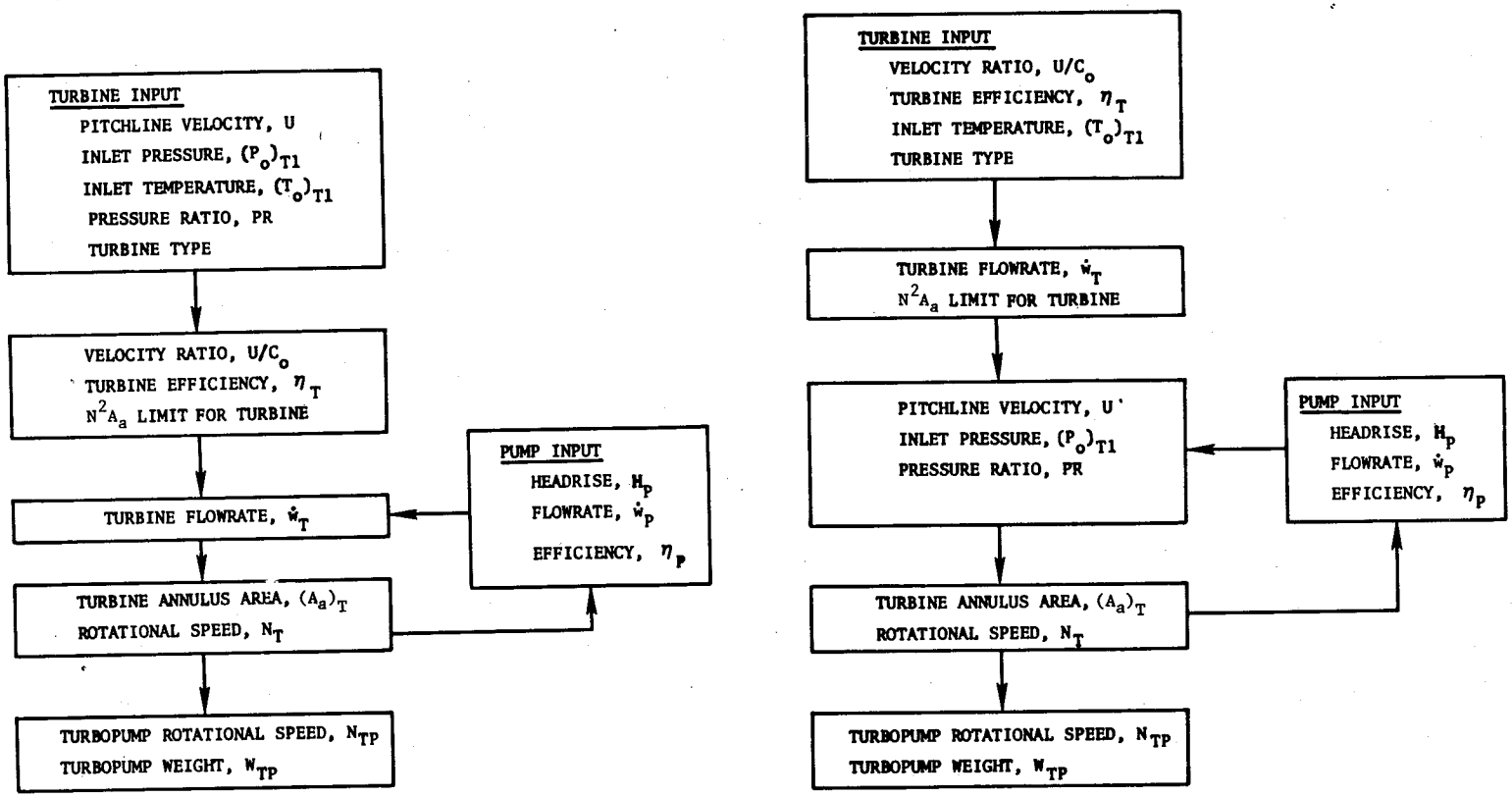

(a) Gas-generator and tapoff cycles

(b) Staged-combustion and expander cycles

Figure 38. — Flow charts for determining turbopump speed and weight at the turbine-blade centrifugal-stress limit.

3.2.2 Pump Design

3.2.2.1 INDUCER INLET FLOW COEFFICIENT

The inducer inlet flow coefficient shall provide for good suction performance and good pump efficiency.

Do not design at inlet tip flow coefficients much below 0.07. To determine the impact of inlet flow coefficient, generate curves at the design point that are similar to those in figure 19. Reference 1 provides more detailed information on inducer suction performance.

3.2.2.2 STABILITY

The pump shall be stable and shall have predictable performance over the entire operating range.

For axial pump rotors and stators, do not exceed a blade diffusion factor D_B of 0.70 at the mean blade diameter (or station) at any point within the design operating range:

$$D_{B,ms} = 1 - \frac{w_2}{w_1} + \frac{w_{1u} - w_{2u}}{2\sigma\, w_1} \tag{25}$$

where

$D_{B,ms}$ = blade diffusion factor at blade mean station

w_1 = inlet fluid velocity relative to the blade

w_2 = discharge fluid velocity relative to the blade

w_{1u} = tangential component of inlet relative velocity

w_{2u} = tangential component of discharge relative velocity

σ = blade solidity (ratio of chord length to spacing)

For centrifugal pumps, design such that the entire operating range falls to the right of the zero-slope points on the performance-map speed lines or, in other words, such that the pump always operates in the negative slope region of the pump speed line (figs. 12 and 13). For more detailed information on centrifugal pump stability and axial pump stall, consult references 2 and 3.

3.2.2.3 TIP SPEED

The pump impellers shall maintain mechanical integrity over the entire operating range of rotational speed.

Design pump impellers with an adequate margin between the maximum operating tip speed and the tip speed at which burst occurs; reference 2 may be used as a guide for centrifugal pump impellers. For forged titanium, which is the material with the highest tip-speed capability, the approximate tip speed limits are 2800 ft/sec for unshrouded centrifugal pump impellers, 2000 ft/sec for shrouded centrifugal pump impellers (1700 to 2300 ft/sec depending on design specific speed, amount of sweepback, blade height, method of shroud attachment, hole in the center, etc.) and 1500 ft/sec for inducers and axial pump rotors. Note that the tip-speed limit decreases with degree of blade sweepback for centrifugal impellers and that hydrogen pumps are the only pumps that approach these limits. Consult references 1, 2, and 3 for more detailed information on tip speed limits.

3.2.3 Turbine Design

3.2.3.1 PERFORMANCE OPTIMIZATION

The turbine shall provide for low weight and high efficiency within the limitations necessary to maintain mechanical integrity.

For a tip-speed-limited turbine design (i.e., a design limited by rotor stress), determine the effect of inlet temperature on allowable pitchline velocity. Consider the effect of inlet temperature on various design factors and conduct an optimization as indicated in figure 39(a). If the turbine diameter becomes disproportionately large (greater than 3 times the pump impeller diameter) or the moment of inertia becomes too large for rapid starts, it may be necessary to back off from the tip-speed limit. This condition often occurs with the oxidizer turbopump in a hydrogen-fueled application.

For designs limited by turbine-blade centrifugal stress, determine the effect of inlet temperature and pressure ratio on the allowable rotational speed (sec. 2.2.1.4). Consider the effects of inlet temperature on various design factors and conduct an optimization as indicated in figure 39(b). Note that the blade stress limit generally is encountered only in hydrogen turbopumps.

To determine the number of stages, use equivalent weight (sec. 2.1.2.2) to determine the optimum tradeoff weight and performance. Unless the payoff is highly significant to the engine, do not use so many stages that an outboard turbine bearing is necessary. Consult reference 4 for more detailed information on turbine rotor stress limitations.

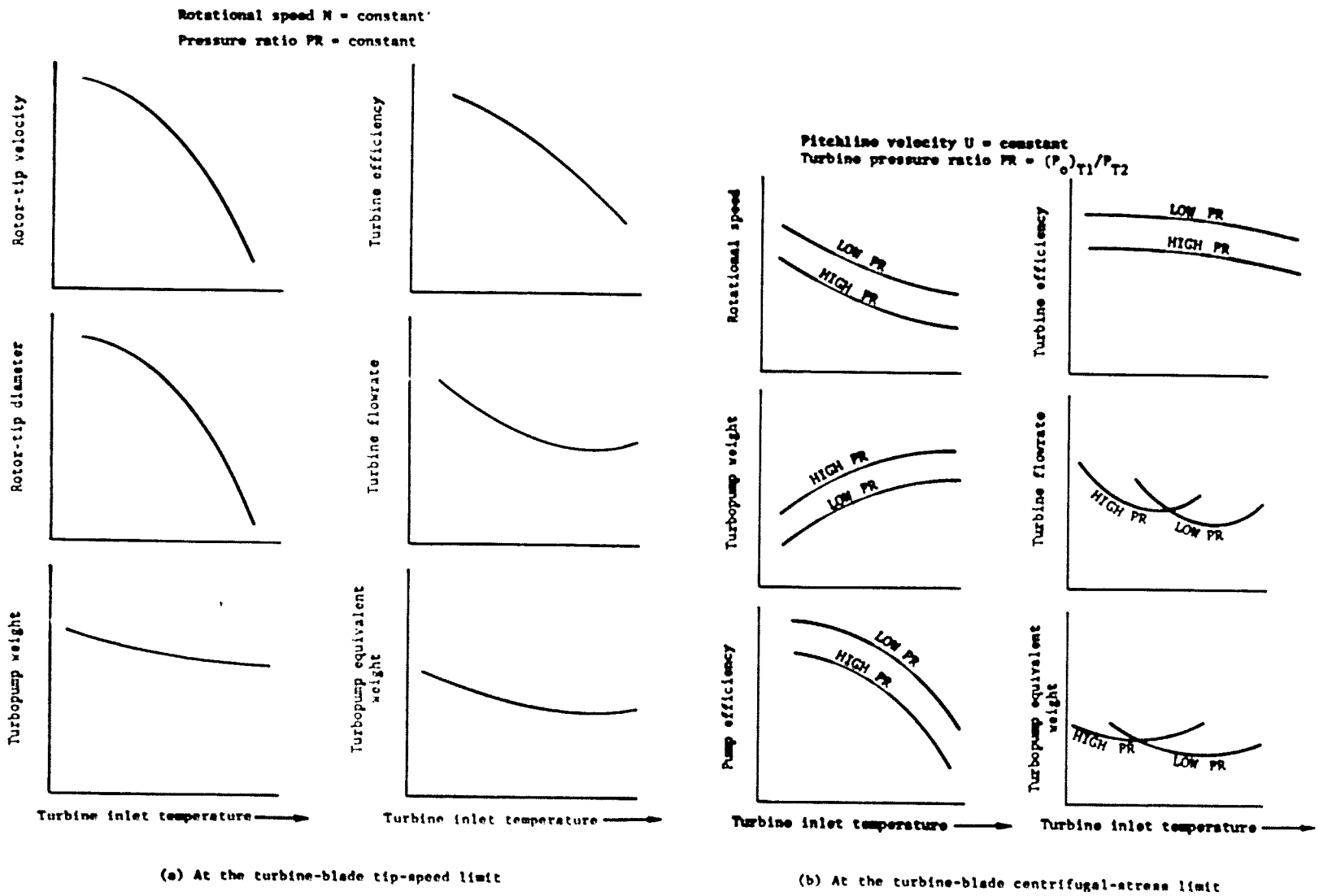

Figure 39. – Effect of turbine inlet temperature on various design factors in turbine optimization (gas-generator cycle).

3.2.3.2 EXHAUST PRESSURE

The turbine shall exhaust at a pressure level sufficient for predictable engine performance and sufficient for the engine to meet its design thrust.

To avoid unpredictable engine performance or exhaust flareback in GG and tapoff engine cycles, design for a turbine discharge static pressure great enough to permit the gas flow to choke between the turbine discharge and the end of the exhaust duct. To meet design engine thrust for staged-combustion and expander engine cycles, design for sufficient turbine discharge pressure to permit the flow to pass through the downstream plumbing and the injector into the thrust chamber.

3.2.4 Turbopump Mechanical Integration

The turbopump mechanical design shall reflect evaluation of component interaction.

When solving a particular mechanical-design problem, also consider the effects of that particular solution on all other components in the turbopump system.

3.2.4.1 BEARING PLACEMENT

The bearing location shall provide the maximum support for the rotor in the simplest manner without exceeding individual bearing limits.

For a single-shaft turbopump design with no more than two turbine rotors, place the aft bearing inboard of the turbine if the resulting bearing DN is within limits. If the resulting bearing DN is not within limits or the turbine has more than two rotors, place the aft bearing outboard of the turbine. To simplify future development effort, consider individual component development (pump alone and turbine alone prior to combining them) when arranging the turbine relative to the pump.

For a single-stage pump, place the forward bearing inboard of the pump impeller. If the pump has two or more stages, place the forward bearing between stages. If the pump has a separate inducer stage, place the forward bearing between the inducer and the rest of the pump and use the inducer stators to support the bearing housing. If both the turbine and the pump have more than three rotors, consider designing each as a separate unit with its own sets of bearings and seals. For engines with thrust less than 10 000 lbf, consider the geared turbopump arrangement.

3.2.4.2 TURBINE ROTOR ASSEMBLY AND ATTACHMENT

The turbine rotor assembly and its attachment to the main shaft shall adapt to the effects of centrifugal stress and thermal growth on deflections, normality, concentricity, alignment, and clearances; shall transmit the torque reliably; shall be simple; and shall be easy to assemble and disassemble.

To minimize problems resulting from thermal growth, consider the following when designing the turbine rotor assembly:

(1) Concentric pilots may not be dependable if different materials are used for the various components, or if thermal growth and centrifugal force act together on the pilots.

(2) Disk mounting (or clamp) bolts may loosen if they have a thermal expansion coefficient that is much different from that of the disks.

(3) Even at steady-state conditions, the disks may operate at different temperatures. If so, the disk clamping bolts must adapt to the resulting differences in radial growth.

(4) Disks will deflect axially if the temperature on one side is different from that on the other.

If the rotor tip speeds are approaching the stress limits, minimize centrifugal stresses by designing without a center hole. To permit the two sides of such disks to be symmetrical, use a drive coupling such as a curvic coupling to attach the disks to the shaft and to each other. For curvic couplings, place the clamping bolts at the coupling mean diameter in order to avoid disk deflection. In general, use a disk diameter that is less than 4 times the coupling diameter; if a greater diameter ratio is desired, conduct a rotor dynamics analysis to ensure disk stability and a reasonable unit loading for the coupling (ref. 8). If the stresses are within the material limits, the torque may be transmitted by torque pins (a minimum of three), the clamping bolts, or a spline (with radial pilots) on the extended hub of the disk. To attach the disks to the main shaft, use clamping bolts if the disks do not have a hole in their centers. If they have a center hole, mount the disks on a shaft and secure them with either clamping bolts or a center clamping nut on the shaft.

To attach the turbine rotor to the main drive shaft of a single-shaft turbopump, use a curvic coupling in combination with an involute spline alone, a curvic coupling alone, or a bolt and torque-pin joint. The main considerations are normality and concentricity. For a geared turbine, consider gear separation and allowances for misalignment. If these requirements cause problems, consider using a quill shaft arrangement (fig. 4). If the turbine and the pump are separate units, use a coupling that is adaptable to misalignment and axial deviation.

If the turbine rotor consists of individual disks, use an idiot pin or asymmetrical bolt holes to prevent backward mounting. To facilitate handling and positioning, install the disks vertically (vertical turbopump shaft). If the aft bearing is outboard, consider stackup tolerances, concentricity tolerances, runouts, and thermal deflections during assembly.

If the pump has a thrust balance piston, position the turbine rotor axially relative to the main drive shaft to avoid rubbing of the rotors and stators.

Consult reference 8 for detailed information on design of shafts and couplings.

3.2.4.3 TURBOPUMP HOUSING

The turbopump housing shall adapt to the temperature differences between the pump and the turbine while maintaining proper alignment between the various components and avoiding structural failure.

To permit a single-shaft turbopump to adapt to the large temperature difference between the cold pump and the hot turbine, either use a long cylinder for the turbopump housing or use an arrangement of radial pins on which the hot turbine casing can slide unrestrained without losing its concentric relation to the pump. If the cylindrical housing is used, the temperature somewhere along the cylinder should remain ambient and, therefore, the diameter at that point will remain constant. This is the point at which the cylinder should be flanged and bolted onto the pump casing. Use a structural cone to attach the hot turbine manifold to a cylindrical housing. The radial pin method is less applicable to large turbopumps than to small because large turbopumps are more subject to unsymmetrical thermal growth and have a larger torque for the radial pins to withstand.

If the turbine is a separate unit with bearings on both sides of the rotor, design the casing to avoid contact with the hot gas by using a discharge manifold or by shielding the support struts of the discharge bearing by passing them through hollow vanes; use insulation wherever possible. This design maintains a constant relative position between the two bearing supports and ensures alignment between the nozzles and the rotor blades. If thermal deflection is staill excessive, use a self-centering linkage arrangement to connect the casing to the bearing carrier.

To avoid cracking of the housing, minimize material cross sections in high-temperature regions. To avoid sealing problems as well as cracking, do not use flanges in high-temperature regions.

3.2.4.4 BEARINGS AND SEALS

The bearings, seals, and bearing lubrication system shall meet the turbopump life requirements, shall satisfy the axial and radial load requirements of the rotor, and shall minimize rotor dynamic problems.

Provide lubrication to all bearings; lubrication is more difficult if the aft bearing is outboard. If the pumping fluid is hypergolic or if the turbine is a separate unit, supply the bearing lubricant from a separate source.

To avoid early bearing failure, prevent sliding by installing the bearing races on the shafts with a slight interference fit. If axial or radial loads are severe, consider a split-race bearing, so that more balls may be inserted. Use a seal material compatible with the lubricant. Obtain the pressure balance across the seal that will permit the seal to operate effectively, particularly if the seal is dynamic.

To ensure that the bearing DN is within limits, consider the effects of the various operating conditions such as temperature, kind of lubricant, and radial and axial loads. In general, use ball bearings to absorb axial loads if the turbine is a separate unit. Consult reference 6 for more information on selection of bearing type.

To prevent hot turbine gas from entering the bearing, install a seal between the bearing and the hot-gas source. In general, use a shaft-riding seal and a face-contact seal. Check to ensure that the seal rubbing velocity is within limits. These limits are a function of seal pressure drop, material, and type of lubricant. See sections 2.2.1.2 and 2.2.1.3.

In some configurations, particularly large ones, use a flexible diaphragm to attach the bearing housing to the turbine manifold. If critical speed or shaft whirl becomes a problem, try changing the bearing preload so as to change the bearing spring rate.

3.2.4.5 AXIAL THRUST BALANCE

The thrust balance system shall resist the axial thrust of the rotor without overloading the bearings.

If the axial thrust is within the load-carrying ability of ball bearings, use ball bearings alone to absorb it. If it is not, consider balance ribs on the back faces of the impellers (for centrifugal pumps), which, by causing the propellant to spin with the impeller, decrease the net axial thrust on the rotating assembly. If the axial thrust is too great for balance ribs and, again, if the pump is centrifugal, consider a labyrinth seal arrangement to form a cavity on the impeller back face in combination with a cavity vent to reduce the pressure in the cavity and, therefore, the axial thrust.

If either the variation in axial thrust between operating points or a reasonble margin for error in predicted thrust are too great to be carried by the bearings, use bearings that are free floating axially in combination with a thrust balance piston (refs. 2 and 3). To avoid balance-piston rubbing, use the bearings as limit stops or, if the bearing DN's are too high to carry the loads, use rubbing stops. For a double-ring orifice-type balance piston in hydrogen (fig. 33), the orifice rings can be used as rubbing stops. However, in oxygen, a limit stop with a lower rubbing speed that is located elsewhere in the turbopump may be necessary. Locate the limit stops close to the balance piston (axially) to minimize the influence of thermal and pressure gradients on the axial distance between the stop and the balance piston.

To minimize axial length and therefore turbopump weight and to minimize leakage losses, use balance pistons that are integral with the pump impellers or rotors. Analyze housing and impeller deflections during design because integral balance pistons are sensitive to clearance variations. Separate balance piston mounted elsewhere on the turbopump shaft may be used for cases which have deflection programs or where axial length is not a prime concern.

To obtain more predictable forces and minimize shaft flexing, use shrouded impellers on centrifugal pumps. If impellers are unshrouded, momentary differences in the flow patterns in the flow passages will generate additional unbalanced forces that must be accommodated in the design.

3.2.4.6 THERMAL BARRIERS

Thermal barriers between the pump and the turbine shall minimize the pump temperature rise during shutdown so as to make subsequent restart procedures simpler and more efficient.

For applications in which cryogenic turbopumps are restarted, isolate the hot turbine rotor from the pump rotor by connecting them with an involute spline together with a quill shaft, or with a ball spline coupling, or, if stress permits, with a coupling made out of a different material (e.g., plastic). To prevent heat flow from a hot turbine housing to a cold pump housing, isolate the housing by using the radial pin arrangement, clamping insulating material between the two housings, or using a thermal barrier such as a manifold through which cryogenic fluid may be recirculated after shutdown.

3.2.4.7 ASSEMBLY

The turbopump design features and the procedures and facilities for turbopump assembly shall be compatible.

If the turbopump is designed for long service life and overhaul capability, provide easy access to all points. To avoid mistakes during reassembly, index components and use noninterchangeable fasteners. Make provisions for extracting, without damage, parts that must be separated by force.

If extremely close clearances between the rotor and the housing must be maintained, consider using matched assemblies. Consider fabrication and maintenance when selecting the turbopump materials. For example, for parts that are likely to require weld repair, do not use materials that require annealing and reheat treatment after welding.

Assemble the turbopump in a temperature- and dust-controlled environment. A class-100 000, condition-C clean room is recommended for the assembly of all types of rocket engine turbopumps. Class 100 000 means that the room must satisfy one of two criteria: (1) no more than 100 000 particles per cubic foot if they are 0.5 micron (μ) and larger, or (2) no more than 700 particles per cubic foot if they are 5 μ and larger. Condition C means that the temperature is 72 ± 5° F.

During assembly, check seal leakage rates, rotor axial and radial clearances, and bearing drag. Use locking devices to secure all bolts, nuts, and other fasteners. To avoid damage due to broken pieces, never use lockwire within the turbopump and never use a locking device twice. After assembly, check the torque to ensure that there is no interference between the rotor and the housing and that the bearing and seal drags are within specifications.

3.2.5 System Interfaces

3.2.5.1 PUMP INLET

The pump inlet and upstream ducting shall enhance the pump suction performance.

Minimize losses by minimizing bends and changes in duct cross section. Use turning vanes in elbows that are too close to the pump (within approximately 15 to 20 pump inlet diameters upstream of the pump). Consider tangential pump inlets if there is sufficient NPSH and if the overall result is a more compact unit. Use straightening vanes at the tank discharge to minimize fluid rotation at the pump inlet and to prevent fluid vortexing in the tank. Consult reference 1 for more detailed information on flow-distortion effects and pump inlet design.

3.2.5.2 PUMP DISCHARGE

The pump discharge connections and downstream ducting shall be leak tight and shall meet the requirements of light weight, minimum pressure drop, and ease of servicing.

Use a bolted flange to connect the pump discharge to the discharge line. Seal the joint with O-rings for noncryogenic propellants and with pressure-actuated seals for cryogenic propellants. If the flanges become disproportionately large and heavy (this may occur for small line sizes), consider welding the discharge line to the pump discharge. Use a diffuser at the pump discharge to minimize losses in the downstream plumbing. Trade line pressure drop against line weight to obtain the optimum line size and, therefore, the appropriate diffuser area ratio to match pump discharge and line velocities. Consult reference 10 for more detailed information on pump discharge lines.

3.2.5.3 TURBOPUMP MOUNTING

The turbopump mounts shall support the turbopump weight and all loads applied to the turbopump during operation without causing unacceptable deflections and distortions in either the turbopump or the thrust chamber systems.

In general, use close coupled, rigid pads at one end of the turbopump and, to accommodate expansion and contraction, ball joints at the other end. For cast structures, consider one large pad with integral keys to accommodate expansion and contraction. For very small turbopumps with cast volutes, consider mounting at the pump discharge flange.

3.2.5.4 GAS-GENERATOR CONNECTION AND MOUNTING

The gas-generator connections shall be leak tight and shall adapt to a high degree of thermal expansion and contraction.

Since the gas connection to the turbine manifold also supports the gas generator, design the turbine manifold and select its material to withstand the added loads, including those due to thermal expansion and contraction. For ease of assembly and disassembly, use bolted flanges with pressure-actuated metallic seals at the connection point. To obtain greater reliability and lower cost, consider welded connections if the production rate is to be high. Use X-ray and penetrant detection methods to check the quality of the welds.

3.2.5.5 TURBOPUMP SERVICE ON THE ENGINE

The turbopump system design shall provide for routine servicing and inspection without removal from the engine or major disassembly.

Provide for replacement of the seals without disturbing the bearing assembly. In addition, provide for instrumentation replacement, leak checks, inspections, and torque checks. If possible, provide for hand turning the turbopump to permit early detection of damaged bearings, rubbing, and worn seals. Consider the use of boroscope ports to allow inspection of rotors and seals.

3.2.5.6 TURBOPUMP OVERHAUL

The turbopump system design shall provide for easy and inexpensive overhaul.

Because the turbopump replacement requires expensive engine recalibration, plan for overhaul rather than replacement. Plan for easy replacement of life-limited parts. When deciding whether to integrate parts to facilitate original manufacture or to separate parts to facilitate repair, weigh the cost of original manufacture against the probability of failure. To permit replacement of either unit without disturbing the other, try to design the pump and the turbine rotor assemblies to be balanced individually.

3.2.6 Start Systems

The start system shall meet the vehicle requirements of start time, restart time, repeatability, response, light weight, and simplicity; shall match the turbine type and turbine exhaust disposal method; and shall not endanger vehicle structural integrity.

Consider main propellant tank-head and solid-propellant start-cartridge start systems as leading candidates to meet the combined engine and vehicle requirements. Conduct a detailed trade study to make a final selection of a start system, using the methods given below in sections 3.2.6.1 through 3.2.6.4.

3.2.6.1 MAIN-PROPELLANT-TANK HEAD

The start system employing main-propellant-tank head shall provide a satisfactory start transient without undue tank pressure (weight) penalty.

Consider this start system suitable for gas-generator, staged-combustion, and propellant-expander drive cycles. Conduct a detailed analysis of the engine start with the aid of a computerized mathematical model to determine the most satisfactory sequence and control system requirements for a main propellant tank-head start. For a GG cycle, use a simple open-loop valve sequence system unless the propellant inlet pressure range is large enough to cause wide variations in the engine start transient. If wide variations in the start transient occur, provide closed-loop control of the GG oxidizer flow (controlling GG temperature). For staged-combustion and expander turbine drive cycles, conduct a detailed computer analysis to determine if closed-loop control is required during the start transient. The start of a staged-combustion-cycle engine is more sensitive to transients than that of a GG-cycle system, and the need for closed-loop control should be carefully considered.

3.2.6.2 PRESSURIZED-GAS START TANKS

The pressurized gas in the start tanks shall be sufficient in energy and quantity to provide satisfactory starts under all operating conditions.

Consider pressurized-gas start tanks a suitable starting method for GG cycles but not for low-pressure-ratio (high-flow) turbines used on staged-combustion or expander cycles. Conduct a detailed analysis of the start system, considering all operating requirements, to determine the required stored-gas energy. Account for any possible leakage of the stored gas. A computerized mathematical model of the engine system is required for this analysis.

Provide the capability for increasing the gas storage pressure to a higher value than that used in the analysis in the event that testing indicates that additional energy is required. Provide a backup system for repressurizing the start tank when long orbital coasts are a requirement of the mission. Compensate for pressure variation with temperature by storing the gas such that, under normal environmental conditions, temperature (and pressure) will increase. Use a relief valve or regulator that is set higher than the normal operating level. Specify a pressure-regulator type of device or a narrow-band relief valve for the relief system.

Minimize the number of leak paths by combining valve functions. Use welded joints where possible; specify Class I welds (i.e., welds that require radiographic, penetrant, dimensional, and visual inspection). Insulate the tank and utilize reflective coatings to minimize thermal transients.

3.2.6.3 LIQUID-PROPELLANT START TANKS

The liquid-propellant start-tank system shall provide satisfactory start without unacceptable overpressures.

Liquid-propellant start tank systems can be used for GG systems but, because of system complexity, probably are not suitable for new engine systems. However, if liquid-propellant start tanks are suitable, control the start-tank pressurization rate to prevent overpressures in the GG feed system. A start-tank pressurization time of 3 seconds is satisfactory for most GG systems. Provide orificing capability in the system for adjustments of pressurization rate.

Conduct a detailed heat-transfer and flow analysis of the start-tank system during chilldown to determine required flowrate through the system; size the fill and vent system accordingly. Under steady-state liquid conditions during fill, maintain some pressure (5 to 15 psig) in the start tank by restricting the vent system. If chilldown time is critical, determine the exact restriction experimentally. Design the vent system oversize and include orifice provisions for this purpose.

Provide a bleed hole in one of the start-tank isolation check valves. Determine the hole size by experimentation, since the required size depends on volume of trapped propellant, type of propellant, and environmental conditions. For ground-mounted start-tank systems, place the bleed hole in the check valve in the GG supply line from the main feed system.

3.2.6.4 SOLID-PROPELLANT START CARTRIDGE

The solid-propellant start-cartridge combustion rate and propellant grain size shall provide a satisfactory start transient under all operating conditions.

Consider the solid-propellant start cartridge a suitable starting method for GG and thrust-chamber-tapoff cycles. Conduct a detailed analysis of the engine start system, considering all operating requirements, to determine the required solid-cartridge burn time and flowrate. A computerized mathematical model of the engine system is required for this analysis. Control the grain temperature so that the start transient is within the safe operating range of the engine system. Minimize grain temperature variation by insulation, coatings, and control of vehicle boattail temperature and by conditioning the start cartridge prior to installation. Conduct a detailed heat-transfer analysis to define the design for minimum temperature variation and to determine the range of grain temperatures. Make the turbine drive system less sensitive to grain temperature effects by utilizing a low-energy start cartridge (providing acceleration to the 50 ± 10 percent level), thus allowing overlap of the power sources; then either provide closed-loop control to sense start-cartridge burnout and then turn on the GG, or use a check valve to isolate the start-cartridge turbine drive system from

the mainstage turbine drive system, thereby providing an automatic transition from start-cartridge power to mainstage power. If start-time repeatability is critical, utilize an electric heater blanket to maintain the propellant grain at some constant temperature higher than the maximum expected environmental temperature.

To avoid damaging detonations in the oxidizer feed system, avoid contamination by using (1) an inert-gas purge through the oxidizer system while the solid-propellant start cartridge is burning, (2) a poppet-type injector design discussed in reference 9, or (3) a check valve isolating the liquid-propellant GG from the solid-propellant start cartridge. To prevent thrust overshoot for cases in which the solid-propellant start cartridge ignites the liquid-propellant GG, provide pyrotechnic igniters in conjunction with the start-cartridge gases to minimize the overlap and use the start-cartridge gases only for ignition of the igniters. Maintain the ignition source for 1 to 2 seconds to ensure reliable ignition of the liquid propellants.

3.3 DESIGN EVALUATION

3.3.1 Engine-System Characteristics

3.3.1.1 DESIGN-POINT SYSTEM BALANCE

The power requirements and output flow characteristics of the turbopump system shall be consistent with the requirements imposed during operation of the rocket engine system.

Determine the pump headrise, pump flowrate, and turbine flowrate requirements by performing a design-point balance of the turbopump system when it is operating in the rocket engine system. Include in the system balance detailed characteristics of all of the engine components. Write steady-state equations for the power and flow required by the pumps and for the power available from the turbine. The basic power condition to be fulfilled by the turbopump system during steady-state operation is that the horsepower available from the turbine is equal to the horsepower required by the pump. The pump flow to be used when performing the power calculations is that required to produce the design engine thrust at the desired mixture ratio of the propellants. A detailed example of a system balance can be found in reference 35.

The design-point system balance determines whether the turbopump system meets the engine-system requirements. If the engine-system requirements are not met, modify the turbopump-system design.

3.3.1.2 OFF-DESIGN SYSTEM BALANCE

The turbopump system shall operate reliably and meet performance requirements over the entire operating range.

Obtain the range of planned turbopump-system operation from the engine-system balance (sec. 2.3.1.1) and then use known component tolerances from existing engines to determine the effects of off-design engine and turbopump components at the extremes of the planned operating range. Determine the operating envelope within which 95 percent of the engines will fall.

In order to assess properly the effects of off-design operation on system design requirements, analytically determine the simultaneous changes in pump head and flow and other turbopump parameters. Present this information in the form of operating ellipses, two examples of which are shown in figure 40. Each figure shows three ellipses, marked 50, 95, and 99.5 percent. These percentages are the probabilities that any normal operating point has of falling within these ellipses. A turbopump system normally should be designed to either the 95 or 99.5 percent limits.

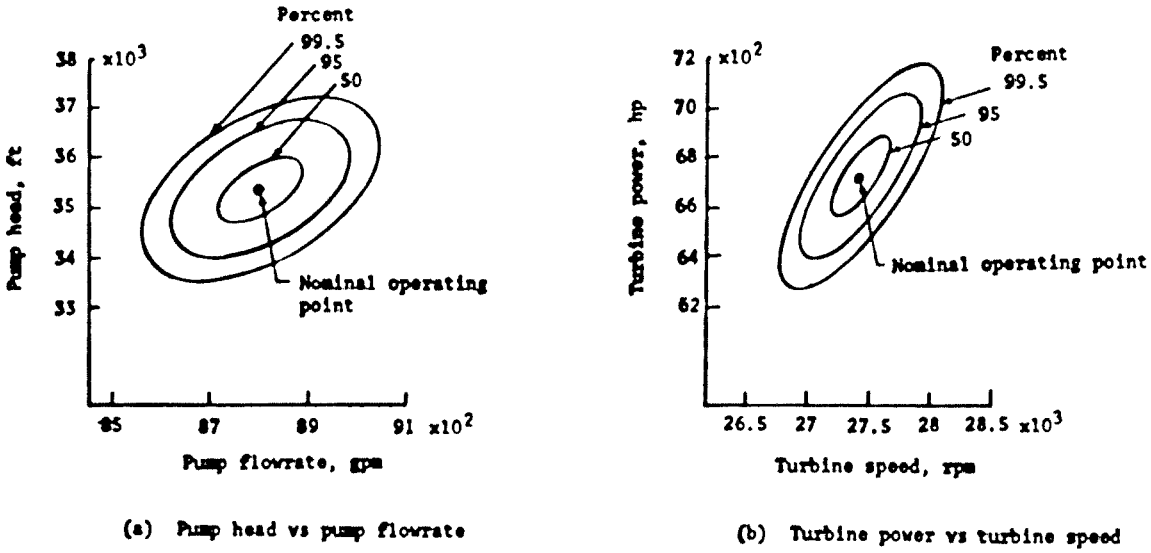

Figure 40. – Probability ellipses for turbopump operation.

Compute the ellipses by normal probability techniques. Treat each of the performance-determining parameters of the components as an independent, randomly-distributed variable with a mean equal to its nominal value, and a standard deviation determined from its tolerance. The standard deviations of each engine-dependent variable should be calculated from a table of engine linear influence coefficients and the tolerance assigned to the engine independent variable. The bivariate probability distribution should be calculated by first computing the correlation coefficient between the turbopump variables being considered (ref. 36). Finally, the effects of the predictably varying operating conditions (e.g., the variation of pump inlet pressure during flight) should be determined for each dependent variable and added algebraically to the 95-percent range to yield the 95-percent limiting values shown.

If the turbopump design does not meet the reliability and performance requirements at the extremes of this envelope, modify the design and recheck it.

3.3.1.3 CONTROL CONSTRAINTS

The turbopump system controls shall meet the response requirements of the engine, shall be simple, and shall cause minimal performance and weight penalties.

Use system balances (sec. 2.3.1.1) and system dynamic models (sec. 2.3.2) to determine the effects of control system types and locations on pressure drops, control ranges, transient responses, and stability. In addition, determine the corresponding effects of any variations in pump pressure requirements on turbopump weight and performance. Conduct tradeoffs of simplicity against resultant performance and weight penalties and, finally, select the optimum control system. Typical effects of complexity on pump discharge-pressure requirements are illustrated in figure 34 for a range of engine mixture ratios for a staged-combustion engine cycle.

3.3.2 System Dynamic Analysis

3.3.2.1 START

The turbopump system moment of inertia and low-speed torque capability shall support the attainment of the engine-system start-transient objectives.

To improve turbopump system transient response, reduce the time constant (eq. (15)) by reducing the turbopump-system moment of inertia and increasing the low-speed turbine torque. To reduce the turbopump moment of inertia, design at the highest speed consistent with the limitations discussed in section 2.2.1. Also select materials that have the highest

strength-to-density ratios and are adequate for the load and life requirements. Increasing the low-speed turbine torque will also reduce the turbopump time constant. To provide increased turbine torque at low speeds for GG rocket engine systems that start with available propellant tank head pressure, use a hot-gas valve in series before the turbine. This valve will be open during engine start to provide added turbine inlet pressure. At mainstage conditions, the hot-gas valve will be closed to achieve the steady-state operating conditions of the engine.

For systems having separate turbopumps for the oxidizer and fuel, the fuel turbopump time constant should never be greater than the oxidizer turbopump time constant. This helps prevent temperature spikes during engine start.

Check the steepness of the head/flow curve of the pump. A steep curve will tend to stabilize the system. Sweepback of the blades in a centrifugal pump will produce a steeper head/flow curve. Use analytical digital or analog engine start models to verify stable turbopump operation during transient conditions. These models are generally for a specific engine configuration and caution should be used in trying to generalize results. Evaluate the structural adequacy of the turbopump design to withstand transient overloads that may occur during the start.

3.3.2.2 THROTTLING

Turbopump throttling control systems shall meet the required engine-system response.

Consider control of the turbine working fluid for systems requiring moderate response rates (thrust change up to 20 percent per second). Assess hot-gas valve technology carefully before using hot-gas valves. Use throttling of the main liquid propellant valves when faster ramp rates are needed (thrust change greater than 20 percent per second). Also reduce the turbopump system time constant (sec. 3.3.2.1) for better response to all commands. If the pump inlet flow coefficient becomes low enough during throttling to cause suction-performance problems, consider prewhirl (ref. 37) or simple flow recirculation.

3.3.2.3 SHUTDOWN

The pump structural design shall accommodate shutdown surge pressures.

Compute surge pressures at the pump inlet, using mathematical models that reflect the engine-system configuration, valve characteristics, fluid characteristics, and suction-line geometry. Design the inlet to withstand these surge pressures.

3.3.2.4 SYSTEM INSTABILITY (POGO)

Low-frequency response characteristics of the turbopump system shall be defined.

Investigate pump-cavitation compliance (the volume change per unit pressure change) and the dynamic gain (the partial derivative of discharge pressure with respect to inlet pressure) for the turbopump-system design following the methods recommended in reference 33.

To verify the pump-cavitation compliance and the dynamic gain, conduct frequency-response tests of the turbopump system. Test the turbopump with a flight-type inlet duct by exciting the operating fluid system with a measured pulse of varying frequency.

3.3.3 System Development Testing

3.3.3.1 TURBOPUMP SYSTEM

The turbopump system testing shall demonstrate the adequacy of critical components and the turbopump assembly under conditions that simulate the anticipated extremes of actual engine operating conditions.

Conduct structural testing of certain turbopump components prior to turbopump-system testing. Conduct hydrostatic pressure testing of pump volutes and turbine manifolds to confirm the adequacy of the structural design. Conduct spinpit testing of pump rotors and turbine disks that are required to operate near material limits.

For the turbopump-system testing conducted before integration of the turbopump into the engine system, ensure that the instrumentation is adequate to verify pump and turbine performance. To do this, hold a formal design review of the entire turbopump system to ensure that the instrumentation requirements are met before making a hardware release. Critical measurements include fluid flowrates, pressures, and temperatures, and rotor speeds, accelerations, positions, and torques.

To avoid engine-system failures due to turbopump operation, apply limits testing to the turbopump. To do this, calculate the extremes of turbopump operation from the planned range of engine-system operation. Then test the turbopump at these extremes to expose potential problems.

If pump tests are conducted prior to the turbopump-system tests, consider using a variable-speed electric motor drive for low horsepower units. For high-horsepower pumps, it may be necessary to use the same turbine as will be used on the engine. For early pump tests, use the suitable pump fluids from table VII so as to reduce propellant costs. For later pump tests, use the design fluid.

Table IX. – Fluids Suitable for Pump Testing

Fluid to be pumped	Suitable test fluid
Liquid hydrogen	Air
Liquid oxygen	Liquid nitrogen*
Liquid fluorine	Liquid nitrogen*
N_2O_4	Water
RP-1	Water

*Can result in high bearing and seal wear rates

3.3.3.2 ENGINE SYSTEM

The engine-system testing shall demonstrate the adequacy of the turbopump system under conditions that simulate as nearly as practical the conditions anticipated for the actual rocket vehicle flight

First, check the modes of turbopump operation that will occur during an actual vehicle flight. Then, during the engine-system testing, duplicate these conditions as closely as possible. Examples of flight conditions that should be duplicated are as follows:

(1) Turbopump thermal-conditioning requirements.(Duplication of the conditions to be met on engine restart may require heat inputs to the turbopump assembly.)

(2) Propellant inlet pressures and temperatures.

(3) The engine start transient.

Review the results of the turbopump-system testing to determine detrimental seal leakages and rubbing or fretting of the parts. Make necessary modifications prior to engine system testing. If limits testing is employed during the turbopump system testing, the data will be more applicable to the planned engine-system testing.

APPENDIX A

Conversion of U.S. Customary Units to SI Units

Physical quantity	U.S. customary unit	SI unit	Conversion factor[a]
Density	lbm/ft^3	kg/m^3	16.02
Energy	Btu	J	1054
Enthalpy (specific)	Btu/lbm	J/kg	2324
Head or headrise	ft	m	0.3048
	ft-lbf/lbm	J/kg	2.989
Length	ft	m	0.3048
	in.	cm	2.54
	μ (micron)	μm	1
Mass	lbm	kg	0.4536
Power	hp	W	745.7
Pressure	psi ($lbf/in.^2$)	N/m^2	6895
Rotational speed	rpm	rad/sec	0.1047
Specific impulse	lbf-sec/lbm	m/sec	9.807
Stress	psi ($lbf/in.^2$)	N/m^2	6895
Temperature	°F	K	$K = \frac{5}{9}$ (°F + 459.67)
	°R	K	$K = \frac{5}{9}$ (°R)
Temperature difference	°F	K	$K = \frac{5}{9}$ (°F)
Thrust	lbf	N	4.448
Volume	ft^3	m^3	28.32×10^{-3}
	gal	m^3	3.785×10^{-3}

[a]Multiply value given in U.S. customary unit by conversion factor to obtain equivalent value in SI unit. For a complete listing of conversion factors, see Mechtly, E. A.: The International System of Units. Physical Constants and Conversion Factors. Second Revision, NASA SP-7012, 1973.

APPENDIX B
GLOSSARY

Nomenclature in the preceding text is to the greatest practical extent consistent with that used in associated monographs on turbopump system components, particularly references 1 through 5. Frequently used subscripts are presented at end of the list of terms and symbols; these subscripts are combined with the general symbol for greater precision and, when necessary, for specific identification of the relevant turbopump subsystem. For example, φ (flow coefficient) combined with subscript t is φ_t, flow coefficient at blade tip; φ_{t1} is inlet tip flow coefficient; and φ_{It1} is inducer inlet tip flow coefficient. For clarity and simplicity in the presentation of equations in the text, minimum use is made of multiple subscripts. Whenever possible, the general symbol alone is used if the context makes clear the specific meaning of the symbol.

Term or Symbol	Definition
A	area, in.^{2}
A_a	annulus area, in.^{2}
B	blockage fraction normal to flow direction due to blade plus blade boundary layer
Barske pump	low-specific-speed pump having an open-face impeller with partial radial vanes
b_2	impeller tip width, in.
boattail	aft end of a rocket that carries the propulsion system and its interface with the vehicle tankage
blowdown system	propellant pressurizing system that decays in pressure as propellant is consumed
boroscope	an arrangement of mirrors or fiber optics to enable inspection of otherwise inaccessible locations
C_o	isentropic spouting velocity, ft/sec
C_p	constant-pressure specific heat, Btu/(lbm-°R)
c	absolute fluid velocity, ft/sec
compliance	effective compressibility of a fluid, i.e., the change in fluid volume per unit pressure change

Term or Symbol	Definition
cryogenic	fluids or conditions at low temperatures, usually at or below -150° C (222° R)
D	diameter, ft or in.
D_B	blade diffusion factor
D_s	specific diameter, $ft^{5/4}/gpm^{1/2}$, $D_s = \frac{DH^{1/4}}{Q^{1/2}}$
DN	bearing speed-capability index, the product of bearing bore size (D) in mm and rotational speed (N) in rpm
drag pump	pump whose rotor consists of a disk with many short radial blades. The flow enters radially and is carried within the blade passages around the disk and is discharged radially through a port.
EW	equivalent weight, lbm
EWF	equivalent weight factor, lbm/(lbm/sec)
F	engine thrust, lbf
GG	gas generator
g	acceleration due to gravity, ft/sec^2
H	head or headrise, ft or ft-blf/lbm
HP	shaft horsepower, hp
h	specific enthalpy, Btu/lbm
Δh_v	latent heat of vaporization, Btu/lbm
I	rotating mass moment of inertia
I_s	specific impulse, lbf-sec/lbm
i	fluid incidence angle, deg
i/β	ratio of fluid incidence angle to impeller blade angle

Term or Symbol	Definition
inertance	the impeding effect of fluid inertia on transmission of oscillations in a fluid-filled conduit
J	converstion factor, J = 778 ft-lbf/Btu
k	thermal conductivity, Btu/(hr-ft-°R)
K_{DN}	empirically derived coefficient for bearings
K_{ss}	empirically derived coefficient for seals
L/D	length-to-diameter ratio
MR	mixture ratio: ratio of oxidizer to fuel, $MR = \dot{w}_o/\dot{w}_f$
N	rotational speed, rpm
NPSH	net positive suction head, ft or ft-lbf/lbm, $NPSH = \frac{P_o - P_v}{\rho}$ at pump inlet
N_s	specific speed, rpm-gpm$^{1/2}$/ft$^{3/4}$, $N_s = \frac{NQ^{1/2}}{H^{3/4}}$
o/f	ratio of oxidizer to fuel
P	pressure, psi
P_c	chamber pressure, psi
P_v	vapor pressure, psi
P_0	total pressure, psi
Pitot pump	pump in which a rotating liquid ring is created inside a rotating drum; pressurized fluid is scooped from this ring by stationary Pitot heads and ducted to the outside.
PL	stage payload, lbm
PR	pressure ratio
Q	volume flowrate, gpm

Term or Symbol	Definition
R	reaction
Rootes pump	rotary pump consisting of two intermeshing cam-like rotors that produce a positive-displacement pumping action
S	clearance between rotor and casing, in.
S_s	suction specific speed, rpm-gpm$^{1/2}$/ft$^{3/4}$, $S_s = \frac{NQ^{1/2}}{(NPSH)^{3/4}}$
S_s'	corrected suction specific speed, $S_s' = \frac{S_s}{(1 - \nu^2)^{1/2}}$
S_{eq}	torsional stress in a solid shaft of the same outside diameter as the subject shaft, psi
SS	seal speed, ft/sec
SSME	space shuttle main engine
s	specific entropy, Btu/(lbm-°R)
stall	loss of pumping capability as a result of flow separation on the suction surface of the blades
T	temperature, °R
T_0	total temperature, °R
T/C	thrust chamber
T_q	torque, in.-lbf
Tesla pump	pump similar to a centrifugal pump with the exception of the rotor configuration, which consists of many closely spaced disks that add energy to the flow by friction
TSH	thermodynamic suppression head, ft
time constant	time for a variable to reach 63% of its final value

Term or symbol	Definition
U	turbine pitchline velocity, ft/sec
U/C_0	isentropic velocity ratio
u	tangential velocity, ft/sec
u_t	blade tangential velocity (tip speed), ft/sec
VC	velocity compounded
vane pump	pump consisting of a rotor with sliding vanes that is mounted in an eccentric housing
W	weight, lbm
$\dot{w}$	weight flowrate, lbm/sec
w	fluid velocity relative to blade
Z	number of blades
α	vapor volume percent at the pumping limit
β	factor for thermodynamic suppression head; blade angle
γ	gas specific heat ratio
Δ	incremental change
δ	ratio of inlet tip diameter to discharge tip diameter, $\delta = \frac{D_{t1}}{D_{t2}}$
η	efficiency
$(\eta_T)_{T\text{-}S}$	turbine total-to-static efficiency
ν	ratio of inlet hub diameter to inlet tip diameter, $\nu = \frac{D_{h1}}{D_{t1}}$
ρ	density, lbm/ft^3
σ	blade solidity (ratio of chord length to spacing)

Term or symbol	Definition
τ	turbopump time constant, $\tau = \frac{I}{T_q N}$
φ	flow coefficient, ref. to blade tip speed, $\varphi = \frac{c_m}{u_t}$
ψ	stage head coefficient, ref. to blade tip, $\psi = \frac{gH}{u_t^2}$

SUBSCRIPTS

act	actual
des	design
E	engine
f	fuel
h	hub
I	inducer
id	ideal
isen	isentropic
L	liquid
m	meridional component
min	minimum
ms	mean station
o	oxidizer
P	pump
si (i = 1,2,3,etc)	specific value for entropy (fig. 35)

SUBSCRIPTS

stall	stall
T	turbine
T/C	thrust chamber
TP	turbopump
t	blade tip
u	tangential component
v	vapor
0	total
1	inlet
2	discharge; exhaust

Material[1]	Identification
A-50	50/50 blend of N_2H_4 and UDMH
Armalon	trade name of E. I. duPont Co. for glass-filled Teflon
Bearium B-10	trade name of Bearium Metals Corp. (Rochester, N.Y.) for leaded bronze
CRES	corrosion-resistant steel
Freon	trade name of E.I. duPont Co. for a family of fluorinated hydrocarbons
GN_2	gaseous nitrogen per MIL-P-27401
Hastelloy C	Haynes-Stellite Corp. designation for a nickel-base high-temperature alloy
hydrazine	N_2H_4, propellant grade per MIL-P-26536

[1]Additional information on metallic materials herein can be found in the 1972 SAE Handbook, SAE, Two Pennsylvania Plaza, New York, N.Y.; in MIL-HDBK-5B, Metallic Materials and Elements for Aerospace Vehicle Structures, Dept. of Defense, Washington, D.C., Sept. 1971; and in Metals Handbook (8th ed.), Vol. 1: Properties and Selection of Metals, Am. Society for Metals (Metals Park, OH), 1961.

Material	Identification
Inconel 625, 718	trade names of International Nickel Co. for austenitic nickel-base alloys
IRFNA	inhibited red fuming nitric acid, propellant grade per MIL-P-7254
Kel-F	trade name of 3M Corp. for a high-molecular-weight polymer of chlorotrifluorethylene
"K" monel	trade name of International Nickel Co. for a wrought age-hardenable alloy containing nickel, copper, and aluminum
LH_2	liquid hydrogen, propellant grade per MIL-P-27201
LOX, LO_2	liquid oxygen, propellant grade per MIL-P-25508
N_2H_4	hydrazine, propellant grade per MIL-P-26536
N_2O_4	nitrogen tetroxide, propellant grade per MIL-P-26539
RJ-1	ram jet fuel, a high-density, kerosene-like hydrocarbon, propellant grade per MIL-F-25558
RP-1	kerosene-base high-energy hydrocarbon fuel, propellant grade per MIL-P-25576
Rene 41	trade name of General Electric Co. for an austenitic nickel-base alloy
Teflon	trade name of E.I. duPont Co. for a polymer of tetrafluorethylene
UDMH	unsymmetrical dimethylhydrazine, propellant grade per MIL-P-25604
321, 347	austenitic nickel-chromium-iron steels
431	martensitic stainless steel
2219	wrought aluminum alloy with copper as principal alloying element
6061	wrought aluminum alloy with magnesium and silicon as principal alloying elements

Vehicles and Engines	Identification
Agena YLR81-BA-11	engine for Agena upper stage; 15 000 lbf thrust; uses IRFNA/UDMH; manufactured by Bell Aerospace Company, Division of Textron

Vehicles and Engines	Identification
Atlas	launch vehicle using MA-5 engine system
A-7	engine system for Redstone; 78 000 lbf thrust; used LOX/alcohol; manufactured by Rocketdyne Division, North American Aviation, Inc.
Centaur	high-energy upper stage for Atlas and Titan; uses two RL10A-3-3 engines
F-1	engine for S-IC; 1 500 000 lbf thrust; uses LOX/RP-1; manufactured by Rocketdyne Division, Rockwell International Corp.
H-1	engine for S-IB; 205 000 lbf thrust; uses LOX/RP-1; manufactured by Rocketdyne
J-2	engine for S-II; 230 000 lbf thrust; uses LOX/LH_2; manufactured by Rocketdyne
J-2S	uprated J-2; 265 000 lbf thrust; uses LOX/LH_2; designed and developed by Rocketdyne
LR-87-AJ-3, -5,-7,-9	Aerojet engines for first stage of the Titan vehicles • the -3 uses LOX/RP-1, and develops 150 000 lbf thrust • the -5, -7, -9 uses N_2O_4/A-50, and develop 215 000 lbf thrust
LR-91-AJ-3, -5, -7, -9	Aerojet engines for the second stage of the Titan vehicles • the -3 uses LOX/RP-1, and develops 80 000 lbf thrust • the -5, -7, -9 use N_2O_4/A-50, and develop 100 000 lbf thrust
MA-5	five-engine system for Atlas vehicle containing 2 booster, 2 vernier, and 1 sustainer engines; boosters provide 330 000 to 370 000 lbf thrust; sustainer, 57 000 to 60 000 lbf thrust; uses LOX/RP-1; manufactured by Rocketdyne
MB-3	engine system for Thor vehicle; 170 000 lbf thrust; uses LOX/RP-1; manufactured by Rocketdyne
Redstone	early launch vehicle using A-7 engine system
RL10A-3-3	engine for Centaur; 15 000 lbf thrust; uses LOX/LH_2; manufactured by Pratt & Whitney Aircraft Division of United Aircraft Corp.
Saturn V	launch vehicle for Apollo manned mission to the moon

Vehicles and Engines	Identification
S-IB	booster using a cluster of eight H-1 engines
S-IC	first stage (booster) of the Apollo Saturn V vehicle; uses five F-1 engines
S-II	second stage of the Apollo Saturn V vehicle; uses a cluster of five J-2 engines
S-IVB	third stage of the Apollo Saturn V vehicle; uses a single J-2 engine
Thor	launch vehicle using MB-3 engine system
Titan I, II, III	family of launch vehicles using the LR-87-AJ and LR-91-AJ series of rocket engines developed by Aerojet Liquid Rocket Co.
X-8	experimental throttleable rocket engine; 90 000 lbf thrust; uses LOX/LH_2; developed by Rocketdyne

REFERENCES

1. Anon.: Liquid Rocket Engine Turbopump Inducers. Space Vehicle Design Criteria Monograph, NASA SP-8052, May 1971.

2. Anon.: Liquid Rocket Engine Centrifugal Flow Turbopumps. Space Vehicle Design Criteria Monograph, NASA SP-8109, December 1973.

3. Anon.: Liquid Rocket Engine Axial Flow Turbopumps. Space Vehicle Design Criteria Monograph (to be published).

4. Anon.: Liquid Rocket Engine Turbines. Space Vehicle Design Criteria Monograph, NASA SP-8110, January 1974.

5. Anon.: Liquid Rocket Engine Turbopump Gears. Space Vehicle Design Criteria Monograph, NASA SP-8100, March 1974.

6. Anon.: Liquid Rocket Engine Turbopump Bearings. Space Vehicle Design Criteria Monograph, NASA SP-8048, March 1971.

7. Anon.: Liquid Rocket Engine Turbopump Rotating-Shaft Seals. Space Vehicle Design Criteria Monograph (to be published).

8. Anon.: Liquid Rocket Engine Turbopump Shafts and Couplings. Space Vehicle Design Criteria Monograph, NASA SP-8101, September 1972.

9. Anon.: Liquid Propellant Gas Generators. Space Vehicle Design Criteria Monograph, NASA SP-8081, March 1972.

10. Anon.: Liquid Rocket Lines, Flexible Tubing, Bellows, and Filters. Space Vehicle Design Criteria Monograph (to be published).

*11. Marks, A. E.: Induced Pump Discharge Flow Oscillations Due to Position H-Q Operation. LAP 67-100, Rocketdyne Div., North American Aviation, Inc., unpublished, 1967.

12. Stepanoff, A. J.: Centrifugal and Axial Flow Pumps. John Wiley & Sons, Inc., 1957.

13. Balje, O.E.: A Study on Design Criteria and Matching of Turbomachines: Part B – Compressor and Pump Performance and Matching of Turbocomponents. J. Eng. Power, Trans. ASME, Series A, vol. 84, 1962, pp. 103-114.

14. Klassen, H. A.: Cold-Air Investigation of Effects of Partial Admission on Performance of 3.75-Inch Mean-Diameter Single-Stage Axial Flow Turbine. NASA TN D-4700, August 1968.

*Dossier for design criteria monograph "Turbopump Systems for Liquid Rocket Engines." Unpublished. Collected source material available for inspection at NASA Lewis Research Center, Cleveland, Ohio.

15. Stenning, A. H.: Design of Turbines for High-Energy-Fuel, Low-Power-Output Applications. Report 79, Dynamic Anal. and Control Lab., Mass. Inst. Tech., September 1953.

16. Balje, O.E.: A Study on Design Criteria and Matching of Turbomachines: Part A – Similarity Relations and Design Criteria of Turbines. J. Eng. Power, Trans. ASME, Series A, vol. 84, 1962, pp. 83-102.

17. Wong, G. S.; and Wagner, W. R.: Thermodynamic Improvements in Liquid Hydrogen Turbopumps – Second Interim Report. R-7585, Rocketdyne Div., North American Aviation, Inc., July 1967.

18. Huzel, D. K.; and Huang, D. W.: Design of Liquid Propellant Rocket Engines. Second ed., NASA SP-125, 1971.

*19. Dinges, R. A.: Mark 19 Final Report. TDR-3117-3011, Rocketdyne Div., North American Aviation, Inc., unpublished, August 1963.

20. MacGregor, C. A.; and Csomor, A.: Rotating and Positive Displacement Pumps for Low-Thrust Rocket Engines. NASA CR-72965, Rocketdyne Div., Rockwell International Corp., February 1974.

21. Hoshide, R. K.; and Nielson, C. E.: Study of Blade Clearance Effects on Centrifugal Pumps – Final Report. NASA CR-120815, R-8806, Rocketdyne Div., North American Rockwell Corp., November 1972.

22. Gelder, T. F.; Ruggeri, R. S.; and Moore, R. D.: Cavitation Similarity Considerations Based on Measured Pressure and Temperature Depressions in Cavitated Regions of Freon-114. NASA TN D-3509, July 1966.

23. Bissell, W. R.; Wong, G. S.; and Winstead, T. W.: Analysis of Two-Phase Flow in LH_2 Pumps for O_2/H_2 Rocket Engines. J. Spacecraft Rockets, vol. 7, no. 6, June 1970, pp. 707-713.

24. King, J. A.: Design of Inducers for Two-Phase Operation – Final Report. R-8283, Rocketdyne Div., North American Rockwell Corp., July 1970.

25. King, J. A.: Design of Inducers for Two-Phase Oxygen – Final Report. R-8832, Rocketdyne Div., North American Rockwell Corp., January 1972.

26. Wong, G. S.: High Pressure Pumping Technology (U). R-5833, Rocketdyne Div., North American Aviation, Inc., October 1964. (Confidential)

27. Young, W. E.; and Reddecliff, J. M.: Investigation of Hydrostatic Bearings for Use in High Pressure Cryogenic Turbopumps – Final Report (U). AFRPL TR-67-130, Pratt & Whitney Aircraft Div., United Aircraft Corp., May 1967. (Confidential)

*Dossier for design criteria monograph "Turbopump Systems for Liquid Rocket Engines." Unpublished. Collected source material available for inspection at NASA Lewis Research Center, Cleveland, Ohio.

28. Anon.: Final Program Progress Report for Product Engineering, Task I, Turbomachinery (U). R-5652-4P, Rocketdyne Div., North American Aviation, Inc., May 1965. (Confidential)

29. Lieblein, S.; Schwenk, J. C.; and Broderick, R. L.: Diffusion Factor for Estimating Losses and Limiting Blade Loadings in Axial-Flow-Compressor Blade Elements. NACA RM-E53D01, 1953.

30. Anon.: Advanced Engine Design Study, Bell (AEB). PWA Report FR-2488 Pratt & Whitney Aircraft Div., United Aircraft Corp., July 1967.

31. Anon.: H-1 Engine System Transfer Functions for Support of S-IVB Vehicle Longitudinal Stability (Pogo). R-6813, Rocketdyne Div., North American Aviation, Inc., December 1966.

32. Anon.: Engine System Transfer Functions for Support of S-V Vehicle Longitudinal Stability (Pogo) Analysis Program. R-6929, Rocketdyne Div., North American Aviation, Inc., March 1967.

33. Anon.: Investigation of 17 Hz Closed Loop Instability on S-II Stage of Saturn V. R-7970, Rocketdyne Div., North American Rockwell Corp., August 1969.

34. Anon.: Prevention of Coupled Structure – Propulsion Instability (Pogo). Space Vehicle Design Criteria Monograph, NASA SP-8055, October 1970.

35. Wieseneck, H. C.: RSS-8314-1, Space Shuttle Main Engine, Phase B, Engine System Performance Model Program. R-8892P (Enclosure 1), Rocketdyne Div., North American Rockwell Corp., April 1971.

36. Mood, A.F.: Introduction to the Theory of Statistics. McGraw-Hill Book Co. (New York), 1950.

37. Wong, G. S.; Macgregor, C. A.; and Hoshide, R.K.: Suppression of Cavitation and Nonstable Flow in Throttled Turbopumps. J. Spacecraft Rockets, vol. 2, no. 1, Jan.-Feb. 1965, pp. 73-80.

NASA SPACE VEHICLE DESIGN CRITERIA MONOGRAPHS ISSUED TO DATE

ENVIRONMENT

SP-8005	Solar Electromagnetic Radiation, Revised May 1971
SP-8010	Models of Mars Atmosphere (1967), May 1968
SP-8011	Models of Venus Atmosphere (1972), Revised September 1972
SP-8013	Meteoroid Environment Model–1969 (Near Earth to Lunar Surface), March 1969
SP-8017	Magnetic Fields–Earth and Extraterrestrial, March 1969
SP-8020	Mars Surface Models (1968), May 1969
SP-8021	Models of Earth's Atmosphere (90 to 2500 km), Revised March 1973
SP-8023	Lunar Surface Models, May 1969
SP-8037	Assessment and Control of Spacecraft Magnetic Fields, September 1970
SP-8038	Meteoroid Environment Model–1970 (Interplanetary and Planetary), October 1970
SP-8049	The Earth's Ionosphere, March 1971
SP-8067	Earth Albedo and Emitted Radiation, July 1971
SP-8069	The Planet Jupiter (1970), December 1971
SP-8084	Surface Atmospheric Extremes (Launch and Transportation Areas), Revised June 1974
SP-8085	The Planet Mercury (1971), March 1972
SP-8091	The Planet Saturn (1970), June 1972
SP-8092	Assessment and Control of Spacecraft Electromagnetic Interference, June 1972
SP-8103	The Planets Uranus, Neptune, and Pluto (1971), November 1972
SP-8105	Spacecraft Thermal Control, May 1973

STRUCTURES

SP-8001	Buffeting During Atmospheric Ascent, Revised November 1970
SP-8002	Flight-Loads Measurements During Launch and Exit, December 1964
SP-8003	Flutter, Buzz, and Divergence, July 1964
SP-8004	Panel Flutter, Revised June 1972
SP-8006	Local Steady Aerodynamic Loads During Launch and Exit, May 1965
SP-8007	Buckling of Thin-Walled Circular Cylinders, Revised August 1968
SP-8008	Prelaunch Ground Wind Loads, November 1965
SP-8009	Propellant Slosh Loads, August 1968
SP-8012	Natural Vibration Modal Analysis, September 1968
SP-8014	Entry Thermal Protection, August 1968
SP-8019	Buckling of Thin-Walled Truncated Cones, September 1968
SP-8022	Staging Loads, February 1969
SP-8029	Aerodynamic and Rocket-Exhaust Heating During Launch and Ascent May 1969
SP-8030	Transient Loads From Thrust Excitation, February 1969
SP-8031	Slosh Suppression, May 1969
SP-8032	Buckling of Thin-Walled Doubly Curved Shells, August 1969
SP-8035	Wind Loads During Ascent, June 1970
SP-8040	Fracture Control of Metallic Pressure Vessels, May 1970
SP-8042	Meteoroid Damage Assessment, May 1970
SP-8043	Design-Development Testing, May 1970
SP-8044	Qualification Testing, May 1970
SP-8045	Acceptance Testing, April 1970
SP-8046	Landing Impact Attenuation for Non-Surface-Planing Landers, April 1970

SP-8050	Structural Vibration Prediction, June 1970
SP-8053	Nuclear and Space Radiation Effects on Materials, June 1970
SP-8054	Space Radiation Protection, June 1970
SP-8055	Prevention of Coupled Structure-Propulsion Instability (Pogo), October 1970
SP-8056	Flight Separation Mechanisms, October 1970
SP-8057	Structural Design Criteria Applicable to a Space Shuttle, Revised March 1972
SP-8060	Compartment Venting, November 1970
SP-8061	Interaction with Umbilicals and Launch Stand, August 1970
SP-8062	Entry Gasdynamic Heating, January 1971
SP-8063	Lubrication, Friction, and Wear, June 1971
SP-8066	Deployable Aerodynamic Deceleration Systems, June 1971
SP-8068	Buckling Strength of Structural Plates, June 1971
SP-8072	Acoustic Loads Generated by the Propulsion System, June 1971
SP-8077	Transportation and Handling Loads, September 1971
SP-8079	Structural Interaction with Control Systems, November 1971
SP-8082	Stress-Corrosion Cracking in Metals, August 1971
SP-8083	Discontinuity Stresses in Metallic Pressure Vessels, November 1971
SP-8095	Preliminary Criteria for the Fracture Control of Space Shuttle Structures, June 1971
SP-8099	Combining Ascent Loads, May 1972
SP-8104	Structural Interaction With Transportation and Handling Systems, January 1973

GUIDANCE AND CONTROL

SP-8015	Guidance and Navigation for Entry Vehicles, November 1968

SP-8016	Effects of Structural Flexibility on Spacecraft Control Systems, April 1969
SP-8018	Spacecraft Magnetic Torques, March 1969
SP-8024	Spacecraft Gravitational Torques, May 1969
SP-8026	Spacecraft Star Trackers, July 1970
SP-8027	Spacecraft Radiation Torques, October 1969
SP-8028	Entry Vehicle Control, November 1969
SP-8033	Spacecraft Earth Horizon Sensors, December 1969
SP-8034	Spacecraft Mass Expulsion Torques, December 1969
SP-8036	Effects of Structural Flexibility on Launch Vehicle Control Systems, February 1970
SP-8047	Spacecraft Sun Sensors, June 1970
SP-8058	Spacecraft Aerodynamic Torques, January 1971
SP-8059	Spacecraft Attitude Control During Thrusting Maneuvers, February 1971
SP-8065	Tubular Spacecraft Booms (Extendible, Reel Stored), February 1971
SP-8070	Spaceborne Digital Computer Systems, March 1971
SP-8071	Passive Gravity-Gradient Libration Dampers, February 1971
SP-8074	Spacecraft Solar Cell Arrays, May 1971
SP-8078	Spaceborne Electronic Imaging Systems, June 1971
SP-8086	Space Vehicle Displays Design Criteria, March 1972
SP-8096	Space Vehicle Gyroscope Sensor Applications, October 1972
SP-8098	Effects of Structural Flexibility on Entry Vehicle Control Systems, June 1972
SP-8102	Space Vehicle Accelerometer Applications, December 1972

CHEMICAL PROPULSION

SP-8087	Liquid Rocket Engine Fluid-Cooled Combustion Chambers, April 1972
SP-8109	Liquid Rocket Engine Centrifugal Flow Turbopumps, December 1973
SP-8052	Liquid Rocket Engine Turbopump Inducers, May 1971
SP-8110	Liquid Rocket Engine Turbines, January 1974
SP-8081	Liquid Propellant Gas Generators, March 1972
SP-8048	Liquid Rocket Engine Turbopump Bearings, March 1971
SP-8101	Liquid Rocket Engine Turbopump Shafts and Couplings, September 1972
SP-8100	Liquid Rocket Engine Turbopump Gears, March 1974
SP-8088	Liquid Rocket Metal Tanks and Tank Components, May 1974
SP-8094	Liquid Rocket Valve Components, August 1973
SP-8097	Liquid Rocket Valve Assemblies, November 1973
SP-8090	Liquid Rocket Actuators and Operators, May 1973
SP-8080	Liquid Rocket Pressure Regulators, Relief Valves, Check Valves, Burst Disks, and Explosive Valves, March 1973
SP-8064	Solid Propellant Selection and Characterization, June 1971
SP-8075	Solid Propellant Processing Factors in Rocket Motor Design, October 1971
SP-8076	Solid Propellant Grain Design and Internal Ballistics, March 1972
SP-8073	Solid Propellant Grain Structural Integrity Analysis, June 1973
SP-8039	Solid Rocket Motor Performance Analysis and Prediction, May 1971
SP-8051	Solid Rocket Motor Igniters, March 1971
SP-8025	Solid Rocket Motor Metal Cases, April 1970
SP-8041	Captive-Fired Testing of Solid Rocket Motors, March 1971

☆ U.S. GOVERNMENT PRINTING OFFICE: 1975—635-049 / 73