Marshall Technical Library
SKYLAB COLLECTION

Do not Remove from Library

NASA TECHNICAL MEMORANDUM

October 1974

NASA TM X-64880

MSFC SKYLAB KOHOUTEK PROJECT REPORT

Skylab Program Office

NASA

PROPERTY OF
MSFC LIBRARY

George C. Marshall Space Flight Center
Marshall Space Flight Center, Alabama

TECHNICAL REPORT STANDARD TITLE PAGE

1. REPORT NO. NASA TM X-64880	2. GOVERNMENT ACCESSION NO.	3. RECIPIENT'S CATALOG NO.
4. TITLE AND SUBTITLE MSFC SKYLAB KOHOUTEK PROJECT REPORT		5. REPORT DATE October 1974
		6. PERFORMING ORGANIZATION CODE
7. AUTHOR(S)		8. PERFORMING ORGANIZATION REPORT #
9. PERFORMING ORGANIZATION NAME AND ADDRESS George C. Marshall Space Flight Center Marshall Space Flight Center, Alabama 35812		10. WORK UNIT NO.
		11. CONTRACT OR GRANT NO.
12. SPONSORING AGENCY NAME AND ADDRESS National Aeronautics and Space Administration Washington, D. C. 20546		13. TYPE OF REPORT & PERIOD COVERED Technical Memorandum
		14. SPONSORING AGENCY CODE

15. SUPPLEMENTARY NOTES

16. ABSTRACT

This report documents the Skylab 4 experiments' selection for observing of the Comet Kohoutek, 1973f. The report also reflects pre-mission planning versus the actual experiment performance based upon the changing cometary parameters. The experiment concepts, hardware, operational performance and anomalies are discussed. Experiments which viewed the comet were mainly through the SAL and ATM, but some were handheld and EVA. A complete astronaut commentary appears as appendixes.

17. KEY WORDS	18. DISTRIBUTION STATEMENT Unclassified-unlimited James D. Ledbetter

19. SECURITY CLASSIF. (of this report)	20. SECURITY CLASSIF. (of this page)	21. NO. OF PAGES	22. PRICE
Unclassified	Unclassified	188	NTIS

MSFC - Form 3292 (Rev December 1972)

For sale by National Technical Information Service, Springfield, Virginia 22151

TABLE OF CONTENTS

		Page
TABLE OF CONTENTS		iii
LIST OF FIGURES		iv
LIST OF TABLES		v
NONSTANDARD ABBREVIATIONS		vi
SECTION I.	SUMMARY	1
SECTION II.	INTRODUCTION	2
SECTION III.	PREMISSION EXPERIMENT SELECTION	6
	A. Existing Experiment Hardware	6
	B. New Experiment Hardware	8
SECTION IV.	VIEWING CONSTRAINTS	13
	A. Comet Brightness	13
	B. Scientific Airlock Constraints	13
	C. ATM Viewing Constraints	16
	D. EVA Constraints	16
	E. Handheld Viewing Constraints	16
SECTION V.	VEHICLE MANEUVERING	18
SECTION VI.	EXPERIMENTS	19
	A. S019 UV Stellar Astronomy	19
	B. S063 UV Airglow Horizon Photography	27
	C. S073 Gegenschein/Zodiacal Light	28
	D. S183 Ultraviolet Panorama	34
	E. S201 Far-UV Electronographic Camera	36
	F. S233 Kohoutek Photometric Photography	42
	G. T025 Coronagraph Contamination Measurements	55
	H. S052 White Light Coronagraph	61
	I. S054 X-Ray Spectrographic Telescope	64
	J. S055 UV Scanning Polychromator - Spectroheliometer	70
	K. S056 XUV and X-Ray Telescope	73
	L. S082A XUV Spectroheliograph	75
	M. S082B Ultraviolet Spectrography	77
SECTION VII.	CONCLUSION	80

		Page
APPENDIX A.	SKYLAB 4 CREW COMMENTS ON KOHOUTEK	81
APPENDIX B.	COMET KOHOUTEK SCIENCE CONFERENCES WITH THE CREW .	138
APPENDIX C.	ASTRONAUTS DESCRIPTION OF COMET VIEWING EXPERIMENTS	156
APPENDIX D.	COMET ORBITAL PARAMETERS	167
REFERENCES		181
APPROVAL		182

LIST OF FIGURES

Figure	Title	Page
1.	Kohoutek Viewing Program	5
2.	Comet Orbit	7
3.	Comet Brightness	14
4.	Comet Tail Length	15
5.	Comet Viewing Time While in Earth's Shadow	17
6.	S019 Telescope Optical System	20
7.	Optical Canister with Film Canister Installed	22
8.	Articulated Mirror Operating Configuration	23
9.	AMS Viewing Capability	24
10.	S183 Optical Train	37
11.	S201 Far UV Camera	40
12.	CM-1 Window Viewing Constraints	44
13.	STS-242 Window Viewing Constraints	45
14.	STS-243 Window Viewing Constraints	46
15.	Coronagraph Contamination Measurement Assembly	56
16.	T025 Mounting Bracket	57
17.	S052 Coronagraph	62
18.	ATM Canister, Experiment Arrangement	63
19.	S054 X-Ray Spectrographic Telescope	68
20.	S055 Optical Schematic	71
21.	S056 Schematic	74
22.	S082A Operational Schematic	76
23.	S082B Optical Schematic	79

LIST OF TABLES

Table	Title	Page
I.	Experiment Performance Summary	4
II.	Characteristics of Corollary Experiments Available for Comet Viewing	9
III.	Cometary Science Objectives of Corollary Experiments	10
IV.	ATM Experiment Characteristics for Kohoutek	11
V.	Cometary Science Objectives of ATM	12
VI.	S019 Operational Summary	25
VII.	S063 Operational Summary	29
VIII.	S073 Operational Summary	35
IX.	S183 Operational Summary	38
X.	S201 Operational Summary	41
XI.	S233 Operational Summary	47
XII.	T025 Filter Characteristics	58
XIII.	T025 Operational Summary	59
XIV.	ATM Operational Summary	65
XV.	S055 Detector Characteristics	72

NONSTANDARD ABBREVIATIONS

AMS	Articulated Mirror System
ATM	Apollo Telescope Mount
CC	Capsule Communicator
CCW	Counter Clockwise
CDR	Commander
CM	Command Module
CMG	Control Moment Gyroscope
CW	Clockwise
DOY	Day of Year
EVA	Extravehicular Activity
FOV	Field-of-View
GMT	Greenwich Mean Time
HH	Handheld Photography
ICD	Interface Control Document
JOP	Joint Operating Program
JSC	Lyndon B. Johnson Space Center
KV	Kilo-volts
MAGN	Magnitude
MAR	Mission Action Request
MD	Mission Day
MOPS	Mission Operations and Planning System
MRD	Mission Requirements Document
MSFC	George C. Marshall Space Flight Center

OWS	Orbital Workshop
PAD	Preadvisory Data
PI	Principal Investigator
PLT	Pilot
ROT	Rotation
SAL	Scientific Airlock
SI	Solar Inertial
SL-4	Skylab-4
SPT	Science Pilot
STS	Structural Transition Section
TV	Television
UV	Ultraviolet
VIS	Visible
XUV	Extreme Ultraviolet

TECHNICAL MEMORANDUM X-64880

MSFC SKYLAB KOHOUTEK PROJECT REPORT

SECTION I. SUMMARY

The Comet Kohoutek's (1973f) appearance and orbital trajectory provided NASA with a unique opportunity to perform an observing program on the Skylab SL-4 mission. Due to the optimistic premission comet brightness predictions and the comet trajectory being extremely compatible with the SL-4 orbit for viewing, NASA initiated a study to ascertain the feasibility of viewing the comet with Skylab Experiments. The study proved to be extremely practical and subsequently the comet was observed on over one hundred occasions by thirteen Skylab experiments in spectral bands from x-rays, through ultraviolet and visible bands. Observations were performed: by corollary experiments through the scientific airlock (SAL); by handheld photography (HH); during extravehicular activity (EVA) and by the Apollo Telescope Mount (ATM) experiments.

The observation program ran from November 25, 1973, to February 2, 1974, and should provide evolutionary comet data during its most active period. The comet's perihelion, or closest approach to the sun, occurred on December 28, 1973. The data taken by Skylab experiments provided minimum-atmosphere photography and is hoped will yield never-before-obtained ultraviolet spectrum data on a comet. Observations performed during the mission very closely approached premission desires, modified only by the difference in actual versus predicted comet brightness.

It is expected that the Skylab data will provide engineers and scientists with both useful design and scientific data to aid in the development of future cometary research. Skylab experiment results may be applied to anticipated fly-by and rendezvous missions to comets in the future.

SECTION II. INTRODUCTION

This report describes the utilization of various Skylab experiments which viewed the Comet Kohoutek, 1973f. The Comet Kohoutek was discovered by the Czechoslovakian astronomer, Dr. Lubos Kohoutek, while examining photographic plates taken in early March, 1973, at the Hamburg Observatory in West Germany. The early discovery of this comet, approximately nine months before perihelion, was unprecedented and allowed sufficient time for large-scale, coordinated planning of observational programs. The early brightness predictions were extremely encouraging in terms of the comet becoming eventually detectable to a wide range of scientific instruments. The fact that Kohoutek also appeared to be a "new" comet, i.e., one that had never before ventured into the inner solar system, indicated the possibility of this being an excellent opportunity to study the primordial nature of comets and to increase our knowledge of the nature and origin of the solar system.

Shortly after the discovery of the comet, the National Aeronautics and Space Administration (NASA) established Operation Kohoutek for the purpose of coordinating the study of Kohoutek with all possible means, i.e., spacecraft--manned and unmanned, rockets, balloons, aircraft, and ground observatories. Because the comet's orbit would come so near the sun and should be readily observable during the Skylab 4 (SL-4) mission time frame, Skylab Principal Investigators and the Office of Space Sciences in NASA Headquarters requested that the Skylab instruments and crew carry out a new and extensive observational program.

In July, 1973, the Skylab Program Director asked the Marshall Space Flight Center (MSFC) to take the lead in performing a compatibility study to determine if the Skylab vehicle would be capable of supporting Operation Kohoutek with a comet viewing program. The study was conducted based on the use of 13 experiments. Eleven of the experiments were already onboard Skylab, and two were new candidates (S201, the Far UV Electronographic Camera, and S233, Kohoutek Photometric Photography).

Skylab 4 (SL-4) was the third mission by a three man crew. The astronauts were Commander Gerald Carr, Science Pilot Edward Gibson, and Pilot William Pogue. The mission began on November 16, 1973, and ended February 8, 1974.

Included in the report are the Kohoutek Viewing Program Summary, discussion of premission experiment selection, definition of viewing constraints, descriptions of required vehicle maneuvers and descriptions of each experiment and its observations. Detailed evaluations of the

experiment hardware are covered in the references. Appendixes are: Appendix A, Skylab 4 Crew Comments on Kohoutek; Appendix B, Comet Kohoutek Science Conferences with the Crew; Appendix C, Astronauts Description of Comet Viewing Experiments; Appendix D, Comet Orbital Parameters.

The Comet Kohoutek was viewed by selected Skylab experiments as identified in table I. The total numbers of actual performances compared to the premission Mission Requirements Document (MRD) are listed in table I. A Kohoutek Viewing Program summary listing the experiments and the days on which they were performed is given in figure 1.

SAL observations began on November 25, 1973, and ended on February 2, 1974. The ATM experiments were less sensitive, since they were designed to look directly at the sun. ATM observations were thereby constrained to occur between December 14, 1973, and and January 6, 1974.

Subsequent paragraphs discuss the premission considerations that were made to select these experiments for comet viewing, including both hardware and cometary parameters. All dates and times referred to in subsequent paragraphs are Greenwhich Mean Time (GMT).

TABLE I. EXPERIMENT PERFORMANCE SUMMARY

EXPERIMENT	PERFORMANCE LOCATION	MINIMUM PER MRD	BASELINED PER MRD	ACTUAL
S019 UV Stellar Astronomy	SAL	7	20	13
S063 UV Airglow Horizon Photography	SAL and Hand Held	7	21	14
		Target of Opportunity		8
S073 Gegenschein/Zodiacal Light	SAL	1	1	1
S183 Ultraviolet Panorama	SAL	7	13	6
S201 Far UV Electronographic Camera	SAL and ATM Truss during EVA	8	15	14
S233 Kohoutek Photometric Photography	Hand Held MDA and CM	34	72	69
T025 Coronagraph Contamination Measurements	AM Truss during EVA	1	2	2
S052 White Light Coronagraph	ATM	*49/13	51/15	49/13
S054 X-Ray Spectrographic Telescope	ATM	*49/13	51/15	49/13
S055 UV Scanning Polychromator Spectroheliometer	ATM	*49/13	51/15	49/13
S056 XUV and X-Ray Telescope	ATM	*49/13	51/15	49/13
S082A XUV Spectroheliograph	ATM	*49/13	51/15	49/13
S082B Ultraviolet Spectrography	ATM	*49/13	51/15	49/13

*Number of orbits/number of observing days.

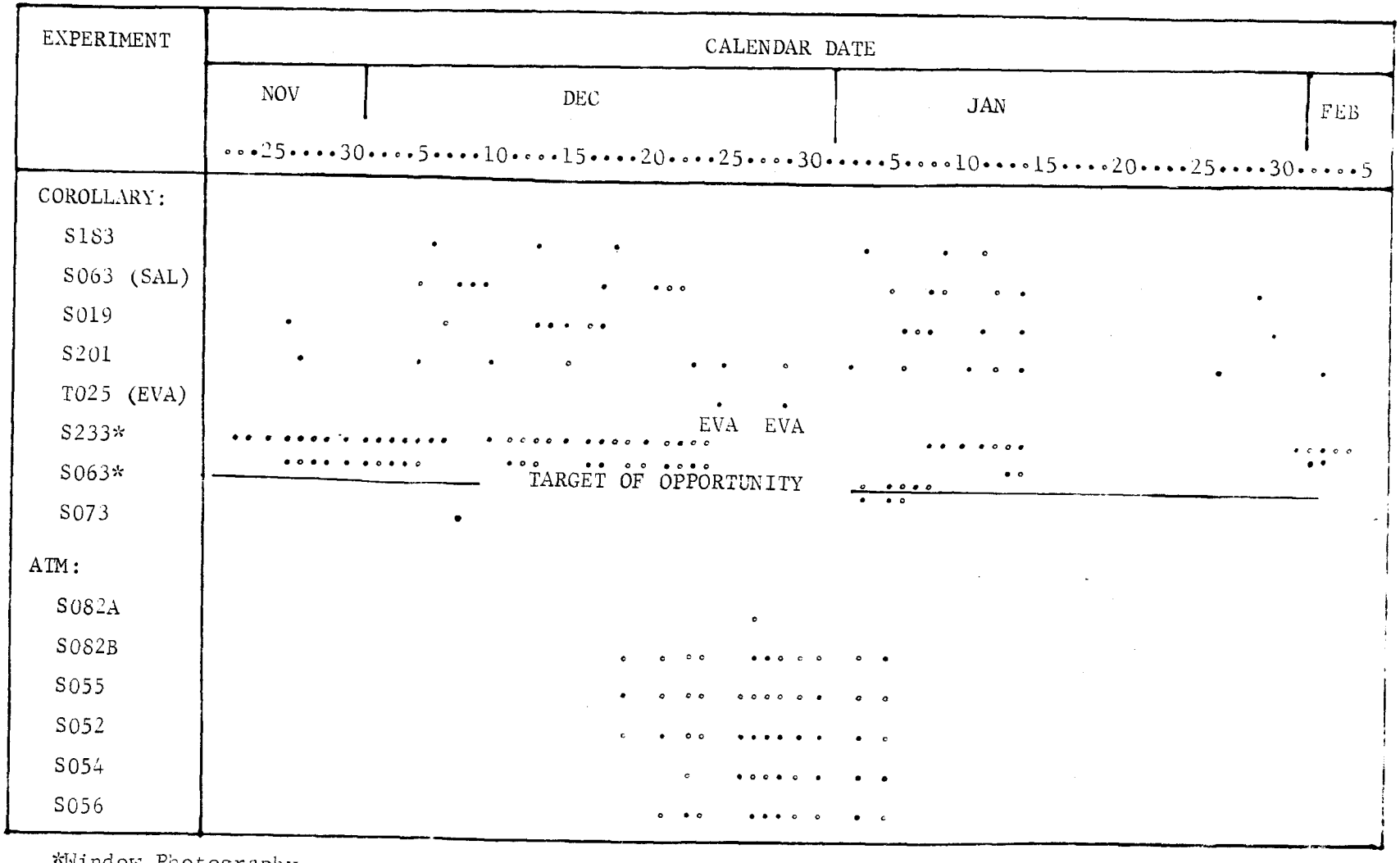

*Window Photography

FIGURE 1. KOHOUTEK VIEWING PROGRAM
(ACTUAL OBSERVATIONS)

SECTION III. PREMISSION EXPERIMENT SELECTION

Realizing the unique opportunity to observe a new comet from above the atmosphere, the Skylab Program Director requested the MSFC and Lyndon B. Johnson Space Center (JSC) to perform a compatibility assessment for conducting an observing program of the comet on SL-4, using existing instruments in orbit or with other instruments that could be available in time to be carried to Skylab by the SL-4 crew.

The comet's position relative to the Sun would be constantly changing (see figure 2 for comet orbit and Appendix D for detailed orbital parameters). Therefore a compatibility assessment would need to determine the Skylab instruments' capabilities for observing the comet at different angles from the sun, at different brightness levels and with differing available exposure times. Then the capability of the vehicle and crew to utilize those instruments in the required time frames would have to be determined. Finally an assessment of the Command Module (CM) logistics capability to carry up new instruments, filters, films, etc. would be investigated. The following paragraphs describe the major constraints and tradeoffs, and discuss the general conclusions of the assessments.

A. Existing Experiment Hardware

All the Skylab instruments capable of recording images or electromagnetic spectra were used to make comet observations, except for the earth resources experiment package (EREP) instruments and some handheld cameras. The EREP imaging cameras' bandpasses covered white light and near infrared portions of the spectrum, but at a lower resolution than recorded by ground observatories. The electronic detectors were also limited in sensitivity and resolution for this application. In addition, the EREP hardware was mounted on the anti-solar side of the vehicle and using it would have required maneuvering the vehicle almost 180 degrees and would have put the vehicle in an undesirable orientation. In view of these considerations, the EREP instruments were not used to observe the comet.

There were five instruments designed to be operated through the Scientific Airlocks (SAL) that were capable of taking scientific data on the comet: S019, S063, S073, S183, and T025. However, only the anti-solar SAL was available for use; the Solar SAL was blocked by the parasol. Therefore the direction of sight by these instruments had to be changed up to 180 degrees, depending upon the location of the comet. The S019 Articulated Mirror System (AMS) was used to acquire a 90 degree angle. Rolling of the vehicle about the longitudinal axis accomplished the remainder of the line-of-sight change.

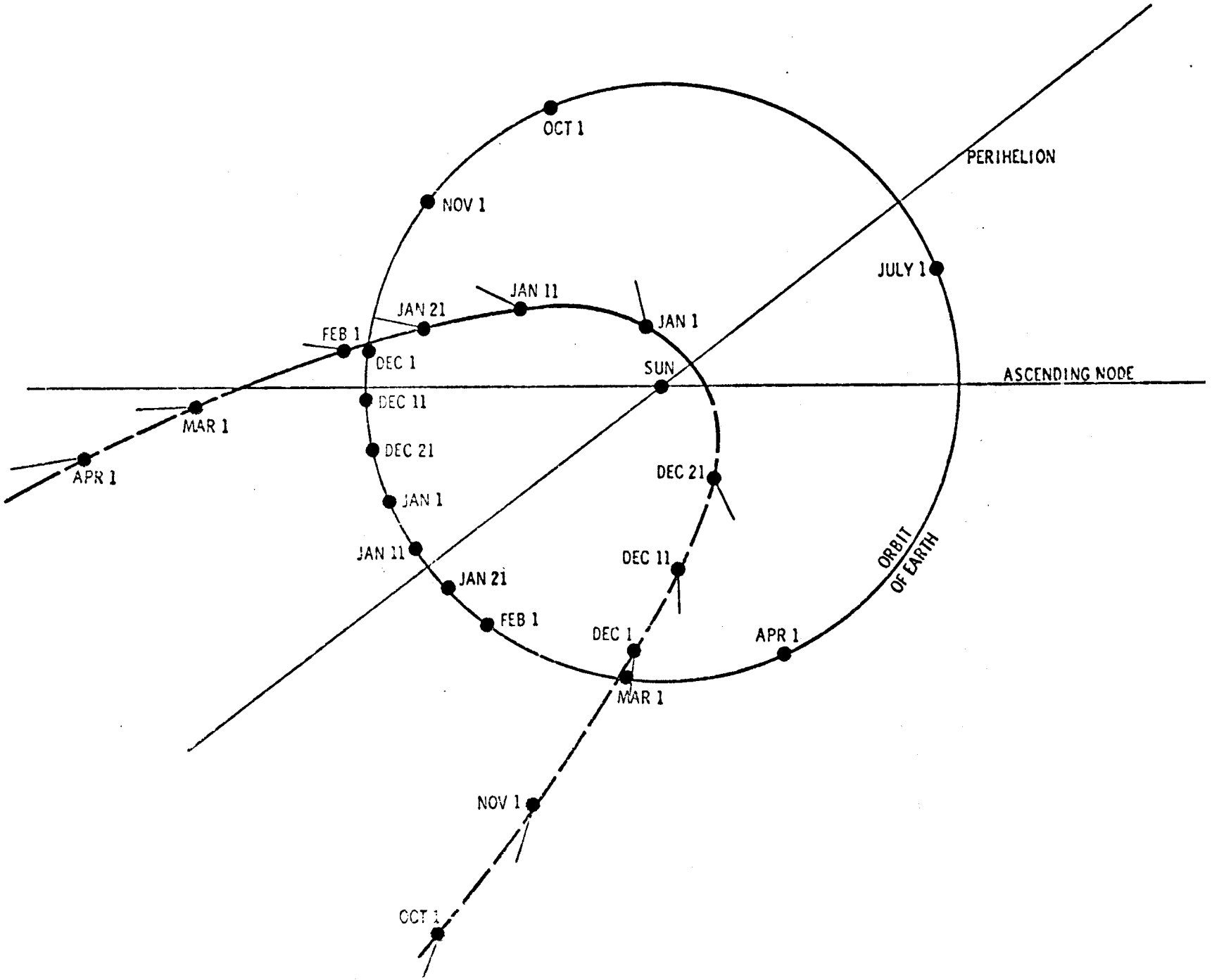

FIGURE 2. COMET ORBIT

The instrument characteristics are shown in table II. The scientific objectives were established, based on the instruments' known characteristics and the observation opportunities, as shown in table III.

ATM use for comet observation required maneuvering the vehicle to point the instrument at the comet instead of at the sun. The ATM instruments were assessed to determine their potential usefulness to observe the comet. The instrument's characteristics are shown in table IV and their primary scientific objectives are shown in table V.

B. New Experiment Hardware

S201, Far UV Electronographic Camera, developed for and flown on the Apollo Program, was flown on SL-4 to measure the size and growth of the hydrogen halo and the atomic oxygen distribution.

S233, Kohoutek Photometric Photography, was selected to obtain a series of visible light handheld photographs suitable for photometry and to provide a synoptic history of the comet.

TABLE II. CHARACTERISTICS OF COROLLARY EXPERIMENTS AVAILABLE FOR COMET VIEWING

EXPERIMENT	WAVELENGTH (Å)	SPECTRAL RESOLUTION (Å)	FIELD-OF-VIEW (degrees)	SPATIAL RESOLUTION (arc-min.)	DATA FORMAT
S019 UV Stellar Astronomy	1300-5000	2 at 1500 9 at 2000	4 by 5	0.25	Film
S063 UV Airglow Horizon Photography	2500 3090 3914 5577 6300	- - - -	7 by 9	0.50	Film
S073 Gegenschein/ Zodiacal Light	White Light	-	7 by 9	0.50	Film
S183 Ultraviolet Panorama	1878 2970 2560	635 635 360	7 by 9 7 by 9 8	7 7 1	Plate Plate Film
S201 Far UV Electronographic Camera	1050-1600 1230-1600	- - -	7 by 9 20 (EVA)	4	Film
S233 Kohoutek Photometric Photography	White Light	-	43 (diagonals)	0.50	Film
T025 Coronagraph Contamination Experiment	2530 2800 3100 3250 3361 3600 3873 3940 4262 4430 4700 4900 5500 5890 6000	115 200 60 60 30 200 30 30 20 100 60 60 200 30 Shortpass	24	0.50 0.33	Film

TABLE III. COMETARY SCIENCE OBJECTIVES OF COROLLARY EXPERIMENTS

EXPERIMENT	SCIENTIFIC OBJECTIVES
S019 UV Stellar Astronomy	Ultraviolet objective prism imaging of the coma and tail. Ultraviolet emission spectra of knots and transient structures and plasma tail filaments. Cometary absorption spectra of coma employing stellar occultation.
S063 UV Airglow Horizon Photography	Ultraviolet-visible polarimetry and bandpass photography of coma and tail. Temporal variation of emission isophotes of O(I), C_2, C_3 and OH. Degree of linear polarization of the coma and tail. Polarimetry.
S073 Gegenschein/Zodiacal Light	Particle distribution of debris in comet plane.
S183 Ultraviolet Panorama	Ultraviolet broad bandpass photographic photometry of coma and tail. Production rates, spatial distribution, and life times of OH in coma. Tri-color index of tail and coma.
S201 Far UV Electronographic Camera	Extreme UV dual bandpass photography. Obtain H Lyman-alpha imagery showing development of hydrogen halo. Determine atomic oxygen distribution.
S233 Kohoutek Photometric Photography	Visible light photography for photometric and synoptic history of comet.
T025 Coronagraph Contamination Measurements	Ultraviolet and visible bandpass photography and polarimetry of coma and tail near perihelion. Particulate production and distribution. Production and distribution of OH, CN, C_2, NH, Na, CO+. Polarimetry of coma and tail. Spectral and spatial changes of comet near perihelion.

TABLE IV. ATM EXPERIMENT CHARACTERISTICS FOR KOHOUTEK

EXPERIMENT	WAVELENGTH (Å)	SPECTRAL RESOLUTION (Å)	FIELD-OF-VIEW (degrees)	SPATIAL RESOLUTION (arc-sec)	DATA FORMAT
S052 White Light Coronagraph (Auxil. Eq. - Video FOV 4.5 solar diams, spatial resolution-30 sec)	3500-7000	-	6 solar diam. (~3.2°)	8	Film
S054 X-Ray Spectrographic Telescope	3.0 - 60	$\frac{\lambda}{\Delta\lambda} = 30$ at 7 Å	48 min	3	Film + TV
S055 UV Scanning Polychromator Spectroheliometer	296-1350	1.4	5 min	5	Telemetry
S056 XUV and X-Ray Telescope	2-33	- 2.5	40 min	2.5	Film Telemetry
S082A XUV Spectroheliograph	150-335 321-625	.13 .13 (for 10" imagery)	56 min	5	Film
S082B Ultraviolet Spectrography (Auxil. Eq. - Video 170-550Å; 20 sec)	970-1970 1940-3940	.08 .16	2 by 60 sec	3	Film

TABLE V. COMETARY SCIENCE OBJECTIVES OF ATM

EXPERIMENT	SCIENTIFIC OBJECTIVES
S052 White Light Coronagraph	Visible photographic polarimetry of coma and tail at perihelion. Polarization and morphological changes of coma and tail. Measurement of solar wind at comet.
S054 X-ray Spectrographic Telescope	X-ray absorption of tail to determine total mass density. X-ray fluorescence for imagery of coma. Determine possible concentrations of Si, Al, Mg, O, and C.
S055 UV Scanning Polychromator - Spectroheliometer	Extreme ultraviolet spectral observations of coma. High resolution UV maps of inner coma near perihelion. Spectral scans of C, N, Si, H_2. H Lyman-alpha scans to correlate with S201.
S056 XUV and X-ray Telescope	X-ray fluorescence for imagery of coma.
S082A XUV Spectroheliograph	Extreme ultraviolet monochromatic imagery. Possible images of He(I), He^+, O^+
S082B Ultraviolet Spectrography	Ultraviolet spectral observation of coma and tail. H Lyman-alpha profile and intensity. Spectral intensities. Search of metallic, diatomic, polyatomic emission lines (H, D, C, Mg, Al, H_2, OH, SO_2).

SECTION IV. VIEWING CONSTRAINTS

Each instrument had special viewing requirements and constraints. Many instruments had some constraints in common. This section discusses the general mission constraints that were dictated by the comet trajectory and vehicle configuration which each group of comet observing instruments (ATM, SAL, EVA, handheld) had to conform. More details on special considerations for each instrument are included in Section VI.

A. Comet Brightness

Once the comet brightness reached about 6th magnitude it was calculated that the S183, S201 and S019 would be able to detect the comet. After that time it would be possible to view the comet from Skylab within the constraints of crew, instrument and vehicle capabilities until the comet magnitude dropped below about 6th magnitude. The July brightness predictions, much higher than actual, indicated Skylab observations might be possible from early November through February. Figure 3 illustrates premission estimates of comet magnitude vs. time as supplied by Smithsonian Astrophysical Laboratory. The upper curve was based on calculations modeled after Comet Bennett, 1970II. The lower curve was modeled after Comet Arend-Roland, 1957III. The points are actual data points received at the Kohoutek Console at Mission Control Center, JSC during the SL-4 mission.

Figure 4 depicts a curve of predicted Comet Kohoutek tail length vs. time based on a model of Comet Arend-Roland, 1957III, supplied by Smithsonian.

B. Scientific Airlock Constraints

1. <u>SAL Availability</u>. All but one comet observation through the SAL were accomplished with four instruments: S019, S063, S183, and S201. On one occasion the S073 photographed the edge-on view of the comet plane. Only one instrument could use the SAL at any given time. If one of the four instruments was installed, comet observations might not be possible since they were sometimes scheduled for other uses.

2. <u>Crew Availability</u>. The crew normally kept the same work and sleep schedules. The instruments had no remote operation capabilities. Crew activities were planned in advance to ensure Kohoutek Observations.

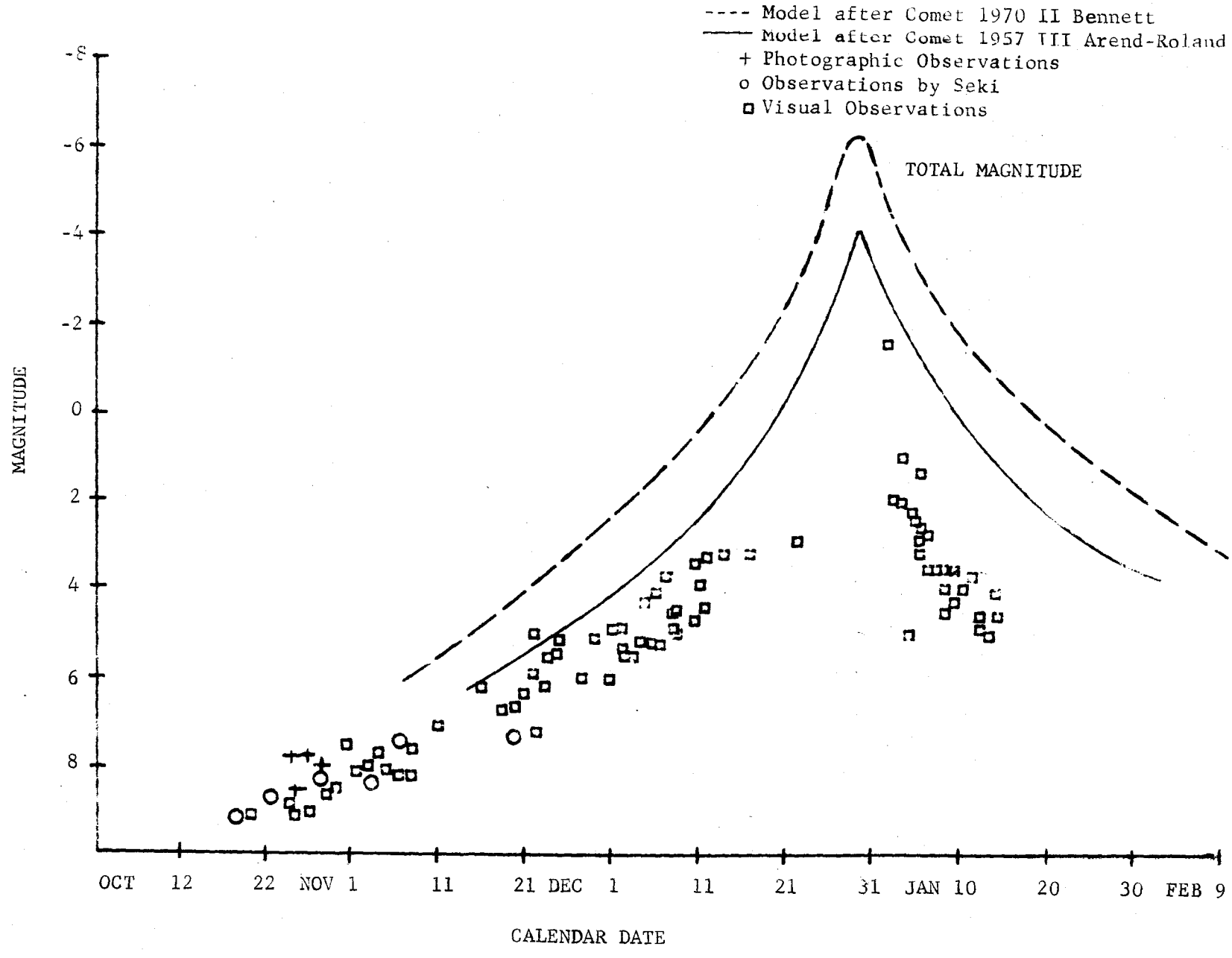

FIGURE 3. COMET BRIGHTNESS

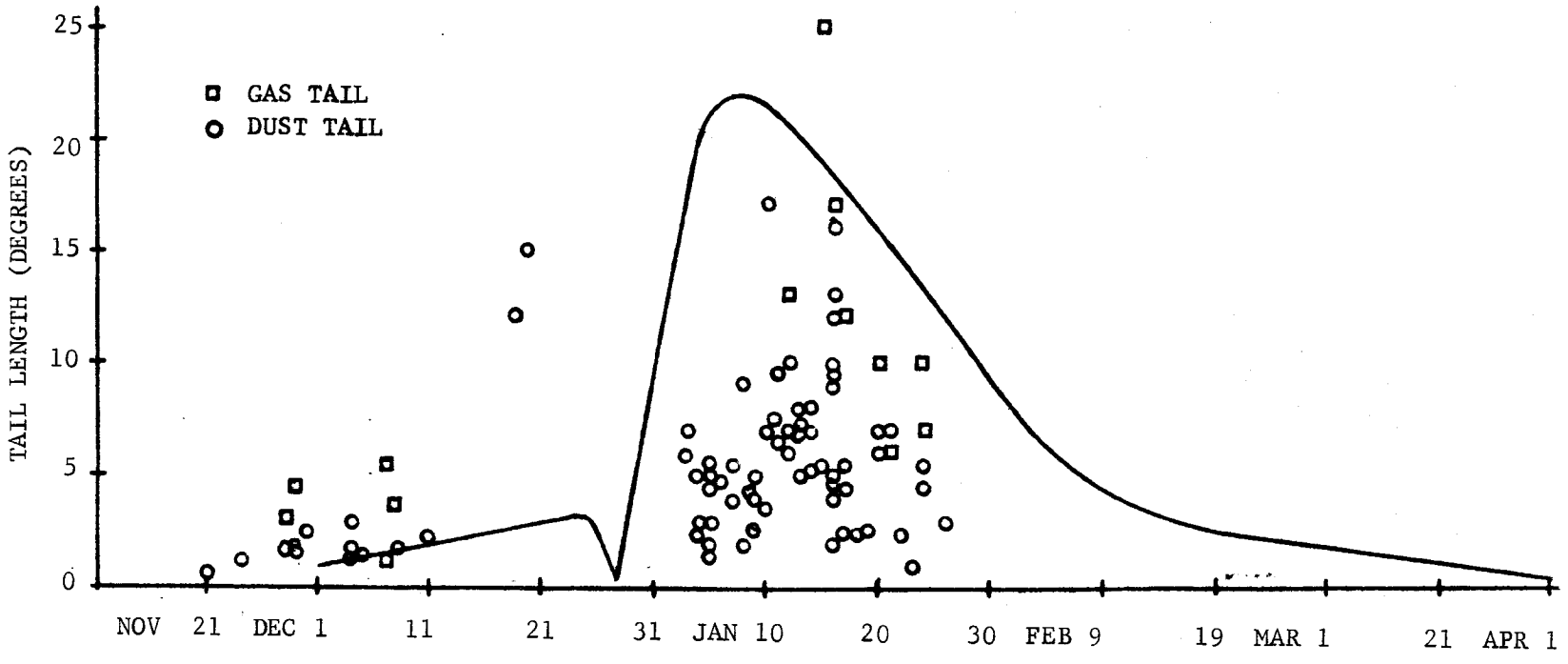

FIGURE 4. COMET TAIL LENGTH

3. Predawn, Postsunset Constraint. The S019 AMS was designed to aid in taking stellar photographs during the night time portion of the orbit and did not have the non-reflective baffling required for comet observations in full sunlight. Comet viewing through the SAL was therefore constrained to periods when the comet was in sight but the sun was occulted by the earth. These opportunities occurred prior to sunrise each orbit, while the comet was approaching the sun. The viewing time available on a temporal basis is shown in figure 5. When the angle between the comet and sun as seen from the earth was less than about 10 degrees the duration of the viewing opportunity was too short to allow comet data taking through the SAL.

C. ATM Viewing Constraints

It was intuitive early in the compatibility studies that the ATM would be most useful when the comet was near the sun since the ATM was designed to view the sun. The comet would be brightest when it passed nearest the sun. Thermal, power and control moment gyro (CMG) constraints, each and collectively, precluded constant viewing on numerous successive orbits, except when the comet was very near the sun. Fortunately, due to the instruments sensitivity limitations, assessment revealed that the vehicle was capable of performing an appropriate amount of comet observations using the ATM during the preperihelion and postperihelion phases of the comet pass. The vehicle impacts of using the ATM to observe the comet when it was near the sun (_10 degrees) were negligibly small. Therefore, the amount of comet viewing with ATM in the preperihelion and postperihelion phases were dictated by scientific requirements. Near perihelion, where scientific interest was maximum and system impacts minimum, and amount of observation was dictated by crew availability and priority tradeoffs with other mission objectives.

D. EVA Constraints

The number of EVAs for the comet observations was limited to two opportunities, one preperihelion and one postperihelion. T025, designed for detecting particles around Skylab, could be effectively used during two days before and two days after the comet passed nearest the sun (minimum elongation angle, not perihelion). S201, specifically for comet viewing, could also be operated EVA on those same days by maneuvering the vehicle to occult the sun with the ATM solar arrays.

E. Handheld Viewing Constraints

One of the onboard Nikon Cameras was dedicated to Experiment S233 for taking daily photographic measurements of the comet brightness. This camera and occasionally the S063 camera were used to photograph the comet through windows in the spacecraft. Observations were constrained to periods when the comet was within the field-of-view of a particular window and was not occulted by the ATM solar panels.

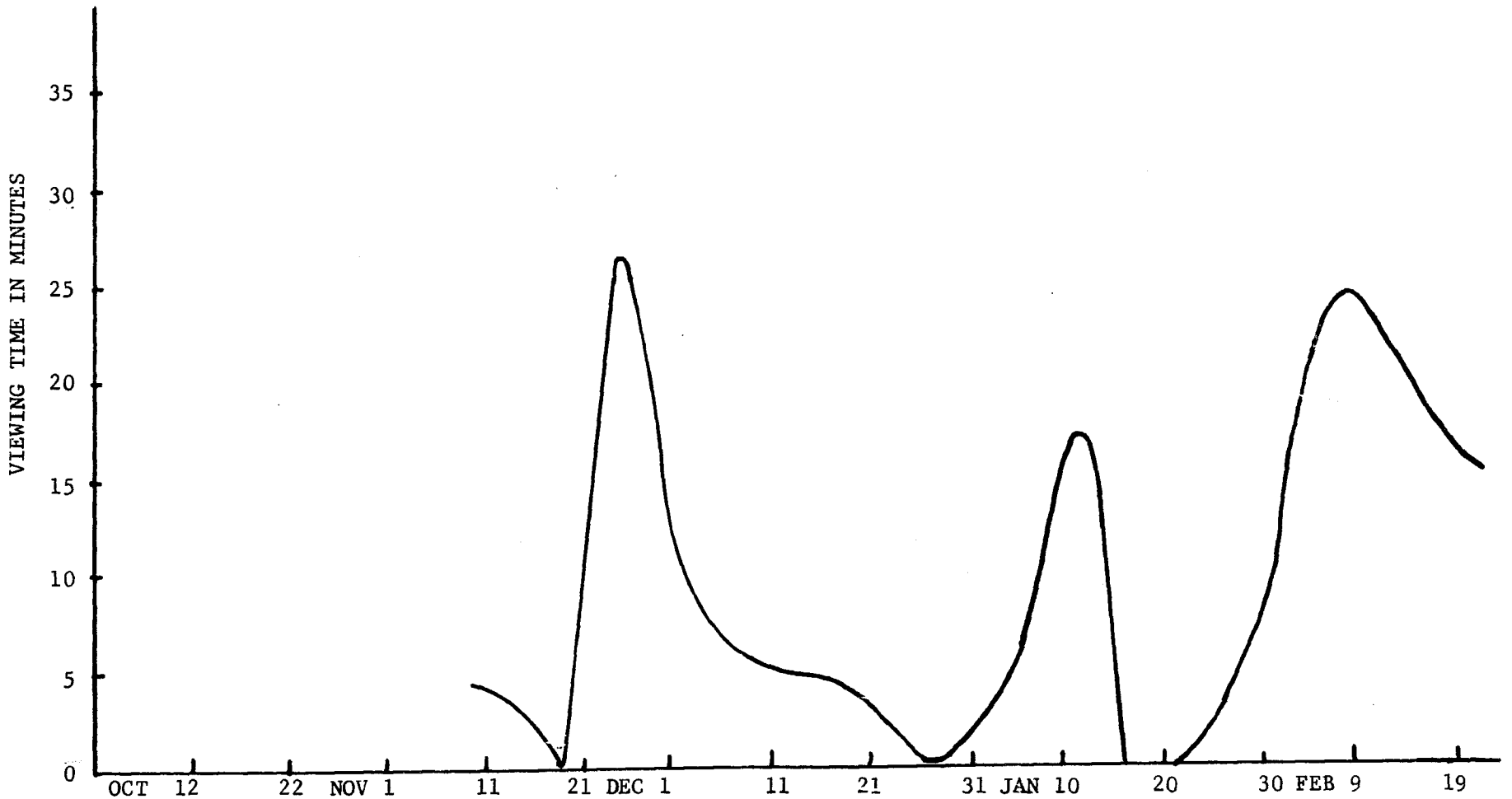

FIGURE 5. COMET VIEWING TIME WHILE IN EARTH'S SHADOW

SECTION V. VEHICLE MANEUVERING

The comet was in the general direction of the sun. The anti-solar SAL, normally pointed away from the sun, would have to be reoriented to allow instruments looking through this SAL to view the comet. By using the AMS, a 90 degree change in view angle was attained. Rolling the vehicle arounds its longitudinal axis by 60 to 90 degrees accomplished the remainder of the line-of-sight change.

For observations with the ATM experiments, attitude pointing control system (APCS) mode of accommodation and pointing capabilities were dependent on the angle between the comet and the center of the sun as seen from the ATM. When ATM pointing was within 0.4 degrees of sun center, the APCS was in the experiment pointing mode and the experiment pointing control system (EPCS) was used to fine-point the ATM experiment canister at the comet. Offset pointing the canister from the center of the sun was controlled by the Skylab crewman via the manual pointing controller, with offset pointing capability up to $\pm$ 0.4 degrees in either pitch (up/down) or yaw (right/left). Canister roll was controlled by the crewman, using the roll positioning mechanism (RPM).

When the comet was more than 0.4 degrees from sun center, the ATM experiment canister was caged and the cluster was maneuvered to point the ATM experiments at the comet. For these maneuvers the cluster was in APCS attitude hold CMG mode.

The required maneuvers depended on cluster attitude and comet location.

SECTION VI. EXPERIMENTS

This section discusses the objectives, concept, hardware description, experiment operations, constraints, hardware performance, experiment interfaces, return data and experiment anomalies of each experiment which viewed the comet.

A. S019 UV Stellar Astronomy

The Principal Investigator for experiment S019 is Dr. Karl G. Henize, Astronaut Office, at JSC, Houston, Texas. The telescope was built by Northwestern University, Evanston, Illinois and the mirror system was built by Boller and Chivens, Division of Perkin Elmer Corporation, Pasadena, California, under contract to JSC.

1. Experiment Description.

a. Objective. The scientific objectives were: to obtain ultraviolet emission spectra of small knots and transient structures, and plasma-tail filaments when their orientation was approximately perpendicular to the instrument dispersion direction; to obtain coma ultraviolet spectra through short exposures and to obtain ultraviolet absorption spectra at various points in the tail using stars as the background source.

b. Concept. The data from the objective-prism spectra of the comet in the ultraviolet wavelengths were to be studied to understand: the composition of the comet; the astrophysical processes which occurred in the comet as it interacted with the solar radiation and solar wind and the overall temporal evolution of the comet.

These data were to be provided through spectroscopic analysis to determine the number and type of molecules and radicals present, the state of electron excitation, the ionization and dissociation rates of the radicals. The S019 equipment had the capability of producing simultaneous polychromatic images of that comet region within the 4 by 5 degree spectrograph field-of-view. Spectral data were to be obtained in the region between 1800 and 2400 Å and over the continuous range from 1300 to 5000 Å where molecular emission lines were to be sought to determine the parent molecules and hence the comet nucleus compositions.

c. Hardware Description. The telescope optical system was an f/3, six-inch aperture Ritchey-Chretien design (see figure 6) that used a chromatically-corrected, lithium fluoride and calcium

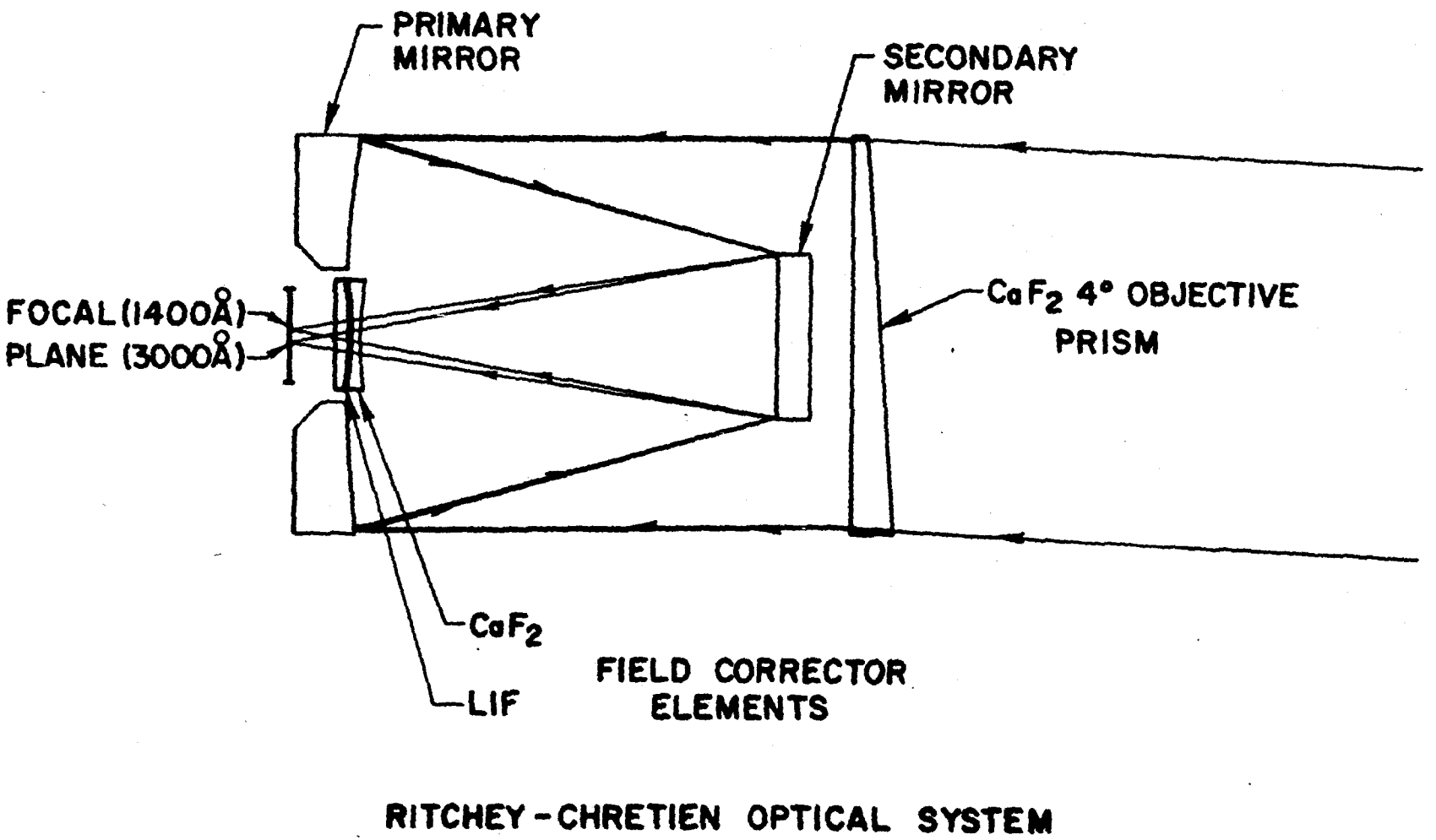

FIGURE 6. S019 TELESCOPE OPTICAL SYSTEM

fluoride doublet as a field flattener. The four-degree objective prism was cut from a single-crystal calcium fluoride ingot. The field was four degrees by five degrees on a side and all stars of sufficient brightness within that field had their spectra recorded on each exposure.

A telescope cutaway view is shown in figure 7. The film magazine contained 164 frames of Kodak 101-06 emulsion mounted on metal plattens.

The instrument operated through the Orbital Workshop (OWS) anti-solar SAL. Since the spacecraft was not readily maneuverable, an AMS was first extended through the SAL to allow quick pointing to any area within a 30° band around the sky. All instrument functions were manually controlled.

The AMS (see figure 8) contained an extensible reflective surface with 360 degree rotation and 15 degree tilt capability from its zero position. This tilt resulted in a 30-degree viewing angle capability (see figure 9).

It incorporated a front sealing surface to interface with the SAL and a rear sealing surface to interface with the optical canister.

The mirror was a 7.5 by 15 inch, flat, elliptically shaped device. The reflective surface was a 1000 Å thick aluminum coating with a 250 Å thick magnetic fluoride overcoating. The mirror was not to deviate from a plane surface by more than a one-fourth wavelength of 5500 Å light.

The unit had a spectral widening drive mechanism which used a manually-wound spring motor. The mechanism total travel was 270 arc-seconds. The exposure times were 30, 90, and 270 seconds.

The AMS displayed accuracy was ± 0.05 degree.

2. Experiment Operations. The mode used for comet viewing, was similar in most respects to normal S019 operation. A cluster roll maneuver up to 90 degrees about the longitudinal-axis was required to view the comet. The comet viewing mode was combined with a normal S019 pass. Eighteen comet exposures were taken during fourteen experiment sessions, which are shown in table VI.

3. Constraints. The experiment constraints were successfully met during the mission.

4. Hardware Performance. Hardware performance is covered in reference [1].

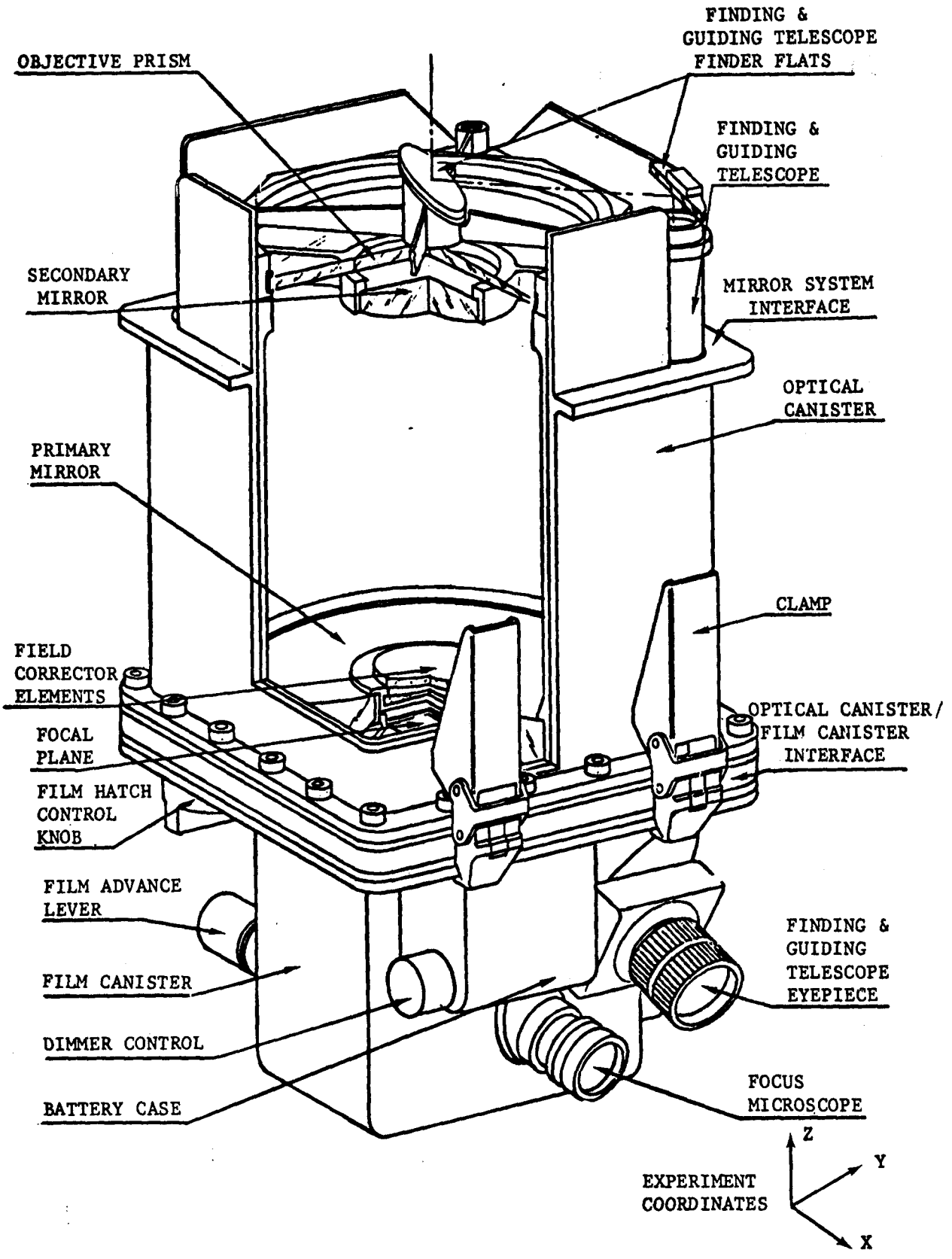

FIGURE 7. OPTICAL CANISTER WITH FILM CANISTER INSTALLED

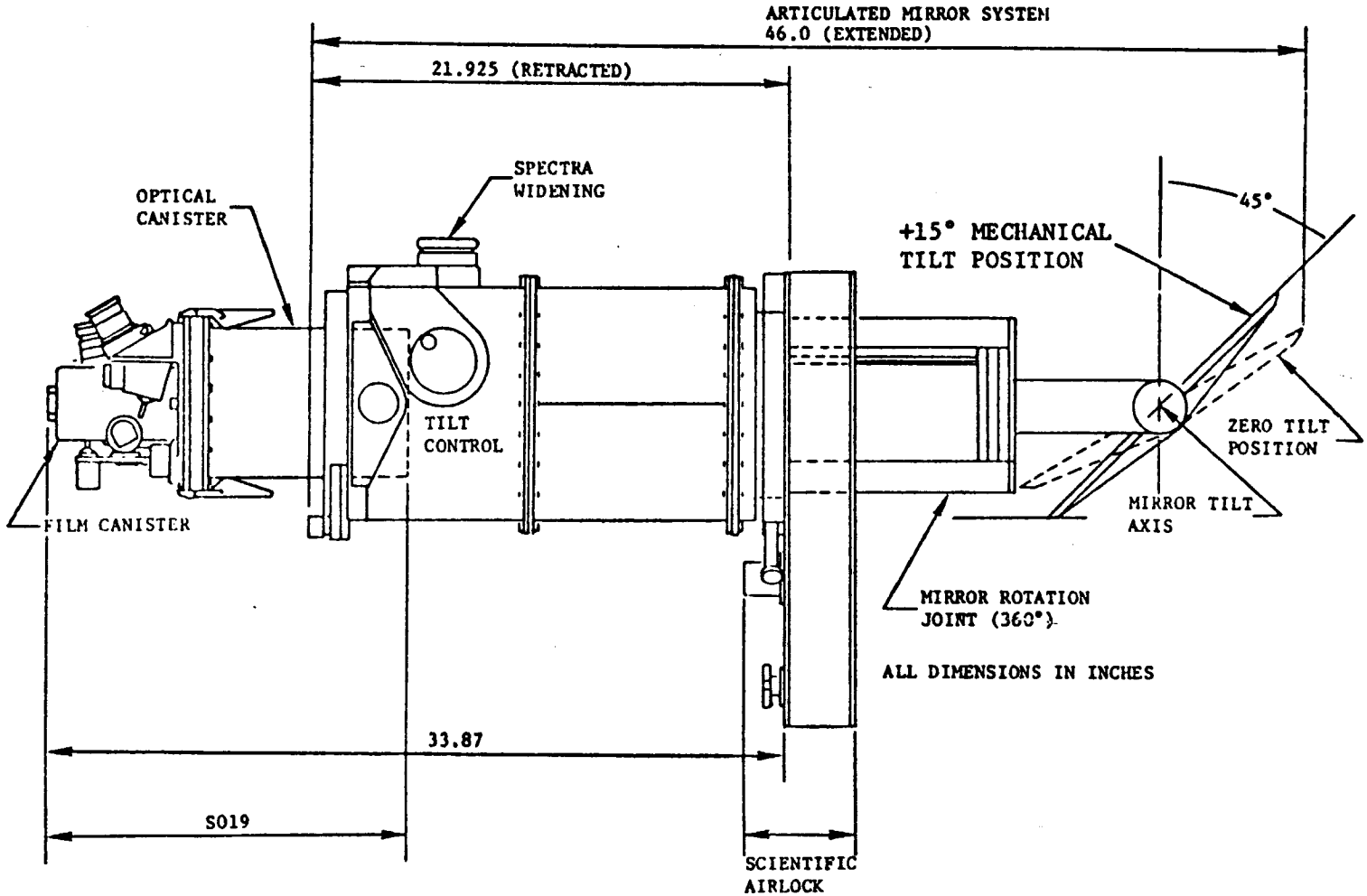

FIGURE 8. ARTICULATED MIRROR OPERATING CONFIGURATION

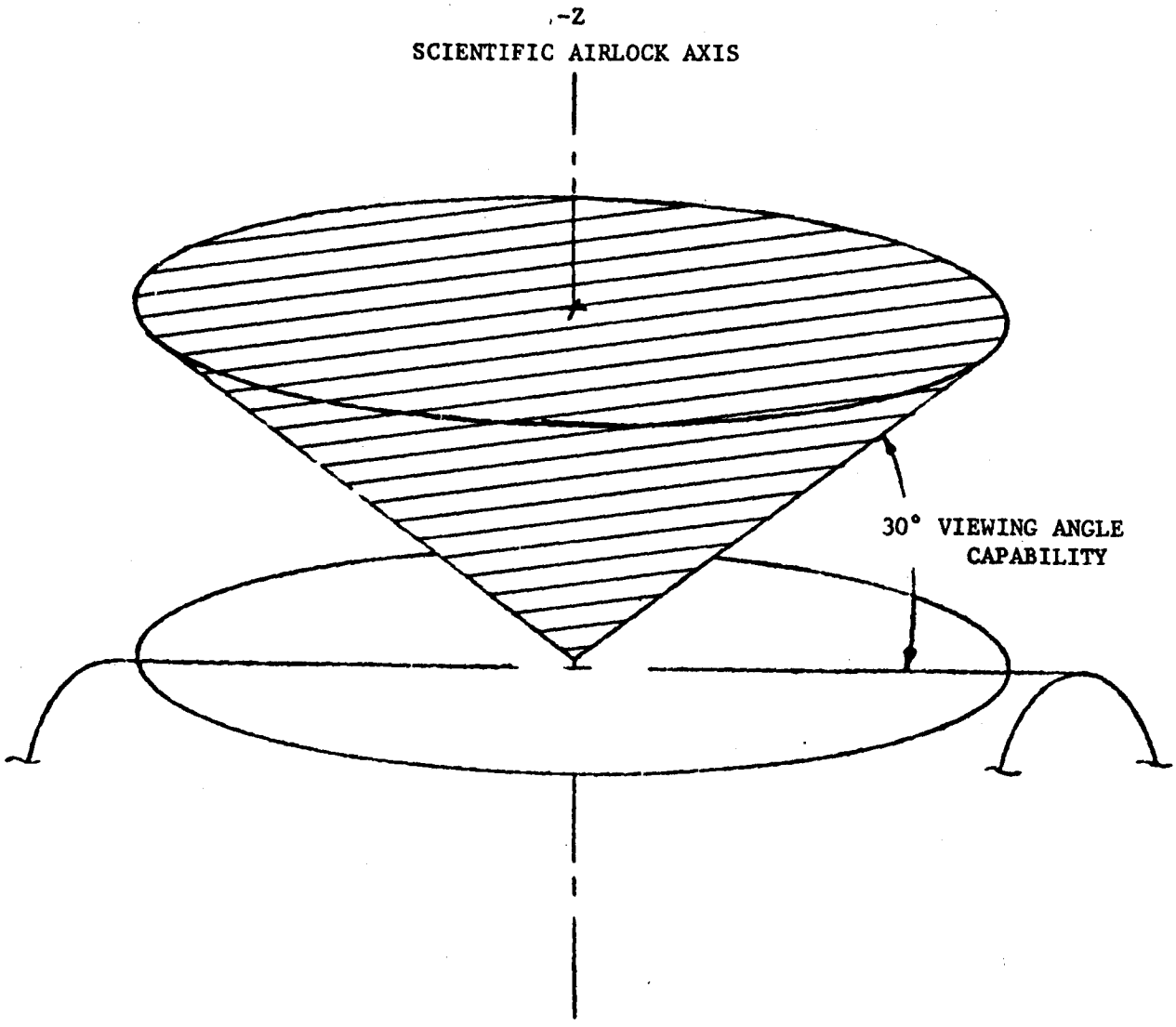

FIGURE 9. AMS VIEWING CAPABILITY

TABLE VI. S019 OPERATIONAL SUMMARY

PERFOR-MANCE	GMT CALENDAR DATE	MD/DOY	CANISTER/ FRAME	MIRROR ANGLES		PLANNED TIMES		ACTUAL TIMES		SUNRISE	REMARKS
				ROTATION	TILT	START	DURATION (SEC)	START	DURATION (SEC)		
1	11/25/73	10/329	3/(007)	205.2°	22.1°	22:36:00	900 SEC	22:40:55	604 SEC	22:51:00	PLT EXPOSED ONE ADDITIONAL FRAME. CDR REPORTED VERY THIN WHITE STREAKS NEAR EDGE OF MIRROR & SMUDGE ~ 3/4 INCH LONG IN FROM EDGE ~ 3/16 INCH PRIOR TO DATA TAKE.
2	12/7/73	22/341	3/032	213.9°	22.7°	23:51:00	300 SEC	23:51:03	300 SEC	23:56	PAD STATED 214.9° ROTATION, SINCE NUZ WAS -1.0 IT WAS NOT UPDATED, SO THE PLT SET ROTATION TO 213.9° COMET DESCRIBED IN MIRROR WITH HEAD IN UPPER LEFT, TAIL IN LOWER RIGHT
3	12/13	28/347	2/015	195.5°	22.1°	15:03:40	240 SEC	15:01:30	253 SEC	15:08	EXPOSURE STARTED TWO MINUTES EARLY; COMMENTARY SAYS IT STARTED AT 15:02:30, BUT REREAD OF TRANSCRIPT PROVES START ~ 15:01:30, I.E., COMET DIDN'T COME INTO FOV UNTIL OVER TWO MINUTES AFTER START, AND STOPPED AT 15:05:43.
4	12/14	29/348	2/019	201.6°	18.8°	15:55:49	180 SEC	15:55:49	182 SEC	16:00	COMET LOCATION AT APPROXIMATELY 0.4 RADIUS A 5:30 O'CLOCK, TAIL POINTING OUT FROM CENTER IN 5:30 DIRECTION
			2/020				30 SEC	15:59:01	30 SEC		
5	12/16	31/350	2/022	204.2°	22.8°	22:20:09	270 SEC	22:20:09	225 SEC	22:24	COMET LOCATION HALFWAY BETWEEN LEFT HAND CROSSHAIR AND CENTER CROSSHAIR AT 9 O'CLOCK. PAD CALLED FOR WIDENED EXPOSURES BUT IT WAS LEFT UNWIDENED.
6	12/17	31/351	2/023	204.5°	21.8°	03:00:00	270 SEC	03:00:35	203 SEC	03:04	CC POINTED OUT 2° OFFSET LOOKING THROUGH VIEWFINDER FROM THE TARGET LINE THROUGH PRISM, AS REASON FOR SETTING COMET ON LEFT HAND VERTICAL CROSSHAIR.
7	12/19	34/353	2/033	208.4°	22.0°	23:24:40	230 SEC	23:24:40	230 SEC	23:28:40	FRAME 34 INADVERTANTLY EXPOSED
8	12/24	38/358	NONE	215.6°	21.5°	01:23:00	120	-	-	01:24:54	ON CANISTER 2A SHUTTER/SLIDE RETRACT PROBLEM OCCURRED PRIOR TO AND PRECLUDED COMET PHOTOGRAPHY.
9	1/5/74	50/5	3/71	249.9°	21.1°	00:19:-	270 SEC	00:19:02	270 SEC	N/A	ROTATION 3.87 TURNS CCW, SO THAT ROT. READS XX9.9. FOR POST PERIHELION, EXPOSURES WERE ALWAYS STARTED AFTER SUNSET.
10	1/7/74	53/7	3/81	250.6°	21.3°	23:49:00	400 SEC	23:49:02	400 SEC	N/A	ROTATION 3.8 TURNS CCW, SO THAT ROT. READS XX0.6°.
			3/85				100 SEC	(23:58:19)	100 SEC		VOICED COMMENTS CHANGED ROT AND TILT ON PAD. COMET AT 9 O'CLOCK JUST OUTSIDE LEFT VERTICAL LINE; VENUS AT 7:30 O'CLOCK AT EDGE OF FOV; JUPITER AT 2:00 O'CLOCK. FRAMES 82, 83, 84 LOST DUE TO SLIDE RETRACT PROBLEM AT THE CONCLUSION OF 400 SEC EXP.

TABLE VI. S019 OPERATIONAL SUMMARY (CONCLUDED)

PERFOR-MANCE	GMT CALENDAR DATE	MD/DOY	CANISTER/ FRAME	MIRROR ANGLES		PLANNED TIMES		ACTUAL TIMES		REMARKS
				ROTATION	TILT	START	DURATION (SEC)	START	DURATION (SEC)	
11	1/8/74	54/8	3/88	251.0°	21.5°	12:15:00	500 SEC	12:15:00	500 SEC	ROTATION 3.8 TURNS CCW, SO THAT ROT. READS XX1.0°.
			3/(89)				70 SEC	12:23:30	39 SEC	COMET IN LEFT OF CENTER IN FOV.
12	1/12/74	57/12	3/	256.3°	21.6°	01:48	720 SEC	01:47:58	720 SEC	ROTATION 3.6 TURNS CCW, SO THAT ROT. READS XX6.3°.
							120 SEC			DID NOT PERFORM 120 SEC EXP, DUE TO PROBLEM WITH SLIDE RETRACT. COMET DIM, PLT THOUGHT HE SAW IT IN LEFT SIDE OF FOV.
13	1/14/74	60/14	2/104	265.6°	23.3°	20:48:00	540 SEC	20:48:00	540 SEC	ROTATION 3.3 TURNS CCW, SO THAT ROT. READS XX5.6°
				263.5 REPOSI-TIONED	22.4 REPOSI-TIONED					COMET APPEARED PARTIALLY OUT OF THE BOX AT 6 O'CLOCK AND WAS REPOSITIONED AT 20:49:40 TO BE ON THE LEFT CENTERLINE. COMET DIMMER, TAIL TOWARD 11 O'CLOCK, COMA READILY SEEN, BUT LOOKED LIKE STAR. STAR IDENTIFIED WITHIN 2° OF COMET MOST LIKELY θ AQUARIUS, BRIGHTER THAN COMET, MAGN 4.3.
14	1/30/74	76/30	2/113	20.3°	26.1°	23:50	390 SEC	23:50:00	390 SEC	ROTATION 0.8 TURNS CW FROM ROT 358.9° SO THAT ROT. READS XX0.3° CDR COULD NOT SEE COMET THROUGH EYEPIECE

( ) = BEST ESTIMATE FROM TRANSCRIPTS OR PADS

5. Experiment Interfaces. Crew/experiment interfaces are discussed in reference [1]. The other experiment interfaces performed satisfactorily.

6. Return Data. Film Canisters 002 and 003 were returned for evaluation.

7. Anomalies. The Principal Investigator (PI) reported preliminary results at the crew debriefing on March 4, 1974. The last three performances with cassette 002 did not yield any useable data due to an S019 shutter/slide retract problem.

B. S063 UV Airglow Horizon Photography

The Principal Investigator for Experiment S063 is Dr. Donald M. Packer, Naval Research Laboratory, Washington, D.C. The hardware developer was Martin Marietta Aerospace, Denver, Colorado, under contract to JSC.

1. Experiment Description

a. Objectives. The scientific objectives were: to obtain ultraviolet and visible monochromatic emission isophotes of O(I), C_2, C_3 and OH; to obtain photographic polarimetry of the coma and tail and to obtain color photography of the comet.

b. Concept. The OH (3090 Å) photography was to be correlated with other Skylab experiments to determine the ratio of H to OH to establish water's presence. The photography of O(I), C_2, C_3 and OH emission would allow a determination of these constituents' production rates. The study was to provide data on interaction of the coma and tail with the solar wind and solar radiation. The S063 equipment had a capability for selected bandpass photography, such as the addition of an OH (3090 Å) filter.

The data was to be studied to understand the spatial and temporal variation of the selected atomic and molecular constituents and to obtain the degree of linear polarization of the coma and tail.

c. Hardware Description. Experiment S063 used an operational Nikon camera, the T025 canister without the occulting disks, the S063 mounting adapter, the T025 filters and the S019 AMS. The camera had interchangeable lenses, which included an f/1.2 aperture, 55mm focal length visible lens; an f/2.8 aperture, 135mm focal length visible lens; and an f/2 aperture, 55mm focal length ultraviolet lens. The T025 filters mounted in an adapter for quick interchangeability. Nikon Cameras also were interchangeable.

2. Experiment Operations. The anti-solar SAL desired observational procedure was to mount the experiment hardware to the

anti-solar SAL and roll the cluster as required up to 90° about the longitudinal axis.

The handheld photography mode was performed with the 55mm visible lens only, as the windows available were glass, coated to exclude UV transmittance. However, this field-of-view was greater than the anti-solar SAL's, so that the entire comet could be included in a photograph. S063 photographed the comet on twenty-two occasions, fourteen sessions thru the SAL and eight handheld sessions. The former technique was used for eighty exposures, the latter for fifty exposures. A summary of S063 operations is included in table VII.

3. Constraints. All S063 constraints were satisfied during comet viewing.

4. Hardware Performance. Hardware performance is covered in reference [1].

5. Experiment Interfaces. All experiment interfaces performed satisfactorily.

6. Return Data. S063 cassettes BE08, BV26, BE09, BV27, BV28 CI113, and BE11 were returned for evaluation.

7. Anomalies. The exposures taken with camera NK02 were out of focus. The NK02 camera anomaly is discussed in reference [1]. The PI reports the last three experiment sessions (20 exposures) did not yield any useful data due to a pointing problem.

C. S073 Gegenschein/Zodiacal Light

The Principal Investigator for Experiment S073 is Dr. J. Weinberg, the State University of New York at Albany, Albany, New York.

1. Experiment Description

a. Objectives. The objective was to obtain particulate distribution data in the region of the comet's path.

b. Concept. S073 was to photograph the cometary debris when the Skylab vehicle passed through the comet's plane, on December 10, 1973. The hope was that this experiment, which studied low brightness sources, would enable an estimation of the comet particle distribution.

c. Hardware Description. Experiment S073 used a 35mm Nikon Camera, the T025 canister, the S063 mounting adapter, and the S019 AMS mounted to the anti-solar SAL. The camera contained Kodak 2485 high speed black-and-white film.

TABLE VII. S063 OPERATIONAL SUMMARY

PERFOR-MANCE	GMT CALENDAR DATE	MD/DOY	CAMERA	CASSETTE	LENS (MM)	SHUTTER SPEED	F/STOP	T025 FILTER PLANNED	T025 FILTER ACTUAL	NO. OF FRAMES	PLANNED TIMES START	PLANNED TIMES EXPOSURE (SEC)	ACTUAL TIMES START	ACTUAL TIMES EXPOSURE (SEC)	MIRROR ANGLES ROTATION	MIRROR ANGLES TILT	REMARKS
1	12/6/73	20/340	NK02	BE08	55-UV	T	2.0	A3	NONE	01	02:46:25	30	02:46:25	30	213.3	21.7	ONE EXTRA EXPO-SURE INADVER-TENTLY OBTAINED W/O FILTER ON EXP 01; 02 THRU 06 SATISFY INTENT OF PAD
								A3	A3	02	02:47:10	5	02:47:05	30			
								C3	A3	03	02:48:00	90	02:47:39	5			
								C3	C3	04	02:49:45	20	02:48:00	90			
								B1	C3	05	02:50:50	90	02:49:40	20			
									B1	06			02:50:51	90			
2	12/8/73	23/342	NK02	BE08	135-VIS	T	2.8	A1		1	18:29:45	270	18:29:45	270	215.7°	24.0°	
								A1		2	18:34:25	30	18:34:26	30			
								A1		3	18:35:10	5	18:35:11	5			
3	12/9/73	24/343	NK02	BE08	135-VIS	T	2.8	A1		1	20:54:50	270	20:54:50	270	217.8°	24.9°	
								A1		2	20:59:30	30	20:59:29	30			
								A1		3	21:00:10	5	21:00:10	5			
4	12/10/73	25/344	NK04	BE08	135-VIS	T	2.8	A1	A1	1	17:06:55	270	17:06:55	270	222.6°	25.2°	VOICE TRANSCRIPT STATES F/STOP 1, BUT NO SUCH STOP EXISTS
						B			A1	2	17:11:35	30	17:11:35	30			
						B			A1	3	17:12:15	5	17:12:15	5			
5	12/17/73	32/351	NK04	BE08	55-UV	B	2.0	A3		1	16:59:10	30	16:59:10	30	201.5°	23.1°	SUNRISE AT 1704. PAD ASKED FOR 24.6° TILT, PLT SET TO 23.1°. PLT COULDN'T SEE COMET, DESCRIBED SEEING FUZZY WHITE BLOB
								A1	A1	2	17:00:00	3	17:00:02	3			
								C3	C3	3	17:00:45	90	17:00:51	87			
								B1	B1	4	17:02:55	60	17:02:55	63			
6	12/21/74	35/355	NK04	BE08	55-UV	B	2.0	A1	A1	1	01:50:20	1	01:50:20	1	206.5°	24.0°	ROTATION PER TRANSCRIPT 65. SUNRISE 01:54:20. USED FRAMES 22 THRU 26. SPT COULD NOT SEE COMET THRU CAMERA LENS
								A3	A3	2	01:50:30	30	01:50:46	30			
								C3	A3	3	01:51:40	60	01:51:40	1			
								B1	C3	4	01:53:20	60	01:51:52	60			
									B1	5			01:53:23	60			
7	12/21/73	36/355	NK04	BE08	55-VIS	B	1.2	A1	A1	1	23:36:35	1	23:36:35	1	208.2°	23.6°	SUNRISE AT 23:40:10. FOCUS ∞ FIRST FRAME-27, LAST 32. CAN'T VERIFY IF C2 WAS INSTALLED AND TAKEN. LAST EXPOSURE WENT BEYOND SUNRISE
								C1	C1	2	23:37:05	10	23:37:30	30			
								C2		3	23:37:30	30					
								D1	D1	4	23:38:35	30	23:38:50	25			
								D2	D2	5	23:39:20	10	23:39:45	6			
								D3	D3	6	23:39:45	25	23:39:59	15			

TABLE VII. S063 OPERATIONAL SUMMARY (CONTINUED)

PERFOR-MANCE	GMT CALENDAR DATE	MD/DOY	CAMERA	CASSETTE	LENS (MM)	SHUTTER SPEED	F/STOP	T025 FILTER PLANNED	T025 FILTER ACTUAL	NO. OF FRAMES	PLANNED TIMES START	PLANNED TIMES EXPOSURE (SEC)	ACTUAL TIMES START	ACTUAL TIMES EXPOSURE (SEC)	MIRROR ANGLES ROTATION	MIRROR ANGLES TILT	REMARKS
8	12/22/73	37/356	NK04	BE08	55-UV	B	2.0	A1	A1	1	16:43:00	1	16:43:02	1	209.6	23.6	SUNRISE AT 16:46:14. FRAME NUMBERS 37 THRU 33. ONE EXTRA EXPOSURE WAS TAKEN, THE SPT REPORTED THAT THE EXPOSURE DURATIONS WERE CORRECT, BUT THE EXACT START TIMES WEREN'T DEFINED.
								A3		2	16:43:10	15	~16:43:10	15			
								C3		3	16:44.05	45		45			
								B1	B1	4	16:45:40	30	16:45:40	30			
9	1/3/74	48/003	NK02	BV26	55-VIS	T	1.2	NONE		1	22:35:45	01	BETWEEN	1	N/A	N/A	HANDHELD (HH) PHOTOG THRU CM WINDOW REPORTED BY SPT ON DUMP TAPE FRAMES 32 THRU 29. SPT REPORTED 2 SEC EXP. MAY HAVE BEEN A LITTLE SHORT. ADDITIONAL (6) PHOTOS ON PAD 4824A NOT TAKEN.
								NONE		2		02	02:00:00	2	(HH)	(HH)	
								C2		3		04	TO	4			
								C4		4		4	03:00:00	4			
10	1/3/74	49/003	NK02	BV26	55-VIS	T	1.2	C2	NONE	1	TARGET OF OPPOR-TUNITY	4	17:15:00	1	N/A	N/A	USED SAME PAD 4824A, AS IN PERFORMANCE 9. SPT NOTED THE FRAMES TO BE 3 THRU 8 ON THE PREVIOUS PAD. HE DID NOT KEEP PRECISE TIME, BUT THE PHOTOS WERE HANDHELD. COMET DIMMER THAN JUPITER (MAG-1.6)
								C4	NONE	2		4		2	(HH)	(HH)	
								B3	D1	3		4					
								B4	D3	4		4					
								D1	C1	5		4					
								D3	C2	6		4	17:18:30				
11	1/5/74	50/005	NK03 (PLANNED 2 FRAMES)	CI FILM	55-VIS	T	1.2	NONE	B4	1		04	01:53:00	1½-2	N/A	N/A	SPT REPORTED AT 02:13:03 HANDHELD PHOTOS WERE STARTED AT SUNSET OUT OF THE CM WINDOW. FRAME NUMBERS 37 THRU 28. FIRST FRAME DONE TWICE DUE TO CAMERA PROBLEM. SPT REPORTS 10 FRAMES, ONE A LITTLE WEAK, WHICH CAN'T BE ACCOUNTED FOR.
			NK02 (PLANNED)	BV FILM	55-VIS	T	1.2	NONE	B4	2		4		4	(HH)	(HH)	
								NONE	D1	3		1		4			
								NONE	D2	4		2		4			
								D1	NONE	5		4		1			
								D3	NONE	6		4		2			
								C1	D3	7		4		4			
								C2	C1	8		4					
								B3	C2	9		4					
								B4		10		4					
								D1		11		4					
								D2		12		4					

TABLE VII. S063 OPERATIONAL SUMMARY (CONTINUED)

PERFOR-MANCE	GMT CALENDAR DATE	MD/DOY	CAMERA	CASSETTE	LENS (MM)	SHUTTER SPEED	F/STOP	FILTER PLANNED	FILTER ACTUAL	NO. OF FRAMES	PLANNED TIMES START	PLANNED TIMES EXPOSURE	ACTUAL TIMES START	ACTUAL TIMES EXPOSURE	MIRROR ANGLES ROTATION	MIRROR ANGLES TILT	REMARKS
12	1/5/74	51/005	(NK04)	BV FILM	55-VIS	T	1.2	NONE	NONE	1	TARGET	01	19:00	4 SEC	N/A	N/A	USED SAME PAD
								NONE	NONE	2	OF	02		6 SEC	(HH)	(HH)	AS IN PERFOR-
								D1	D1	3	OPPOR-	04		6 SEC			MANCE II.
								D3	D3	4	TUNITY	04		6			START AROUND
								C1	C1	5		04		6			SUNSET & WENT
								C2	C2	6		4		6			TO 1905.
								B3	B3	7		4		6			TOOK FRAME
								B4	B4	8		4		6			NUMBERS 27 TO
								D1	D1	9							18.
								D2		10							LAST 8 PHOTOS
																	AROUND 6 SEC
																	ALL FILTERED,
																	PROBABLY
																	FRAMES 5 TO 11
																	ON PAD 4936.
																	DID NOT PER-
																	FORM D2 FILTER
13	1/5/74	51/005	NK04	BE09	55-UV	B	NOT	A1	A1	1	23:37:45	01	23:37:45	1 SEC	244.8°	21.1°	COMET SET
							GIVEN	A3	A3	2	23:38:00	15	23:38:00	15 SEC			23:44:45.
								C1	C1	3	23:38:55	60	23:38:55	60 SEC			ROTATION IS
								C3	C3	4	23:40:10	60	23:40:10	60 SEC			4.05 TURNS CCW
								B1	B1	5	23:41:50	60	23:41:50	60 SEC			FROM ROT 000.0,
								D2	D2	6	23:43:30	60	23:43:30	(60 SEC)			SO THAT ROT
																	READS XX4.8
14	1/6/74	52/006	NK02	BV27	55-VIS	T	1.2	NONE	NONE	1	TARGET	2	19:51:05	2 SEC	N/A	N/A	NK02 FRAME
								NONE	NONE	2	OF	4	19:51:55	4 SEC	(HH)	(HH)	NUMBERS 45 &
								C1	C1	3	OPPOR-	4	19:53:01	4 SEC			46
								C2	C2	4	TUNITY	4	19:54:10	4 SEC			NK03 FRAMES
			NK03	CI FILM	55-VIS	T	1.2	NONE	NONE	5		4	23:01:15	4 SEC			45 & 46
													23:04:25	4 SEC			
15	1/7/74	53/007	(NK02)	BV28	55-VIS	T	(1.2)	NONE	NONE	1	TARGET	2	14:06:15	2 SEC	N/A	N/A	NK02 FRAME
								NONE	NONE	2	OF	4	14:06:50	4 SEC	(HH)	(HH)	NUMBERS 43,
								C1	C1	3	OPPOR-	4	14:08:10	4 SEC			42, 41, 40
								C2	C2	4	TUNITY	4	14:08:40	4 SEC			DID NOT PERFORM
			NK03	CI FILM	55-VIS	T	1.2	NONE		5							NK03 PHOTOG.
16	1/8/74	53/008	(NK03)	CI 113	55-VIS	T	1.2	NONE	NONE	1	TARGET	4 SEC	01:25:00	4 SEC			NK03 FRAME
			(NK02)	BV28	55-VIS	T	1.2	NONE	NONE	2	OF	2 SEC		4			NUMBER 7.
								NONE	NONE	3	OPPOR-	4		2			NK02 FRAME
								C1	C1	4	TUNITY	4		4			NUMBERS 38,37,
								C2	C2	5		4		4			36, 35, 34.
																	SPT NOTES ONE
																	EXTRA EXPOSURE,
																	BUT DIDN'T SAY
																	WHICH ONE

TABLE VII. S063 OPERATIONAL SUMMARY (CONTINUED)

PERFOR-MANCE	GMT CALENDAR DATE	MD/DOY	CAMERA	CASSETTE	LENS (MM)	SHUTTER SPEED	F/STOP	FILTER PLANNED	FILTER ACTUAL	NO. OF FRAMES	PLANNED TIMES START	PLANNED TIMES EXPOSURE (SEC)	ACTUAL TIMES START	ACTUAL TIMES EXPOSURE (SEC)	MIRROR ANGLES ROTATION	MIRROR ANGLES TILT	REMARKS
17	1/8/74	54/8	(NK03)	CI 113	55-VIS	T	1.2	NONE	NONE	1	TARGET	40	21:35:00	40	N/A	N/A	NK03 FRAME
			(NK02)	BV28	55-VIS	T	1.2	NONE	NONE	2	OF			2	(HH)	(HH)	NUMBER 22.
								NONE	NONE	3	OPPOR-			4			NK02 FRAMES
								C1	C1	4	TUNITY			4			NUMBERS 28, 27
								C2	C2	5			21:43:00	4			26, 25
																	CM WINDOW BECOMING MAR-GINAL
18	1/9/74	54/9	NK04	BE09	55-UV	B	2.0	A1	A1	1	00:41:30	1	00:41:00	1	254.7	21.7	ROTATION IS 3.7
								A1	A1	2		10	00:41:15	10			TURNS CCW AND
								A3	A3	3		30	00:41:40	30			WILL READ XX4.7
								A4	A4	4		120	00:42:30	120			
								C1	C1	5	00:45:00	90	00:45:00	90			
								C3	C3	6		60	00:46:40	60			
								B1	B1	7		60	00:47:56	60			
								D1	D1	8		150	00:49:10	150			
								D2	D2	9		90	00:51:50	90			
19	1/9/74	55/9	NK04	BE09	55-UV	B	2.0	A1	A1	1	20:54:00	1	20:54:00	1	255.8	21.1	ROTATION IS 3.7
								A1	A1	2		15	20:54:17	15			TURNS CCW AND
								A3	A3	3		30	20:54:41	30			WILL READ XX5.8
								A4	A4	4		90	20:55:22	90			
								C1	C1	5	20:57:15	60	20:57:18	60			
								C3	C3	6		90	20:58:20	90			
								B1	B1	7	21:00:30	90	21:00:30	90			
								B2	B2	8		120	21:02:11	120			
								D1	D1	9	21:04:45	150	21:04:48	150			
								D2	D2	10		60	21:07:31	60			
20	1/12/74	58/12	NK04	BE09	55-UV	B	2.0	A1	A1	1	22:02:00	15	20:01:51	15	262.1	21.4	ROTATION IS 3.4
								A3	A3	2*		30	22:02:11	34			TURNS CCW FROM
								A4	A4	3		120	22:02:55	120			ROT 000.0 SO
								B1	B1	4	22:05:45	90	22:05:21	90			THAT ROT. READS
								B3	B3	5		90	22:06:57	90			XX2.1
								B4	B4	6		30	22:08:32	30			*EXPOSURE WILL
								C2	A3	7**	22:10:15	90	22:09:13	20			NOT BE GOOD,
								C3	C2	8		90	22:10:05	90			SINCE FILTER WAS
								C4	C3	9		5	22:11:51	85			NOT IN PLACE UN-
								D3	C4	10	22:14:15	90	22:13:26	5			TIL AFTER SHUT-
								D4	D3	11		120	22:13:46	90			TER OPENED.
									D4				22:15:30	120			**REPEATED A3
																	EXPOSURE BECAUSE
																	OF PROBLEM MEN-
																	TIONED ABOVE.

TABLE VII. S063 OPERATIONAL SUMMARY (CONCLUDED)

PERFOR-MANCE	GMT CALENDAR DATE	MD/DOY	CAMERA	CASSETTE	LENS (MM)	SHUTTER SPEED	F/STOP	FILTER		NO. OF FRAMES	PLANNED TIMES		ACTUAL TIMES		MIRROR ANGLES		REMARKS
								PLANNED	ACTUAL		START	EXPOSURE	START	EXPOSURE	ROTATION	TILT	
21	1/13/74	59/13	(NK04)	BE09	55-UV	B	2.0	A1		1	21:24:00	10 SEC			265.3	23.7	7 EXPOSURES COMPLETED, BUT WENT INTO CALI-BRATION FRAMES, WHICH WERE USED FOR PRE-FLIGHT SENSITOMETRY. UNABLE TO FIND VOICE TRANSCRIPTS.
								A3		2		60					
								A4		3		150					
								B1		4	21:28:30	210					
								C1		5	21:32:30	60					
								C3		6		210					
								D2		7	21:37:40	60					
22	1/28/74	73/28	(NK04)	BE11	55-UV	B	2.0	A1	A1	1	00:22:00	30	00:22:00	30	21.4	20.4	
								C3	C3	2	00:23:00	180	00:23:00	180			

( ) = BEST ESTIMATE FROM TRANSCRIPTS OR PADS.

2. Experiment Operations. Experiment S073 operations, summarized in table VIII, performed three exposures in a session on December 10, 1973.

3. Constraints. There were no comet-peculiar constraints for S073.

4. Hardware Performance. Hardware appeared to perform satisfactorily during the mission. However, when the photographs were developed they were out of focus. The hardware performance is covered in reference [2].

5. Experiment Interfaces. All experiment interfaces performed satisfactorily during the mission.

6. Return Data. Cassette BV 44 was returned for evaluation.

7. Anomalies. All exposures taken with camera NK02 were out of focus. The NK02 camera anomaly is discussed in reference [1].

D. S183 Ultraviolet Panorama

The Principal Investigator for Experiment S183 is Dr. George Courtes, Laboratoire d'Astronomie Spatiale, Marseilles, France. The Experiment Developer was the Centre National d'Etudes Spatial, Laboratoire d'Astronomie Spatiale, Marseille, France.

1. Experiment Description.

a. Objectives. The scientific objective was to obtain ultraviolet, broad bandpass photographic photometry of the coma and tail at 1878 Å, 2558 Å, and 2970 Å. This data was to enable understanding of production rates, spatial distribution, lifetime and the effect of OH in the coma.

b. Concept. OH emission data from S183 and other experiments (S019, S063, T025) combined with the H Lyman-alpha emission data obtained by S201 and S082B of various heliocentric distances were to provide data on the amount of water, ice or snow in the comet. The S183 equipment had the special advantage of using a Fabry lens system which allowed high sensitivity microphotometry of the wavelength region under study.

c. Hardware Description. The S183 Spectrograph Assembly (SA) was a broad-band photographic photometer that measured the color indices of stellar objects in the field-of-view. Two SA bandpasses

TABLE VIII. S073 OPERATIONAL SUMMARY

S073 12/10/73 MD 24/DOY 344
CAMERA-NK02 LENS-55MMV/S CASSETTE-BV44
APERTURE F/1.2, FOCUS-INFINITY

PAD FRAME	PLANNED TIMES		ACTUAL TIMES		MIRROR ANGLES		REMARKS
	START	EXPOSURE	START	EXPOSURE	ROTATION	TILT	
5	01:20:00	6 min	01:20:00	6 min	184.6°	32.6°	During this performance the earth passed through the comet's orbital plane and the experiment was to photograph any large particle debris which may have been left behind.
6	01:27:00	9 min	01:27:00	9 min	186.1°	31°	
7	01:37:00	2 min	01:37:00	2 min	187.6°	31°	Tilt angle set to 32.6°; pad required 31°.

were approximately 635 Å wide and were centered at 1878 Å and 2970 Å. A third direct photographic record at 2560 Å was obtained by using the Skylab Maurer 16mm camera and a type 103a0 UV-sensitive film. The S019 AMS was used to view the comet. The S183 optical schematic is illustrated in figure 10.

2. Experiment Operations. S183 experiment operations for viewing the comet differed from the stellar observations only in maneuvering the vehicle. S183 comet observations are summarized in table IX.

3. Constraints. The experiment constraints were satisfactorily met during the mission.

4. Hardware Performance. Hardware performance is covered in reference [2].

5. Experiment Interfaces. Experiment interfaces are covered in reference [2].

6. Return Data. Carrousels 1-1 and 2-2, and one data acquisition camera (DAC) 140 ft. magazine were returned for evaluation.

7. Anomalies. None of the carrousel 1-1 or 2-2 cometary plates were exposed, due to hardware problems. The anomalies are discussed in references [1] and [2].

E. S201 Far-UV Electronographic Camera

The Principal Investigator is Dr. Thornton L. Page, Naval Research Laboratory (NRL), Washington, D.C. (Dr. Page is located at JSC); Dr. George R. Carruthers, NRL, is a co-investigator. The experiment developer was NRL.

1. Experiment Description.

a. Objectives. The scientific objectives were to obtain H Lyman-alpha and atomic oxygen emission imagery of the coma.

b. Concept. Data from the far-ultraviolet camera was to be studied to understand the growth and structure of the hydrogen halo with heliocentric distance and the atomic oxygen production rate and distribution.

The data was to be provided through analysis of photographs with bandpasses of 1050-1600 and 1230-1600 Å. The S201 equipment had the special advantage of being designed for H Lyman-alpha emission imagery, having been used on the lunar surface for galactic and geocorona photography. The large field-of-view (FOV) allowed the largest structure of the coma produced by the most abundant atom to be photographed.

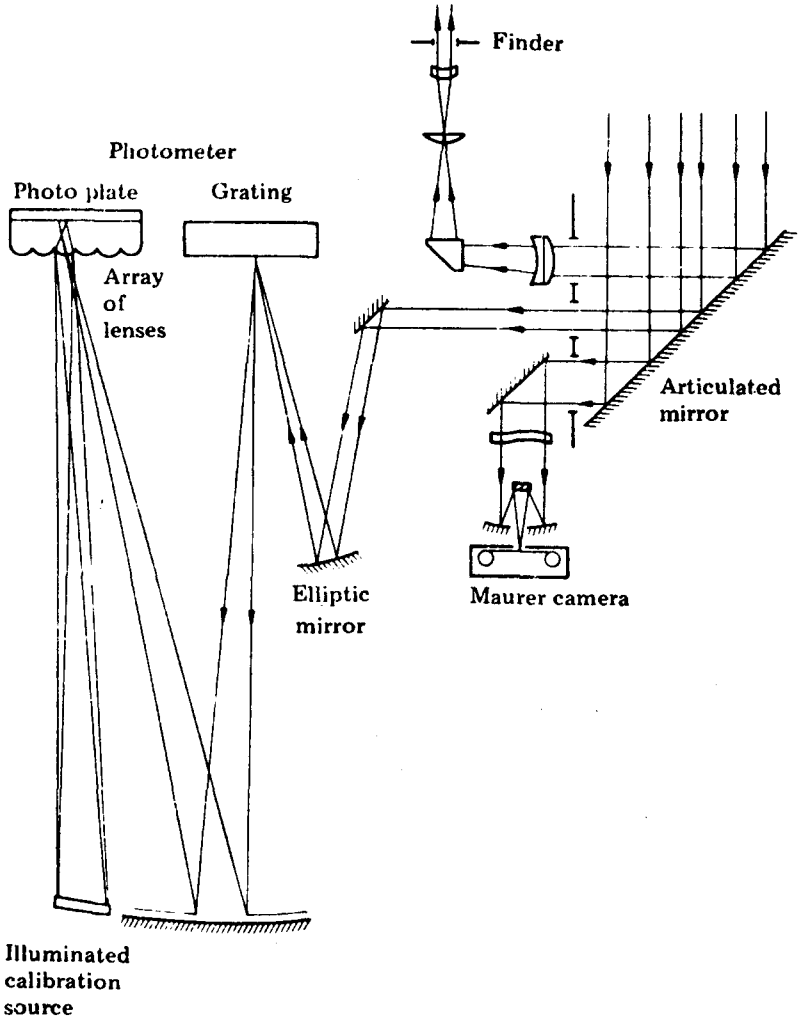

FIGURE 10. S183 OPTICAL TRAIN

TABLE IX. S183 OPERATIONAL SUMMARY

PERFOR-MANCE	GMT CALENDAR DATE	MD/DOY	CARRIAGE PLATE	TIME AVAILABLE FROM	TIME AVAILABLE TO	PLANNED EXPOSURE TIME (SEC)	ACTUAL SEQUENCE START	ACTUAL EXPOSURE START	ACTUAL EXPOSURE TIME (SEC)	MIRROR ANGLES ROTATION	MIRROR ANGLES TILT	SUNRISE (SR) OR SUNSET (SS) TIME	REMARKS
1	12/7/73	21/341	2-2/08	02:06	02:11	300	02:06:00	02:07:25	225	214.7°	24.5°	0211 SR	
2	12/14/73	28/348	1-1/14	00:22	00:27	300	00:22:00	00:23:20*	241	195.8°	25.0°	0027 SR	AT 00:23:06 COMET CLEARED AIRGLOW LAYER. COMET IN LOWER RIGHT SIDE OF FIELD OF VIEW AT 4 O'CLOCK APPROXIMATELY 0.6 TO 0.7 RADIUS. TAIL POINTING DOWN TO 5 O'CLOCK. DUE TO A PROCEDURAL ERROR PLATE 14 WAS USED RATHER THAN PLATE 22, AS INDICATED ON THE PAD.
3	12/18/73	33/352	2-2/16	22:31	22:36	160	22:31:00	22:32:09*	160 *	205.6°	21.2°	2236 SR	COMET IN SIGHT AT APPROXIMATELY 22:32:15 SLIDE IN FOV AT APPROXIMATELY 22:32:09.
4	1/3/74	49/003	1-1/15	15:41	15:45	160	15:41:00	15:42:08	160 *	253.1°	20.3°	1541 SS	8.9 TURNS CW FROM ROTATION 000.0, SO THAT ROTATION READS XX3.1. NO APPARENT EXPOSURE TIME PROBLEM.
5	1/10/74	55/10	2-2/25	00:02	00:16	300	00:02:20	00:03:36*	300 *	255.3°	19.1°	00:02 SS	3.7 TURNS CCW FROM ROTATION 000.0, SO THAT ROTATION READS XX5.3°. TILT CHANGED FROM 24.3° TO 19.1°.
6	1/11/74	57/11	2-2/10	22:40	22:58	620	22:41:-	~22:42:20	~625 •	258.9°	20.4°	2241 SS	3.6 TURNS CCW FROM ROTATION 000.0, SO THAT ROTATION READS XX5.3°. PLT DID NOT TURN RECORDER ON. SO START TIME CAN'T BE OBTAINED; STOP TIME FROM MOPS 22:53:05.

* BASED ON MOPS DATA

c. Hardware Description. The sensor optics consisted of an f/1 Schmidt Camera mounted in a pressure vessel, which permitted both anti-solar SAL and EVA operation. The instrument had a FOV of 20 degrees. The FOV was reduced to 7 degrees when used with the S019 AMS.

A cutaway view of the basic sensor is shown in figure 11. Far-UV exposures were made through a lithium fluoride filter-corrector plate and alternately through a calcium fluoride filter. The optical image was formed on a potassium bromide photocathode which generated photoelectrons. A -25 kilo-volt (kV) potential accelerated them toward 35mm special order nuclear-track emulsion (Eastman Kodak Film NTB-3). Between the cathode and the film, a strong axial magnetic field cylinder focused the electrons, which passed through a thin, light proof membrane just ahead of the film. Corrector plate selection, film advance and exposure times were semiautomatically controlled. In a complete sequence, the lithium fluoride plate was selected first and exposures of 1, 2.5, 6 and 15 seconds obtained, yielding H Lyman-alpha imagery. Next, the calcium fluoride plate was selected and 3, 10, 30 and 107 second exposures were taken yielding atomic oxygen imagery. There was no shutter, so each of the eight exposures started and ended with a film advance. The total time required for this sequence was 205 seconds. It could be interrupted at any point by the astronaut pressing the start switch. An option also existed to obtain an exposure after the 107 seconds elapsed through the CaF_2 filter by waiting for the desired time and then pressing the start switch.

2. Experiment Operations. The camera interfaced with the S019 AMS and anti-solar SAL. The spacecraft was rolled up to 90 degrees about the longitudinal axis and the AMS was aligned for comet observations. At each pointing a sequence was performed to obtain the desired number of comet images.

In the EVA mode, the crewman would attach the S201 to the ATM truss using a modified S020 mounting bracket and point the camera at the comet using an integral sight. A vehicle roll about the longitudinal axis up to 16 degrees during preperihelion and up to 45 degrees postperihelion was utilized to put the camera in the ATM solar panel shadow. This was required during EVA operations while the spacecraft was in sunlight and the comet was near perihelion.

S201 was operated fourteen times for comet observations and obtained 108 exposures. The operations are summarized in table X.

3. Constraints. The experiment constraints were satisfactorily met during the mission.

4. Hardware Performance. Hardware performance is covered in reference [1].

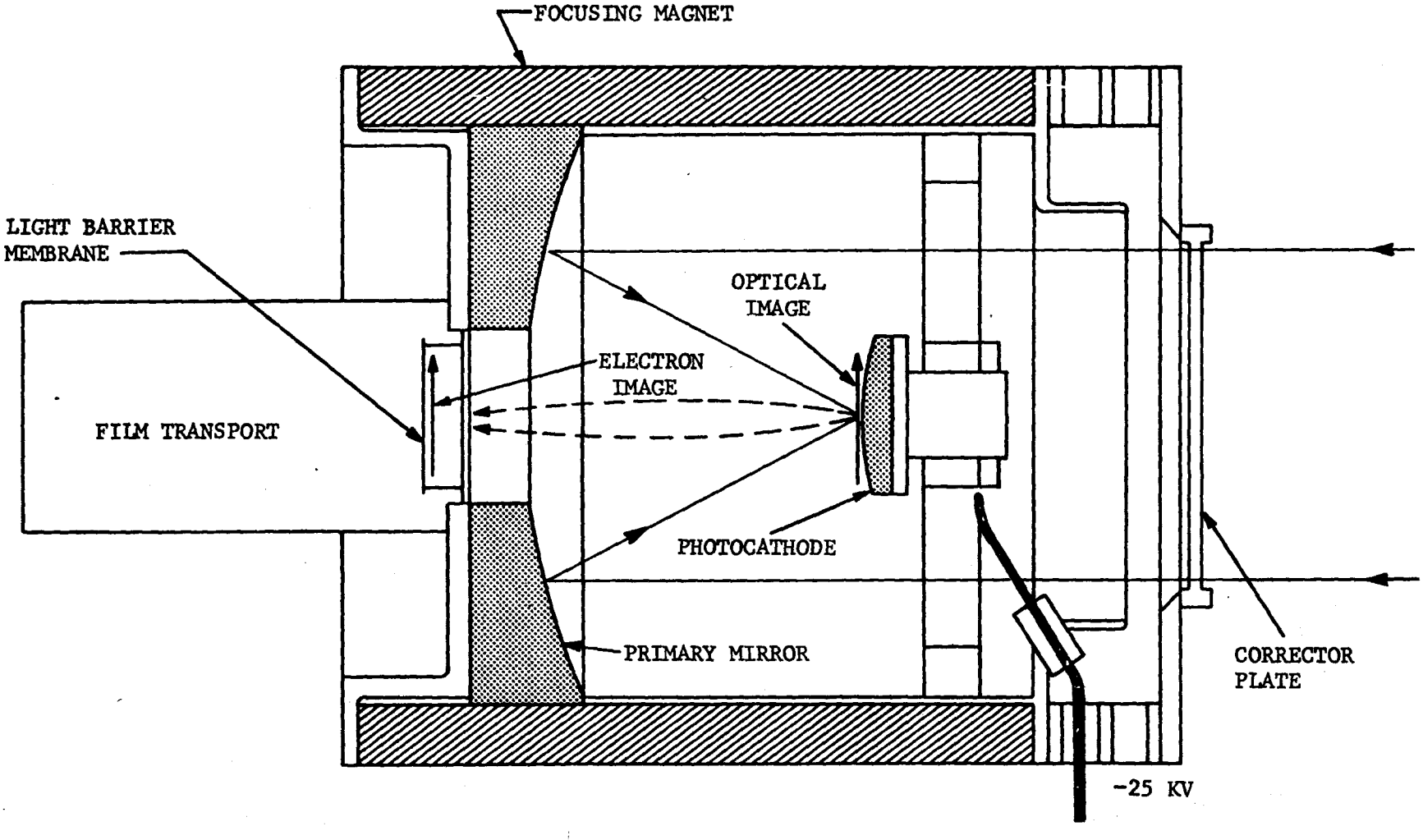

FIGURE 11. S201 FAR-UV CAMERA

TABLE X. S201 OPERATIONAL SUMMARY

PERFOR-MANCE	GMT CALENDAR DATE	MD/DOY (GMT)	NUMBER OF FRAMES/EXPOSURES	PLANNED TIMES START	PLANNED TIMES STOP	ACTUAL TIMES START	ACTUAL TIMES STOP	MIRROR ANGLES ROTATION	MIRROR ANGLES TILT	REMARKS
1	11/26/73	11/330	11/9	23:29:00	23:37:27	23:28:57	23:37:26	206.7°	24.1°	FILM TRANSPORT NO. 1 LAUNCHED INSTALLED. PLT NOTED MOMENTARY FLASHING OF WHITE LIGHT.
2	12/5/73	20/339	11/9	22:06:44	22:14:01	22:07:44	22:14:00	214.7°	25.1°	SEQUENCE STARTED ONE MINUTE LATE AND TIMED OUT AFTER 3 MINUTES 26 SECONDS AT 22:11:10.
3	12/12/73	26/346	11/9	01:45:31	01:49:56	01:45:29	01:49:56	205.9°	24.1°	PLT EXPRESSED DIFFICULTY IN SETTING ROTATION AND TILT NUMBER, SINCE THEY WERE BLACK ON BLACK. HAD TO READ SETTINGS WITH FLASHLIGHT.
4	12/16/73	31/350	10/8	17:40:31	17:46:57	17:40:30	17:46:56	203.1°	24.9°	
5	12/23/73	38/357	10/8	16:03:00	16:06:27	16:03:00	16:06:27	214.5°	23.5°	THE CDR NOTED THE SUNLIGHT WAS COMING IN THE WARDROOM WINDOW FOR A GOOD 45 SECONDS PRIOR TO COMPLETION. THEREFORE THE LAST PHOTO OF 107 SEC EXPOSURE WAS PROBABLY OVEREXPOSED. FILM TRANSPORT NO. 2 INSTALLED.
6	12/25/73	40/359	24/20			21:32:30 21:37:30 21:41:45	21:37:30 21:41:45 21:46:30	N/A (EVA)	N/A (EVA)	EVA OPERATIONS: CREW COULD NOT SEE COMET. SPACECRAFT POINTING X MINUS 19°, Y&Z ZERO.
7	12/29/73	44/363	NONE			20:08:31 20:25:10 20:29:20	20:13:25 20:29:20 20:33:15	N/A (EVA)	N/A (EVA)	RESET AT 20:09:38, SMALL OSCILLATIONS FOR APPROXIMATELY FIRST 2 SECONDS. DURING FIRST SEQUENCE VEHICLE WAS DRIFTING. SPACECRAFT POINTING APPROXIMATELY 2° OFF IN Z, 0.2° IN X FOR FIRST EXPOSURE.
8	1/2/74	48/002	10/8	22:35:10	22:38:38	22:35:10	22:38:40	257.6°	18.5°	FILM TRANSPORT NO. 3 INSTALLED.
9	1/6/74	52/006	11/9	13:36:40	13:43:42	13:36:40	13:43:42	250.7°	23.6°	VOICE TRANSCRIPT TILT 43°?
10	1/10/74	56/010	11/9	17:10:30	17:22:12	17:10:30	17:22:13	254.7°	23.7°	CDR COMMENTED PAD TIME ALLOWED TO SET ROTATION OF 1 MINUTE PERHAPS SHOULD HAVE BEEN 2 MINUTES
11	1/13/74	58/13	11/9	01:14:30	01:24:32	01:14:31	01:24:32	260.1°	23.3°	
12	1/15/74	60/15	3/3	01:30:30	01:30:23	01:30:00	01:30:23	268°	25.9°	ROTATION PER TRANSCRIPT 265.9°, TILT 25°
13	1/26/74	71/26	3/3	00:13:00	00:13:24	00:13:00	00:13:24	018°	23.6°	
14	1/2/74	78/33	4/4	00:00:00	00:00:30	00:00:00	00:00:30	020.6°	24.4°	

5. Experiment Interfaces. Experiment interfaces are discussed in reference [1].

6. Return Data. Film transports 1, 2, and 3 were returned.

7. Anomalies. The PI reported 500 frames were exposed on 3 rolls of film, and that the film advance mechanism was advancing more frames than indicated, such that no available film remained in the camera when the second EVA took place on December 29, 1973. He further noted water damage to film which caused fogging, a reduction in camera sensitivity caused by coronal discharge of the photocathode, and graininess to the film in transport #3. Description of these anomalies is contained in reference [1].

F. S233 Kohoutek Photometric Photography

The Principal Investigator for Experiment S233 is Dr. Charles Lundquist, Director of the Space Science Laboratory (SSL), MSFC, Huntsville, Alabama. Co-investigators are Mr. Ray V. Hembree, Assistant Director of the SSL and Mr. Paul D. Craven, SSL.

1. Experiment Description.

a. Objectives. The objectives were to obtain a series of visible light photographs suitable for photometry and to provide a photographic history of the comet.

b. Concept. Emphasis was to be placed on the use of defocused photographs of starfields and the comet coma to obtain calibrated photometric data. These photographs were to be made with specified focus settings of the camera lens (15 ft.). The defocused star images for which magnitude and spectral type are known, were to serve as a total optical system absolute calibration, including the window, scattered light, etc.

Long duration in-focus exposures were to be taken as part of the observational sequence to record as much tail structure as possible. Previous and/or subsequent out-of-focus starfield photographs were to provide calibration for these in-focus photographs.

The photographs were taken twice each day, when possible, to provide a more frequent and uniform photographic record of the comet than was possible from any single earth-based observatory.

c. Hardware Description. Photographs of the comet and starfields were taken with an operational 35mm Nikon Camera using the 55mm focal length lens. The camera has a focal range from 2 feet to infinity, an aperture range from f/1.2 to f/16 and a 43 degree field-of-view across diagonals.

2. Experiment Operations. Photographs were taken through the Structural Transition Section (STS) and Command Module (CM) windows; STS 242 (S-4), STS-243 (S-3) and CM-1. Figures 12, 13 and 14 illustrate the viewing time when each window was available with the vehicle in the SI mode. The experiment was operated on 73 separate occasions and obtained 240 exposures. The operations are summarized in table XI.

3. Constraints. The experiment constraints were satisfactorily met except that:

Some sessions did not inhibit momentum dumps (IMD);

Some photographs extended into sunrise;

Two performances were not scheduled on some days;

Some photos did not use remote cable release; and the

Requirements to stow film in the vault between performances was waived.

The control moment gyro, CMG #1 loss caused momentum management problems and reordering of priorities for IMD.

The photographs taken without the remote cable release were handheld since the S073 experiment was also using the remote cable release.

The camera installation at the window required approximately 30 minutes of crew time. Camera stowage in the film vault after each use would have required excessive installation time for the next operation. Radiation problem analysis indicated that the loss of film sensitivity would not be serious, if the film remained in the operational position. Therefore the requirement was waived.

4. Hardware Performance. The Nikon Camera performed satisfactorily while mounted at CM-1, STS-242 (S-4) and STS-243 (S-3) windows.

5. Experiment Interfaces. There was no formal interface control documentation. However, the astronauts taped the camera to a rotatable mirror structure over the CM-1 window and improvised cardboard to tape the camera in place at the STS-242 and STS-243 windows.

6. Return Data. The four exposed cassettes of 35mm film were returned.

7. Anomalies. Anomalies experienced were not of a catastrophic nature and the experiment operations continued following them.

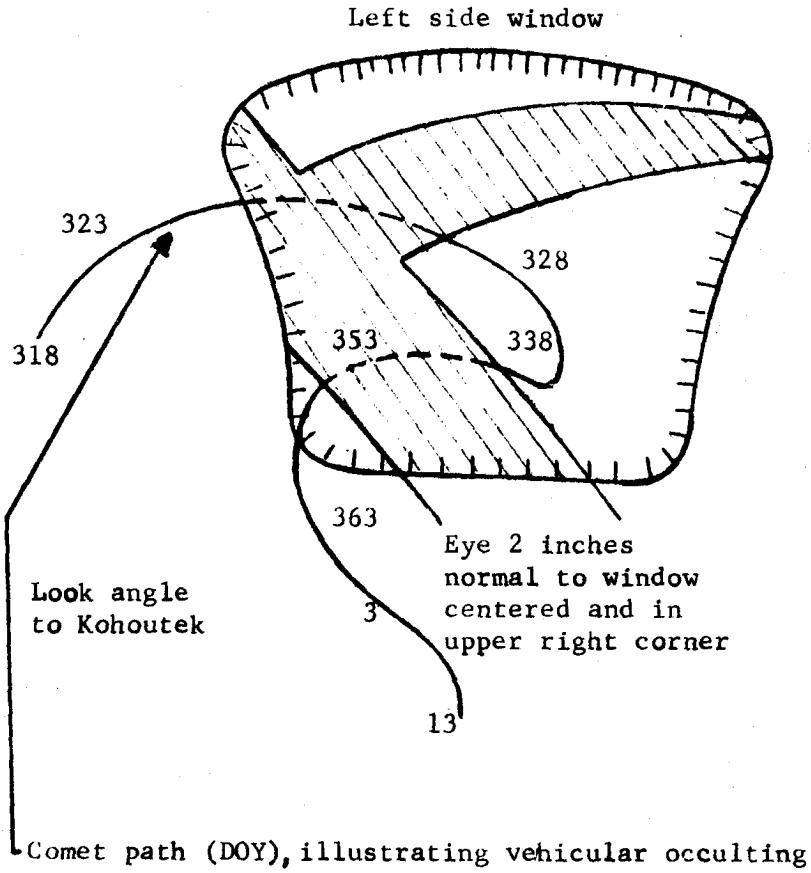

FIGURE 12. CM-1 WINDOW VIEWING CONSTRANTS

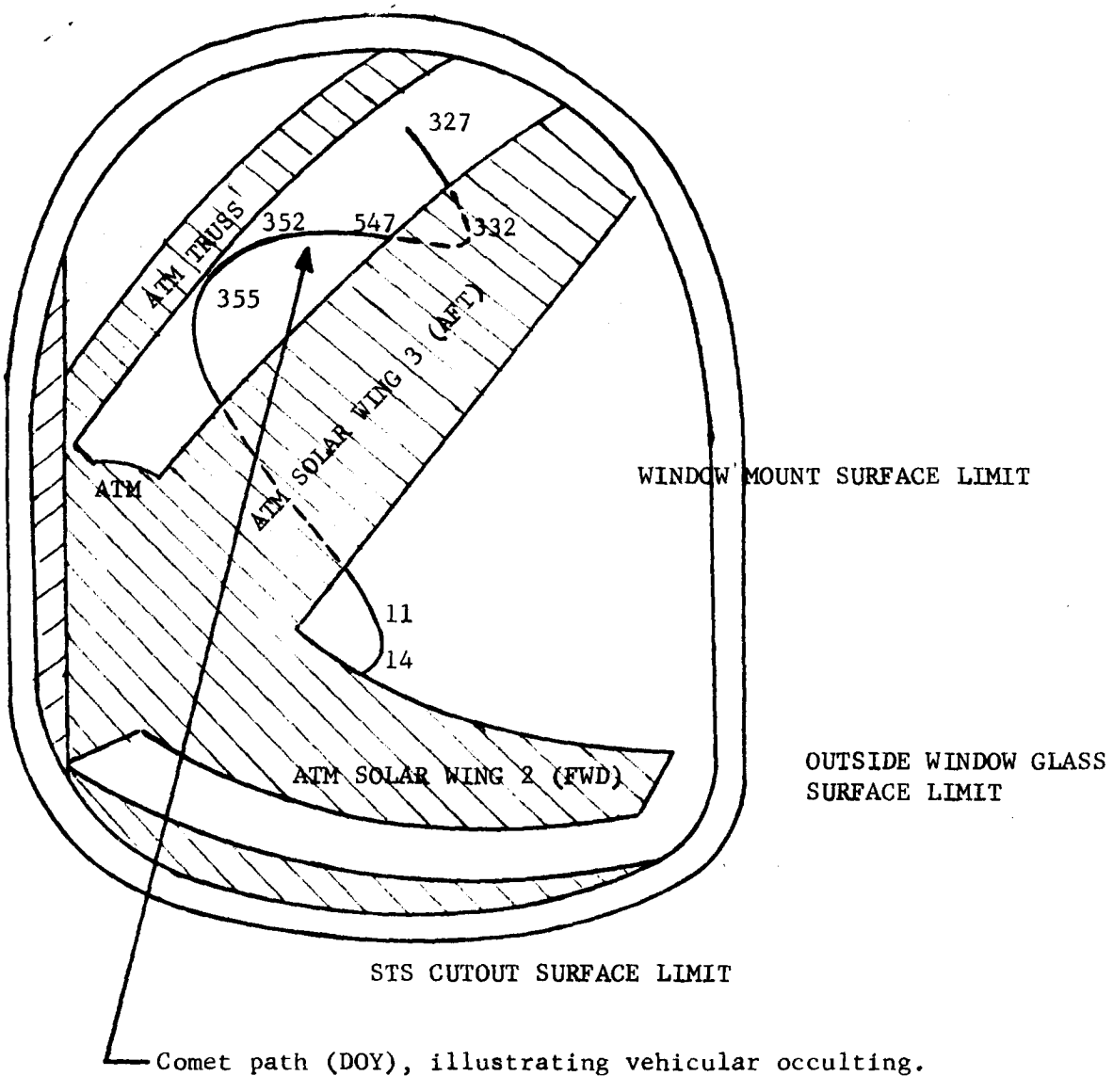

FIGURE 13. STS-242 WINDOW VIEWING CONSTRAINTS

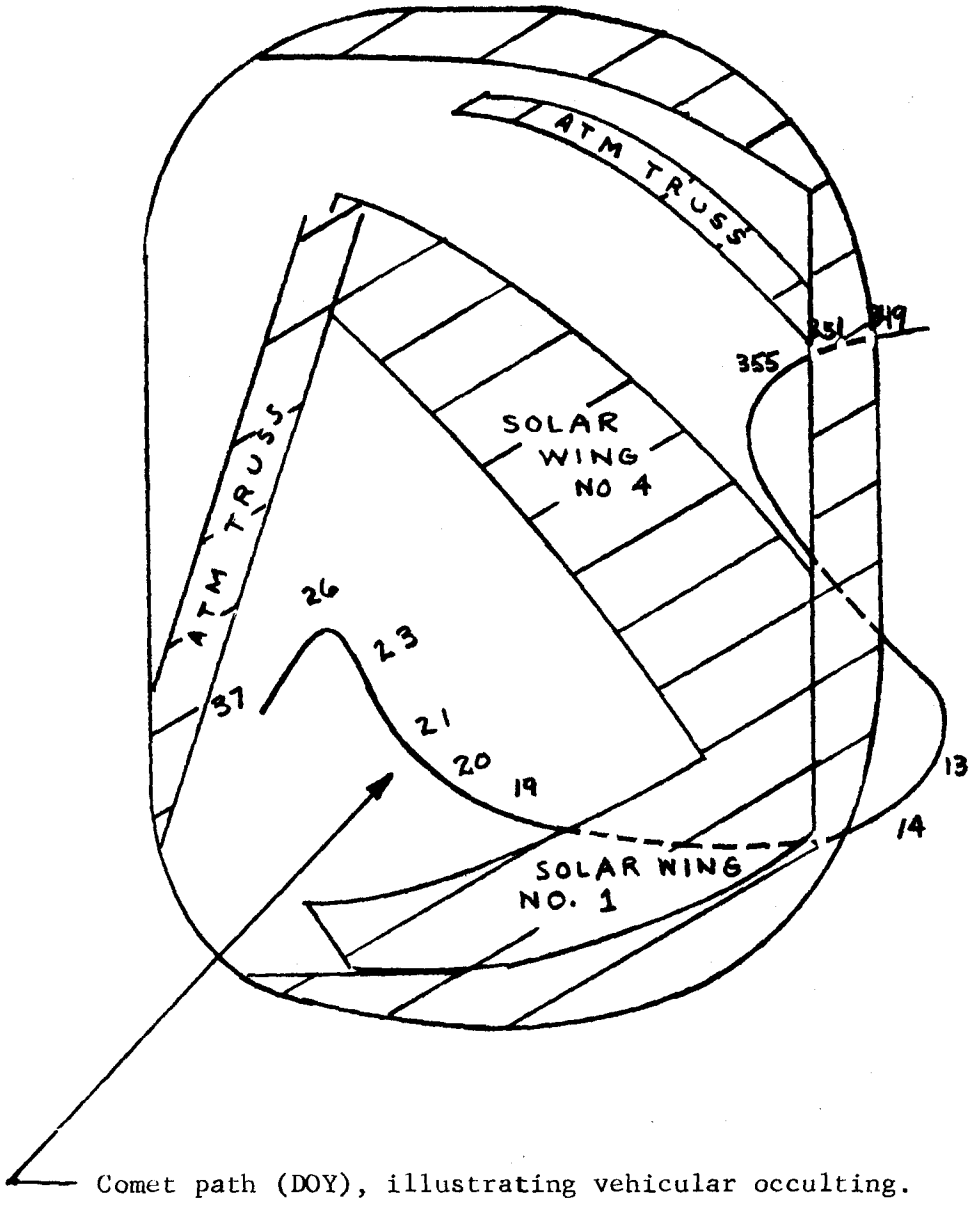

FIGURE 14. STS-243 WINDOW VIEWING CONSTRAINTS

TABLE XI. S233 OPERATIONAL SUMMARY

FUNCTIONAL OBJECTIVE	GMT CALENDAR DATE	MD/DOY	FRAME	FOCUS (FT)	GMT	EXPERIMENT TIME (SEC)	IND	WINDOW	CREWMAN	COMET RISE	SUN RISE	REMARKS
2	11/23/73	08/327	01	15	2351	60	NO	CM-1	PLT	2348	0010	CREW USED PREVIOUSLY SENT UP PAD INSTEAD OF LATEST VERSION. CMG FAILURE. PLT REPORTED HE WAS 30 SECONDS LATE ON THE EXPOSURE. HE COULD NOT SEE THE COMET.
			02	INF	2353	120	NO	CM-1				
			03	15	2356	60	NO	CM-1				
4	11/24/73	09/328	04	15	2311	60	NO	CM-1	CDR	2306	2331	DOUBLE EXPOSURE FRAME 05. CAMERA POINTED IN WRONG DIRECTION? PER CREW COMMENTS.
			05	INF AND 15	2313/5	120 AND 60	NO					
			06	INF	2138	120	NO					
5	11/25/73	10/329	07	15	1625	60	YES	CM-1	SPT	1612	1637	
			08	INF	1627	120	YES					
			09	15	1630	60	YES					
6	1 /26/73	10/330	10	?	0439	?	NO	CM-1	SPT	0439	0505	PHOTOGRAPH OF RED PARTICLES? VERBAL UPDATE, MISSED PAD TIMES.
			11	15	0440	60	NO					
			12	INF	0442	120	NO					
			13	15	0445	60	NO					
8	11/27/73	11/331	14	15	0240?	60	YES	CM-1	CDR	0225	0250	CDR SAID HE TOOK 3 PICTURES BUT ONLY REPORTED FRAME COUNT 16.
			15	INF	0242	120	YES					
			16	15	0245?	60	YES					
9	11/27/73	12/331	17	15	1325	60	NO	CM-1	PLT	1314	1344	
			18	INF	1337	120	NO					
			19	15	1340	60	NO					
10	11/28/73	12/332	20	15	0335	60	NO	CM-1	PLT	0319	0343	CREW DID EARLIER THAN PLANNED. VOICE COMMENT TO CREW THAT MOMENTUM WOULD NOT BE INHIBITED.
			21	INF	0337	120	NO					
			22	15	0340	60	NO					
11	11/28/73	13/332	23	15	1421	60	NO	CM-1	SPT	1415	1436	
			24	INF	1423	120	NO					
			25	15	1426	60	NO					FRAME COUNT REPORTED AS 29 AFTER THESE OPS. NO EXPLANATION OF WHICH WAS EXTRA FRAME.
12	11/29/73	13/333	26	15	0248	60?	NO	CM-1	PLT	0243	0302	
			27	INF	0250	120?	NO					
			28	15	0253	60?	NO					
			29		?	?	NO					
13	11/29/73	14/333	30	15	1344	60	YES	CM-1	CDR	1338	1355	
			31	INF	1346	120	YES					
			32	15	1349	60	YES					
14	11/30/73	14/334	33	15	0344	60	YES	CM-1	SPT	0339	0355	
			34	INF	0346	120	YES					
			35	15	0349	60	YES					
15	11/30/73	15/334	36	15	1304	60	NO	CM-1	PLT	1300	1310	
			37	INF	1306	120	NO					
			38	15	1309	60	NO					

TABLE XI. S233 OPERATIONAL SUMMARY (CONTINUED)

FUNCTIONAL OBJECTIVE	GMT CALENDAR DATE	MD/DOY	FRAME	FOCUS (FT)	GMT	EXPERIMENT TIME (SEC)	IMD	WINDOW	CREWMAN	COMET RISE	SUN RISE	REMARKS
16	12/1/73	15/335	39	15	0304	60	YES	CM-1	PLT	0301	0314	
			40	INF	0306	120	YES					
			41	15	0309	60	YES					
17	12/1/73	16/335	42		1354	?	NO	CM-1	PLT	1354	1406	BELIEVE USED 4 FRAMES HERE?
			43	15	1354	60	NO					
			44	INF	1356	120	NO					
			45	15	1359	60	NO					
18	12/2/73	16/336	46	-	0219	1/1000	YES	HAND	SPT	0221	0232	F/16 HAND IN FRONT.
			47	15	0220	10	YES	CM-1				F/16 STARFIELD. ALL FRAMES
			48	15	0220	30	YES					F/16 STARFIELD. PROBABLY
			49	15	0221	60	YES					F/16 STARFIELD. SHOULD BE
			50	15	0223	120	YES					F/16 STARFIELD. 1 GREATER.
			51	INF	0226	120	YES					FRAME COUNT REPORTED TO BE 52.
			52	?	?	?	?					
19	12/2/73	17/336	53	15	1448	60	NO	CM-1	CDR	1448	1458	RETOOK SECOND FRAME DUE TO CABLE
		17/336	54	INF	1450	120	NO					RELEASE JAM. CDR REPORTED HE LOST
			55	INF	1452	120	NO					2 FRAMES.
			56	15	1455	60	NO					
20	12/3/73	17/337	57	15	0315	60	YES	CM-1	CDR	0315	0324	HAD TO RETAKE THIRD FRAME DUE TO
			58	INF	0317	120	YES					CABLE RELEASE JAM. CDR PERFORMED
			59	15	0320	60	YES					INSTEAD OF PLT AS IN PAD. ONLY
			60?	15	0320	60	YES					SUPPOSED TO BE 59 FRAMES IN CASSETTE.

TABLE XI. S233 OPERATIONAL SUMMARY (CONTINUED)

FUNCTIONAL OBJECTIVE	GMT CALENDAR DATE	MD/DOY	FRAME	FOCUS (FT)	GMT	EXPERIMENT TIME (SEC)	IMD	WINDOW	CREWMAN	COMET RISE	SUN RISE	REMARKS
21	12/3/73	18/337	01	15	14:08:45	60	NO	CM-1	CDR	1408	1417	HAD PROBLEM WITH FRAME 00.
			02	INF	14:10:30	120	NO					
			03	15	14:13:15	60	NO					
22	12/4/73	18/338	04		0233	1/1000	NO	CM-1	CDR	0235	0242	HAND IN FRONT F/16.
			05	15	0234	10	NO					
			06	15	0234	30	NO					
			07	15	0235	60	NO					
			08	15	0236	120	NO					
			09	INF	0239	120	NO					CREW REPORTED 11. SUNLIGHT MAY HAVE WIPED OUT LAST FRAME.
23	12/4/73	19/338	11	15	1328	60	NO	CM-1	CDR	1328	1335	
			12	INF	13:29:30	120	NO					
			13	15	1332	60	NO					
24	12/5/73	19/339	14	15	0021	60	YES	CM-1	PLT	0021	0028	
			15	INF	0022	120	YES					
			16	15	0024	60	YES					
25	12/5/73	20/339	17	15	1247	60	NO	CM-1	CDR	1247	1254	PADS CHANGED TO IDENTIFY ONLY TIME OF FIRST EXPOSURE. COMET NEARING SOLAR PANEL.
			18	INF		120	NO					
			19	15		60	NO					
27	12/6/73	21/340	20	15	1820	60	NO	CM-1	CDR	1820	1825	MISSED EARLIER SCHEDULE (WHICH HAD IMD).
			21	INF		120	NO					
			22	15		60	NO					
28	12/7/73	21/341	23	15	0033	60	NO	CM-1	CDR	0033	0038	CDR REPORTED SCATTERED SUNLIGHT OVER-EXPOSED THE THIRD FRAME.
			24	INF		120	NO					
			25	15		60	NO					
29	12/7/73	22/341	26	15	1258	60	NO	CM-1	CDR	1259	1304	
			27	INF		120	NO					
			28	15		60	NO					
30	12/8/73	22/342	29	15	0124	60	NO	CM-1	CDR	0125	0129	CDR FELT THAT TIME AVAILABLE AT CM WINDOW WAS INSUFFICIENT. COMET WENT BEHIND SOLAR PANEL.
			30	INF		120	NO					
			31	15		60	NO					
35	12/10/73	25/344	32	15	1534	60	YES	STS-3	PLT	1535	1539	CREW TOLD TO TAKE EVEN IF NOT VISIBLE - 3 FRAMES.
			33	INF		120	YES	STS-3				
			34	15		60	YES	STS-3				
36	12/11/73	22/345	35	15	0227	60	YES	STS-3	PLT	0228	0231	CREW TOLD TO TAKE ONLY IF VISIBLE, ONLY 5 FRAMES TAKEN OF 6.
			36	INF		120	YES					
37	12/11/73	26/345	37	15	1453	60	NO	STS-3	CDR	1453	1457	TOO MUCH LIGHT FOR THIRD FRAME.
			38	INF	14:54:20	120	NO					

TABLE XI. S233 OPERATIONAL SUMMARY (CONTINUED)

FUNCTIONAL OBJECTIVE	GMT CALENDAR DATE	MD/DOY	FRAME	FOCUS (FT)	GMT	EXPERIMENT TIME (SEC)	IMD	WINDOW	CREWMAN	COMET RISE	SUN RISE	REMARKS
38	12/12/73	27/346	39	15	0451	60	NO	STS-3	PLT	0452	0456	HORIZON BRIGHT ABOUT 15 SECONDS INTO THIRD FRAME.
			40	INF	04:52:30	120	NO					
			41	15	04:55	60	NO					
39	12/12/73	27/346	42	15	1544	60	YES	STS-3	PLT	1545	1549	THIRD FRAME OVEREXPOSED BY TOO MUCH SUNLIGHT.
			43	INF		120	YES					
			44	15		60	YES					
40	12/13/73	27/347	45	15	0237	60	YES	STS-3	CDR	0238	0242	
			46	INF		120	YES					
			47	15		60	YES					
41	12/13/73	28/347	48	15	1329	60	NO	STS-3	PLT	1330	1334	CREW SAYS 42 FRAMES?
			49	INF		120	NO					
			50	15		60	NO					
42	12/13/73	28/347	51	15	2255	60	NO	STS-3	CDR	2255	2259	STARTED LATE - DID ON LATER ORBIT THAN PAD. THIRD FRAME OVEREXPOSED BY DIRECT SUNLIGHT LAST 2 SECONDS.
			52	INF	22:56:15	120	NO					
			53	15	22:58:30	60	NO					
43	12/14/73	29/348	54	15	1421	60	NO	STS-3	CDR	14:22:39	1426	
			55	INF	14:22:39	120	NO					
			56	15	14:24:59	60	NO					
46	12/16/73	30/350	57	15	0033	60	YES	STS-3	SPT	00:34:30	0038	
			58	INF	00:34:30	120	YES					
			59	15		60	YES					

TABLE XI. S233 OPERATIONAL SUMMARY (CONTINUED)

FUNCTIONAL OBJECTIVE	GMT CALENDAR DATE	MD/DOY	FRAME	FOCUS (FT)	GMT	EXPERIMENT TIME (SEC)	IMD	WINDOW	CREWMAN	COMET RISE	SUN RISE	REMARKS
47	12/16/73	31/350	01	15	1432:17	60	YES	STS-3	CDR	1433:56	1438	FRAME 00 CLICKED OFF N.G. COMET IN
			02	INF	1433:56	120	YES					AIRGLOW ON FRAME 01. COMPLETED WELL
			03	15	1436:15	60	YES					BEFORE SUNRISE.
48	12/17/73	31/351	04	15	0432:50	60	NO	STS-3	CDR	?	?	MISSED 2 PREVIOUS OPPORTUNITIES. 3FR
			05	INF	0434:08	120	NO					FRAME COUNT 6 MEANS READY TO DO 6.
49	12/17/73	32/351	06	15	1525	60	NO	STS-3	CDR	1526:19	1530	
			07	INF	1526:19	120	NO					
			08	15		60	NO					
50	12/17/73	32/351	09	15	2138	60	NO	STS-3	CDR	2139:17	2143	
			10	INF	2139:17	120	NO					
			11	15	21:41:34	60	NO					
51	12/18/73	33/352	12	NO GOOD	1617	NO GOOD	YES	STS-3?	CDR	1618:52	1623	CABLE LOCK POSITION PROBLEM.
			13	NO GOOD	1617	NO GOOD	YES					
			14	NO GOOD	1617	NO GOOD	YES					
			15	INF	1618:52	120	YES					
			16	15	16:21:04	60	YES					FRAME COUNT 17 MEANS READY TO DO 17.
53	12/19/73	34/353	17	15	1403	60	NO	STS-3	PLT	1404:54	1409	
			18	INF	1404:54	120	NO					
			19	15		60	NO					
54	12/20/73	34/354	20	15	0230	60	NO	STS-3	PLT	0231:16	0235	
			21	INF	0231:16	120	NO					
			22	15		60	NO					
55	12/20/73	35/354	23	-	1451	1/1000	YES	STS-3	CDR	1457:41	1501	F/16 HAND IN FRONT OF LENS.
			24	15	1452	10	YES					STARFIELD.
			25	15	1453	30	YES					STARFIELD.
			26	15	1454	60	YES					STARFIELD.
			27	15	1455	120	YES					STARFIELD.
			28	INF	1457:41	120	YES					COMET. CREW REPORTED FRAME COUNT 26.
56	12/21/73	35/355	29	15	0322	60	NO	STS-3	PLT	0324:04	0327	
			30	INF	0324:04	120	NO					
			31	15	AFTER 0326	60	NO					
57	12/21/73	36/355	32	15	1242	60	NO	STS-3	PLT	1243:55	1247	
			33	INF	1243:55	60	NO					
			34	15		60	NO					
58	12/22/73	36/356	35	15	0242	60	YES	STS-3	CDR	0243:42	0246	HAND OPERATED THIS SET. REMOTE
			36	INF	0243:42	60	YES					CABLE USED FOR S073. TERMINATED
			37	INF	0244:55	60	YES					BEFORE SUNRISE.
59	12/22/73	37/356	38	15	1335	60	NO	STS-3	CDR	1336:51	1339	3FR ONLY 1/3 TAIL NEAR HEAD VISIBLE
			39	15	1336:51	60	NO					DUE TO OUTSIDE STRUCTURE.
60	12/22/73	37/356	40	?	2256	60	YES	CM-1	SPT	2256:42	2259	2 FC/43. ONLY ONE SHOT.

TABLE XI. S233 OPERATIONAL SUMMARY (CONTINUED)

FUNCTIONAL OBJECTIVE	GMT CALENDAR DATE	MD/DOY	FRAME	FOCUS (FT)	GMT	EXPERIMENT TIME (SEC)	IMD	WINDOW	CREWMAN	COMET RISE	SUN RISE	REMARKS
60	12/23/73	37/357	41	15	0031?	60	NO	CM-1	SPT	00:30:30	0033	THREE PICTURES TAKEN NEXT ORBIT - NOT KNOWN SPECIFICS.
			42	INF(?)	0032?	60	NO					
			43	INF(?)	0032?	60	NO					
61	12/23/73	38/357	44	15	1428	60	NO	CM-1	CDR	1429:50	1432	NOT SURE OF POINTING. DID NOT SEE COMET.
			45	15	1429:50	60	NO					
62	12/24/73	38/358	46	15	0255	60	NO	CM-1	SPT	0256:20	0258	
			47	15	0256:20	60	NO					
63	12/24/73	39/358	48	15	1348	60	NO	CM-1	SPT	1349:31	1350:42	
			49	15	1349:31	60	NO					
64	12/25/73	39/359	50	15	0214	60	YES	CM-1	CDR	0215:58	0216:48	SUPER PICTURE IF NOT WIPED OUT BY SUNRISE (?).
			51	INF	0215:58	50	YES					
			52									BH05 PUT IN FILM VAULT ON MD 41/ DOY 360 AT 15:18 GMT.
			53									
			54									
			55									
			56									
			57									
			58									
			59									

TABLE XI. S233 OPERATIONAL SUMMARY (CONTINUED)

FUNCTIONAL OBJECTIVE	GMT CALENDAR DATE	MD/DOY	FRAME	FOCUS (FT)	GMT	EXPERIMENT TIME (SEC)	IMD	WINDOW	CREWMAN	COMET SET	SUN SET	REMARKS
66	1/8/74	54/008	01	15	2313	60	NO	STS-3	PLT	2319	2308	TIME IN QUESTION?
			02	INF		120	NO					
			03	15		60	NO					
68	1/10/74	55/010	04	15	0135	60	NO	STS-3	CDR	0147	0134	LOT OF LIGHT ON FIRST PICTURE.
			05	INF		120	NO					
			06	15		60	NO					
69	1/10/74	56/010	07	15	2324	60	NO	STS-3	CDR	2335	2321	FRAME COUNT 007, ANTICIPATES 2324 GMT PERF.
			08	INF	2325:20	120	NO					HAD IMD AT 1403 - OFF DUTY.
			09	15	23:27:40	60	NO					DAY - DID AT 2324 INSTEAD.
71	1/11/74	57/011	10	INF	1323	120	YES	STS-3	PLT	1336	1321	COMET.
			11	15		1/1000	YES					HAND IN FRONT F/16.
			12	15		10	YES					STARFIELD.
			13	15		30	YES					STARFIELD.
			14	15		60	YES					STARFIELD.
			15	15		120	YES					STARFIELD.
73	1/12/74	58/012	16	15	1243	60	YES	STS-3	CDR	1257	1241	
			17	INF		120	YES					
			18	15		60	YES					FRAME COUNT 19.
75	1/13/74	59/013	19	15	1210	60	YES	STS-3	CDR	1217	1203	
			20	INF		120	YES					
			21	15		60	YES					
76	1/14/74	59/014	22	15	0035	60	YES	STS-3	SPT	0044	0031	
			23	INF		120	YES					
			24	15		60	YES					
77	1/14/74	60/014	25	15	1304	60	NO	STS-3	SPT	1310	1259	
			26	INF		120	NO					
			27	15		60	NO					
78	1/14/74	60/014	28	15	2223	60	NO	STS-3	PLT	2230	2220	
			29	INF		120	NO					
			30	15		60	NO					
	1/30/74	76/030	31	INF	1258	180	NO	STS-4	CDR	1303	1257	COMET NEAR MOON - COULDN'T SEE IT.
			32	15		180	NO					
	1/30/74	76/030	33	INF	2044	180	YES	STS-4	SPT	2050	2043	NO REMOTE CABLE AVAILABLE. HAND OPERATED?
			34	15		180	YES					
	2/1/74	77/032	35	INF	0042	180	YES	STS-4	CDR	0050	0041	CREW FOUND COMET 3FR WITH BINOCULARS, BUT PHOTOS TAKEN 20° TO 25° OFF NORMAL TO WINDOW AND GOT REFLECTED MOON LIGHT.
			36	15		180	YES					
	2/1/74	78/032	37	INF	1441	120	NO	STS-4	PLT	1450	1440	
			38	15		120	NO					

TABLE XI. S233 OPERATIONAL SUMMARY (CONCLUDED)

FUNCTIONAL OBJECTIVE	GMT CALENDAR DATE	MD/DOY	FRAME	FOCUS (FT)	GMT	EXPERIMENT TIME (SEC)	IMD	WINDOW	CREWMAN	COMET SET	SUN SET	REMARKS
	2/2/74	78/033	39	15	0134:13	123	NO	STS-4	SPT	0144	0133	
			40	INF	01:37:07	123	NO					
	2/2/74	79/033	41	INF	1227	120	YES	STS-4	SPT	1237	1226	FRAME COUNT 41. FRAMES 41 THRU 45.
			42	15		60	YES					
			43	15		30	YES					
			44	15		10	YES					
			45			1/1000	YES					HAND IN FRONT OF LENS. F/16.
	2/3/74	79/034	46	INF	0052	120	YES	STS-4	PLT	0104	0051	FRAME COUNT 48.
			47	15		120	YES					
	2/4/74	80/035	48	INF	0011	120	YES	STS-4	PLT	0025	0010	EVA DAY.
			49	15		120	YES					FRAME COUNT 50.
	2/4/74	81/035	50	INF	1544	120	YES	STS-4		1559	1542	
			51	15		120	YES					
	2/5/74	81/036	52	INF	0103	120	YES	STS-4	PLT	0119	0102	FRAME COUNT 53.
			53	15		120	YES					
			54									
			55									
			56									
			57									
			58									
			59									

The problems were one double exposure, excessive background lighting from moon or sun, and smearing or loss of exposures due to pointing in the wrong direction.

G. T025 Coronagraph Contamination Measurements

The Principal Investigator for Experiment T025 is Dr. Mayo Greenberg, Dudley Observatory, Alabany, New York. The experiment developer was Martin Marietta Aerospace, Denver, Colorado.

1. Experiment Description.

a. Objectives. The scientific objectives were to obtain ultraviolet and visible bandpass photography of the coma and tail near perihelion.

b. Concept. The data was to be studied to understand the particulate production rates and spatial distribution of OH, CN, C_2, Na, NH, CO molecular components of the coma and tail.

This data was to be obtained through a set of selected filters which were centered on desired emission line wavelengths. The T025 equipment was ideally suited to photograph Comet Kohoutek for a nine-day period centered on the time of minimum elongation. The scientific benefit of near perihelion imagery was important in that the solar radiation pressure, solar wind, and solar tidal forces were acting on the head and tail of the comet. Photographs of the comet's reactions to these forces could help determine their magnitude and time scale interaction.

c. Hardware Description. The experiment canister assembly, (see figure 15) in its original design configuration at the SAL, was used to house the occulting disc assembly and the view window. The quartz view window provided the interface between the space environment and the camera lens. It permitted light passage down to approximately 1800 Å. The occulting disc assembly was used to occult the solar disc. The extension boom assembly served to extend the occulting disc assembly.

A Nikon Camera with the UV lens and a filter holder was inserted. The UV lens focal length adapter allowed hard focusing down to 28 inches. The neutral density filter was inserted during direct sighting on the sun.

The hardware was modified for EVA sequences. These modifications included changing the T025 occulting disc and the addition of an EVA mount (see figure 16). T025 filters, which were contained in four filter holders A, B, C and D, are shown in table XII.

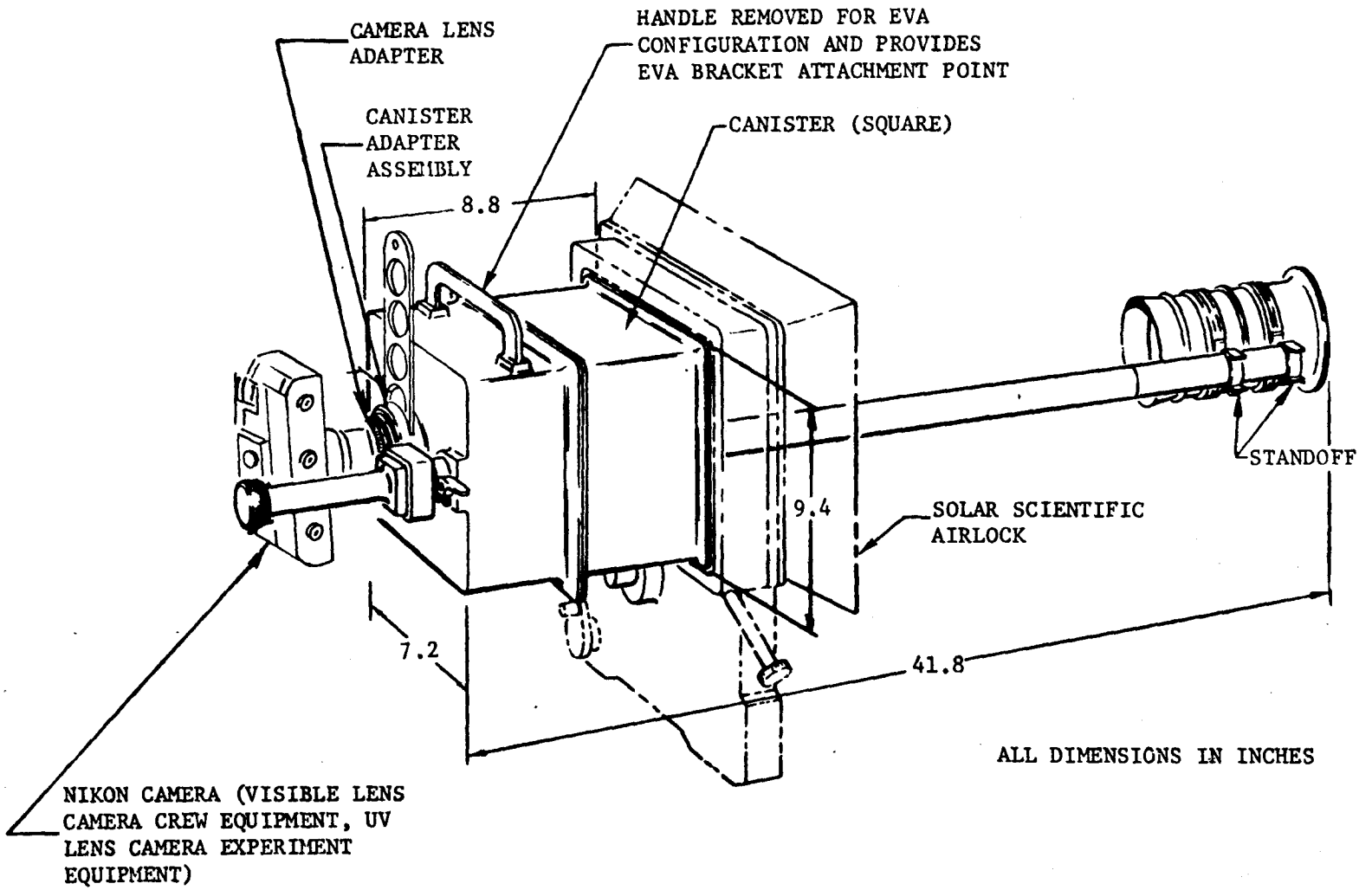

FIGURE 15. CORONAGRAPH CONTAMINATION MEASUREMENT ASSEMBLY

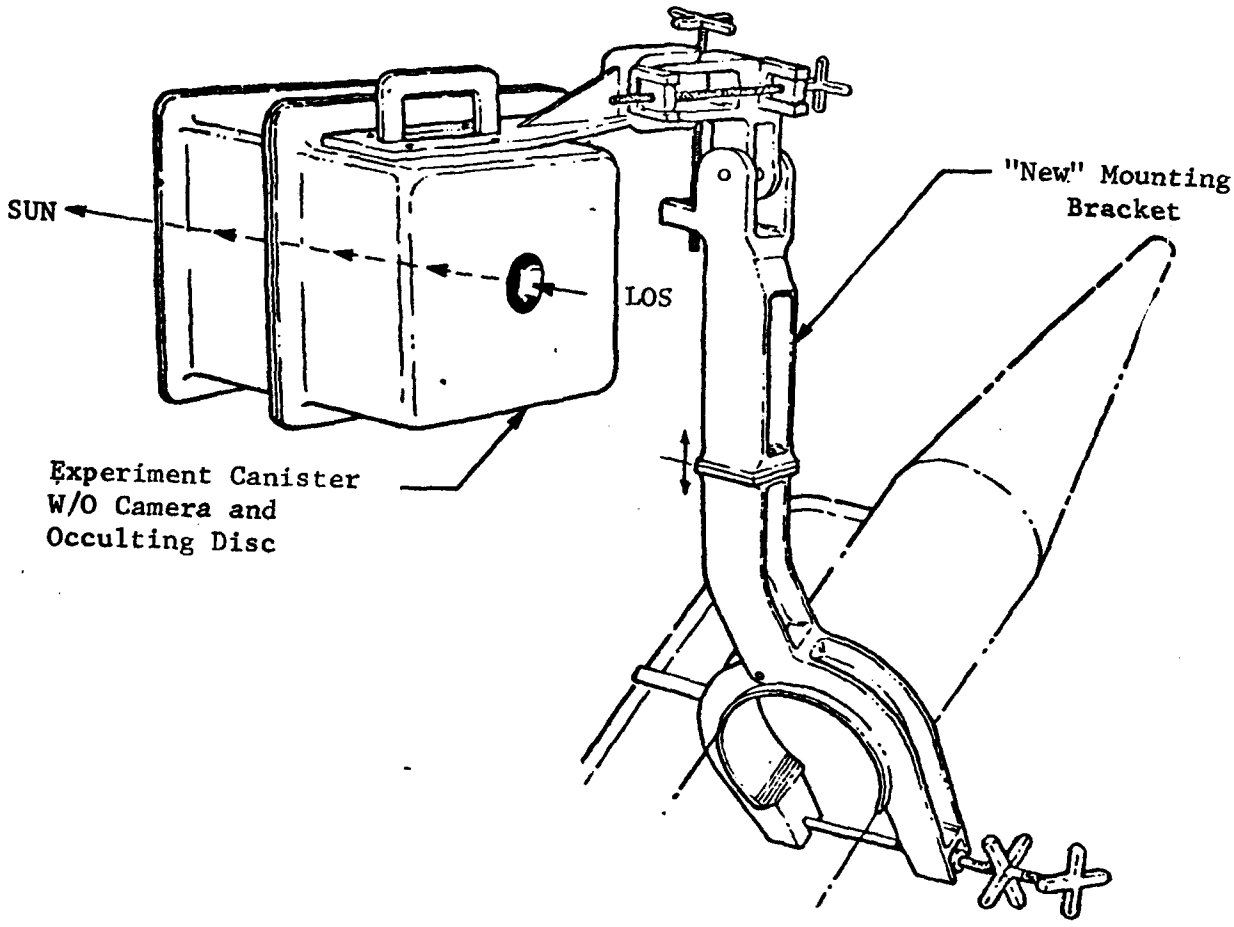

FIGURE 16. T025 MOUNTING BRACKET

2. Experiment Operations. T025 was performed for ~ 50 minutes on December 25 and December 29 during the daylight portion of the EVAs taking 40 exposures each time.

TABLE XII. T025 FILTER CHARACTERISTICS

Filter	Filter No.	Wavelength Å	Bandpass Å
1	A2	2530	115
2	B2	2800	200
3	C3	3100	60
4	B1	3250	60
5	A4	3361	30
6	A3	3600	200
7	C1	3873	30
8	D2	3940	30
9	D1	4262	20
10	B3	4430	100
11	C2	4700	60
12	D3	4900	60
13	B4	5500	200
14	D4	5890	30
15	C4	6000	1 Short Pass
16	A1	Blank	

The pointing was acquired using a new occulting disc with a special long pass 6000 Å filter mounted in the center to allow the astronaut to view the sun. T025 comet observations are illustrated in table XIII.

3. Constraints. The experiment constraints were successfully met during the mission.

4. Hardware Performance. Hardware performance is in reference [1].

5. Experiment Interfaces. Experiment interfaces performed satisfactorily.

6. Return Data. All T025 film used for the comet was returned.

7. Anomalies. None of the T025 comet photos were in focus due to a focusing problem with Nikon Camera NK02. The NK02 problem is discussed in reference [1].

TABLE XIII. T025 OPERATIONAL SUMMARY

12/25/73 EVA MD40/DOY 359 NIKON 02,F/2.0

FRAME	FILTER PLANNED	FILTER ACTUAL	PLANNED EXPOSURE (SEC)	ACTUAL TIMES START	ACTUAL TIMES EXPOSURE	REMARKS
01	A1	A1	1/25	18:11:21	1/125	FIRST FRAME IS 127
02	A1	A1	1/1000	18:11:37	1/1000	EXPOSURES OF 1 SECOND OR LESS WERE PERFORMED BY CAMERA SETTINGS, OTHERS WERE MANUALLY TIMED.
03	A2	A2	80	18:12:17	80	
04	A2	A2	10	18:14:08	10	
05	A3	A3	1/2	18:14:30	1/2	
06	A3	A3	1/15	18:14:50	1/15	
07	A4	A4	14	18:15:11	14	
08	A4	A4	02	18:15:39	2	
09	C1	C1	14	18:17:45	14	
10	C1	C1	02	18:18:17	2	
11	C1	C1	1/4	18:18:45	1/4	
12	C2	C2	02	18:20:01	2	
13	C2	C2	1/4	18:20:15	1/4	
14	C3	C3	14	18:20:45	14	
15	C3	C3	02	18:21:09	2	
16	C3	C3	1/4	18:21:20	1/4	
17	C4	C4	1/30	18:21:40	1/30	
18	C4	C4	1/250	18:21:50	1/250	
19	C4	C4	1/1000	18:21:59	1/1000	
20	B1	B1	14	18:24:09	14	
21	B1	B1	02	18:24:37	2	
22	B1	B1	1/4	18:24:45	1/4	CDR COMMENTED THAT THE BOOM (T025) IS VERY, VERY STEADY WITH NO OBSERVABLE OSCILLATION.
23	B2	B2	07	18:26:21	7	
24	B2	B2	1	18:26:50	1	
25	B3	B3	02	18:27:11	2	
26	B3	B3	1/4	18:27:25	1/4	
27	B4	B4	1/2	18:27:40	1/2	
28	B4	B4	1/16	18:27:59	1/16	PAD REQUESTED 1/16; THERE IS NO 1/16 SETTING, SO THE CAMERA WAS SET TO 1/15.
29	D1	D1	07	18:30:13	7	
30	D1	D1	1	18:30:30	1	
31	D2	D2	14	18:30:59	14	
32	D2	D2	02	18:31:26	2	
33	D2	D2	1/4	18:31:39	1/4	
34	D3	D3	02	18:32:08	2	
35	D3	D3	1/4	18:32:21	1/4	
36	D4	D4	04	18:32:45	4	
37	D4	D4	1/2	18:33:00	1/2	
38	C1		14	18:35:28	14	
39	C1		02	18:35:53	2	
40	C1		1/4	18:36:10	1/4	

TABLE XIII. T025 OPERATIONAL SUMMARY (CONCLUDED)

12/29/73 EVA, MD44, DOY 363 NK02, F/2.0

FRAME	FILTER PLANNED	FILTER ACTUAL	PLANNED EXPOSURE (SEC)	ACTUAL TIMES START	ACTUAL TIMES EXPOSURE	REMARKS
01	A1	A1	1/125	18:26:34	1/125	F STOP AT 2.0 FOR ALL EXPOSURES.
02	A1	A1	1/1000	18:26:45	1/1000	EXPOSURES OF 1 SECOND OR LESS WERE PERFORMED BY CAMERA SETTINGS OTHERS WERE MANUALLY TYPED.
03	A2	A2	80	18:27:25	80	
04	A2	A2	10	18:29:06	10	
05	A3	A3	1/2	18:29:55	1/2	
06	A3	A3	1/15	18:30:13	1/15	
07	A4	A4	14	18:31:22	14	
08	A4	A4	02	18:31:50	02	
09	C1	C1	14	18:33:32	14	
10	C1	C1	02	18:34:01	02	
11	C1	C1	1/4	18:34:31	1/4	
12	C2	C2	02	18:34:57	02	
13	C2	C2	1/4	18:35:19	1/4	WAITED FOR BOOM TO STOP OSCILLATING PRIOR TO FRAME 13.
14	C3	C3	14	18:36:02	14	
15	C3	C3	02	18:36:25	02	
16	C3	C3	1/4	18:36:48	1/4	
17	C4	C4	1/30	18:37:30	1/30	
18	C4	C4	1/250	18:37:49	1/250	
19	C4	C4	1/1000	18:38:06	1/1000	
20	B1	B1	14	18:40:12	14	
21	B1	B1	02	18:40:36	02	
22	B1	B1	1/4	18:41:10	1/4	
23	B2	B2	07	18:41:48	08	
24	B2	B2	01	18:42:15	01	
25	B3	B3	02	18:42:36	01	FRAME 25 REPEATED AT 18:43:29, 2 SECOND EXPOSURE.
26	B3		1/4			NO TRANSCRIPTS FOR FRAMES 26 THROUGH 28.
27	B4		1/2			
28	B4		1/15			
29	D1	D1	07	18:46:48	07	
30	D1	D1	01	18:47:08	01	
31	D2	D2	14	18:47:42	14	
32	D2	D2	02	18:48:13	1/2	
33	D2	D2	1/4	18:48:44	1/4	
34	D3	D3	02	18:49:38	02	
35	D3	D3	1/4	18:49:17	1/4	
36	D4	D4	04	18:50:12	04	
37	D4	D4	1/2	18:50:37	1/2	
38	C1	C1	14	18:52:12	14	
39	C1	C1	02	18:52:37	02	
40	C1	C1	1/4	18:53:20	1/4	SPT CHECKED ALIGNMENT AND NOTED THAT IT APPEARED GOOD.

H. S052 - White Light Coronagraph

The Principal Investigator for Experiment S052 is Dr. Robert MacQueen, High Altitude Observatory, Boulder, Colorado. The experiment developer was Ball Brothers Research Corporation, Boulder, Colorado.

1. Experiment Description.

a. Objectives. The scientific objectives were to obtain:

Polarization and morphological variation of the coma and tail at minimum elongation (1 day before perihelion);

Measurement of the solar wind at the comet; and

Observations of coma and tail, preperihelion and postperihelion.

b. Concept. Data to be obtained would provide the comet density structure and its evolution over a several week period, and provide determination of the comet tail mass changes near the perihelion passage. Fluctuations in the solar wind could produce changes in the comet's tail. Observations of these changes could provide information on the solar wind propagating past the comet at 30 solar radii, in a region inaccessible to earth-orbiting solar wind probes. The S052 equipment had the advantage of being a visible solar coronagraph operating outside of the Earth's atmosphere, which provided high contrast photography, when the comet was near the sun.

c. Hardware Description. The S052 coronagraph was designed to block the sun's disc image (see figure 17) and to take pictures of the faint corona which extends from the sun far into space. Light scattering by optical elements and by structural surfaces was carefully avoided. The instrument contained four coaxial occulting discs and photodetectors for alignment corrections. Pictures were recorded on film and were taken either in polarized or unpolarized light. The instrument operated in a video mode which permitted display for the astronauts or television (TV) transmission to the ground. The data was recorded on 35mm film. The ATM experiments' arrangement in the canister is shown in figure 18.

2. Experiment Operations. Three automatically-programmed film-exposure modes were used. The standard (STD) mode, exposed a set of 9, 27, and 3-second frames in each of three polaroid filter orientations and in one clear (non-filtered) position in a 5.5 minute automatic operation. The continuous (CONT) mode exposed a set of 9, 27, and 3-second frames every 82.5 seconds until stopped. The FAST SCAN mode used the clear (unfiltered) position and took 72 frames of 27, 3, and 9-seconds for 16.2 minutes duration.

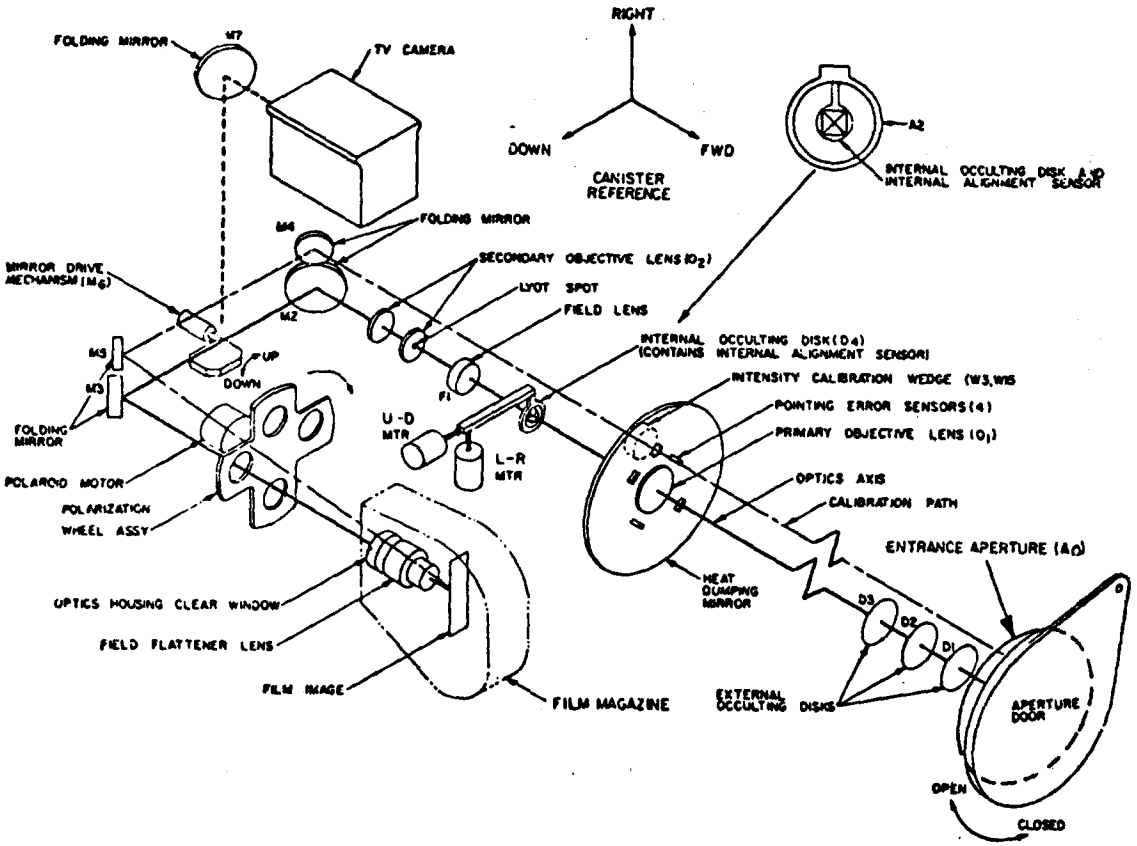

FIGURE 17. S052 CORONAGRAPH

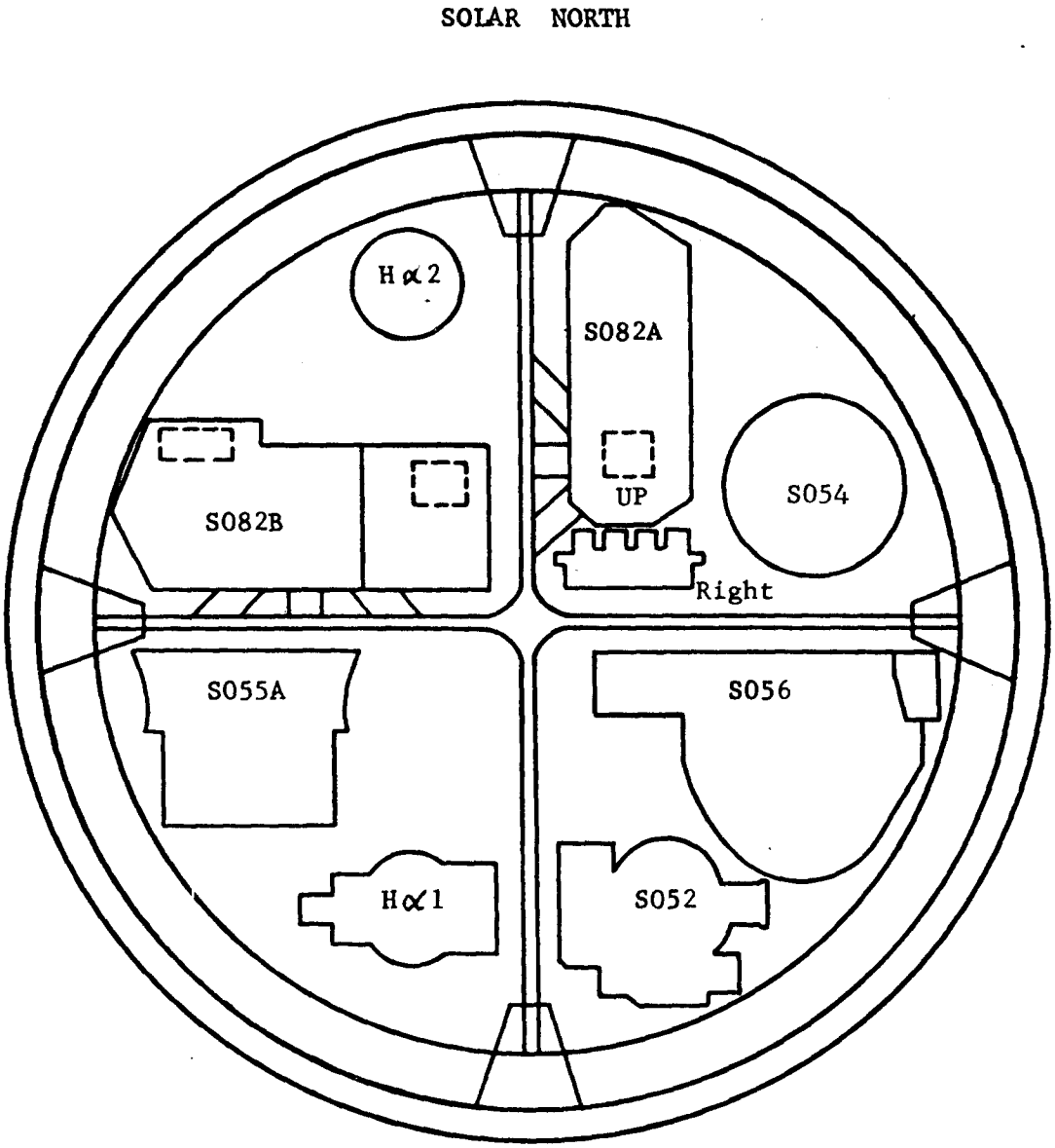

FIGURE 18. ATM CANISTER, EXPERIMENT ARRANGEMENT

The S052 observations are contained with other ATM operations on table XIV. Option A was defined as a STD mode, followed by two minutes of monitoring the WLC, the three single one second exposures, followed by Continuous FAST SCAN Repetitions. Option B was defined as three single one second exposures, followed by Continuous FAST SCAN Repetitions. Option C was defined as initiate FAST SCAN, START, then STOP when OPERATE LIGHT ON, followed by one exposure every five minutes.

3. Constraints. The experiment constraints were satisfactorily met during the mission.

4. Hardware Performance. The hardware performance is covered in reference [3].

5. Experiment Interfaces. Experiment interfaces are in reference [3].

6. Return Data. All the comet-related S052 exposed film was returned for data evaluation (~1600 exposures).

7. Anomalies. No major operational problems were experienced while viewing the comet.

I. S054 X-Ray Spectrographic Telescope

The Principal Investigator for Experiment S054 is Dr. G. Vaiana, American Science and Engineering, Inc. (AS&E), Cambridge, Massachusetts. The experiment developer was AS&E.

1. Experiment Description.

a. Objectives. The scientific objectives were to obtain x-ray absorption spectra of the comet tail and X-ray fluorescence imagery of the coma.

b. Concept. The data to be obtained is expected to reveal the total mass density along the line-of-sight of medium weight elements (such as carbon, nitrogen, and oxygen). A cross-section computation of the tail could be computed if the tail passed in front of an x-ray source by measuring the absorption as a function of position. X-ray fluorescence from the comet, during high solar activity periods, may provide an image of the head in soft x-rays. A slitless x-ray spectrum could provide concentration of such elements as Si, Al, Mg, O, and possible C. The observations were unique and exploratory in nature.

c. Hardware Description. The experiment configuration (see figure 19) consisted of an x-ray spectrographic telescope and a camera.

TABLE XIV. ATM OPERATIONAL SUMMARY

PERFOR-MANCE	GMT CALENDAR DATE	MD/DOY	CYCLE	GMT COMET VISIBLE FROM	GMT COMET VISIBLE TO	S052 MODE	S052 NO. OF FRAMES	S054 MODE	S054 NO. OF FRAMES	S054 EXP. TIME (MIN)	S056 MODE	S056 NO. OF FRAMES	S056 EXP. TIME	S082B MODE	S082B NO. OF FRAMES	S082B EXP. TIME	S055 MODE	S055 TIME GRATING POSITION	S055 TIME TIME	H-ALPHA-I	START BB-30 TIME	COMET FEATURE	REMARKS
1	12/19/73	34/353	512	15:39	16:34	OPTIONAL FAST SCAN	15					2		ST	1	0:10	MAR	0676	15	0	ASAP	NUCLEUS	ANTARES USED AS TARGET, CREW DID NOT SEE COMET IN DISPLAY.
2	12/19/73	34/353	513	17:12	18:07		0				S FR 3	2	27:00	ST LG	2	20:00 7:00		0		0	17:16	NUCLEUS	
3	12/21/73	36/355	543	15:52	16:42		16					0		LG LG LG	3	4:00 12:00 ALAP	MAR	0678	55	58	16:25	NUCLEUS	SPT REPORTED HE COULD NOT SEE ANYTHING ON H-α DISPLAY. ALAP- AS LONG AS POSSIBLE.
4	12/21/73	36/355	544	17:25	18:19		0				S FR 3	2	ALAP	ST ST	3	10:00 27:00 00:05	MAR	0678	37	0	17:29		555 REPORTED NO LYMAN α INDICATION.
5	12/23/73	38/357	576	19:11		OPTIONAL FAST SCAN	87				S FR 3	2	15:00	ST ST	2	00:05 15:00	MAR	0678	16	0	19:13	NUCLEUS	CREW REPORTED FINAL ATTITUDE X OFF BY 0.1°, Y AND Z OFF BY APPROXIMATELY .05°
6	12/23/73	38/357	576		20:05	OPTIONAL FAST SCAN WAS STD AND TRUNCATED)	87				S FR 4	2	23:00	LG LG LG	3	1:00 5:00 20:00	MAR	0678	34	0	19:31	TAIL	CREW REPORTED A STAR APPROXIMATELY 0.8° FROM COMET, GROUND IDENTIFIED IT LATER AS PLANET MERCURY.
7	12/23/73	38/357	577	20:44		OP. C	10				S FR 3	7	25:00	ST ST	2	5:00 20:00	MAR	0678	16	0	20:49	NUCLEUS	JOP18A GROUND NOTED S082B WAS IN LONG WAVELENGTH AT START OF SEQUENCE; SPT CORRECTED AND FUTURE PAD MODED 30, A, B, C, ETC.
8	12/23/73	38/357	577		21:38	OP. C	10				S FR 1	7	ALAP	ST ST	3	20:00 00:05	MAR	0678	34	0	21:19	TAIL	JOP18A CREW NOTED COMET AND MERCURY MAG:-.3 APPEARED COMPARIABLE BRIGHTNESS.
9	12/24/73	39/358	591	18:30		OPTIONAL FAST SCAN (15)	9				S FR 3	2	25:00	ST ST	2	00:05 25:00	MAR	0678	25	0	18:33	MAXIMIZE HEAD & TAIL	JOP18A SPT REPORTED COMET TAIL OBSERVED IN WLC DISPLAY.
10	12/24/73	39/358	591		19:25	OP. C	10				S FR 4	2	19:00	LG LG ST	3	21:00 5:00 12:30	MAR	0676	24	0	19:03	NUCLEUS	JOP18B COMPENSATION MANEUVERS MADE AT 1920, 1940 AND 2000. S052 EXPOSURES WERE ROUGHLY EVERY 5 MINUTES.
11	12/24/73	39/358	592	20:04	20:58	OP. C	10				S FR 3LG	2	45:00	LG LG LG	3	45:00 00:20 00:05	MAR	0676	50	0	20:05	NUCLEUS	JOP18C: COMPENSATE VEHICLE FOR MOTION EVERY 20 MINUTES.
12	12/27/73	41/361	628			STD, 5.5 MIN.	12	MSOS256	8	6											04:23		JOP18AU, U2: S055 TIME DETERMINED BY GROUND STOP COMMAND OR AUTO STOP OCCURS AT E-SUN TERMINATOR.
13	12/27/73	41/361	629				0		0														JOP18AU, U2
14	12/27/73	41/361	629			STD, 5.5 MIN.	12	MSOS256	8	6													JOP18AU, U2
15	12/27/73	41/361	630			STD, 5.5 MIN.	12	MSOS256	8	6													JOP18AU, U2
16	12/27/73	41/361	631			STD, 5.5 MIN.	12	MSOS256	8	6													JOP18AU, U2
17	12/27/73	41/361	632			STD, 5.5 MIN.	12	MSOS256	8	6													JOP18AU, U2
18	12/27/73	42/361	633			STD, 5.5 MIN.	12	MSOS256	8	6							MAR		43				JOP18AU, U1
19	12/27/73	42/361	633														MAR		7				JOP18AU, U1
20	12/27/73	42/361	634				15	MSOS256	8	APPROX. 9	S FR 2	1	8:00				MAR	0000	9	14	13:24		JOP18A: SPT COMMENTED THAT S056 RECEIVED AN EXTRA S FR 4 OF 12 MIN.
21	12/27/73	42/361	634								S FR 2	2	10:00				MAR	0574 0575	34	41	13:39		SPT NOTED THAT PROBLEMS WITH MPC FEEDBACK READING LAGGING INPUT. JOP18A: S082A, 2 FR, LG 4:00 + 27:00 EXP.
22	12/27/73	42/361	635				15				S FR 4 S FR 2	3	8:00 9-10:00							14	15:01		JOP18A: COMET DESCRIBED AT APPROXIMATELY 2 SOLAR RADII WITH THE TAIL STANDING OUT QUITE A BIT AND A VERY STRONG COMA.
23	12/27/73	42/361	635				0	MSOS256	8		S FR 2	2	10:00		1	32:00	MAR	0576 0303	32	41	15:36		JOP18A: S082A, 1 FR, 32:00 EXP. SPT NOTED IMPROVED MPC TECHNIQUE.
24	12/27/73	42/361	636				15	MSOS256	8	6	S FR 2	3	2:00				MAR	2166	14	14	16:32		JOP18A:
25	12/27/73	42/361	636				0		0		S FR 4 S FR 5		10:00 10:00	ST ST	2	10:00 23:50	GAS	N/A	35	41	16:39		JOP18A: S082A 2 FR, -ST (10:00 EXP), -LG (23:50 EXP.)
26	12/27/73	42/361	637			OPT B (MODE COUNT TO 2 TR.)	98	MSOS256 MSO664	16 70	6 32	S FR 2		12:00				MAR	SEE RMKS	55	55	18:05		JOP18A: S55: GRAT0200, 0426, 0766, S052 INTERRUPTED FOR 45 SECONDS VTR DATA.
27	12/27/73	42/361	638			OPT A	98	MSOL64	112	4 REPS 13 MIN. EACH	S FR 4	2	12:00				MAR	SEE RMKS	55	55	19:38		JOP18A: S55 MAR DET ALL, GRAT0000, 2665, 2989, GRAT SET PROBLEM OCCURRED.

TABLE XIV. ATM OPERATIONAL SUMMARY (CONTINUED)

PERFOR-MANCE	GMT CALENDAR DATE	MD/DOY	CYCLE	GMT COMET VISIBLE FROM	GMT COMET VISIBLE TO	S052 MODE	S052 NO. OF FRAMES	S052 MODE	S054 NO. OF FRAMES	S054 EXP. TIME (MIN)	S056 MODE	S056 NO. OF FRAMES	S056 EXP. TIME	S082B MODE	S082B NO. OF FRAMES	S082B EXP. TIME	S055 MODE	S055 TIME GRATING POSITION	S055 TIME TIME	H-ALPHA-1	BB-30 TIME	COMET FEATURE	REMARKS
28	12/27/73	42/361	639			OPT B	98	MSOL64	84	3 REPS 13 MIN. EACH	S FR 1	2	10:00				MAR	SEE RMKS	55	55	21:11		JOP18A: S55, GRAT 0000, 0162, 1042, 2665 S052 WAS INTERRUPTED FOR 5 MIN. VTR DOWN.INK.
29	12/27/73	42/361	640			OPT A (MONT CONT TO 6 T.R)	97	MSOL64	105	- 51	S FR 5	2	12:00				MAR	SEE RMKS	55	55	22:45		JOP18A: S55 GRAT 1200, 1423, 2897, COMET DISAPPEARED FROM WLC DISPLAY NO READING ON XUV MONITOR.
30	12/28/73	42/362	641				27		34		S FR 2	2	12:00				MAR	2999	15	15	00:18		JOP18A: S55 0342;52, 54, 55 UNA. OPS.
31	12/28/73	42/362	643			STD, 5.5 MIN.	12	MSQS256	8	6							MAR	0000			03:42		JOP18AU, U1
32	12/28/73	42/362	643			FAST, 16.2 MIN	72		8	6							GAS		15				JOP18AU, U2
33	12/28/73	42/362	644				0		0								GAS		22				JOP18AU, U2
34	12/28/73	42/362	644				0	MSQS256	8	6							GAS		13				JOP18AU, U2
35	12/28/73	42/362	644			FAST, 16.2 MIN.	72		9	6							GAS		20				JOP18AU, U2
36	12/28/73	42/362	646			STD, 5.5 MIN.	12		8	6							GAS		6				JOP18AU, U2
37	12/28/73	42/362	646			FAST, 16.2 MIN.	72		0								GAS		46				
38	12/28/73	42/362	647			STD., 5.5 MIN.	12	MSOS256	8	6							GAS		6				
39	12/28/73	42/362	647			FAST, 16.2 MIN.	72		0								GAS		49				
40	12/28/73	42/362	648				0		0								GAS		5				
41	12/28/73	42/362	648			STD., 5.5 MIN.	12	MSOS256	8	6							GAS		6				
42	12/28/73	42/362	648			FAST, 16.2 MIN.	72		0								GAS		44				
43	12/28/73	42/362	649				0		0								GAS		10				
44	12/28/73	42/362	649			STD., 5.5 MIN.	12	MSOS256	8	6							GAS		15				
45	12/28/73	42/362	636			FAST, 16.2 MIN.	72	MSOS256	8	6							GAS		30				
46	12/28/73	42/362	636				15		0		S FR 2	2	10:00	ST ST		00:05 20:00	MAR	0676	21		23:53		JOP18C: SPT PICKED COMET UP AT X MINUS 140 (96°) AND Y MINUS 20 (16°). HE NOTED THE COMA TO BE EXCEPTIONALLY BRIGHT AND THE TAIL TO HAVE FANNED OUT AND A FAINT SUNWARD SPIKE.
47	12/29/73	43/363	636	23:33	00:31		28				S FR 3	2	20:00	ST ST	2	3:00 15:00	MAR	0676 0677	34		00:24		JOP18C: SPT POINTED OUT NO SUCCESS AT EITHER H-α OR XUV MONITORS.
48	12/29/73	43/363	637	01:07	02:05		0				S FR 3	2	20:00	LG	3	00:05 00:20 1:40 8:00 20:35	GAS		40		01:41	NUCLEUS	JOP18C: SPT NOTED XUV COUNTS BETWEEN 5-10.
49	12/29/73	43/363	638	02:40	03:38		0				S FR 3	2	20:00 0:05	LG	1	20:00	GAS		40		03:04		JOP18C: MANEUVER PROBLEM, DATA TAKE STARTED 25 MINUTES LATER THAN PAD.
50	12/30/73	44/364	673	01:59	02:36	OPT A, FAST SCAN	23				S FR 3	2	13:00	ST	2	00:05 12:00	MAR	0676	23		02:02		
51	12/30/73	44/364	673	01:59	02:36	OPT. C	33				S FR 4	2	30:00	LG ST	6	30:00 1:00 5:00 5:15 0:05	MAR	0676	25		02:23	NUCLEUS	
52	12/30/73	45/364	681	14:25	15:22	OPT. C	54	MSOS1 LG	4	40:00	S FR 3	2	42:00	ST	5	0:05 1:00 6:00 35:00	MAR/ GAS	0676 0677	50		14:29	NUCLEUS	S055 GRATING WAS ONE NOTCH OFF PAD. POINTING PLACED COMET BEHIND BAR ON WLC. S082B DOOR WAS CLOSED FOR APPROX. 10 MIN.
53	12/30/73	45/364	682	15:58	16:22	OPT. C	54				S FR 4	2	40:00	ST	5	6:00 14:00 28:00	MAR/ GAS	0676 0677	50		16:02	PLASMA TAIL	

TABLE XIV. ATM OPERATIONAL SUMMARY (CONCLUDED)

PERFOR-MANCE	GMT CALENDAR DATE	MD/DOY	CYCLE	GMT COMET VISIBLE FROM	GMT COMET VISIBLE TO	S052 MODE	S052 NO. OF FRAMES	S054 MODE	S054 NO. OF FRAMES	S054 EXP. TIME (MIN)	S056 MODE	S056 NO. OF FRAMES	S056 EXP. TIME	S082B MODE	S082B NO. OF FRAMES	S082B EXP. TIME	S055 TIME GRATING MODE	S055 TIME GRATING POSITION	S055 TIME GRATING TIME	H-ALPHA-1	START BB-30 TIME	COMET FEATURE	REMARKS
56	12/30/73	45/364	683	17:32	18:29	OPT. A	66					0		ST	2	6:00 ALAP	MAR/ GAS	0676 0677	50		17:36	TAIL	
55	12/30/73	45/364	686	22:12	23:08	OPT. C	6				S FR 4	2	37:00	ST	1	37:30	MAR/ GAS	0676 0677	40		22:16	TAIL	
56	12/30/73	45/364	687	23:45	00:42	OPT. B, FAST MODE	3					0		ST	1	20:00	MAR	0676			23:49		
57	12/31/73	45/365	687			OPT. C, SCAN MODE	3					0		LG	2	1:30 8:00	GAS		16		00:00	NUCLEUS	S052 READY LIGHT OFF INADVERTANTLY.
58	12/31/73	45/365	687			OPT. C	3					0		LG ST	2	5:00 8:00	GAS		23		00:22	NUCLEUS	
59	12/31/73	46/365	697	15:17	16:14		0	MSOS1 LG	4	43:25	S FR 2	2	43:25	LG	5	00:05 00:20 1:20 6:00 35:20	MAR	0676 0677 0678	50		15:21	TAIL	UNCERTAINTY IN POINTING EXP.
60	12/31/73	46/365	698	16:50	17:47		0					0		LG	5	00:05 00:20 1:20 6:00 36:00	MAR	0676 0677 0678	50		16:54	NUCLEUS	
61	12/31/73	46/365	699	18:24	19:21	STD., 3 SINGLES, FAST SCAN	67					0		ST	2	37:36 00:05	MAR	0676 0677 0678			18:28	NUCLEUS	
62	12/31/73	46/365	702	23:04	00:01							0		ST	5	0:05 1:00 8:00 ALAP 0:05	MAR	0676 0677 0678	55		23:08	NUCLEUS	CREW NOTED COMET WAS EXTREMELY FAINT IN WLC DISPLAY.
63	1/1/74	47/001	717	22:23	23:19	OPT. A, CONT (8:30)	27					0		ST	2	00:05 25:00	MAR	0676	22		22:27	TAIL	OBTAINED 3 EXTRA S052 SINGLE FRAMES.
64	1/1/74	47/001	717				0				S FR 2	2	16:15	ST	3	15:00 13:00	MAR	0676	33		22:52	NUCLEUS	
65	1/1/74	47/001	718	23:56	00:53		0					0		LG	5	00:25 1:30 8:00 27:00 30:00 0:05	MAR	0676	55		23:59	NUCLEUS	OPERATIONS WERE NOT STARTED AT BEGINNING OF ORBIT, DUE TO VEHICLE MANEUVERING.
66	1/3/74	49/003	747	21:00	21:58	OPT. A, CONT (8:00)	41					0		ST	2	0:05 25:00	MAR	0676	25		21:04		COMET JUST BARELY VISIBLE ON WLC DISPLAYS; APPEARED AS MOVING NOISE ON SCREEN.
67	1/3/74	49/003	747				0	MSOS1 LG	4	15:00	S FR 2	2	16:00	ST	1	16:00	MAR	0676	25		21:33	TAIL	
68	1/3/74	49/003	748	22:33	23:31		0					0		LG ST	6	1:00 5:00 24:00 ALAP 00:05	MAR	0676	50		22:37	NUCLEUS	
69	1/5/74	51/005	774	14:58	15:57	OPT. C, (6:00)	5	GRAT OUT	8	37:00	S FR 2	2	37:00	ST LG ST	5	0:05 17:00 3:00 17:00 0:05	MAR	0676 0677 0678	41		15:16	NUCLEUS	COMET STILL VISIBLE ON WLC DISPLAY.
70	1/6/74	52/006	795	23:36	00:38	OPT. C.	4				S FR 3	2	49:00	ST LG ST	3	0:05 20:00 29:00	MAR	0676 0677 0678	46		23:44	NUCLEUS	VENUS USED AS PTG AID. SFT REPORTED THE PLANNED S054 WAS MISSED.
71	1/7/74	52/007	796	01:09	02:11	OPT. C	4					0		ST	2	ALAP 00:05	MAR	0677	50		01:13		

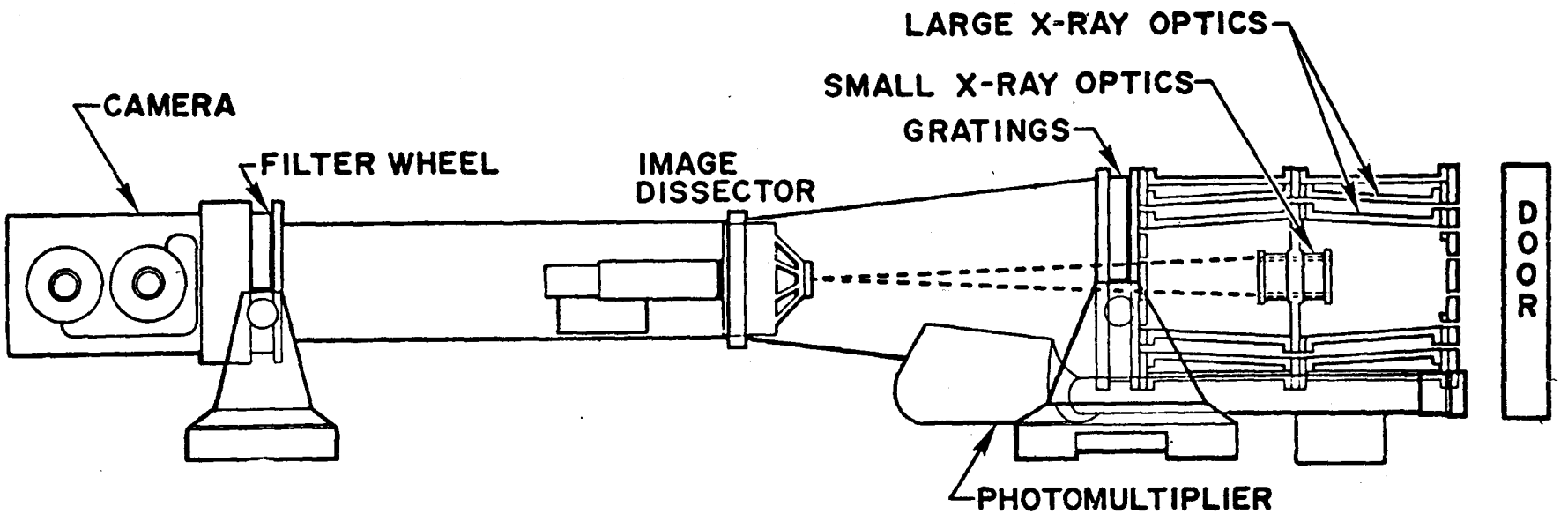

FIGURE 19. S054 X-RAY SPECTROGRAPHIC TELESCOPE

The x-ray spectrographic telescope optics section consisted of two concentric grazing-incidence mirrors. This tested configuration provided an increased mirror aperture for collecting x-ray energy.

The grazing incidence optics central area was used for x-ray alarm and astronaut TV sensing.

Directly behind the grazing incidence optics, there was a transmission grating that produced x-ray spectroheliograms to control the amount of x-ray energy at the camera. The grating could be moved out of the optical path when desired.

The telescope was equipped with a 70mm camera. Exposure time of the camera was variable from 1/64 to 256 seconds.

2. Experiment Operations. S054 was operated preperihelion and postperihelion, with its incidence of operation highest when the comet was near perihelion on the far side of the sun in the hope of detecting x-ray fluorescence from cometary material. A summary of the operations is presented in table XIV for which the following definitions apply:

MSOS 256 - (M) Manual Mode, (S) Filter in Storage; the filter storage was the same as Position 1, which sensed 3.5 to 18 Å, (0) Grating out, (S) Picture Rate Single, (256) Exposure Range, eight exposures in six minutes.

M30S 256 - Same as above, except (3), Filter 3 selected. Filter 3 position was blank and the experiment sensed 3.5 to 20 Å and 28 to 60 Å.

MSOL 64 - (M) Manual Mode, (S) Filter in Storage, (0) Grating Out, (L) Picture Rate Low, (64) A cycle of seven exposures in three minutes repeated four times in 13 minutes. This entire exposure cycle repeated up to four times.

MSOS 1 - (M) Manual Mode, (S) Filter in Storage, (0) Grating Out, (S) Single Picture Rate, (1) Exposure range, four exposures in 2.5 sec, last exposure remains open for duration of pass.

3. Constraints. The experiment constraints were successfully met during the mission.

4. Hardware Performance. Hardware performance is covered in reference [3].

5. Experiment Interfaces. Experiment interfaces are contained in reference [3].

6. Return Data. All the comet-related S054 exposed film was returned for data evaluation.

7. Anomalies. No major operational problems were experienced while viewing the comet. A shutter problem is discussed in reference [3].

J. S055 UV Scanning Polychromator - Spectroheliometer

The Principal Investigator for Experiment S055 is Dr. Edward M. Reeves, Harvard College Observatory, Cambridge, Massachusetts. The experiment developer was Ball Brothers Research Corporation, Boulder, Colorado, under contract to Harvard College Observatory.

1. Experiment Description.

a. Objectives. The scientific objectives were to obtain:

High resolution ultraviolet maps of the coma near perihelion;

Spectral scans of C, N, S, and H_2; and

Lyman-alpha emission with S201.

b. Concept. The data to be obtained would provide information on the hydrogen emission simultaneously in H-Lyman-alpha, -beta, and -gamma lines and the Lyman continuum giving data on the comet's hydrogen halo radiance. Molecular systems of other neutral and ionized species have bands in the extreme ultraviolet below the 1350 Å upper limit of the S055 instrument. The observations could complement ground based cometary observations in determining structure and excitation mechanisms. The cometary nucleus spectra could yield unexpected new lines in the region 296 Å to 1350 Å, in addition to the expected data from lines such as Lyman-alpha, and -beta O(I) (1350 Å) and C(II) (1335 Å).

c. Hardware Description. The optical schematic of the UV scanning polychromator spectroheliometer is illustrated in figure 20. An off-axis paraboloidal primary mirror formed a solar image on the 56 micron by 56 micron entrance slit of the spectrometer, corresponding to a five arc-seconds by five arc-seconds area on the target. Diffraction by a concave grating, ruled in gold with 1800 grooves per mm, produced a spectrum on the Rowland circle where seven photomultiplier detectors in fixed positions, simultaneously recorded the intensities of the six lines and the Lyman continuum. The primary mirror bi-axial motion generated a mirror auto raster (MAR) scanning pattern (polychromator mode) of five arc-minutes by five arc-minutes. The MAR scan

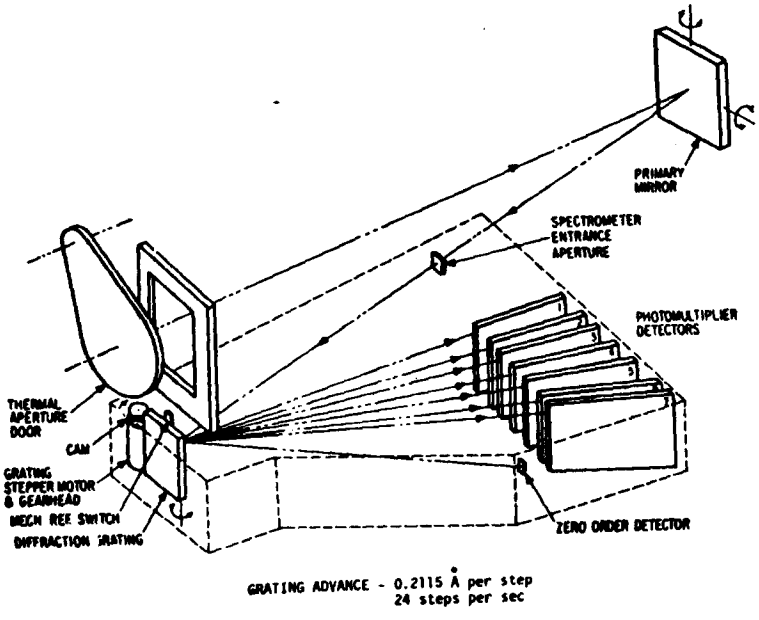

FIGURE 20. S055 OPTICAL SCHEMATIC

took 5.5 minutes. In the grating auto scan (GAS) mode, the primary mirror remained fixed while the grating was tilted to scan the entire operating spectrum past one or more photomultiplier detectors. One GAS required 3.8 minutes. The signals from the detectors were transmitted to the ground by telemetry. The detector characteristics are listed in table XV.

TABLE XV. S055 DETECTOR CHARACTERISTICS

Detector	Spectral Line	Wavelength (Å)	Steps from Det 1
1	C (II)	1335	0
2	HLyα	1216	568
3	O (VI)	1032	1436
4	C (III)	977	1696
5	HLy∞	896	2079
6	MG (X)	625	3358
7	O (IV)	554	3692

2. Experiment Operations.

a. Mirror Auto Raster Near Sun. During the mission all seven detectors or selected detectors were chosen for this mode. The particular grating position selected was used to position the wavelength of primary interest at the opening to detector 1, to establish a reference. See table XV for grating positions vs wavelengths.

b. Grating Auto Scan. These modes were used while the vehicle was in the solar inertial mode or offset from the sun. The S052 display and the S055 counter display were used to assist pointing S055 and S082B at the comet.

The ATM observations of Comet Kohoutek are listed in table XIV.

3. Constraints. The experiment constraints were successfully met during the mission.

4. Hardware Performance. Hardware performance is covered in reference [3].

5. Experiment Interfaces. Experiment interfaces are discussed in reference [3].

6. Return Data. All data was telemetered to the ground during the mission.

7. Anomalies. No major operational problems occurred during the mission.

K. S056 XUV and X-ray Telescope

The Principal Investigator for Experiment S056 is Mr. James E. Milligan, MSFC, Huntsville, Alabama. The experiment was developed by the MSFC.

1. Experiment Description.

a. Objectives. The objective was to observe x-ray fluorescence and brehmstrahlung radiation in the 2 to 33 Å range when excited by solar x-ray activity. The observations were unique and exploratory in nature.

b. Concept. The S056 experiment was to photograph any soft x-ray fluorescence of cometary material following the onset of x-ray activity as detected by the X-ray event analyzer.

c. Hardware Description. The experiment schematic layout is illustrated in figure 21. The experiment is comprised of two different instruments:

A grazing incidence x-ray telescope to photograph x-ray images of the comet in the spectral region (5 to 33 Å) on 35mm film.

An electronic x-ray event analyzer to analyze the spectrum between 2 and 20 Å by means of gas filled proportional counter tubes; tube output is telemetered to ground.

2. Experiment Operations. S056 performed long exposures, preperihelion and postperihelion, with its incidence of operation highest, while the comet was near perihelion on the far side of the sun.

A summary of S056 performances is contained in table XIV. The S056 entries of S FR 1, 2, 3, 4, 5 used in the table refer to single frame, filters 1 thru 5 respectively and correspond to specific bandpasses between 2 and 33 Å. Solar exposures were normally programmed for shorter times than used for the comet, but the controls were overridden for the longer comet exposures.

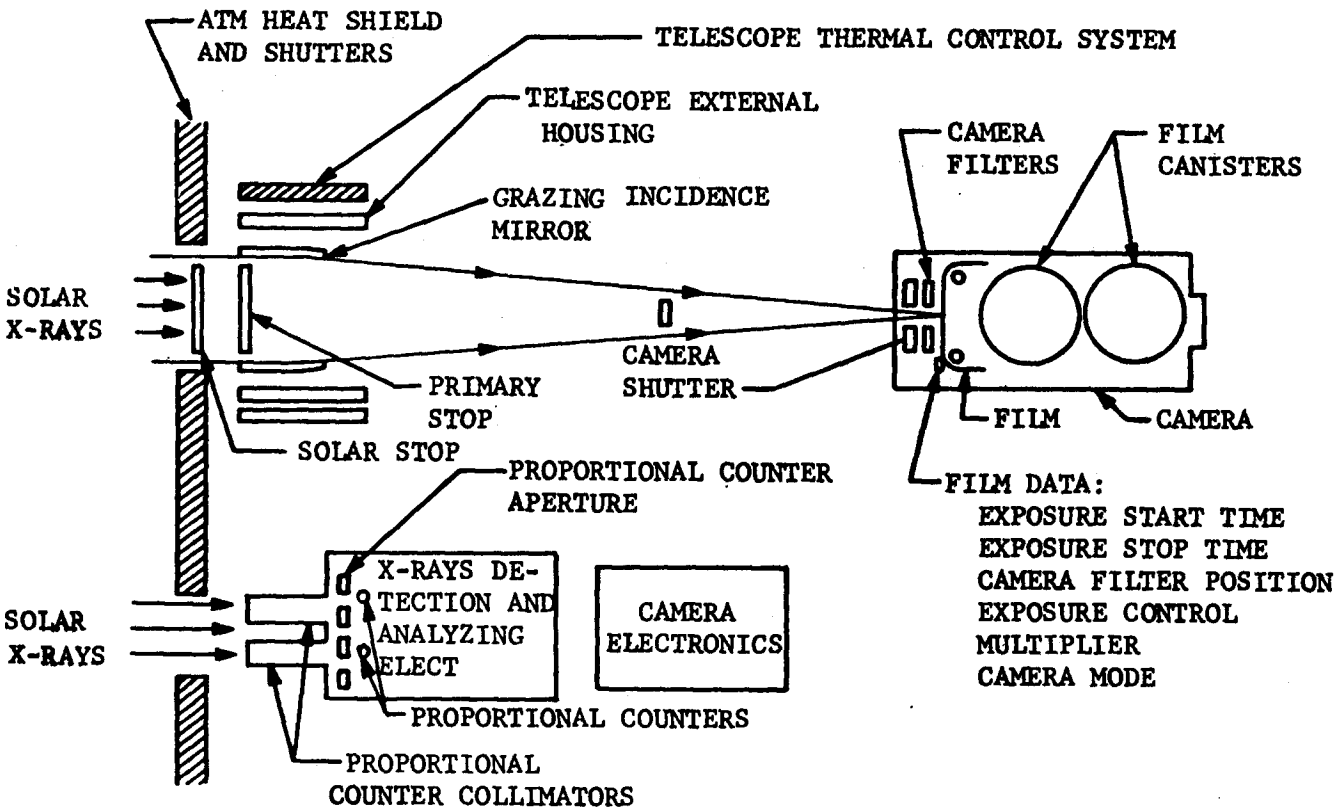

FIGURE 21. S056 SCHEMATIC

3. Constraints. The experiment constraints were satisfactorily met during the mission.

4. Hardware Performance. Hardware performance is covered in reference [3].

5. Experiment Interfaces. Experiment interfaces are discussed in reference [3].

6. Return Data. All film associated with cometary exposures was returned for data evaluation.

7. Anomalies. No major operational anomalies were experienced while viewing the comet.

L. S082A XUV Spectroheliograph

The Principal Investigator for Experiment S082A is Dr. Richard Tousey, Naval Research Laboratory, Washington, D.C. The experiment was built by Ball Brothers Research Corporation, Boulder, Colorado, under contract to NRL.

1. Experiment Description

a. Objective. The scientific objectives were to obtain monochromatic images of the extended comet source in the 150 Å to 625 Å range at minimum elongation. The major resonance lines of neutral and ionized helium at 584 Å and 304 Å and ionized oxygen at 539 Å were the prime candidates for study.

b. Concept. The data to be obtained could provide important information about the comet chemical composition and the ratio of helium to hydrogen. The imagery to be obtained could provide information of the solar radiation and solar wind effects on the comets. Due to sensitivity, this experiment is exploratory with little expectation for obtaining any comet data.

c. Hardware Description. The spectroheliograph optical system is illustrated in figure 22. The spectroheliograph entrance aperture permitted the spherical concave diffraction grating to view the entire sun. The grating diffracted image into its spectral components. However, as a spherical mirror it also focused the diffracted images onto the film strip. The resulting photograph was a series of pictures in different wavelengths.

The geometric field-of-view was 56 arc-minutes. To accommodate the desired spectrum width on the film strip, the diffraction grating was rotated through an angle of three degrees. This rotation focused either the short wavelength, 150 to 335 Å, or long wavelength 321 to 625 Å, bands on the film strip.

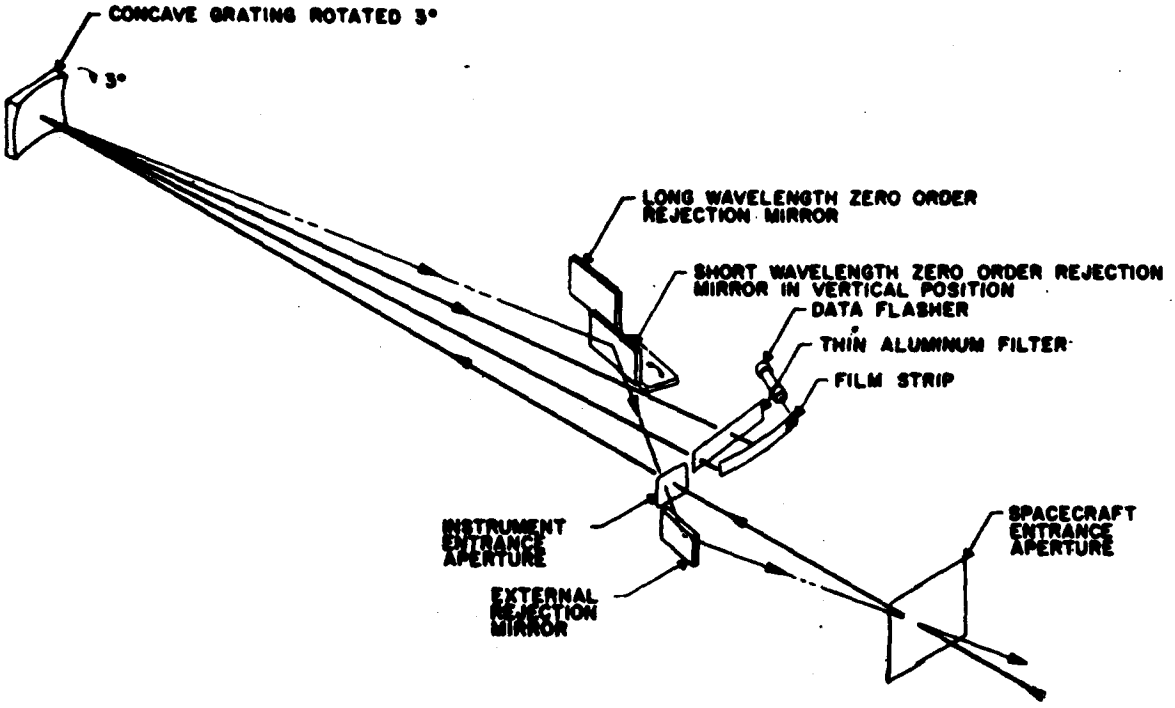

FIGURE 22. S082A OPERATIONAL SCHEMATIC

2. Experiment Operations. The experiment obtained five frames of data on December 27 near the comet's minimum elongation, details of which are shown in table XIV.

3. Constraints. All experiment constraints were satisfactorily met during the mission.

4. Hardware Performance. Hardware performance is covered in reference [3].

5. Experiment Interfaces. Experiment interfaces are discussed in reference [3].

6. Return Data. The S082A comet-related film was returned for evaluation.

7. Anomalies. There were no anomalies associated with S082A's comet operations.

M. S082B Ultraviolet Spectrography

The Principal Investigator for Experiment S082B is Dr. Richard Tousey, Naval Research Laboratory, Washington, D.C. The cometary science co-investigator is Dr. Horst U. Keller, University of Colorado, Boulder, Colorado. The experiment was built by Ball Brothers Research Corporation, Boulder, Colorado, under contract to NRL.

1. Experiment Description.

a. Objectives. The scientific objectives were to obtain:

H Lyman-alpha profile and intensity;

Deuterium Lyman-alpha profile and intensity;

Spectral intensities of the atomic and molecular emission lines over the wavelength range of 970 to 3940 Å.

b. Concept. The data obtained is to be analyzed to determine if metallic, diatomic, and polyatomic emission lines were recorded, thus providing unique comet chemical composition data. The spectral resolution could allow analysis of line profiles to determine temperature and pressure. The spatial resolution could allow analysis for solar radiation and solar wind effects, and the ionization and decay rates of the observed constituents. The equipment had the special advantage of being able to obtain high resolution spectrography in the ultraviolet region of particular interest to cometary science.

c. Hardware Description. An experiment optical system schematic is illustrated in figure 23. A predisperser grating assembly with two gratings generated a light beam containing the desired wavelength regions. The main grating, a concave mirror ruled at 600 grooves per mm, was to produce a spectrum on photographic film with a resolution of 0.08 Å in the 970 to 1970 Å range and a resolution of 0.16 Å in the 1940 to 3940 Å range. The entrance slit admitted light from a two by 60 arc-seconds area on the sun.

2. Experiment Operation. The experiment observed the comet both preperihelion, near perihelion, and postperihelion to map spatial structure changes. Exposures were taken in both the long and short wavelengths and are summarized in table XIV.

3. Constraints. The experiment constraints were satisfactorily met during the mission.

4. Hardware Performance. Hardware performance is covered in reference [3].

5. Experiment Interfaces. Experiment interfaces are discussed in reference [3].

6. Return Data. All the comet-related S082B exposed film was returned for data evaluation.

7. Anomalies. No major operational problems were experienced while viewing the comet.

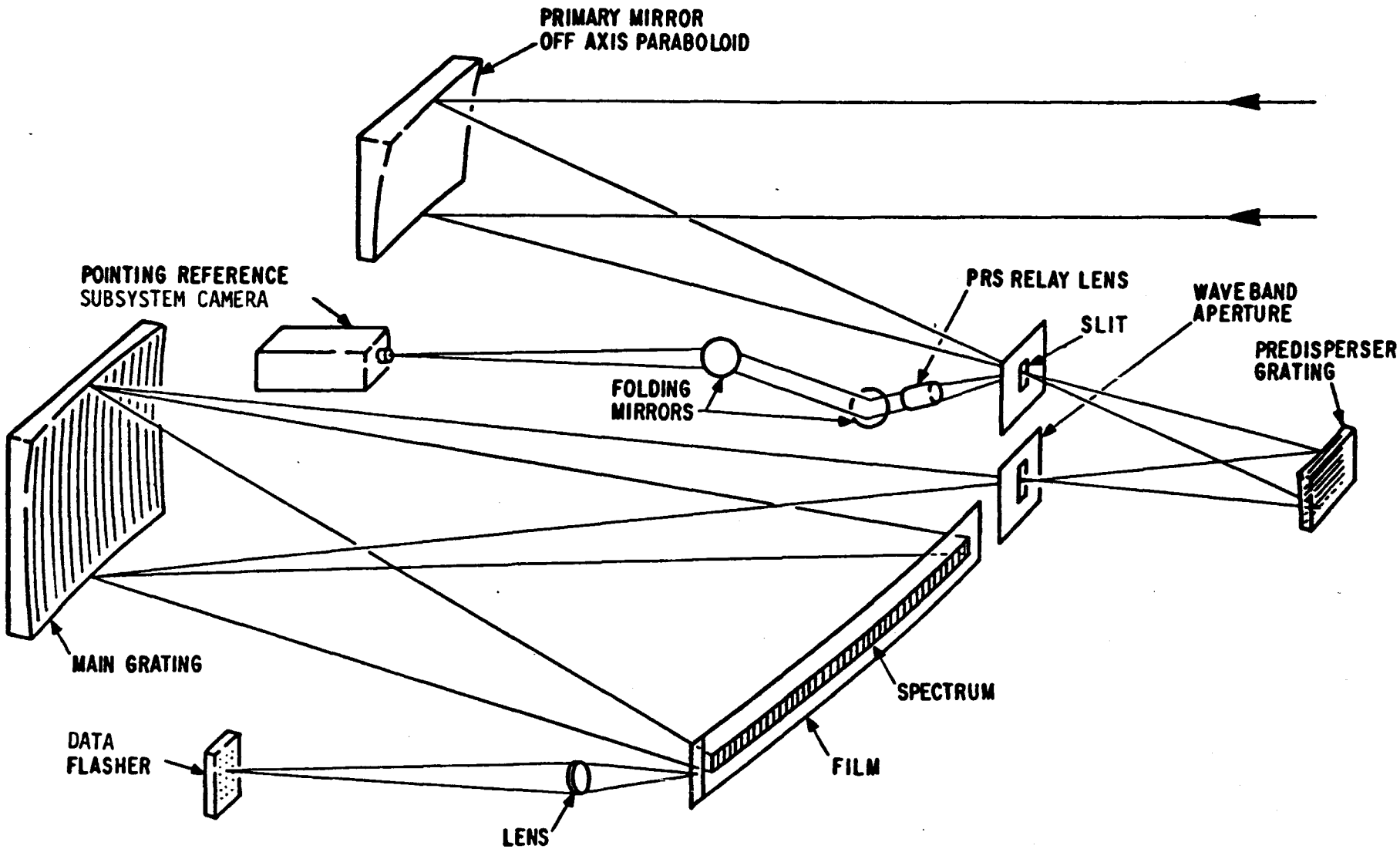

FIGURE 23. S082B OPTICAL SCHEMATIC

SECTION VII. CONCLUSION

The Skylab Kohoutek Program was extremely successful from an operational viewpoint. The program, as performed during SL-4, was only modified from premission planning based on the real-time changes in comet brightness. Although disappointed by the comet's lack of brightness the entire Skylab science community was aware of the scheduling reduction that resulted and they were completely satisfied with it.

As reported, both in this document and in the results of scientific seminars since the mission, not all experiments obtained the anticipated data. However, the data obtained is unique as it was taken above the atmosphere and is the only data of its kind obtained in the dynamic period near perihelion.

Many instruments which viewed the comet from Skylab were designed for brighter sources. When the comet did not achieve the anticipated brightness it was still judged desirable to complete the observing program. A lesson learned for future comet studies from space is that instruments should be designed specifically with the comet's magnitude in mind. It is extremely important for man to continue space-borne cometary investigations if he is to learn more about their primordial nature and possibly the origin of the solar system.

The scientific community's mutual sharing of information during the Skylab program was a beneficial aid in the overall cometary observations success. Skylab personnel located at JSC during SL-4 shared information daily with Operation Kohoutek personnel at Goddard Space Flight Center and scientific personnel at the Smithsonian Astrophysical Observatory. An example of the cooperation that existed was that thru the Skylab Astronaut's commentary on comet brightness, an Aerobee rocket flight was rescheduled. This type of mutual cooperation could serve as a model for future manned scientific astronomical observations.

APPENDIX A

SKYLAB 4 CREW COMMENTS ON KOHOUTEK

This appendix contains the crew descriptions of the Comet Kohoutek's physical appearance as viewed from Skylab 4. These commentaries do not include every experiment performance, which were summarized in Section VI, but only the crew's observations during experiment operations while viewing thru windows and reviews of their sketches.

The voice transcripts that were used in preparing this section were slightly edited for clarity. The original transcripts have been identified with the appropriate Mission Control numbers, if the reader should require any further detail.

APPENDIX A

SKYLAB 4 CREW COMMENTS ON COMET KOHOUTEK

11/24/73, DOY 328, MD-9, 17:26: - GMT — Tape #MC260/2

PLT I saw a fuzzy spot, but I did not satisfy myself that I had found it. But I do know the area now and I can get some good photographs. And by the way I pointed the camera the wrong way the other night. (NOTE: referring to experiment S233 on 11/23)

11/28/73, DOY 332, MD-12, 02:31: - GMT — Tape #MC387/1

CC PLT, are you able to see the comet yet without binoculars?

PLT Negative

11/28/73, DOY 332, MD-12, 03:15: - GMT — Tape #MC389/2

PLT And Bill, I'm up here in the command module and I got a real good view of the comet in the binoculars now.

CC Okay, we copy that.

PLT I get a very prominent tail.

11/30/73, DOY 334, MD-15, 13:17: - GMT — Tape #MC472/1

PLT Say, I got a question regarding the comet, Story. I had trouble finding it last night and this morning, but it was just close to daylight so it could've been that--it was me in the light. But is that comet petering out or what's the status on it? Could you give us a sort of a status report?

CC Stand by 1.

PLT Night before last, it looked like it was growing a little bit. I could see a little bit better defined coma. But last night and this morning again, I couldn't even see it.

CC Bill, what I'm being told is that you could see a plus 6 magnitude with the naked eye and Kohoutek is about a plus 5 now.

PLT My naked eye must have a few clothes on it.

CC Well, we've been out on the roof, especially during this graveyard shift. Each night we go on out and some of us can see it and some of us can't. But we've had pretty good luck with binoculars.

12/1/73, DOY 335, MD-15, 00:59: - GMT Tape #MC497/3

CC But let me read up general information on Kohoutek. This is from comet control, Houston. With reference to your question on why the comet is difficult to see, it's currently in an area where there are a lot of stars of similar magnitude. In addition, the total integrated intensity of the comet is plus five. This intensity is spread over the area of the comet and it's the sort of thing that you'd see, I guess, when you're defocusing a pair of binoculars. So that its surface intensity is dim and the star like nucleus of it is only plus 8 to plus 10 magnitude. And down here on the surface of Earth a plus 6 is generally considered to be about the dimmest star that you pick up with the naked eye. Up there, you probably get a plus 7 or so, so the nucleus is right about your threshold of visibility. Over.

PLT Rog, Bruce, that's very interesting. And do you also have any predicted performance on this thing? Do they have any update on it, what they think it's going to do?

CC Oh, yeah, we got lots of predicted performance. Generally of course, it's going to get brighter. If you want specific numbers, we'll have to get them for you.

PLT Yeah, relative to what they had originally predicted. Does it still look like a real boomer or is it going to just sort of bomb out?

CC No, it still looks like a real boomer. The conversation I've heard is that it may fall a few percent less than the original prediction. But it should definitely be the dominant feature in the night time sky.

PLT Okay, that's what I wanted to know. Thanks a lot because I've really been looking at that and I can't see it except with binoculars. And I've been sort of hitting myself on the side of the head wondering why I can't see it because you keep telling me I ought to be able to.

12/1/73, DOY 335, MD-15, 01:07: - GMT Tape #MC498/1

CC No, apparently it is coming along pretty well as predicted. I've heard some commentary that it seems to be more of a dust type comet than it does an ice comet, but that's just what I've seen in the papers.

PLT Yeah, I have noticed the dust tails.

CC And we're passing your request on to comet control here for a fuller briefing on the subject.

12/5/73, DOY 339, MD-20, 13:48: - GMT Tape #MC659/1

CDR I noticed this morning that the comet is getting awfully close to the solar panel. I guess it won't be much longer before we lose it. We'll have to go to a different window. (NOTE: Reference is to S233 out of CM-1 window.)

12/06/73, DOY 340, MD-20, 01:34: - GMT Tape #MC684/2

CC Are you able to see the comet yet without binoculars?

PLT I saw it 2 days ago. Last night, however, I could not see it, but I think that was because it was right on the edge of the solar panel. It was only visible for a few minutes and I was busy taking the exposures. But 2 days ago I could see it.

CDR This is the CDR. I saw it this morning unaided.

12/07/73, DOY 341, MD-22, 13:00: - GMT Tape #MC728/1,2

CDR By the way, on S233, I'm not sure, but I think that the comet is being occulted by the ATM solar panel, as far as the camera's concerned. I got down below the camera with a pair of binoculars and was able to see the comet right at the edge of the solar panels. So it may be that we're in a position now where by the time the comet rises, you may get 1 or 1-1/2 minutes of seeing time. And then it'll be essentially occulted.

CC Okay. We copy that and see if we can't figure out another way to handle it.

CDR Okay. One of these times when we have a night pass I'll time just how long you do have it when the binoculars are in the position that the camera is.

12/07/73, DOY 341, MD-22, 23:51: - GMT Tape #341-10 page 8

PLT Something looks like a tail on that one over there. I don't know if I'm fooling myself or not. I think you got it. The tail was sticking from upper left and going lower right. I don't know if it's my eye making the smear or what. Why do these apertures always have to have such lousy focus? You never can focus. You have to have your eyeball in such a critical position to see anything. (NOTE: These comments were during experiment S019 thru AMS.)

12/08/73, DOY 342, MD-22, 00:55: - GMT Tape #MC746/1

CC The present visual magnitude estimates are running about 1 magnitude below the lower predicted magnitude curve that's in Appendix A in the ATM section of the Flight Data File. However, Dr. Roemer of the Lunar and Planetary Lab in Tucson estimates that the maximum magnitude at perihelion will

still probably reach about minus 4, as predicted by the curve. And this corresponds to Venus when it's at its brightest. According to the curve, the present magnitude should be about 3.2 and the latest visual observation on December 5th was 4.3. The tail length is now reported to be about 3 degrees and the comet spectrum has been observed on the ground from UV to IR region. A little later this evening Jerry, you're scheduled for a 233 ops. We have a question about that; you reported the other day and we did predict that pretty soon it's going to be no longer visible because it's going to get occulted by one of the ATM solar panels out that command module window. We would like you to verify tonight if you can no longer see the comet out of the command module window. The pad prediction showed that it still should be visible for another couple of days. And also at the same time, if somebody else has a chance to go to STS 3 window, we also predict that it should be visible out there and we would like to know if it is. Over.

CDR Okay, I tried that earlier today and just didn't get there at the right time. And we'll give it a whirl at STS 3 tonight to see if we can locate it. The comet can be seen but the camera now has to be down at the bottom of the window. And it won't be long until we lose it out the command module window. I got the distinct impression about 3 days ago that I could see both tails on the comet. It's very, very, vague though, and I'm not sure it's just more of an impression than anything else. But I felt like I could see a straight tail as well as a curved one. Lately, with the comet observations coming so close to sunrise, it's getting difficult for us to see it up here too. And the relative appearance now is that the tail is shrinking, and I think that's just because there's more scattered light, because of the impending sunrise.

12/08/73, DOY 342, MD-22, 01:56: - GMT Tape #MC748/1

CDR For S233, the Kohoutek observation from the command module, I'm convinced now that we're wasting our time taking anymore pictures out of the command module window. With the camera in the window as low as I could get it, and with the ATM solar panel almost cutting the field of the view of the camera in half, I'm still not sure that the camera was seeing Kohoutek. Because I could get down below the camera and really crane my neck inside up and just barely catch the back end of the comet, up underneath the ATM panel. So I think we're wasting our time and film and we need to go to another window. And we were not successful in seeing it in S3, but I don't think that means anything. The next night-pass, we'll try again.

CDR And one embarrassing question, which is S3? Do you use the last number that's next to the crank?

CC It's the window closest to the plus Z dyanmic axis, I believe, Bill.

CDR Okay.

CDR I think I was looking out the wrong window. I looked out the one that had a crank panel number 243 by it, there are no S numbers on the windows here.

CC Yeah, that was - we should have given it to you differently. We'll check on it and make sure we give you the one we think it's visible out of.

CDR Yeah, I should have used my head, I know which way minus Z is.

12/08/73, DOY 342, MD-23, 12:06: - GMT Tape #MC752/1

CDR We tried to see Kohoutek out the window and weren't able to locate it last night. We'll keep trying every chance we get. (NOTE: Reference to STS 243 window for experiment S233.)

12/08/73, DOY 342, MD-23, 17:56: - GMT Tape #MC760/1,2

CDR I got my first good look at Kohoutek in several days out window number 3 while we were in the attitude for S063. I mentioned last night that I had a vague impression of being able to see the curved part of the tail as well as the straight. I was not able to get that feeling as I was looking at it a few minutes ago. The tail, however, is longer than I've seen out the command module window and that reinforces my conviction that we were not seeing all of the comet out the command module window; that part of it was being occulted by the ATM solar panel. The tail is getting quite visible now and is indeed quite long. I wouldn't even know how to go about giving you an estimate of how many degrees I would say it is. But it's getting easier and easier to see.

12/09/73, DOY 343, MD-23, 02:11: - GMT Tape #MC775/1

SPT I tried this afternoon during one of the night passes to see Kohoutek through the S3 window, and it looks to me like it is still behind the ATM panel, but it's moving in the right direction, where we'll see it come out.

12/09/73, DOY 343, MD-24, 23:37 - GMT Tape #MC802/2,3

CDR It looks like Kohoutek is still behind the ATM solar panels, as best we can tell. We'll take another look at the S233 period tonight.

(later)

CDR I got a look at Kohoutek when we did our S063 maneuver; I looked out of window number 2. There's getting to be so much stray light up there now that it's getting harder and harder to see. You don't see that much of the tail.

12/10/73, DOY 344, MD-24, 03:34: - GMT Tape #MC811/1

CDR I tried to get on Kohoutek at S233 time and it just didn't work out, we can't find it.

CC Well, I'll be darned, sorry about that.

CDR It has to be hidden behind that ATM solar panel, that's all I can see. The starfield seemed to indicate that's probably where it is. I've seen it everytime we've done a 70 degree roll, to do either S063 or one of the other out the SAL window rolls, you can see it very plainly in STS window number 2, but I get the distinct impression that the tail is shorter and I think that's because it's so close to sunrise.

12/11/73, DOY 345, MD-25, 02:58: - GMT Tape #MC838/1

CDR Tonight, while Bill was doing S233, the comet finally peeked down from behind the ATM panels; so we should be able to get a few more pictures.

12/13/73, DOY 347, MD-27, 03:51: - GMT Tape #MC898/1,2

CC Aboard the Queen Elizabeth 2, the weary seaborne skygazers failed to view the comet Kohoutek early today in their last sighting attempt before steaming back to New York. About 200 passengers aroused themselves by 4:30 a.m. Eastern Standard Time each day only to stand on the soggy afterdecks vainly searching for an opening in the stubborn mass of gray clouds over the Eastern seaboard. The most celebrated passenger aboard, Lubos Kohoutek, has been trailed by autograph hunters and a television film crew. The Smithsonian Astrophysical Observatory said that the comet appears as a white blob about 10 to 15 degrees above the southeast horizon just before sunrise each day this week.

CDR I think the passengers on the Queen Elizabeth probably shouldn't feel too badly, we can't even see it here with the naked eye.

12/13/73, DOY 347, MD-28, 12:14: - GMT Tape #MC901/2

PLT Roger. Kohoutek has really got a significant tail now. I can see it with the naked eye and also the binoculars. It looks like it's grown quite a bit since the last time I took

an observation. So it ought to become visible from the ground shortly, if it isn't already.

CC Roger. We'd love to have any description you can give us of it.

PLT Okay, there's a fairly bright star near the end of its tail. Actually, I don't know; the astronomer would probably know which star I'm talking about, but the tail extends from the head of the comet back to that star, which, just judging, I'd say 2 to 3 degrees is the length of the tail. And it's significantly brighter and longer and more distinct than it was previously. That was yesterday morning or day before yesterday, the last time I took a good look at it with the binocs. And I was able to keep it in view even as the sun was coming up; so it seems to be brightening considerably. I don't want to give any undue hope of it being real bright, but I can definitely see it with the unaided eye and I can see the tail. (NOTE: Star appears to be -Libra.)

12/13/73, DOY 347, MD-28, 15:03:46: - GMT Dump Tape 347-05

CDR We see the airglow horizon going by. I see Kohoutek loud and clear. Two minutes and 30 seconds have gone by or will go by in about 4 seconds. The first minute and a half of the exposure was clouds, or I should say the Earth. And then up until about 2 minutes and 15 seconds you were looking at the airglow between the horizon and top of the airglow. And finally just about 02:15 is when the comet finally cleared. And we are now completing our third minute. We have the comet and a tail. It's really not as clear in your optics as it is with a pair of binoculars out the STS window.

CDR I think I did you a disservice, Carl, in that I started the exposure on Kohoutek too early. I'm finally looking over the remarks in my pad and I should have waited till exactly 03:40. (NOTE: Reference to experiment S019.)

12/14/73, DOY 348, MD-28, 00:22: - GMT Dump Tape 348-01

CDR The Earth's horizon is now going through the field of view. I see Kohoutek. It's still in the airglow.

CDR MARK. At 00:06 Kohoutek cleared the airglow. It's in the night sky now. We're not too well pointed, Houston. Kohoutek is down in the lower right-hand side of the field of view. Okay, we still have Kohoutek in the field of view, and it's coming up on 00:24. 00:24 and 30 seconds; Kohoutek still in view.

SPT How's it look?

CDR Well, it looks pretty good. It's not well pointed, and I don't think we have all the tail in the field of view. We have just the nucleus. We're coming up on 00:25. Stand by.

CDR MARK. It's 2 minutes now until termination of the exposure in my field of view in the optics eye piece here. Kohoutek is down at 4 o'clock. And it's out at a radius of about 0.7 or point - yes, 0.6 to 0.7. The tail is radiating down toward about 5 o'clock. And I think if we were better pointed, you would get all the tail in this picture. Right now, I think the tail is at least outside of the field of view of this eye piece.

CDR We're now 50 seconds from termination of the exposure. Okay, we still have Kohoutek; it's still with us. Thirty seconds to go. Have a nice long straight tail on Kohoutek. Quite clear. Can be seen with the unaided eye now out STS window number 3. We're 5 seconds from termination. Still looking good. Stand by.

CDR MARK. Terminating at 27. Okay, as I look, I'm going to close this SAL window immediately. All right, setting the rotation to zero, and as I was looking at the star field - looking at Kohoutek, I think I saw the upper three stars, the head of Scorpio up at about 10:30 to 11 o'clock at a radius of about 0.9. (NOTE: Comments during S183 performance.)

12/14/73, DOY 348, MD-29, 14:30: - GMT Dump Tape #348-05

CDR This is the CDR, at 14:30 Zulu reporting completion of the first S233 exercise of the day. It started at 14:21. I got the exposure started at precisely 14:21 with the comet still down in the air glow. You could see the star which we never have gotten the name of, I asked for it yesterday, there's a bright star, and it was being somewhat occulted by the tail yesterday.

The comet has now moved far enough along so that the bright star is no longer in the tail of the comet. That star has just risen when I started the first exposure. The second exposure, I started at 14:22:39, which is about 2 seconds after the comet itself had risen. The third exposure was started at 14:24:59, and that one was completed before Sunrise. The comet is becoming, far as we can see, longer and stronger. I could see the comet last night and this morning with the unaided eye. Window 3 is beginning to work out very nicely.

12/14/73, DOY 348, MD-29, 13:49: - GMT Tape #MC929/2

CDR Just finished looking at Kohoutek. It's getting longer and stronger.

CC Very good. Been going outside to see it in the morining. Haven't been able to do it with the naked eye yet.

CDR No, Bill's been able to see it unaided for some time. And I saw it a couple of times out of the command module and haven't seen it since until last night and this morning. And you can see it again.

12/14/73, DOY 348, MD-29, 15:55: - GMT Dump Tape 348-06

CDR MARK. We're looking at frame number 19. We're looking at Kohoutek. ROTATION is 201.6; the TILT is 18.8. The first one is 180 seconds, unwidened.

CDR Okay, it looks like we're pretty well pointed. I have Kohoutek at 5:30 o'clock at about 0.4 radius out from the center of the view finder. And the tail is pointing downward at the 5:30 direction. Looks like it's kind of radiating outward from the center of the view finder. One minute's gone by, 60 seconds.

CDR So if there's a spike, you're gonna have it right in the middle of the view finder. Unfortunately, you probably don't have all of the tail. (NOTE: Comments during S019 experiment.)

12/14/73, DOY 348, MD-29, 17:34: - GMT Tape #MC935/1

SPT The night side before last, I got a chance to look at it, while the folks were working on S019. And it certainly is growing fast from what I saw yesterday. The tail appears to be about 4 degrees in arc length and visible with the binoculars. The length to width ratio is estimated to be around 20. That puts the width at something like 1/5 of a degree. The full width is achieved around say, three widths back or 3/5 of a degree. And from there on it's pretty uniform and very straight.

12/14/73, DOY 348, MD-29, 18:06: - GMT Tape #MC936/2,3

SPT Okay, now I'll tell you about comet Kohoutek. I got a chance to look at it the night before last. The orbit night before that, and in looking at it through the binoculars, I saw the tail of around 4 degrees. Yesterday, I had estimated it to be around 3 degrees. And I did this by just comparing the field of view in the binoculars with something I could see inside, and, measuring distances and angles and so forth, it came off at around 4 degrees. I'd estimate a length to width ratio of around 24. That'll give you width of around 1/5 degree. And again, all this is eyeball. It gets to full width around three widths back. That is 3/5th of a degree back from the coma. For the edges of the tail are

very straight from those three widths back. And at around ten widths or so back it starts to fade away, and gradually, by 20 widths, it's disappeared. I think a lot of it is dark adaption. Now the coma itself, relative to the tail, is relatively bright. And I could see nothing in the way of a second tail, that is either a bluish or white tail anywhere. This one was primarily white which I saw. I could not identify yellow as yet; it had a yellow tinge to it. It's primarily white. I could not see whether the comet itself was elliptical. I think we're a little bit too far out for that. However, comparing it with yesterday, the brightness has increased as it moves in rapidly toward the sun. I guess it's not almost a half a solar radius out and it's picking up speed and moving fast. I expect in the next 2 or 3 days we ought to see some dramatic changes and it's going to be pretty interesting from there on.

12/16/73, DOY 350, MD-31, 14:43: - GMT Dump Tape #350-05

CDR The comet today is very easily seen with the naked eye and the tail itself can be seen with the naked eye. Looking through the binoculars, the comet from head to tail takes up 3/4 of the field of view of the binoculars. That is, I put the head of the comet on one edge of the field of view, and the end of the tail, as far as I could see, was about 3/4 of the way across the diameter of the binoculars. I'm not sure that any other method of measuring the distances is valuable at all. I'm looking there to see if I can figure out what the power of these binoculars is. I guess the best thing to do would be to get a set down there and just check them out and see what the field of view is.

At any rate the comet is definitely getting brighter. (NOTE: Binocular FOV = 7°, $\therefore$ 3/4 FOV $5\frac{1}{4}^{o}$)

12/16/73, DOY 350, MD-31, 22:51: - GMT Tape #MC1007/1

CDR Okay, on that S019 run that we just finished. I did not have time to do any repointing without affecting the exposures themselves so all I can tell you is that the comet, rather than being at 9 o'clock on the vertical crosshair to the left, was halfway between that left-hand crosshair and the center crosshair at 9 o'clock.

12/17/73, DOY 351, MD-32, 15:55: - GMT Tape #Mc1023/3

CDR The comet is getting closer and closer to one of the struts out there that supports the ATM. I wouldn't be surprised in the next day or two if we don't find ourselves occulted again.

12/17/73, DOY 351, MD-32, 17:04: - GMT Dump Tape #351-05

Following the performance of S063K, looking thru UV transmissible lens.

PLT I never was confident that I saw the comet. I did have a fuzzy white blob in the field of view. Very indistinct, and I don't know if it was the comet or not.

12/17/73, DOY 351, MD-32, 21:50: - GMT Dump Tape #351-07D/D-319

CDR There is definitely a brightening of the comet around the nucleus and streaming back from the nucleus. I would estimate the front 10 percent is much brighter now. The comet no longer looks like a point in a long tale diminishing in brightness all the way out. It now shows the nucleus rather brightly, than extending back from the nucleus is a wedge of light that's included in the tail, that is almost as bright as the nucleus itself. And then extending on back beyond that wedge, the tail begins to look more normal, that is, as you get away from the comet, the tail becomes less bright. I didn't notice that last night. I think it took the remarks by Bill Snoody this afternoon at the science conference to cue me to be more conscious.

CDR But now that I look at it a little bit, it most definitely is brighter today than it was, last week, when it was sort of a bright dot with a uniformly diminishing brightness in the tail all the way to the end. And now we see the wedge of brightness extending back from the point. I would estimate the wedge about 10 percent of the length of the tail.

12/21/73, DOY 355, MD-36, 14:09: - GMT Tape #MC1171/1

MCC On Kohoutek, Bob McClee and Dick Monroe tell me that you shouldn't be surprised if you don't see the comet on your display. The brightness is just not all it might be, and so they really think it's unlikely that you will be able to see it on your TV monitor. And, or course, if you don't see it, after that first maneuver, can't use your overlay, but go ahead and use the can numbers to make your second maneuver for S055 and 82 observations. Over.

SPT I thought I might try to move it over to a position a little further out so I could see it. And if I don't see it, I'll just (garble) command and pick up from there.

MCC We copy that. It just does look like with the present brightness observed from the ground that you will not have sufficient brightness to see it on the screen even if you do have it positioned properly. (NOTE: Referring to S052 TV Monitor.)

12/22/73, DOY 356, MD-37, 17:25: - GMT Tape #MC1215/1

CDR Got quite a peek at the comet on that last night pass and it really is long and bright. I didn't have time to do much more than just glace at it. I'd like to take a look at it again. Can you give me the next comet rise time.

CC Okay, I'll see if I can get that.

CDR Okay. In fact, Hank, why don't you go ahead and give the right times for the next three of four night passes.

CC Okay. Will do.

12/22/73, DOY 356, MD-37, 21:27: - GMT Tape #MC1222/1

SPT I was looking at the comet at this last sun up. And Command Module Window 1 is a much better way to go. I was able to see the tail quite far back. The coma has gotten a lot higher in intensity and much larger than I'd seen it about a week ago, when I looked at it in detail. I only was able to see one tail however, strictly a fairly wide gas tail driving a dust tail going straight back. The coma itself has become quite a bit larger and the tail just picks up that size and goes straight back. I think command module window 1 is the one to follow it from here on out.

12/23/73, DOY 357, MD-38, 16:42: - GMT Tape #MC1247/2

CC Assuming perfect pointing and the comet's head appears as we expect it will, the tail will be off to the right and at an angle of 12° above the horizontal as you look at it on the monitor.

SPT Okay, thank you, Dick. These maneuvers have put the coma at the location specified, and - not any other feature. That is, you haven't tried to center it a little bit back in the tail, or anything. And we're really talking about the coma all the time, are we not?

CC That's affirmative.

12/23/73, DOT 357, MD-38, 17:26: - GMT Tape #MC1249/1

CC I guess what we intended by that was that you get the head of the comet in view and then either by looking at the tail or making your best estimation based on our prediction of the fact that it's going to the right and slightly above the horizontal moving out the center line of the tail distance of half a degree or 62 in octal.

SPT Okay, what this implies then is that once we maneuver up to the comet we then take and before the following pass we maneuver back out to where we think we can see it and then try that all over again.

CC That's correct, Ed. That was the idea.

SPT Okay, is that true before each one of the three observation periods? Yesterday it was not done that way.

CC Roger. I think our intention was that it would be only necessary just for this one pointing where we're pointing

at a certain point out of the tail. Does that make sense to you?

SPT Yes, it does.

12/23/73, DOY 357, MD-38, 19:06: - GMT Tape #MC1252/2

CDR In the white light coronagraph TV display, the second time we looked at it we had a fairly large shadow which looked like a very large occulting disc, both the pylon for the disc and the occulting disc itself moved a little bit off to the left. We're still able to see the comet, however. I imagine it must be our attitude and something maybe light coming from the earth's atmosphere.

12/23/73, DOY 357, MD-38, 20:05: - GMT Tape #MC1252/2

SPT Also, Dick, during this last data take period, we saw what we thought was a star out at position of minus 50 in X, of minus 111 in Y. It was not the artifact that we've seen on the scope before, which we were able to also see, but this one also moved when we made the compensation maneuver.

12/23/73, DOY 357, MD-38, 20:45: - GMT Tape #MC1252/2

CC SPT, Houston. We checked on that reported star that you saw. Actually that was the planet Mercury and for your information, the magnitude presently is a minus .5, if you'd like to compare that to the comet's brightness, if you get another opportunity or can remember.

12/23/73, DOY 357, MD-38, 21:50: - GMT Tape #MC1252/2

SPT Okay, also your question about the relative brightness of Mercury and the comet. In the maneuvering I have both out at about the same radius and they look fairly comparable to me. I could not distinguish one as being much brighter than the other.

12/24/73, DOY 358, MD-39, 18:01: - GMT Tape #1287/2

SPT Okay, Dick. We maneuvered to what we believed to be the comet. It had a slight indication of a tail sloping to the right and slightly upward. And, we also had, I believe, Mercury in the upper right-hand quadrant of the field of view.

CC We concur with that and we feel sure you were looking at the comet.

12/24/72, DOY 358, MD-39, 19:26: - GMT Tape #MC1288/2,3

SPT Okay, Ed. In terms of Mercury, it's still not quite as bright as Mercury. Yesterday, I though it was approximately

the same. I'm not sure why, but today it just appears a little bit fainter than that. Although I'm sure it has not decreased in brightness. A lot has to do with where it is in the display. You know, I did have it fairly far out from the radius. Mercury was centered in a little bit. I can give you a better estimate of that when I can look at it out the window with some binoculars, when I can get a night side free. Hold on and I'll see if I can estimate what sort of a tail that I can see in the WLC.

Say Dick, I have to say that looking at it with the 52, might be pretty hard for us to see it go beyond anything say past 0.5 to 0.8. That's about the maximum I can see the tail. I think we've just got a lot of background noise in the tube relative to that type of faint feature that we're looking at. We can turn the brightness and the contrast up, you get a lot of light noise which shows up and you can't see the comet unless you have things up and at that level. So I think we've got a good tool, perhaps, for pointing, knowing where the nucleus is.

SPT But for actually something that's real detailed for the comet, I'm afraid we're going to have to do that with binoculars out the window.

12/24/73, DOY 358, MD-39, 20:50: - GMT Tape MC1292/1

SPT Just at the close of this last night cycle before I got started on the ATM. Took another look out at the comet and I'd say that the tail that I was able to see was about 6 or 7 degrees long, but I think the reason that it comes up and rises tail first and it's tough to spot, so you've got a fair amount of scattered sunlight already in your field of view, so that you really don't see it against a dark background. However, knowing where to look, I think, might be able to do a little better job next time. Once the head is up, it's so darn close to the sun, you've already got a lot of scattered light. You're not getting a real true estimate of the length of the tail. However, the coma certainly is a heck of a lot brighter. It's very, intensely bright at the center and the shape is not completely spherical, it's more of a hemisphere with a slight cone on the back end, which gradually tapers into the tail itself. And I see only evidence of one tail so far, that's the dust tail.

CC Okay Ed. Thank you very much. Where were you looking out? out the CM-1?

SPT That's correct, out CM-1, that's a real good view there.

12/25/73, DOY 359, MD-39, 02:16: - GMT Tape #MC1309/1

CDR I just finished taking the 233 photos and Kohoutek is not looking like our old pretty graceful looking blue-white comet anymore. It's getting too close to the sun now that the tail is fanning out, it's very short. I think I can't see the rest of the tail just because it's so light. But what I can see behind the comet now, the actual nucleus is getting quite large and bright, and the tail, all we can see is a fan behind it. And we're beginning to see some reds and some yellows in it.

CC Roger, we copy.

CDR Let me change my terminology Hank, this nucleus isn't getting any bigger, the coma is getting bigger.

12/27/73, DOY 361, MD-42, 14:34: - GMT Tape #MC1405/1

SPT Looking at the white light coronograph, I can see a good comet in there. It's still not the brightness which I would hope to see, later on I will give a better definition but even at the present brightness level you can see the tail standing out quite a bit and it's got a very strong coma.

12/27/73, DOY 361, MD-42, 21:15: - GMT Tape #MC1417/1

CC We'd be very interested in seeing the comet on the WLC if you could get it for us. And also when we get there some kind of commentary as to the position of the comet that with respect to the pylon.

PLT Rog, will do. It's very visible. I don't know if it's been reported. It's very bright and in the right position at least according to this chart. So I'm pretty confident that it is the comet that we're seeing.

CC Okay, well we're real anxious to see it down here. So lets put come priority on the WLC TV downlink.

12/27/73, DOY 361, MD-42, 20:19: - GMT Tape #MC1417/1

CDR The comet on the white light coronagraph is quite plain now; it's every bit as bright as Mercury was when we first started doing JOP 18 Deltas.

12/27/73, DOY 361, MD-42, 21:48: - GMT Tape #MC1418/1

PLT The comet is in the upper right view on the screen moving from lower right to upper left. But course maintaining a trace above the sun, as it were, if the left were down and right were up as you view the ATM monitor. And I've noticed movement during the two orbits since I've been here. It's

slightly perceptible. There's no tail visible, although there is a trace that appears to be one. I think it's merely a smear on the vidicon. However, I'll let somebody else take a look at that and see if they can sort it out and tell whether it's noise or actually a short tail. There's no trouble identifying it, it's quite bright. It appears on the screen as a very small object about 1-1/2 millimeters in diameter. And I can't say much more about it than that. We're very pleased we're able to pick it up on the WLC.

12/27/73, DOY 361, MD-42, 22:03: - GMT — Dump Tape #361-09

PLT Comet is really streaking across there and you can almost see it, seems like you can almost see the thing move. At least, I notice a very perceptible difference in the first view orbit to the end of the orbit while monitoring the 52 white light coronograph it so looks like there is a tail. I assumed it was not a tail because it didn't seem to be pointed in the right direction, but it may be. It may be I had my geometry all screwed up. But I would have thought that at least it would have looked like it was pointed away from the sun on a foreshortened basis and it didn't look like that. So I'm sure, it could have been the angle and a lot of other things, I guess. But I didn't think I was seeing a tail. I thought I was seeing some kind of electronic noise or smear.

12/27/73, DOY 361, MD-42, 22:46: - GMT — Tape #MC1420/1

PLT We're about to lose the comet off our white light coronograph presentation here. Got a nice fat coma behind it.

12/27/73 CST, DOY 361, MD-42, 23:24: - GMT — Tape #MC1421/1,2

CDR The comet's right at the edge of the screen (S052 display).

SPT The coma is very bright Dick. But it is very hard to see the tail just now because of background noise and the vidicon. Right now it's right at the very edge of the field of view. And you have to move your head over underneath the metal rim that we have in order to see it. It still appears to be at its old orientation. Maybe it's moved slightly but it's very hard to tell because the faintness of the detail.

12/28/73, DOY 362, MD-43, 23:49: - GMT — Tape #MC1459/1

SPT I picked up the comet at minus 140 and a minus 20. It's exceptionally bright now in the coma. The tail appears to have fanned out to around 20 degrees half angle or 40 degrees across. The tail is up in my display and I think I can see

some slight evidence of a tail or some emission at the end of the display anyway. It's going off to the right which I believe's the sunward direction, but it's very faint and I'm going to try and get a better look at it, and maybe get a picture of it.

12/29/73, DOY 363, MD-43, 00:10: - GMT Tape #MC1460/2

SPT Okay, Dick, let me describe the Polaroid which I did get up and which shows it a little bit better than I was able to view it by eye. Relative to my display, there is the one tail going up which has fanned out quite a bit, and that is around 12 octal units or maybe a tenth of a degree or so that I could see it here. I also saw a spike which is moving almost in the opposite direction, It's inclined if you want to take up as 12 o'clock, at maybe down to around 5 o'clock. It's a very faint spike but I believe it is discernible. That spike is around twice as long as the other one, maybe 2/10 or so of a degree but it is much fainter. The coma is not spherical, it also has a very tiny spike going off at say 3 o'clock, a very small dot, but I have seen it by eye and it does show up very faintly on the photograph.

CC Roger, Ed, I copied all of that.

SPT I have looked for it in H-alpha as well as XUV monitor and with no success.

CC Okay.

12/29/73, DOY 363, MD-43, 01:44: - GMT Tape #MC1466/1

SPT Okay, Dick. I think it might be a little more interesting this time in looking at the pictures. We took two more this past time and moved them right on to the very edge of the field of view around minus 140 in X. And it took pictures of both scopes. And it does show a definite but still very faint light from the coma going off to about 5 o'clock in our direction. I can see it out to around 0.4 degrees. I believe that's probably generally the solar direction but I wouldn't want to say it's exactly solar. The other tail is more diffuse, perhaps a little brighter, but it doesn't extend quite as far, at least, not in our ability to visualize it or see it. There still is that very small asymmetry of the coma going off to around 3 o'clock. It's very faint, but still noticeable, it's just the coma being on about say 3 or 4/100 of a degree and the other asymmetries being 1/6 or 1/8 of that.

12/29/73, DOY 363, MD-43, 01:53: - GMT Tape #MC1467/1

CC SPT, Houston, we're wondering if you were able to see daylight

cycle to daylight cycle changes in the comet?

SPT That's very hard for me to estimate, because of the faintness of all the features. The only thing I can say is that maybe it's my photography and the fact that I moved the comet out a little bit further so that the magnetic function was not quite as strong for the 52. But I was able to see the sunward spike a little more plainly. I believe it's probably my positioning and photography though. Any changes, I think, would be down in the noise level of my ability to see it.

PLT One thing I did forget to mention, it's just a very subjective look at it, and that's the brightness of the coma appears to be about the same brightness as I saw in Mercury the other day. Perhaps a little brighter.

12/29/73, DOY 363, MD-44, 17:24: - GMT Tape MC#1485/2

SPT Hey, I can see the comet, yeah, look. It's right out there. See it?

SPT Okay, I can see the tail behind.

CDR Holy Cow, yes!

SPT Turn the lights off, Bill.

CDR Oh, yeah. Beautiful.

CDR You sure can.

PLT I'm going to open window number 4.

CC Skylab, we're enjoying your comments. We're about 30 seconds from LOS here and about 28 minutes to Carnarvon at 18:03. All your systems are good.

CDR Okay.

SPT Okay. We can see the tail which is antisolar, but I cannot see the spike, which showed up yesterday on the photography.

CDR Okay. It's just going into the airglow now.

SPT Just going into the airglow.

CDR A very wide, broad tail. Not very long, as well as I can see.

SPT We were not too well dark adapted there, Jer. We'll have to make a note of that next time.

CDR Yeah.

SPT Okay. I was looking at 5 degrees or so, when I first spotted it.

SPT Okay, it's into the airglow now. I suspect that's the reason you couldn't see it the other day, because it was always in the airglow.

CDR Yeah.

SPT We've got a better elongation now. I suspect we ought to see that out the window. I looked for it yesterday out window 3 and couldn't see it.

12/29/73, DOY 363, MD-44, 17:37: - GMT Tape MC#1485/2

CDR Yeah, the tail was very broad. And, Ed did you see the yellow color?

SPT Yeah, it was yellow.

CDR Very definitely, yellow-orange. And let's see; I think I would say the coma was more white or blue-white because the yellow-orange didn't start until it was out a ways on the tail.

SPT It looked a little more intense.

CDR Yeah.

12/29/73, DOY 363, MD-44, 19:08: - GMT Tape MC#1491/1

CDR Hey, there's the spike.

SPT It sure is. There's a spike going straight towards the sun and you can see it fanning off a little bit relative to the horizon.

CDR Ed, if you can hold me and keep me from drifting, I'll try to get it.

SPT All right.

SPT Okay, we've got the sunward spike and the tail is fanned out again about 20 degrees. Very good. And that sunward spike was very evident just at the beginning it's starting to fade out now. And it looks as though there's a very faint amount of material which is just rotated all the way from the tail around to the spike. The spike is not 180° out from the tail. It's more like 160°.

CC Can you say something about color, Ed?

SPT Yeah, it appears primarily yellow.

CDR Yes, yellow and orange, just like a flame.

SPT Primarily yellow.

CDR Okay. I got the footage of it. I hope it worked out. I took the first part at an f-stop of 4 and then closed her and then opened it up. When you get yourself dark adapted and the comet is far enough above the horizon to where you really have got a dark background, then you can see that spike quite well. And it shows up to be almost the same distance out as the tail. But then there's a very small

diffuse amount of material which goes around about 160 degrees where it finally joins up with the tail.

12/29/73, DOY 363, MD-44, 19:08: - GMT Tape #MC1491/2

SPT I tell you Story. That's one of the more beautiful creations I've seen It's very graceful. Too bad it doesn't last longer on our visual line here.

12/29/73, DOY 363, MD-44, 19:36: - GMT Tape #MC1493/1,2

CC While you are all out there and got a moment, I've got some questions concerning the comet.

SPT Okay, go ahead, Story.

CC We'd like again the tail orientation with respect to the sun, and is the tail straight or bent? And, are there two tails?

SPT Let's talk first about the sunward spike. That one appears to be projected straight toward the sun, as best I can tell. We'll try and get a better look at it, this next time around. From there going, as I look at it, the sunward spike is around 5 degrees at 5 or 5:30. We then go up to about 12 o'clock and that's the axis of the primary tail which spreads out around 20 degrees on either side. I cannot see any evidence of a second well distinct tail. There is a sunward spike, the tail would be 20 degrees spread and then there is a very diffuse material between the spike and running from 5 to 4:30 all the way up the primary tail itself. Colors, primarily yellow. I cannot see a second tail. I know what they're looking for, the difference between the gas and the dust. But, I cannot distinguish it. We'll take another look next time.

CC Okay.

SPT We don't have very long to look at it, and what you've got to do is get dark adapted and then get right in here behind the FAS and let the FAS occult the airglow. And, you've then got yourself around 30 seconds or so to get a good look at it.

CC Okay, later on today, when you get back inside and settle down, I will have both of you and Jer, draw a picture of the comet and we'll get that on TV at a later date.

SPT Sounds like a very good way to do it, Story.

CC Next time she comes up, both of you get a mental image of it and think about putting that on paper.

SPT Okay, we certainly will.

CDR Will do.

SPT How does it look to you down there?

CC It's a good picture Ed and we see we're centered on your right hand level drawing and we can see it.

SPT Okay, the one on the right is the way we've been seeing it primarily for the past 4 or 5 days when we've been looking at it in the white light coronagraph. Except for yesterday in which we could see a few more features. When we went out today, we got a much better picture of it and that's the one we have on the left.

CC Okay.

SPT Okay, what we're showing you here are primarily three features. First, the nucleus, then the coma, which is the bright region surrounding the nucleus. The tail which again is the amplification of the one which we previously saw and is the brightest feature other than the coma. And it fans out and again about a half angle here of 15 to 20 degrees.

CC Roger.

SPT It's very bright close to the coma itself. Primarily a yellow one appeared maybe a little gold. Jerry claims that it tends toward orange even in one location. So that's the primary tail which is coming off which we like to think of behind it or away from the sun, although in this instance it's not completely. The feature which we picked up on the white light coronograph display last night, is a sunward spike. Going primarily towards the sun and we can see it out about as far as we can see the other tail; it's a little fainter, but it's very sharp. We also see just a hint of light features over here. Yesterday we said that there was a small, a very small series of spikes or single spike, if you will, over here. Today, when we looked at it, it appeared to be just a series of uniform, but very straight streamers or feathers. In looking at the geometry we felt this is primarily towards sun center, this is as we see it now, the direction to which the comet is moving from right to left and up a little bit. Showing that the tail is not completely oriented away from the sun. It still has a little catching up to do. It's had to swing around essentially as it went by the sun. So this represents that little lag that we saw and this 160 degrees or so, which we quoted outside, and ASCO verified today that we're really looking at about 163, was the direction to the sun and that just about corresponds with what we estimated. There is that definite lag between diagonal between the spike towards the sun and the tail at the other side. Now we did not see any double tail. That's

one picture we did look for. We saw only what we would interpret as a dust tail, because of its relatively yellow appearance. There is a very bright white light down in here; Jerry thinks that he maybe saw a little blue in there also. That's hard to say, but predominantly it's a yellow cast to it.

CC Ed, let me ask you a couple of questions, while you're looking at the picture there. First of all, what is your estimation of the angular distance that you were able to see the tail in the sunward spike and also one that I have. I'm not sure I understood you. In the material on the right hand quadrant of your picture, does that material appear to be in rays or is it uniformly distributed between the sunward spike.

SPT That's fairly uniformly distributed. But because it's so faint we cannot see any fine detail in it. It may very well be a series of very small rays or feathers, or very small streamers. But because it's so very faint, your eye can just distinguish that something's there, but you can't see the details. As far as the size, we've estimated - and this again is a very rough estimate, 4 to 5 degrees. And this, of course, is greatly dependent upon how dark adapted you are or just essentially how faint the feature that you can see really is. We know that this tail certainly goes out quite beyond what we've drawn here. When I was dark adapted and looked at it the first time, I had probably the best view I've had of it. I saw it quite extensively, as I've pictured it here. The second time I was not very well dark adapted and could not shield my eyes from the bright airglow and I only saw something like this with just a very hint of a spike. So a lot is very much dependent on the dark adaptation you have when you see it. I'm certain that the instruments we had out there with us today, though, gave a very revealing picture when we bring it back.

CDR I think that's just artist's license. We got the sketch in there and we probably should have shown it. Let me reiterate that what you see on this side over here, the small one is what you see at first glance. And then after your eyes began to accommodate to the light and you begin to pick up the details, then you begin to pick up this faint part of the tail back here, and then you begin to pick up this and then very last, but no least, you begin to get this little sort of a cloud feathered area over here. But this is certainly what you see first. And like Ed was saying, this is like what we're used to seeing. But when you really got a chance to look at it, when you really see that spike and the faint part of the tail here. The source of our measurement here of 4 to 5 degrees with me holding my index finger

in my glove out and it covered, I think about from here down to here on the comet. And so we figure it's about 4 to 5 degrees.

CC Okay, thank you, Jer. Let me see if there are any other questions here and then if you've got anything else you'd like to add, go ahead.

CDR The next thing is, is this coma here looks pretty much the same size, maybe slightly larger now than Mercury, and it's nice and sort of a white. And I claim a kind of blue-white, but it's good and white. This tail moving out behind it really starts turning yellow and it does it very quickly.

CC Roger.

PLT A sort of quantitative gauge is that during the last orbit when I took that, I could see the spike down into the airglow. I lost it shortly after that, but that must be a pretty bright spike to be able to see it in the background of the airglow.

CC Roger, Bill, understand.

CDR And, Dick, we've got a little bad news to go along with the good news. And that is the DAC that we took out with us is jammed and doesn't look like we got a single frame.

CC Oh, no.

CDR Yeah, it looks like the plug is pulled the sprocket holder to pieces. We got anything else, Dick?

CC We're about 30 seconds to LOS and I'll pool the folks and see if we have any other questions. But it is certainly a fascinating discussion and we got real good TV picture. We sure appreciate it you guys.

.....

CDR Okay, we're going to kill the VTR now.

CC Okay, Jer.

CC Skylab, Houston, we're AOS Bermuda for about 5 minutes. And I have one question that we're interested in. You mentioned the color in the tail very close to the coma. Was there any noticeable color in the sunward spike?

PLT Dick, we don't believe so. Not the first appearance, it was primarily white. We could not see any yellow cast or blue.

12/30/73, DOY 364, MD-45, 15:38: - GMT Tape #MC1528/1,2

SPT We did get the first one building block 30 carried off pretty well. One thing though, when I did go on out to reacquire I found myself a little bit further off than I had expected when I made the maneuver back out. I'm going to try and look at it again. I'll try and put the information on tape which is what I had just started to do. We did get a look at the comet out the window. It turns out we can see it now through the open part in the structure on the solar panel. And the spike is not nearly as pronounced as the tail. I think the angle between the tail and the spike remains about the same. The tail itself, is I think, larger than I was able to see it yesterday, although I was looking at it through binoculars tonight, or in this last day pass. It's exceptionally bright nucleus and it is almost organe in appearance now; yellow and very orange, a little bit more so than I think I saw it yesterday.

12/30/73, DOY 364, MD-45, 19:40: - GMT Tape #MC1537/1,2

SPT Karl, I just got another good look at the comet and it's pretty much as we had looked at it before. The sunward spike is greatly diminished in intensity relative to the

following tail and almost nearly aligned and maybe a little bit more than yesterday is pretty much along the same axis, only still slightly out. The color is orange, a very bright orange, a yellowish orange. And I do not see any of the material which we noticed yesterday between the spike and the following tail.

CC Okay, did I understand that the color of the spike was orange?

SPT I hate to guess on that. It was just barely visible right now, even with a pair of glasses. The coma itself is very bright, and I hate to give you a color on that. I think it's more white than orange. But the tail itself is a yellowish orange.

CC Right, incidentally, I'm personally interested in the direction of that spike. You indicated it's not directly pointed at the sun, or can you tell very well?

SPT I'll have to try and get a better look at it again. Yesterday it had the appearance that it was pointed at the sun. I'll go ahead and try and get another look. The problem is you try to get yourself dark adapted and so you don't look where the sun is, and then you start looking as soon as sun's gone down. But I'll try and get an answer the next couple of passes.

CC Right. I'm not trying to get you to spend any time that should be spent otherwise. But yesterday in our discussions I guess people have told you that's probably the old tail that curves back behind the sun. And if it's really the old tail, it should sort of aim a little bit north of the sun probably. Some theories say that.

SPT Okay Karl, I'll try and get a little better estimate for you. Yesterday it looked like it was pointed right at the sun.

CC Okay, good. Glad to have that confirmed.

CC Incidentally, you are seeing this through one of the STS windows in solar inertial attitude? Is that correct?

SPT That's affirmative. Apparently the people who gave us the estimates of what we could see forgot that there was part of the panel cut out at the bottom and a few sections of that panel missing except for the support structure.

CC That's great, because these eyeball observations you're making are very important to us down here.

SPT From the white light coronagraph pictures which we've sent down, there was one day there, maybe two days ago, or so, where that one spike did show up quite prominently, at

least it did on our display up here and I was able to photograph it with the Polaroid. I'm wondering if you had done the same down there, been able to correlate the roll and see whether that spike gets pointed directly at the sun.

12/30/73, DOY 364, MD-45, 23:50: - GMT — Tapes #MC1545/2,3 1546/1

CC — Jerry, one question concerning your estimate as 4-5 times as much tail as you described yesterday. You gave the estimate yesterday, as I recall that the total distance between what you could see from the end of the tail to the point of the sunward spike was like 4-5 degrees. Is it 4 to 5 times that distance of what I think I remember as 4 to 5 degrees?

CDR — On, no, Dick. What I'm referring to was that little stubby thing we were looking at.

CC — Yeah.

CDR — I would probably guess that's probably only a degree or less*.

CC — Okay, good.

CDR — That's with a quick look.

CC — Sure, we had a question there and I wanted to get that cleared up. As long as we're talking about the comet, I've got a mission note here that gives some data in case you get another chance to get some handheld photography.

*First sketch is 1° or less.

12/31/73, DOY 365, MD-45, 00:18: - GMT — Tape #MC1549/1

PLT — I just had a good check on the comet here in the command module window, a very good look through the binoculars and I can confirm Ed's suggestion yesterday after watching it closely today. In fact, there was almost a hint that the forward spike actually almost fans back into the sort of fuzzy area that's getting in between the two tails. But the angle he drew is correct and the length of the tail and so forth, you get a sort of a suggestion of almost a complete eclipse of the tail rather than a wide fanning it down out at the extremity. I followed the comet all the way down into the airglow. The airglow consists of three (3) distinct layers as you're looking here, and a sort of a lower cloudy layer and 2 upper layers that are rather distinct to people that have studied it. And I followed the comet right down into about two-thirds of the way through the lowest level before I lost sight of it in the binoculars.

CC Okay, Bill, appreciate that. Incidentally, we appreciate you guys giving us these verbal descriptions, it's amazing the amount we've learned and enjoyed by listening to them, we'd appreciate it as long as you have a good view of it visually to just keep it up.

SPT I hope there's a good piece of it left over when you folks finally get to see it. It really is beautiful.

12/31/73, DOY 365, MD-46, 21:21: - GMT Dump Tape 365-10

CC Skylab Houston, we'd like to note that your description of the comet this morning . . .

CDR Bill, did you say something?

PLT Yeah, I gave them that description of the structural nature of the tail and the fact that the brightening was sort of graded out from the nucleus.

CDR Yeah, I thought we told them that yesterday.

PLT What's that?

PLT I think I mentioned, Ed, was the fact that the light part is not all concentrated right around the nucleus and the coma now. As I was looking at it through the binoculars it seemed to be sort of graded and graded out into the tail, there no fine demarcation at all.

CDR The comet is no longer a single ball?

PLT Well, there is a definite grading of the brightening from the coma out into the tail. It's just a bright spot and then thoroughly uniform brightness in the tail.

SPT That's what our sketch showed was that there was a grading of brightness all around the tail.

SPT What small difference now is the tail looks more like a flame. In other words, more concentration toward the base.

12/31/73, DOY 365, MD-46, 22:31: - GMT Tape #MC1584/1,2

SPT There is a planet very close to the tail of comet Kohoutek. Either a planet or a star, looks more like a planet. Could you identify that for us and tell us how far back it is in angular degrees?

CC And we think what you're seeing out there is Venus, about minus 4.2 magnitude and it's about 15 degrees from the nucleus of the comet. And Jupiter's out there at about minus 1.5 magnitude about 18 degrees from the comet in the same direction.

12/31/73, DOY 365, MD-46, 22:41: - GMT Dump Tape #365-11

PLT The comet is longer and greater in length now than the air glow is, as it is seen from the spacecraft. I think it's probably even longer than that, but all three of us agree that there was a dramatic increase in the length of the tail.

PLT I can still see a sunward spike or something like that.

1/1/74, DOY 1, MD-46, 01:13: - GMT Tape #MC1591/1,2

CC Jer, if you got a couple minutes I got evening questions on your latest viewing of the comet.

SPT Go ahead.

CC Is the spike centered on the nucleus or is it slid off to the side of the nucleus?

SPT My own feeling right now is that the spike is so faint that it's just barely discernible and you really have to get dark adapted, and I don't think we can answer a question like that with any degree of certainty at all. It's still at the nucleus but it's not completely detached; it's still coming out of the coma. But whether it's slid off to one side or not is just too faint to tell.

CC Okay, I guess that answers my next question, which is how much brighter is the spike than the diffuse brightness on the right side of the coma?

SPT Okay, that diffuse brightness on the right side I have not been able to see again. Hold on, Bill says he's talking to you.

SPT Okay, Bill, apparently on one viewing, was able to look away from the comet itself, the nucleus of the coma and see that diffuse material and feels that it's approximately about the same intensity as the spike itself.

CC Okay, and one last one. Are both sides of the spike equally sharp or is it diffuse on one edge. And I guess since you're not seeing it that clearly that one may be a hard one to answer.

SPT Okay, Bill, has the impression that the spike is really diffuse, just almost leans all the way around. It's relatively sharp on one side and then becomes diffuse and the material then is diffuse all the way around to the dust tail.

1/1/74, DOY 1, MD-46, 01:13: - GMT Tape #MC1591/1,2

PLT It reminds you of being on a dolphin.

SPT Being on a dolphin I guess is the word that Bill comes up with, but it's very, very faint. We're going to continue trying to get really dark adapted and then look at it, but you don't have long.

CC Okay, that's it.

SPT One thing we certainly have noticed though, that the tail appears much longer. The tail has swung around so that we're getting more of a perpendicular angle on it relative to its axis that we were before. But it certainly is beautiful as the tail gets longer. It's a shame that you folks down there can't get to see it. I hate to hog it all; it's certainly a beautiful sight.

1/1/74, DOY 1, MD-47, 23:44: - GMT Dump Tape 01-007

SPT Now, another way to observe it and we don't bring back any data, other than what we've put in voice and have been able to sketch, is the use of binoculars. And this is just a very enjoyable way to do it. I'm sure that some of you, once it becomes visible to you at night, will be looking at it in the same way just after sunset, the same we are now. We get 15 sunsets a day, however. It's really an impressive and enjoyable sight, very awe inspiring. I think what it does is make you really appreciative of good old Mother Nature. It's something I know you'll all enjoy.

1/1/74, DOY 1, MD-47, 22:33: - GMT Tape #MC1620/1

SPT Story on this time around, the comet is so faint that I could not see it's initial location. Go ahead and play the hunch and move it further out, and sure enough it appeared. But I could only see it when it was at least outside a radius of 120. And it was more easily seen if it was in motion which I had to do when I was making the maneuver. It won't be long before we're going to be in a tough situation as far as finding it optically on the WLC.

1/02/74, DOY 2, MD-47, 00:08: - GMT Dump Tape 01-007

SPT ATM operation, this is JOP 18D, the ones that began with the maneuver at 22:06. Okay, I thought when we first pulled in there and I was looking at the comet rise that I had lost this one for sure. Couldn't see it anywhere. I think it was just on the fringes of visibility. I made a maneuver outward in a radial direction and it showed up and went right off the scope. I maneuvered back around about half way and I had it in sight and could work with it from there on. But I think we ought to work with something greater than 110 now. I suggest we try to get into 130. It's really getting faint. (On ATM Display).

01/02/74, DOY 2, MD-48, 01:42: - GMT Tape #MC1629/1

CC Skylab, I've got some evening questions on the comet. These come from Dr. Keller, Co-PI on the S082. Calculations of the comet's dust tail for today show the tail length to be about 4 to 5 degrees from the coma and pointed in an anti-solar direction. Could you say something about the length of the dust tail that you observed to compare the actual length to the theoretical-length?

SPT I'm thinking 4 or 5 degrees is probably a reasonable figure. I think it was a little larger than that yesterday when I saw it. In our estimation, using the figures that you gave us for the distance of Venus and Jupiter are worth looking at just about a half or so of that length to what I saw it as previously. But today I could probably always say it went back maybe a third or so of that, so that's like 6 degrees or so.

CC Okay, how much of the field of view of the binoculars is filled?

SPT Probably just about almost a full field, maybe 3/4 of it or so. I never really have tried to make that measurement, but it's just about 3/4 I'd say.*

*7°FOV

CC Okay, we expect the plasma tail to be fainter but longer than the dust tail, dominantly blue in color and on the leading edge, that's the east side of the dust tail. Tails will be hardly separated since the earth is only 5 degrees above the comet's orbital plane. We'd like to know if you could discern any blue streamers or kinks in this location?

SPT No, I know what they're looking for and I've not been able to do that. Once you get away from the coma itself, it is very faint, and trying to distinguish whether you're seeing something of just a uniform dust or whether you're seeing something which has a kink in it is really extremely difficult. The color has changed though, significantly, from what we reported as orange a couple days ago through a yellow-orange yesterday to almost a yellow-white today. I've been putting some drawings together and maybe we'll give you a little more insight on that tomorrow when we get a little TV time.

01/02/74, DOY 2, MD-48, 19:17: - GMT Tape #MC1649/1

CC Okay, Back to Ed. Has the comet Kohoutek lived up to your expectations? Over.

SPT Okay, I think it's lived up to my expectations in terms of the what we're learning from it scientifically, especially in terms of the spectra which we've taken with one of the ATM instruments. By that I mean the ability to analyze what is the composition of the materials in the comet. We've been able to point to the comet quite well using the ATM instruments, and we've been able to get some fairly long-term observations of it using many of the corollary instruments and some of the handheld photography. It's lived up to my expectations, also, in terms of just shear appreciation of it. It's a beautiful sight.

01/02/74, DOY 2, MD-48, 21:09: - GMT Tape #MC1657/2

SPT Okay, the brightness by eye does not appear to have dropped as much as I had seen it on the WLC, but still that's a very subjective thing. And they may have different gains and it's a very hard judgement to make.

01/03/74, DOY 3, MD-48, 01:34:35 - GMT Dump Tape 002-06

SPT What I'd like to show you here is a closeup picture which is the first evidence we had that the comet Kohoutek had a sunward spike. It's a polaroid picture which was made of the WHITE LIGHT CORONAGRAPH TV Display. And, although it admittedly is very faint, the features that we will talk about, and have talked about are evident, at least on the photograph, and I hope that they are on your TV. The first feature; one which was perhaps the most easily noticed one, of course, was a bright dot right in the center, and that's the coma. The second feature is just the very start of a tail which you see right here on the right hand side. And, again, that's very faint but I believe discernible. And lastly, the sunward spike which comes in from the lower left may be 30 degrees below the horizontal. We were able to see this feature. This is perhaps our best picture. We were able to see this feature for three different times, or so, during the time period which we were observing it on WHITE LIGHT CORONAGRAPH TV display. Most of the time it's just a very bright dot representing the coma which is in evidence to us. That just gave us a hint before we went EVA that we might see a sunward spike and kept us looking for it. What we'd like to do tonight is to show you some of the sketches which we've made of Comet Kohoutek. We have no way of giving you live TV of the comet, unfortunately, so we've tried to make sketches from day to day, especially after perihelion when it became most evident and most dynamic. And in that way we try to relate to you some of the features which eventually will show up on some of the film we bring back. We hope it will give you an earlier insight

into what the comet appeared like and its changes. The first one we're showing you here is an overall impression we have, as we did not make sketches at the time of the comet before perihelion. An again, this is just very crude; it's just meant to give you a data point at which to start out so that you can see the change in the following sketches. Again, a quick look, you see a white ball with just a bare evidence of a tail. When you get a little better dark adapted, you can see a white ball, of course, the coma and a tail leading backwards. And I would say that the longest we ever saw it, when it was still visible to us, was something on the order of 1 to 3 degrees, depending upon how well dark adapted you were. And this is all preperihelion. We're estimating here, roughly 10 days or so ahead of time. When it got very close to perihelion, of course, we could not see it either. Here is the way we saw it on our EVA day. We've already given you this picture once before. We've reformatted it a little though. Also, on an earlier TV just before this, I tried to give you a closeup of what we saw on the white light coronagraph TV display which did have a slight evidence of the sunward spike. What we're showing here is first of all the coma, very bright to us. The appearance, or color of it was yellow. And most noticeable was the yellow-white spikes protruding forward. And we say yellow-white because you have the impression there was a little yellow in there, but relative to the coma and relative to the tail, it did not contain as much yellow. The sunward direction is here. And in the TV we're going to show before this a closeup that the spike is going toward the sun, which we could talk about further as far as orientation of that picture. Right now, I'll press on though to tell you a little bit about what this bottom drawing is and what it represents. They're a very crude picture of isophotes, which means just our mental image of what would be equal intensities of radiation. Of course, the center of the coma is the hottest in an intensity grade as you go further out. And then these are lines of equal intensity back here, and they're rather sharp in that they are flat on the back. This is a contrast to what we've seen later on. The size of this was around 4 to 5 degrees, that we could see overall. And again, this was the day after perihelion, day 363. On the following day, 364, the tail became much more evident to us; it was significantly longer, as a tail swung around and allowed us to see more of it from the side. And it also was the orangest, if there is such a word. It was most orange as we have seen before and after. And the sunward spike was yellow now, very definitely yellow. And the tail was yellow, with perhaps a little bit of orange in it,

but coma itself, most certainly was very orange. On the following day, the tail was even longer than the previous day, which was 6 to 7 degrees long. Here, it was not quite as orange. And we still noticed as I should have pointed out in the previous drawing, that there is a sunward spike and a little bit of material in between it. The sunward spike had faded quite a bit. I shouldn't say sunward because perhaps that's misleading. It was not always right on the same axis as the tail, which was pretty much anti-solar now. But it was pretty close to it. It was pretty tough for us to estimate which was really pointed straight at the sun and which was straight away, but there was a slight angle still evident between the two. Colors here were a yellow-white, for the spike in front, and yellow, primarily, for the coma and the tail. And we had some assessment of the length of this by finding out that Venus was 15 degrees away and Jupiter was 19 degrees away. So we had a reasonable way of making an estimate of the length of this tail. And we came up here with an estimate of 7 to 8 degrees. Again, these were pictures or observations out of the command module and one of the windows in the STS, structural transition section, window number 3. Now this day, one thing that really occurred to me, as I looked at it, it looked very familiar and I couldn't figure out why. Till I all of a sudden realized that it had very much the appearance, as we were looking at it, of a rocket which is burning in the upper atmosphere, say the second stage of one of the Apollo series. And you see the very intense white center, which is the exhaust plume, itself, right close to the nozzle. And then because the atmospheric density is very low, you find that the plume tends to spread out, very rapidly, but very faintly, around the side. And then you see the major plume protruding backwards. And it looked as though we were seeing a rocket exhaust plume, maybe 45 degrees or so off the axes. Again, here are the drawings of isophotes, if you will, lines of equal intensity. And here they're more elliptical, as you see. What you really ought to do to get a proper image of all these is to integrate, if you will, between these two. Here we've tried to just draw schematically what it is. Here we've tried to put a little more into it in the way of intensity information, but you really have to combine the two. Neither one tells the story. This is the first day of the year, the New Year Day. And here we estimated the length as decreasing around 5 to 6 degrees. Still yellow-white. And here we could not say that this spike was here at all. Sometimes when you looked at it, you thought you saw it, and other times you didn't. So rather than mislead, we said well, it's questionable. Maybe our mind's eye pictures it, but

our eye really doesn't. And again, we saw this material coming off the side of the coma which we could not really trace this one back, for example, but you could certainly trace the major stream of the tail all the way back. And again, these lines of equal intensity now being more elliptical, as opposed to what we saw the first day after perihelion. And lastly, we have today. And here the question is, is there really a spike at all. And we draw it in yesterday; today we can't say there's any at all. Probably not. We could not see it at all, even in our mind's eye. Perhaps we'd talked ourselves out of that day after it had vanished. And the tail, again, is a little bit shorter, 4 or 5 degrees now. And, as I pictured it, it tended to be a little bit fatter, in my estimation, but again, this is very qualitative. And the lines of equal intensity resemble what we've seen before. And just an overall general impression is that its tail is becoming a little bit shorter as - at least the evidence of the tail is becoming shorter as we move further away from the sun. Also, the color now is just plain white. We see no evidence of yellow at all. Okay, Bill would like to add something.

PLT Ed has it in the drawing, the tail that you see here has a sort of a ragged appearance. And this was the first thing that impressed me. The fact that it was fading and the tail was taking on a ragged appearance, back toward the tail, the end of the tail.

SPT Well, that's it for now from Kohoutek observation headquarters. We'll try to keep you up to date as we see any changes. It's been most interesting for us and we hope we've been able to give some useful information to you on the ground. I wish you all could see it.

01/03/74, DOY 3, MD-49, 21:43: - GMT Tape #MC1691/1

SPT Just barely able to see a comet. The only way I can see it is when you get it out to the very edge of the display and you move it and it's just like moving noise on the scope. I was able to pick it up, however, and got it located and we are doing the work on the tail right now. I conclude that what I was supposed to do was go from the position of which I had, which I reaffirmed after the long exposure from the first building block.

01/04/74, DOY 4, MD-49, 00:40: - GMT Tape #MC1702

CC Ed, we see a good maneuver time and could you make a comment now on the relative brightness of the Jupiter and the comet. We show Jupiter minus 1.6, could you relate to comet to Jupiter in terms of brightness?

SPT Yeah, Story the comet now is quite a bit fainter than Jupiter, around 2 or 3 days ago, again that's a rough recollection, they were of comparable magnitude.

01/04/74, DOY 4, MD-50, 14:19: - GMT Tape #MC1711/1,2

SPT Hello, Crip. Wonder if you could give me some information about a star near the comet.

SPT A little bit broken. I'd like to get some information on a star very close to the comet. As you're looking at the comet with the nucleus on the left, tail going to the right, there is a star which is around 3 degrees back and 2 degrees down. It's the only relatively bright one in the area. I wonder if you could tell me what that one is and what its brightness is.

SPT No, Venus and Jupiter are quite a bit further back. It would be useful to know what their distance is. It used to be somewhere around 15 and 18. I think that's clearly, but it's not those.

(later)

The comet looks just about in terms of intensity like Dabih on terms of brightness. It's certainly a little bit larger, but its totally integrated light looks to be about the same.

CC Ed, in answer to your question, Venus is approximately 7 degrees back from the comet now. (NOTE: The star was identified as -Capricorn, commonly known as Dabih, magnitude +3.2.)

01/04/74, DOY 4, MD-50, 16:21 - GMT Dump Tape 004-05/ D-491

PLT Okay, this is the voice for the comet description for today. Get myself situated here. And get a few notes out. Thought I'd talk about two things today regarding the comet. First, a review and update on a general description and an appearance of the comet. Secondly, describe some of the observing techniques we've used onboard here, and explain why it is we use certain terms of reference like, the comet seems to be so many degrees long instead of so many miles long. First, on the general appearance it's very similar to the sketch yesterday. If you will notice here we've tried to indicate that there is a sort of a bright area here in the region of the coma which is the darkest spot that appears on the drawing. Of course, that is the lightest spot in the comet, as we see it in the night sky. And that there is a more or less, a subsidiary brightening just behind the

coma represented by these, more or less, elliptical half circles, the half lines here. And that the comet bend takes on, the more or less, tail like appearance, and which is characteristic to the comet. And I've indicated two areas of shade here which will become significant a little bit later. So we still have the comet as it had in the past. Right now, it appears to be entirely white but by stretching your imagination a little bit you may be able to see a little yellow in it, but I'm not personnaly convinced that you can, although I get a hint of it occasionally - depends on, more or less, where you focus your eyes. As far as the shape is concerned, we've lost the forward spike almost certainly. We do not see anything out in front of the coma. If we look full out in front of the coma, previously we had a spike out here. Now that we have shown it, it has disappeared from the drawing and we say we no longer have the spike nor do we have the more or less gossamer like branches that we showed off between the spike on the narrow to the smallest angle between the spike and the tail. So now we have just a bright coma and the tail. One thing this is more or less interesting to look here is to compare the size of the comet with a more or less garden-variety. My picture here right. First off, you see, was such a faint object and we can't even see it, is why the astronomers are so interested in it. And I think that if we look at the bar chart here that I've drawn from star along the top here this represents the length of the comet as we see it. It extends from its coma back to almost the planet Venus. Now, I'll talk a little bit more about how we know that in just a moment. But it extends to almost about that far which is roughly 6 degrees. And that, course, is the length the comet's represented by this dark, long bar. And this bar here is actually slightly exaggerated. This represents the distance between the earth and the moon. So it is about a 30 to 1 ratio. In fact, the this distance here represents anywhere from about 7 to 8 million miles or maybe 6 to 9 depending on the frame of reference you want to use to say chop the tail off and say it no longer exists. I say it just because the more part of the interplanetary material. Anyway, this represents approximately 8 million miles, I'd say, and this is rather large object in the solar system. It has properties which the scientists are very interested in and the dust that's in this tail here and the gases that are generated off this nucleus provide them a lot of information regarding not only what's in the comet itself, but some very interesting things about the sun. Of course, they are using this as a scientific probe of the sun itself in some respects. Okay, so

this is what we're seeing now and we're saying that the cometary tail extends from the coma back almost to the planet, Venus, and this planet represents the planet Jupiter, and here is a star, I think Dabih; I'm not certain of that. I think this is in the constellation Capricorn and there are three stars here which are represented as they appear to you and when you're looking out the window. Okay, now as far as observing techniques there are a couple of things that one has to do if he has to dark-adapt and you can do this by closing one eye prior to sunset. We get at the window where we're going to make the observation and we dark-adapt one eye keeping the eye open and then we watch the comet after sunset. Now as soon as the sun sets, then you can actually visually acquire the comet with the unaided eye. At sunset the comet appears to be about this long, if you'll notice I didn't shade differently here. And as the sun goes fully below the horizon and you get better night adaptation, you start to pick up more and more of the tail. We look at it leisurely with the unaided eye and also with binoculars. The binoculars help us see it; they also help us estimate distances. We know how wide a field of view the binoculars provide, and by looking and seeing how much of the field of view the length of the comet takes up, we can estimate that in degrees. And this brings up another interesting point as why we estimate this in degrees instead of miles. Well, of course, when you're looking at objects out in this deep space and you don't know how far away they are, then all you're doing is measuring probable distances between two lines of sight, between one star and another star. The stars may be different distances away, so it's very difficult to say one star is so many miles from the other, so we use angular distances. And anyway, we use the binoculars and we can estimate the length of the cometary tail and, course, from the comet to the tail by seeing how much the field of view in the binoculars it takes up. Another way to estimate the length of the tail is to notice its length in relation to other night sky objects.

01/06/74, DOY 6, MD-52, 13:50 - GMT Dump Tape #006-06,05

SPT Let's talk about another way of recording information on comets. We have the advantage up here above the atmosphere. We've been able to see the comet. All the way since it started far out from the sun and came in. It's undergone a lot of large changes and now it's on its way away, and again, it's changing. What we've tried to do is to not only record with the instruments on the ATM, with the instruments down in the airlock, but also to try to put down on paper what we see by eye. We've done that with sketches and here the

trick is to try to put down the details as accurately as you possibly can and still get across some of the essential points which tend to stand out in your mind. The form, the brightness, the color, and how it changes are all things which have been evident and kind of interesting to us.

SPT What I'd like to do now is to show you some of the sketches we've made and to take you through a little history of the comet with those sketches.

01/06/74 DOY 6, MD-52, 13:53 - GMT

SPT It was a very faint object initially. And when you first looked at it, about all we could see was just the bright coma, which is a very bright region around the nucleus; the nucleus being the real substance of the comet, the coma being the very bright intense material around it which is reflecting a lot of sun light and in some cases fluorescing or emitting a little of its own, as it receives sunlight. And the last part we'll talk about of the comet itself is the tail, which is a very long and elegant, graceful structure which we see coming out behind it. The color initially looks white. We could not distinguish any blues, or oranges, red in it. Now once you got dark adapted, that is, once you were able to keep yourself in a dark location so that your eyes could adjust to it, you could see much more of the comet, particularly the tail which is relatively faint. And you could see it extending back. And it was still relatively short in the days before perihelion. We were judging it was around 1 to 3 degrees or so that we could see it. And since the comet is quite far out, on the order of 100 or 1,350,000 miles, which is quite a distance. These 3 degrees would translate into quite a large number. That is, even in the early days as comet was about 11 times the distance between the earth and the moon. I think we all have some sort of gage for that now, seeing as it took us 3 days to get to the moon and 3 days to get back going at some fairly high velocities. This thing in its infancy was 11 times that length. Now the next time we got a really good look at the comet was the day following perihelion and we saw it first when we were outside doing an EVA, getting some data on the comet with some of the instruments we took out with us. Now, here it took on quite a different appearance. The length first of all was a fair amount longer 4 to 5 degrees or around 25 times the distance between the earth to the moon. And it was extremely bright. By that I mean we could see it when we were EVA even with one of our protective visors down, which is something like a very light pair of sunglasses you might wear at home. And it was essentially dividing into three different

sections: the coma, which we've seen before; the tail, which now was quite a bit wider and quite a bit more intense than we've seen before, more intense right next to the coma; and then there was a spike, which was going straight forward and it was heading for the sun. I was very close to the sun at this time. And the spike was most pronounced. There was some material which we could see in between that. It was very faint relative to the other features. But we saw it enough times to believe that it really did exist. Now what I've drawn down here is something to try to give you a little better feel of what the intensities are like across the comet and the coma. First of all, these lines, each one represents a line of equal intensity. By that we mean take this circle here in the center, for example, that's the most bright. It's like an elevation map you might see for a mountain, for example, where you show the rings in equal altitude. Here we're showing the rings of equal light intensities. They're called isophotes. As we move out into the tail, this is next most intense and then the region in here. Finally, further out it fades out and these eventually will close too, further out. This line representing fading emission between the light going forward and the tail. On this day, it was really a beautiful sight. We could see it EVA. We came back in and were able to see it out a few of the windows; one in the structural transition section, the number 3 window. And later on we could see it in the command module as well. On day 364, the following day, the tail had swung around so we could see much more of it. During this period, as it went by perihelion, the tail swung from one side of the comet over to the other side, from right to left. Well, left to right, depending upon how you were viewing it. We have always drawn it so that the tail is going off the right for simplicity, for comparison. See the tail had grown to be quite a length. The total length being around 6 or 7 degrees, which is around 36 times the distance between the earth and the moon. And it was still very bright. Now in the color, we could see that it had a slight amount of orange to it. It was detectable, perhaps it was there the previous day. If we had looked for it and keyed our minds to it, but until something really comes and hits you, you're reluctant to say that it's there. And that's the way we felt in these observations. But here we could definitely detect a small amount of yellow and orange. The previous day, it was primarily orange and white. I'm sorry, it was yellow and white the previous day. I've never really seen it orange. The spike was still there. The tail had grown in length in terms of as it turns to us because it now has become -

rather than looking at it, if you will, like a pencil almost edge on, it now had swung around so that we could see its full length. And lastly, we had down here our drawing of isophote lines in equal light intensity. Then again we see that we had these regions here. They're not quite as abrupt you know, a little bit more rounded here. The previous day, they looked fairly abrupt in their cut-off. Here they tend to extend out into more like an ellipse, one end of an ellipse. Here's the day that we saw it where it was still close enough to the sun that a lot of the tail still showed up very well and it was nearly perpendicular to our line of sight, that is, it showed up it's full length now. The way in which we see this, of course, is the sunlight comes and reflects off of either fine dust particles in here, which we believe that most of this was. And the reflected light from those dust particles arrives at us and we see it, or if there is any gas in here, it'll cause that gas to emit certain lines, fluoresce, if you will, light from one energy comes in and the atoms absorb that light and emit light of a little lower energy, which we can also see.

01/06/74, DOY 6, MD-52, 14:02: - GMT

SPT Now, here again, the length was 7 to 8 degrees as we can judge it. In all these observations, we've used a pair of binoculars in order to make our closest observations. However, on these days, we could see it very well by eye and see all of these details even without the binoculars. Binoculars just helped us home in a little bit more. So it was 7 or 8 degrees, 42 times the distance between the earth and moon, and it was very bright. Now here this reminded me very much of what I had seen before. I couldn't quite place it initially. But I looked at it several times and all of a sudden I realized that what I had seen before that very closely resembles this was the exhaust plumes of a rocket at high altitude. We see a lot of them lift off down at the Cape. And what you see down there when it gets to high altitude is first, a very intense emission right close to the tail of the vehicle, very close to the exhaust itself, the nozzle. And then you find that the material tends to bellow out and come rapidly back. It bellows out because at high altitude the pressure in the exhaust plume is higher than surrounding pressure and the gas just tends to come out, bellow up very rapidly. And then it gradually decreases in intensity as it goes straight back. That's very much what this reminded me of as I looked at it. The color here again we did not see the intensive orange or fairly bright orange that we had seen before had tended to

drop away. We saw the spike which was fading now. We saw that as a yellow-white again; probably we had to hedge a little on that because it was relatively faint. And when it's faint, it's more difficult to determine the exact color. And then the tail itself, which was yellow and extended back as I say quite a distance. We could see the way in which the intensity dropped off here and again it was like a series of ellipses with essentially one end up here close to the coma. There was something also in here which started to pick up and that is a mottled appearance. That is, when you looked at it, you could not always just see a uniform structure fading back into just a fainter and fainter feature. It also appeared mottled. And we'll see that in subsequent days. The first day of the year, New Year's Day, and as we observed it and we saw it to be a little bit shorter - not that the material was not there, but it being a further distance from the sun now, it had less light to reflect and, therefore, appeared to be smaller. Then we .... find the 6 degrees in length, 31 times the distance between the earth and the moon. And it was still quite bright. Not anywhere near as the brightness that we've seen in the previous 2 days, especially the first day when we were EVA. We could not tell really whether the spike was there or not. Sometimes we thought we saw it; sometimes we didn't. It was really in mind's eye perhaps a good part of the time. So we put it in there with a question mark. We could see some bright fuzziness, if you will, right next to the coma as the material came off. And then the tail, which went straight back, was yellow-white or white with a little bit of yellow in it and a slightly mottled appearance. And the tail tended to become a little bit smaller in width as it went back; it just gradually faded out. That's what this series of isophotes is intended to show. Come up on day 2, 4 to 5 degrees, with a length around 25 times the distance between earth and the moon and it was still bright. It was white. We could not see any forward spike. We put a question mark in there, not knowing whether it might show up if we took long time exposures with a camera, but we could not see it. And it appeared to bellow a little bit here and then move on back, with this slightly mottled appearance pretty much the same as we had seen it the day before, only just a little bit shorter. Most of the yellow color that we had seen previously has disappeared. Day 3, here again, for some reason we could see it a little bit longer. Now there's two reasons for this, either, of course, that it was longer and in our field of view, that is, it had swung around so it was more perpendicular, although I don't believe that's the cause in looking at the geometry of the

situation. Or as it got further and further away from the sun and airglow, which is right on the horizon as the sun sets, we were able to get better dark adapted. Our eyes could adjust better as the comet was further away from the sun and I believe this allowed us to see more of the features. So when I give a distance here of 5 to 6 degrees, even though the previous day was only 4 or 5, what this means is that we were better able to see it, not necessarily that it had grown in length. This distance here would be like 31 times the distance between the earth and the moon, quite an appreciable distance. It's quite a large scale phenomena and we really can't appreciate that until we start looking at some of these numbers. Now it was white. The coma and the tail were just plain white. Still the somewhat bellowing appearance, a little bit of this up close to the head coming off, and the isophotes down here also depict that. Day 4. Again it was long, 6 to 7 degrees, and I believe this is because we could get really well dark adapted and we could see the very faint features of the tail go out quite far. It was white up around the coma; it was medium intensity or so - not in emission but in light intensity, and around 36 times the distance between the earth and the moon in terms of observable length. Now when I give you these intensities, I'm hedging a little bit by giving you words like bright or faint or medium intensity, very bright. I'm doing that purposely because we have no way to make accurate, quantitative measurements of the intensity, so I'm just trying to give you a feel on a relative scale of what it appeared to us. The color of the tail now, as we looked especially further back and we get very dark adapted, seemed to have a small amount of violet to it. It was white, but it also had a little darkness in it which appeared to us to be of violet nature. Down here we see the isophotes again, and we denoted that there was a star here very close to it. For this drawing up here it was around 2 or 3 degrees back and a couple of degrees down, the star Dabih. And here's yesterday how it appeared to us. And the tail now has become a little shorter in length, visible to us anyway. Four or 5 degrees, 25 distance between the earth and the moon, and it was faint. Fairly difficult to see. There's Jupiter and Saturn, two planets which are out close by; and if you get them in the field of view of your binoculars, it's very difficult to see the faint features of the comet because your eye tends to adjust to the much brighter features of the two planets. It appeared white up around the coma, with the coma appearing much smaller to us now than on earlier days. And now we see back here again this white violet, and there is no longer any question. We did see

violet in the tail. Whether this is because we were really looking through the tail at some slight amount of airglow, which I doubt. Whether there is actually violet emission from the tail, we can't be sure. If it was this violet or blue it could tell us that we were looking at part of a gas tail as well; although it did coincide quite well with the dust tail, and we don't want to try to interpret that right now. We're just giving you our observations. That's what we've seen in these days from our early observations on through day 5.

Day 6 is in preparation now. We've seen the form change quite appreciably even when it was very close to the sun. We have seen it shrink down a little bit, and then we've seen it grow again as our eyes become dark adapted and see the tail. We've seen the color go from a white to a yellow to an orange back towards a white and finally show up with a little bit of violet in the tail. And it's brightness changed quite drastically from something which was very dim, maybe an order of magnitude star of 3 or 4 on up to something which was maybe a minus 1 or 2 on the scale, and then on back down toward a lower intensity. And we've seen its tail become quite long, up to 5, 50 times the distance between the earth and the moon. So it's quite a large structure out there. (Figures A-1 through A-10 are Dr. Gibson's sketches discussed here together with postmission artist's concepts.)

01/06/74, DOY 6, MD-52, 14:13 - GMT — Dump Tape 006-05

SPT Well, we've enjoyed looking at it. We hope these have been useful to the people who are studying comets. We'll certainly be interested in comparing these when we get back, and we hope they've been interesting to people who are not professionals in the field, who are studying comets, but just for the curiosity about what are one of these structures like. And we hope you've been able to appreciate it a little bit in the same way we have.

01/07/74, DOY 7, MD-52, 01:19 - GMT — Tape #MC1817/2

CC Was the comet ever as bright as Venus? If not, can you estimate how much fainter it was at its brightest.

SPT No, it was never as bright as Venus by a considerable margin, but I'd have a tough time giving you any kind of a quantitative assessment of that, Bruce.

CC Okay, and you put some comet sketches on the TV today, we'll get those back into site here later on tonight. Do you think it's worthwhile doing TV of comet sketches later, say day after tomorrow or anything like that?

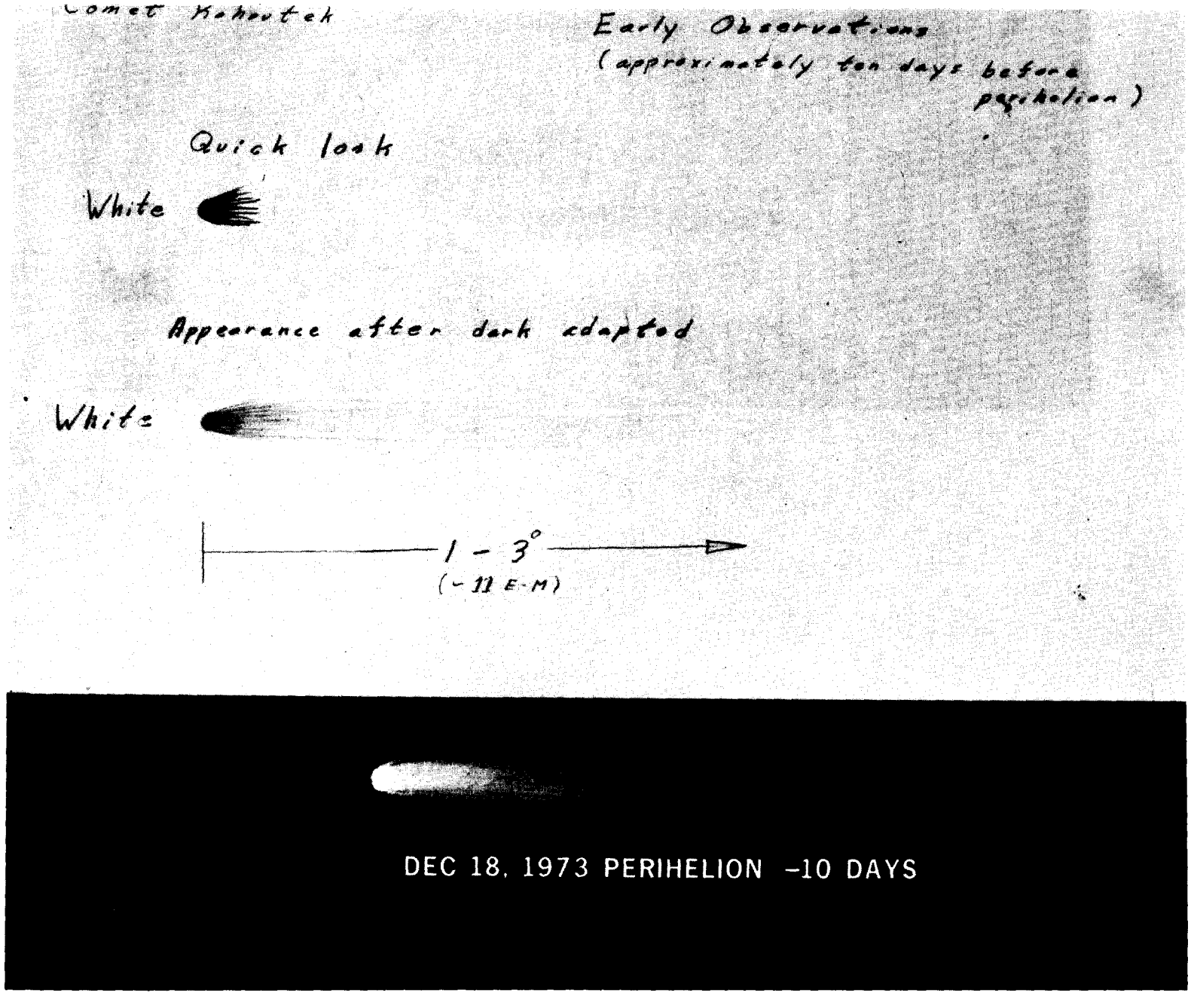

FIGURE A-1. COMET KOHOUTEK, DEC 18, 1973

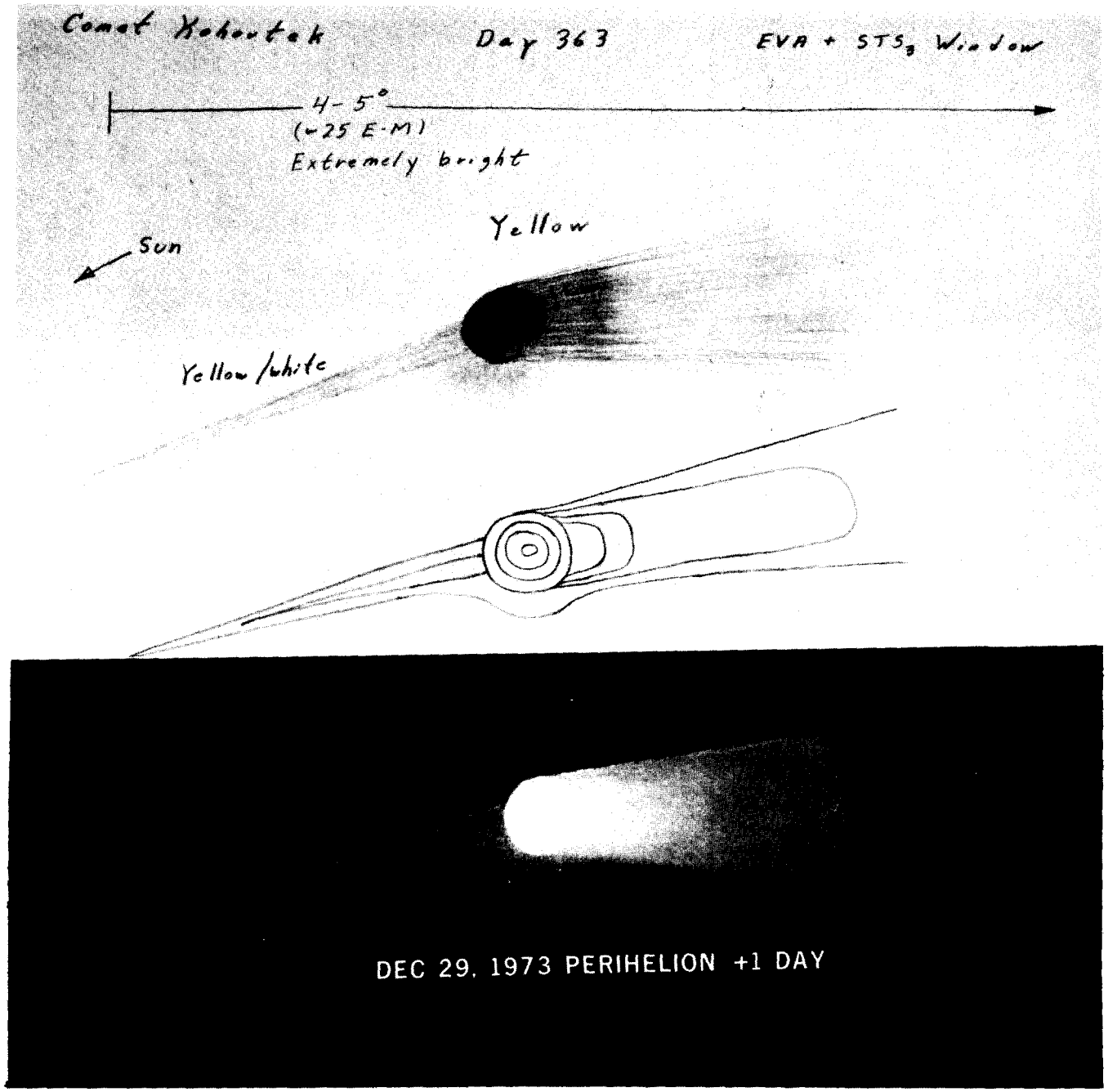

FIGURE A-2. COMET KOHOUTEK, DEC 29, 1973

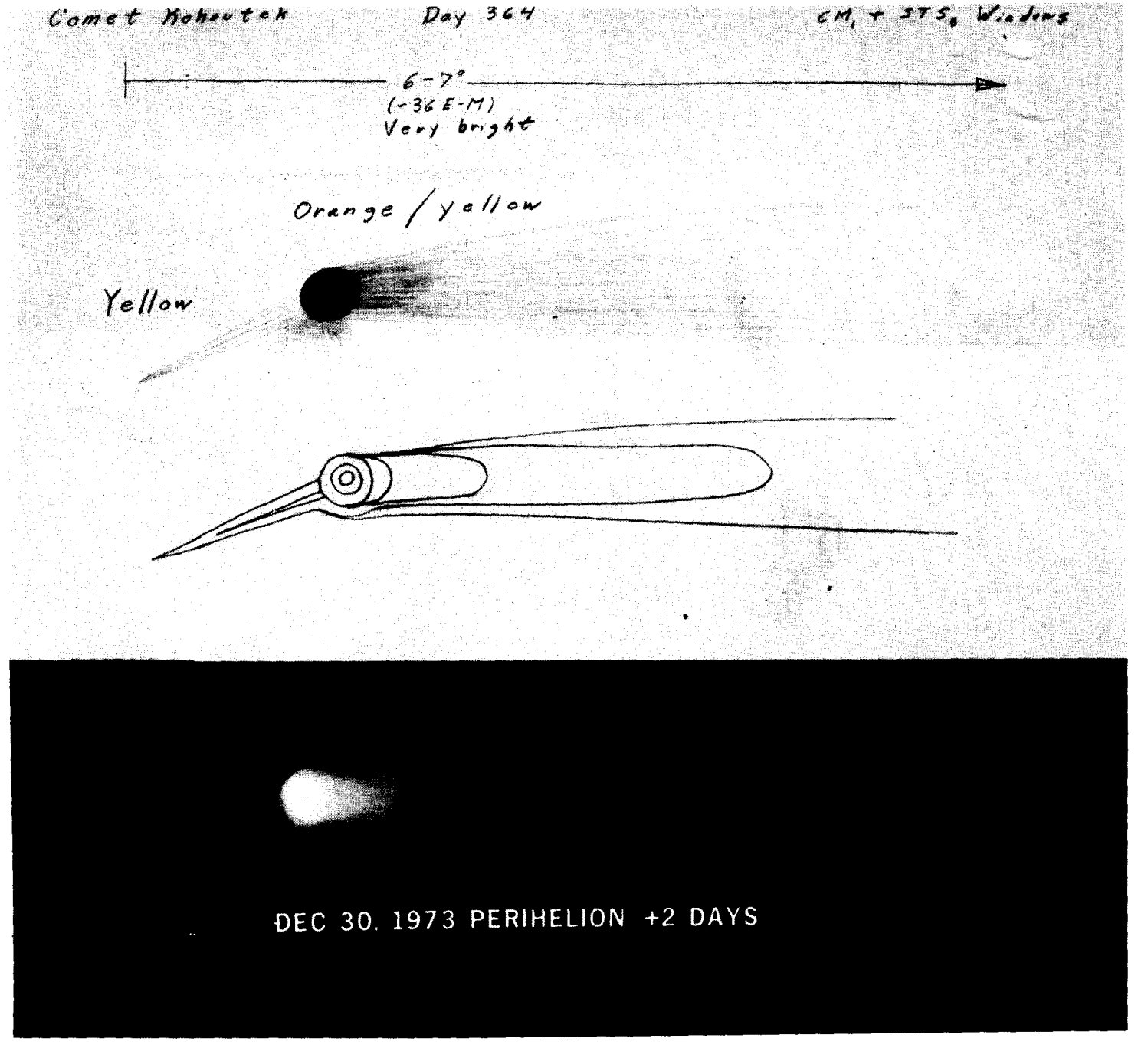

FIGURE A-3. COMET KOHOUTEK, DEC 30, 1973

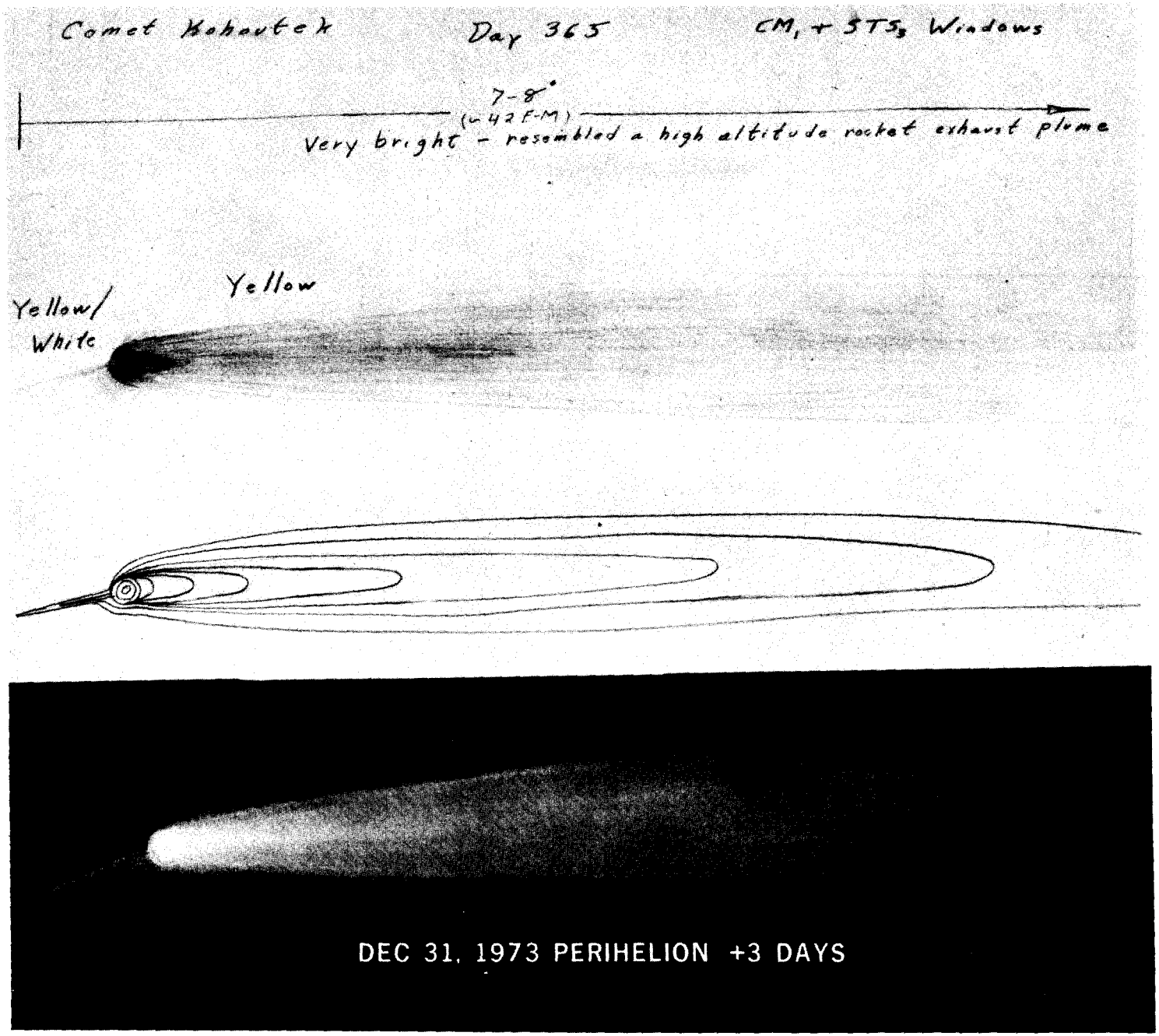

FIGURE A-4. COMET KOHOUTEK, DEC 31, 1973

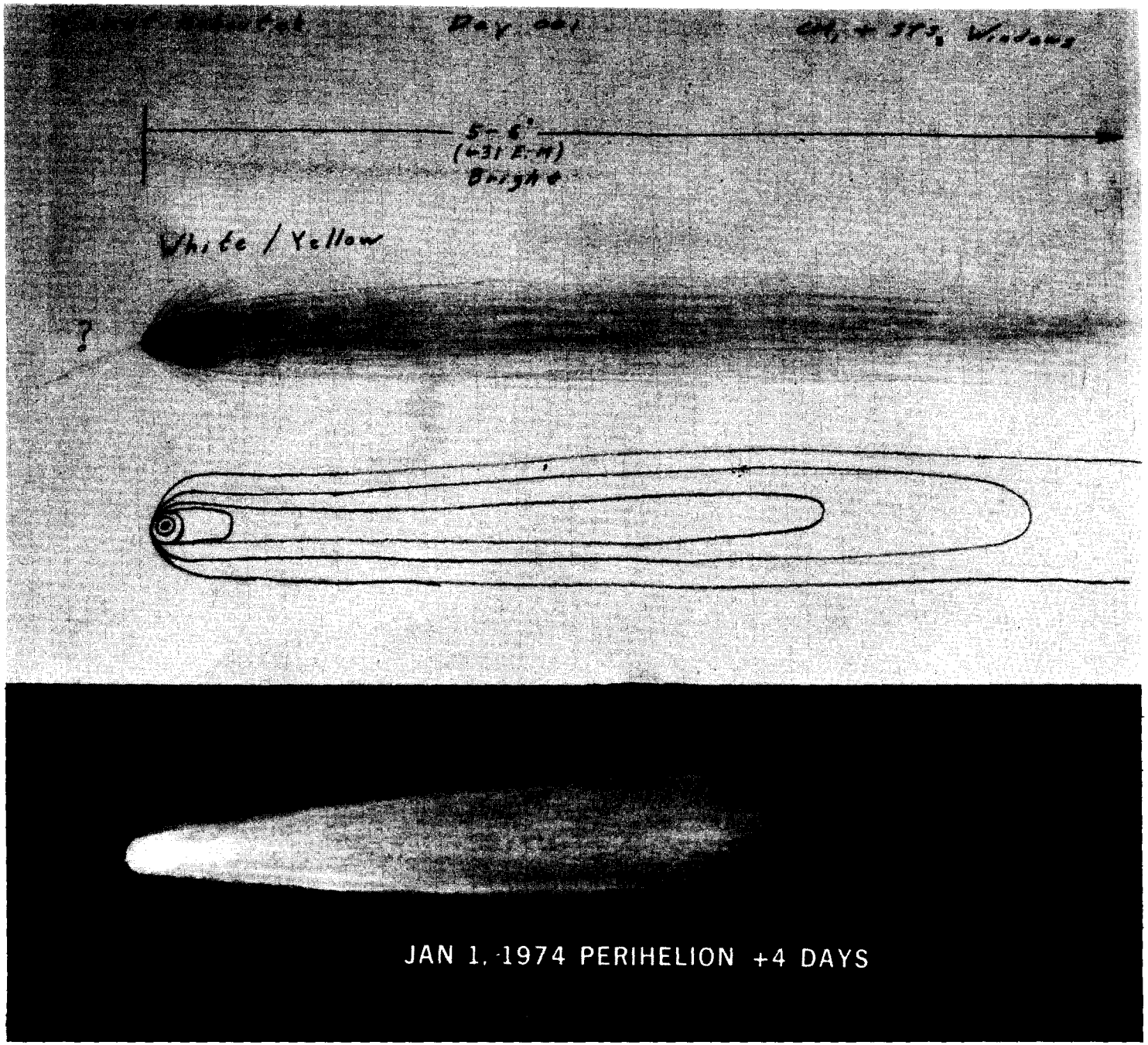

FIGURE A-5. COMET KOHOUTEK, JAN 1, 1974

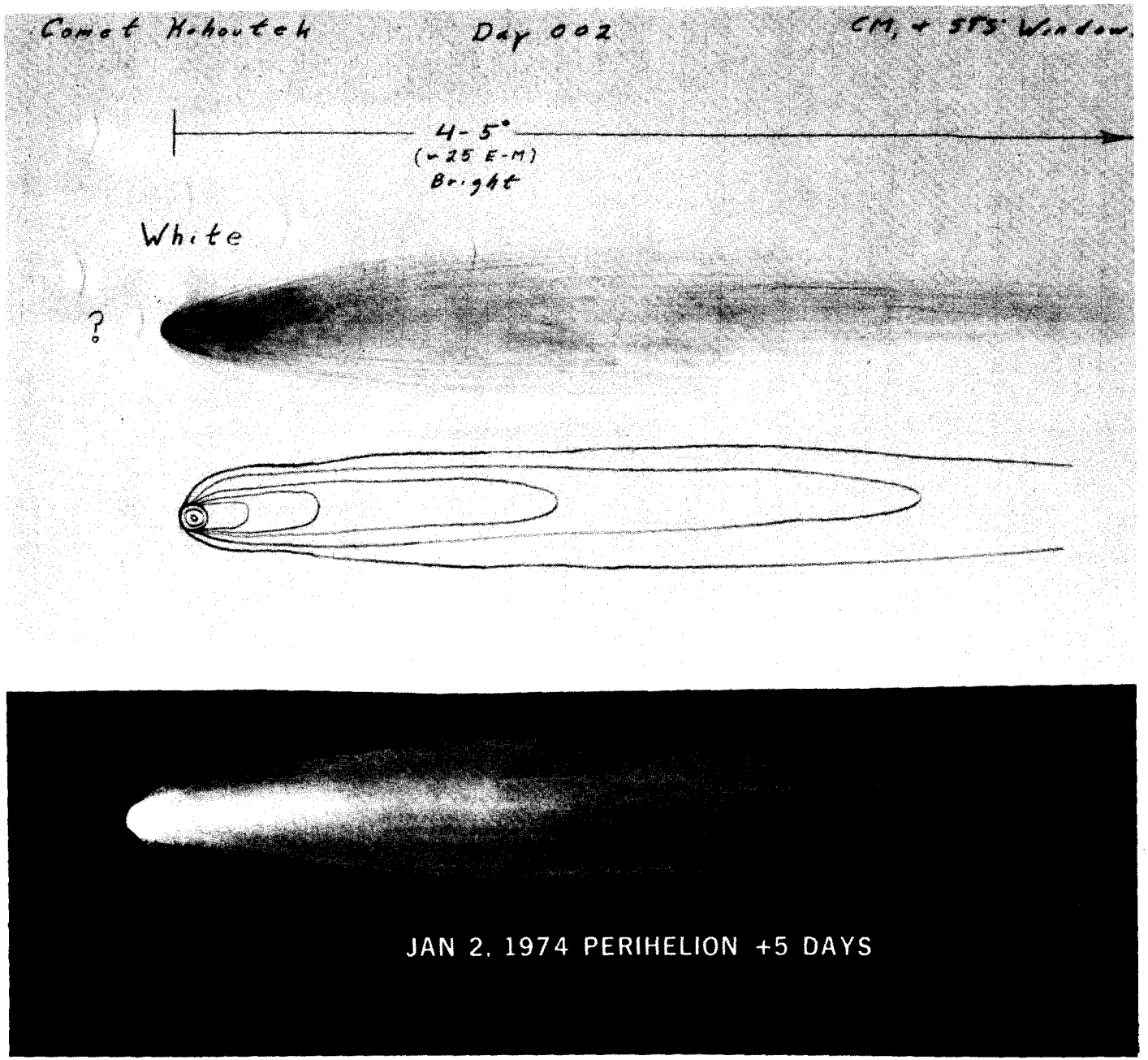

FIGURE A-6. COMET KOHOUTEK, JAN 2, 1974

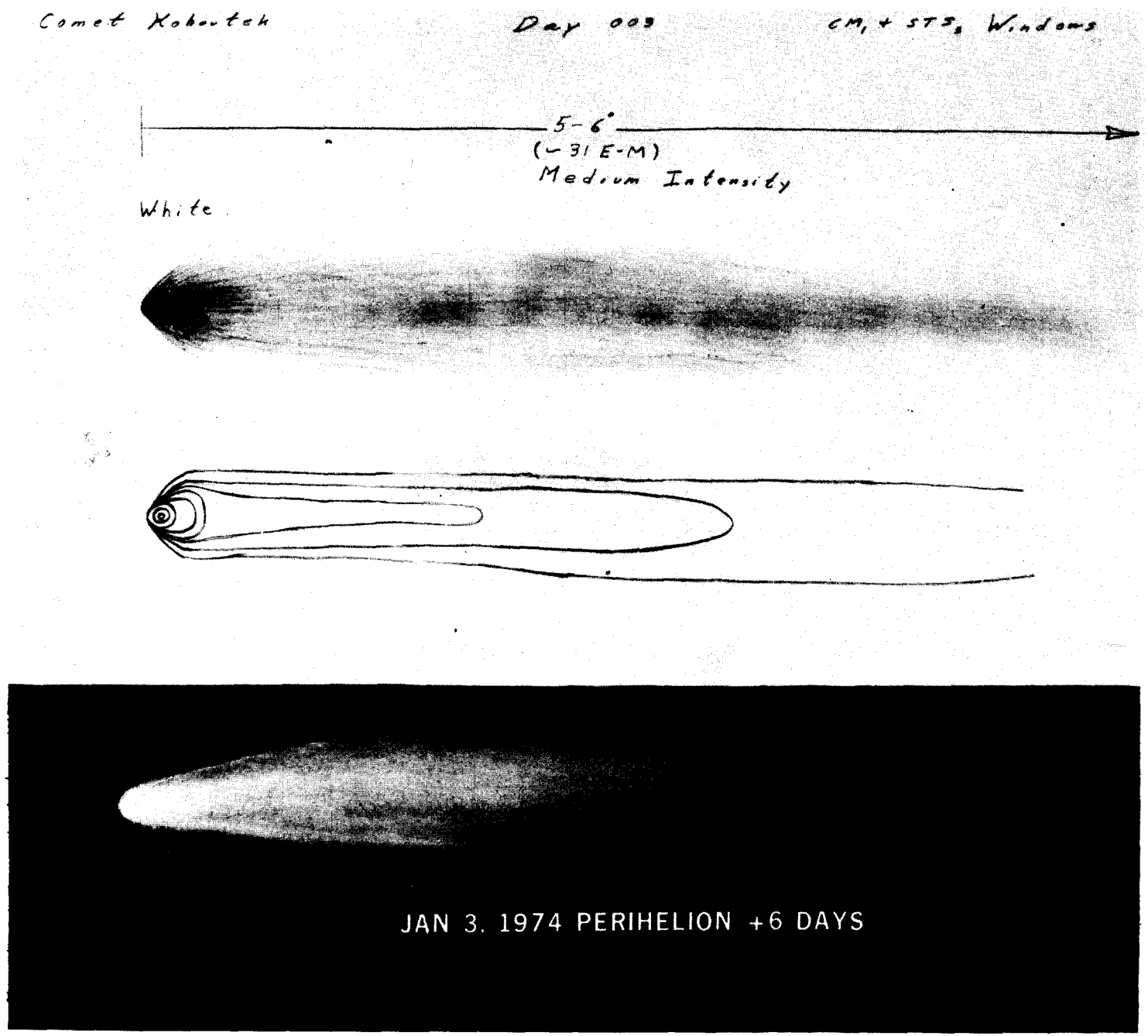

FIGURE A-7. COMET KOHOUTEK, JAN 3, 1974

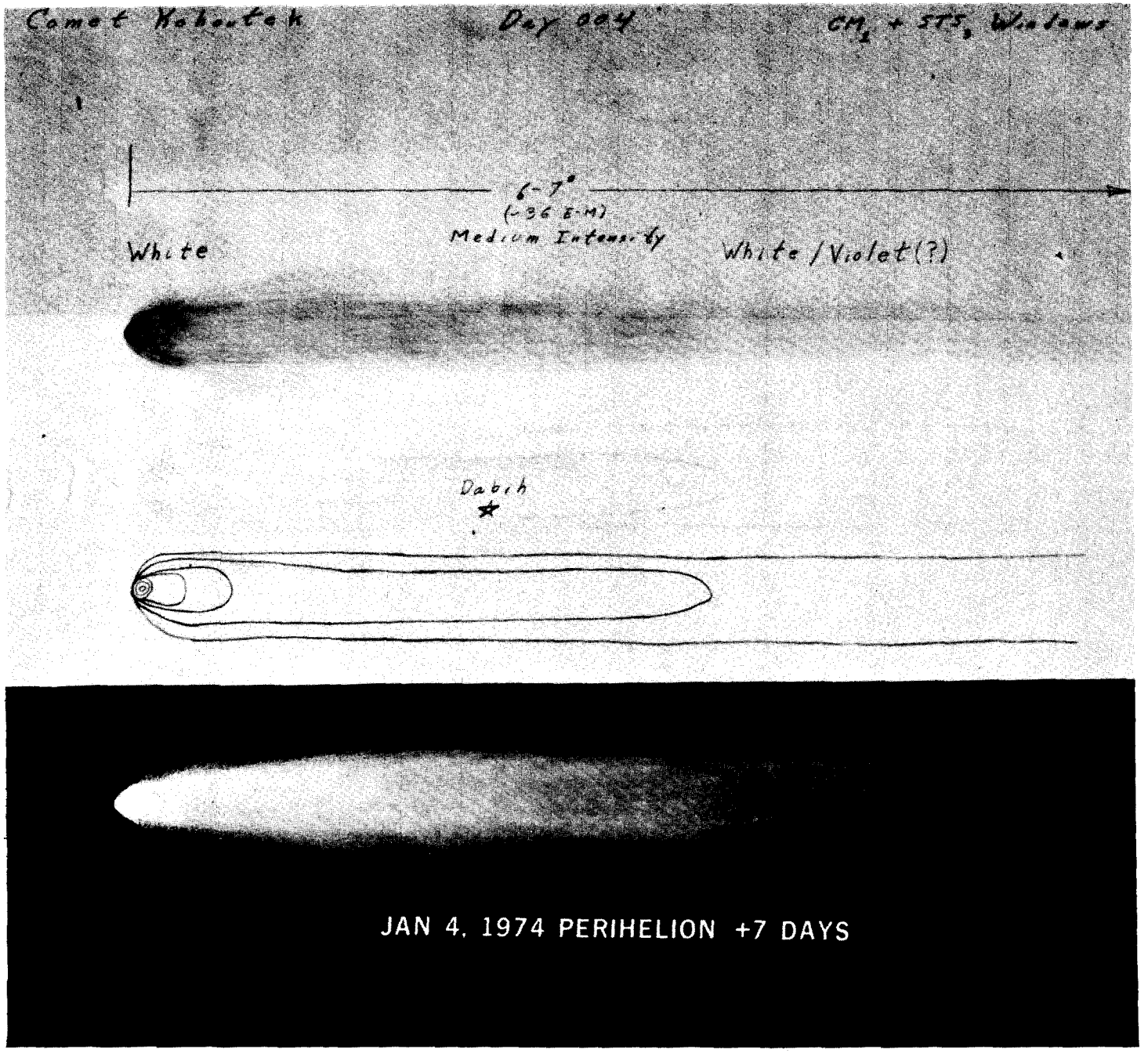

FIGURE A-8. COMET KOHOUTEK, JAN 4, 1974

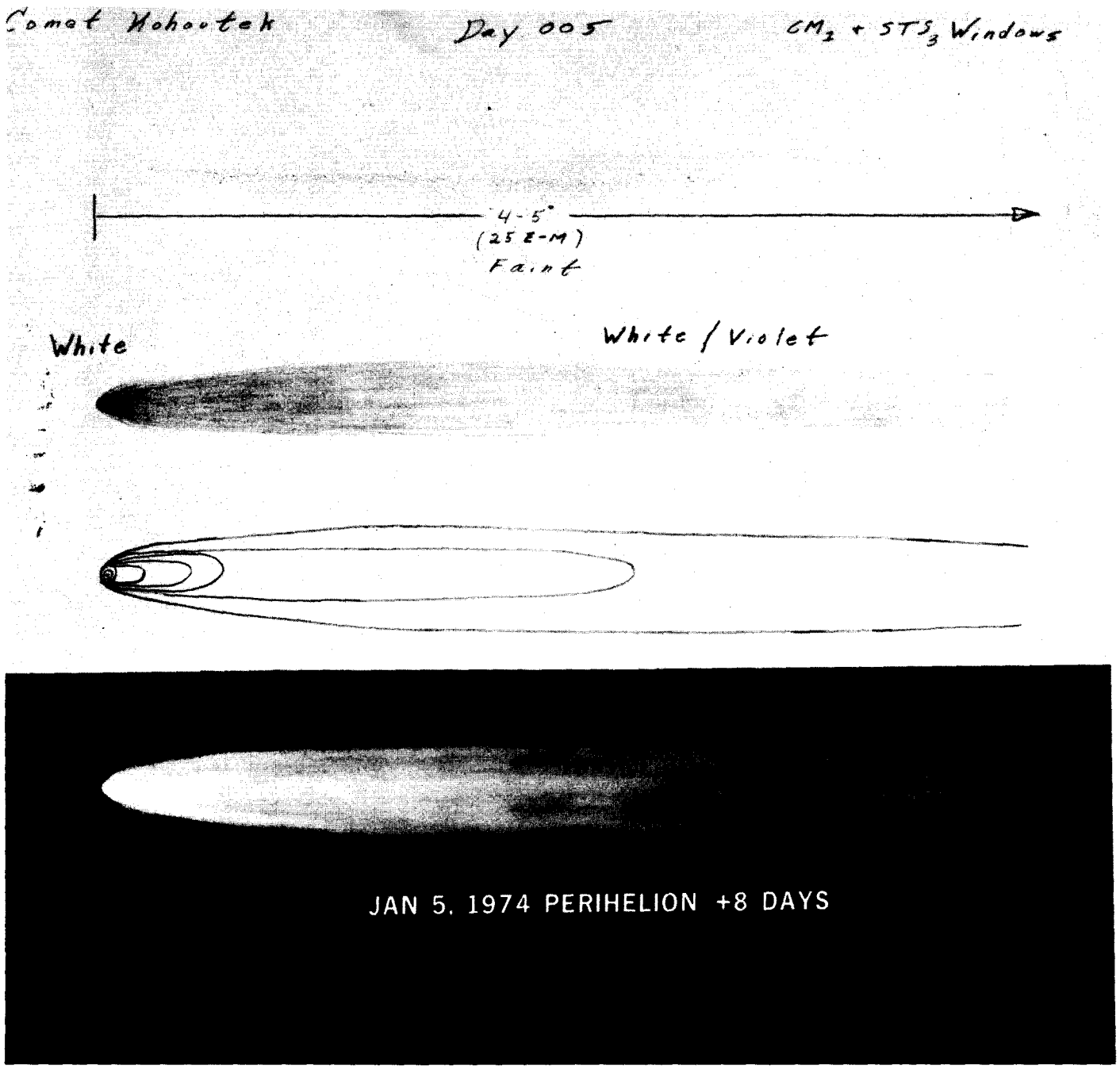

FIGURE A-9. COMET KOHOUTEK, JAN 5, 1974

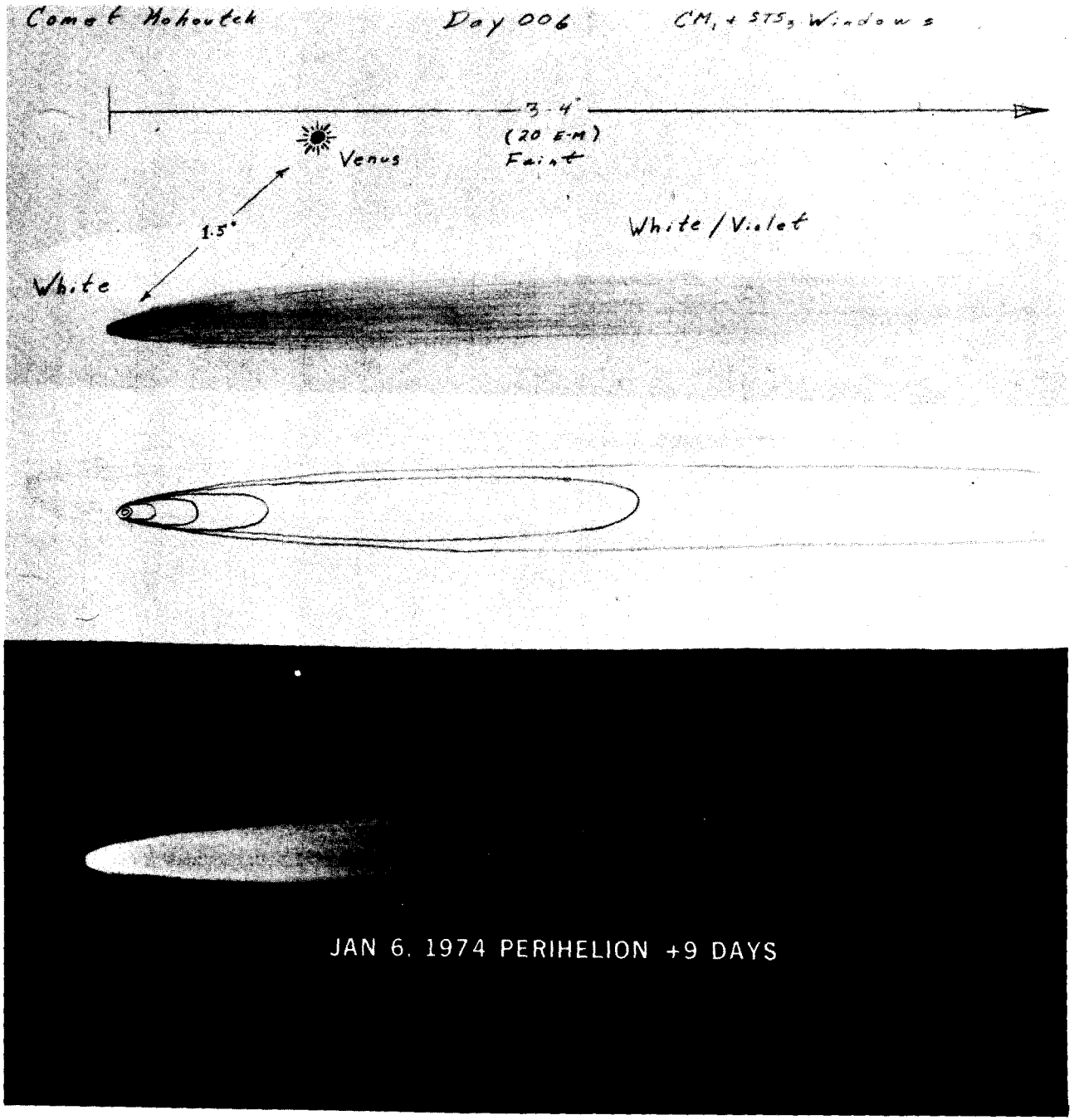

FIGURE A-10. COMET KOHOUTEK, JAN 6, 1974

SPT I think a 2 day interval now is a little bit close, I think maybe we ought to open it up to about a 4 day cycle, so, 4 days from now I might give you a little something, but there's really not too much changing other than the tail length and other very small features.

01/08/74, DOY 8, MD-54, 17:18 - GMT Tape #MC1871/1

CC Ed, this morning we ginned up a little message to give you some information about the comet. It turns out that several more ions and elements have been identified in some spectral analysis and I thought I'd read them up to you, if you'd like, and there's about five extra ones.

SPT Okay, go ahead.

CC In addition to the ones that were on the message that we sent the other day, the following have been identified: carbon-hydrogen ion, carbon dioxide, carbon monoxide, hydrogen cyanide, and Lyman-alpha. Incidentally, a matter of information - the methyl cyanide molecules have never previously been identified specifically in spectral analysis of a previous comet. The thought is that they probably were present but not detectable because of the equipment and since we've done so much looking at Kohoutek, we noticed them in this comet.

SPT Yes, that's interesting Dick. I wouldn't suspect to find those. I think the S082B data, when that comes back, will come up with a host of additional lines, and perhaps some more components. It's a very sensitive instrument.

01/10/74, DOY 10, MD-55, 01:50 - GMT Tape #MC1930/1

CDR The comet is still about 5 degrees long. It's really hanging in there. It's not as bright as it has been in the past; it's getting a little dimmer, but it's every bit as long and once you get dark adapted you can see it.

CDR Have you folks been able to see it on the ground yet?

CC Well, we've had a little problem with clouds around here lately. And times that we don't have the clouds I was going to sneak out tonight to see if I could look at it. We've had several people that have reported observing it from the ground.

CDR You getting it right after sunset, or about what time of the evening are they seeing it?

CC After 1 hour after sunset is about the best time to view it.

01/11/74, DOY 11, MD-57, 13:33 - GMT Dump Tape 11-03

PLT This is the pilot. Time is 13:33. Just finished the S233 photographs of the comet. The comet is very faint, but the length of the tail is shortened very little if any from our estimate, say 5 to 6 degrees in length, using the field of view of the binoculars as a rough gage. I noticed that it is still fills, a good 2/3 of the field across in the binoculars.

PLT And the tail becomes fainter and fainter, of course; finally lose sight of it. However, by sweeping the eye back and forth, you can pretty well make it out, at least as far as the impurity of the eye is concerned. So I'd still estimate the length a minimum of 5 degrees and perhaps 6, and it sort of depends on the individual eyeball looking. The coma is very faint now as far as the visual magnitude concerned, just after sunset. Had difficulty seeing it; had to get dark adapted before I could actually pick it up visually. So the magnitude or brightness is waning. I don't think it's due to distance, but, anyway, the length still remains the same.

01/14/74, DOY 14, MD-60, 20:48 - GMT Dump Tape #014-10

CDR Okay, stand by for 20:48 and initiation of exposure on Kohoutek.

CDR MARK.

CDR Okay. We got the exposure started on time, and I've already reported ROTATION AND TILT. They're nominal. This is the 540 second unwidened exposure. I'm looking out trying to see if I can see Kohoutek. Okay, I have Kohoutek in sight. It's on the vertical center line and it's half way out to the box. It's half way out. I can't quite read the vertical marks and I don't want to leave the reticle on too long for fear I'll lose it. I would say, from the center out to the box, it's about 40 to 45 percent of the distance out from the center.

CDR I'm going to reposition the comet to put in the left side of the field.

CDR All right, I've positioned the comet now so that it's at the intersection of the left vertical line with the horizontal line.

CDR Boy, the comet is really getting dim. I can't really see the comet by looking directly at it. I have to offset by line of sight just a little bit in order to begin to pick

up the tail. The coma itself is readily seen and it looks just like a star. I can't tell you the brightness magnitude of it. There's another star within about 2 degrees of it and that star is of a brighter magnitude.

CDR I would say that the comet is the same magnitude as would be with the Regor and Mirfak and some of those stars, when you're outside looking at them, flying an airplane or something like that.

02/01/74, DOY 32, MD-77, 01:08 - GMT Dump Tape #031-08

CDR This is the CDR at 01:08 Zulu, reporting handheld photography of Kohoutek, S233. I pointed the camera in accordance with instructions from the ground. That is, first normal to the window of the spacecraft, window number 4, and then tilted it back about 20 to 25 degrees toward the command module, and took the pictures. Don't know how much good they're going to be to you because the moon was up and casting a lot of light on the bottom side of the solar panels and on a strut which goes right by the window. I can't help but think that the photography is pretty much degraded by just a lot of scattered light from the moon. However, you have three 180-second exposures started on time. And I think I did see the comet with the binoculars. It's extremely faint. And that makes me even more inclined to think that you probably will not see it on the film because of all the light and the fact that the comet is indeed so faint.

APPENDIX B

COMET KOHOUTEK SCIENCE CONFERENCES WITH THE CREW

This appendix presents the science conferences held between the ground based comet scientists and the Skylab 4 crew.

APPENDIX B

COMET KOHOUTEK SCIENCE CONFERENCES WITH THE CREW

12/17/73, DOY 351, MD-32, 19:33 - GMT Tape #MC1030/2

CC Bill Snoddy, the NASA Project Scientist for Project Kohoutek, is ready to go with the Kohoutek briefing.

MCC Good afternoon, Gentlemen. Want to bring you up to date on the status of the comet as seen from the ground; and also, if we have time, comment a little bit on the observing program you are carrying out up there. First of all, we sent you up the visual magnitudes the other day. These are based on a wide scatter in visual observations. We did (garble) to them. And the (garble), you will notice, all slightly below the bottom curve ... that you got in your package up there.

Smithsonian says that these visual observations correspond to photographic magnitude pretty well in agreement with your bottom curve, and they are standing by their prediction of a maximum magnitude of around minus 4. The scatter in visual observations points out the importance of the S233 observations you are making. We hope they will have a good continuous record of the growth and brightness. Also, I might point out that both tails of the comet are there. You cannot see them because they both lie in a plane that is along your line of sight; and therefore, the white tail is masking the blue gas tail. With the filters you have on board, though, the sensors are picking up the different tails.

Also, I might point out that the comet is rapidly becoming unobservable from the ground. In fact, we just about lost it here. As you can probably guess, there continues to be "watch", for its scientific and public interest in the comet. This makes us all the more interested in any kind of observations you might make on it.

In addition to the tail-length information, and so forth, being given to us, which is great, you might also be on the lookout for any changes in noticeable structure that might exist; i.e., any variations in brightness. <u>There are some predictions that the nucleus will become increasingly bright relative to the Coma, and so you might be on the lookout for a bright spot in the Coma</u>.

MCC Also, be on the alert for any temporal changes in brightness or structure. It is always possible that the thing could split or flare become maybe a thousand times brighter in a matter of a day or two. If you were to detect any changes like this occurring we would probably want to try to change our observing program to get better data on that sort of thing.

12/17/73, DOY 351, MD-32, 19:33 - GMT Tape #MC1030/3

SPT Okay, Bill. We will try to do that.

MCC Okay, great! Also, I might mention that there has been some rather interesting observations made. For the first time our radio emission was detected from comets; and in fact, the molecule methyl cyanide was detected. This is a rather exotic molecule and is more indicative of the kind of stuff that exists in interstellar space. And this makes the whole operation that much more interesting. Also, OH was detected for the first time in any of our missions since 183, and that was (garble) you are looking for OH in the spatial and temporal distribution. We now know it is there and so we hope we are getting good data over the instruments there.

H-Alpha was also detected for the first time in a comet. We hope this means that there is a good Lyman-alpha emission which is needed, you know, for our JOP 18 pointing. Let me wind up by saying that we appreciate the good work you have been doing with our synoptic observations.

You know, I believe that you all did some measurements in white light as we passed the orbital plane on about mission day 24. Ground-based stations are pretty well wiped out by full moon plus the twilight. We are hoping that your observations will show up some debris in the plane. The occultation you did on Pi Scorpio, last night, was the first time such an occultation has been done in UV, and it was the only chance we have on Skylab, so we are real glad that it went off okay.

We are going to be starting our JOP 18's on mission day 34. This day was particularly picked because Antares will also be in the field of view and this will give us a chance to do some photo checks on our pointing procedures. Messages will be sent up to you tonight discussing exactly what we do want to do, and Bill Lenoir will be talking with you about this some more tomorrow. Are there any questions you have on the comet?

SPT Bill, you mentioned one particular molecule before OH. What was the first one you mentioned?

MCC "Methyl Cyanide". CH3CN is the formula for it, and it is the first time, I guess you might say, that a parent molecule has been observed; and it is more exotic than a lot of people had thought you would find in a comet. So this is a very interesting development.

SPT Any speculation, then, on the source of Kohoutek?

12/17/73, DOY 351, MD-32, 19:33 - GMT Tape #MC1030/4

MCC It is still rather early, but it makes it look like perhaps the thing was formed further out in the solar system than some theories would have it; perhaps on the outer fringes, instead of having been formed in the inner part of the solar system, and somehow moved out into that area. This would appear to me to indicate that the comet was perhaps formed out there.

SPT Okay. Thank you.

CDR Bill, you may have heard me say a little earlier, today, that it does not look like we have many more days of observation of Kohoutek left, out of the STS window No. 3. We have a solar panel that is beginning to move into occultation.

MCC There is a possibility that the orbital path of the comet is going to perhaps bring its trajectory to that point and then back out; back into the view again. So it may not continue in the direction that it is going. But we appreciate your inputs as it develops.

CDR Okay. I hope you are right.

MCC We've got our fingers crossed.

PLT Bill, a question on T025 equipment: you know that we had problems on the first EVA. Do we plan to use that on the EVA next week? If so, I need some maintenance suggestions on how to make that exposure setting knob; how to fix that thing so it will work outside.

MCC Yes, we are working on that. We do expect to use that; and you can believe it is being worked very thoroughly, down here. It looks like there should be no problem.

PLT Thank you.

CC Skylab, we got you through Ascension here for 8 minutes; and here is Bill Snoddy on Kohoutek.

MCC Good morning, Fellows! Want to try to bring you guys up to date on things in terms of the comet, and in terms of the observing program; some of the philosophy we have, there.

First of all, I just might say that all the comet PI's are just simply delighted with the way the operation has been going! As far as the status of the comet is concerned, you are the only people getting much data right now, so I cannot really report to you very much in terms of new information, since you are the only guys getting it .. almost. As you know, the comet is in a dynamic period as it approaches perihelion. The tail should be fanning out. As a matter of fact, Jerry, I believe the day before yesterday you reported that you were observing this. During the next several days the tail will be trying to, in effect, move around in front of the comet. This will take quite a few days, in fact, for this to occur. The tail actually more or less reforms, so that it is in front of the comet. The gas tail does this much faster than the dust tail does. In the photographs that you take, we may see the blue gas tail out in front of the comet and the dust tail still lagging behind it. As a matter of fact, there is a period of time around the first of January when the dust tail will probably be both in front of, and still, from our point of view, appear to be behind the comet as well; so this is a rather dynamic period. As we go through perihelion, then, we will, of course, be in the period where we have the maximum excitation of the molecules and the free atoms. Metal lines have only been observed in two other comets, and never in the UV. If they should show up at this time we are quite anxious and hopeful that on 82B, 55, and so on, we will get some of these metal lines; especially 82B.

And this is also the time when the comet might split, if it is going to; and this will be quite interesting because this will expose the interior surfaces of the comet and we would like to see what kind of spectrographic data we get there, so we are hoping to get data at regular intervals. If the comet does split we will have that data automatically. I am not sure how quickly we would know from the time it split until it would be observed; so if we take data every day that we can, and then if this does occur we hopefully will

MCC have that data. There is a meeting up at Smithsonian, this morning. Professor Kohoutek will be there. They are going to be meeting with some of the scientists who look at the data that has been gathered, so far, and they are going to let us know the outcome of that. In fact, Professor Kohoutek will be here the day after tomorrow and he will be able to bring us up to date on the speculation and things that are occurring; and we, naturally, will pass on to you any interesting developments that we get.

I am afraid you will not be able to see the comet out of any of your windows because of obstructions and so forth until around January 8; but you will get a good view at that time because the comet will be quite near Venus and Jupiter. As a publication of one of the highly-concerned groups about this comet coming, the comet will be seen to consort brazenly in the darkness with Venus and Jupiter, so you will have a good view of that. On ATM, this is their prime period of operations. Tomorrow evening the comet comes into the field of view of S052, and while it is in a Sun-center position, and so they will start operating unattended tomorrow evening and operate continually for 24 orbits, as first the nucleus passes through the field of view and then as the tail comes through; they will be looking at the dynamics between the Sun and the comet, especially the interactions with the tail. On the morning of mission day 42 it will be at a period of a minimum elongation when the comet will be within the field of view of 82A, which will be observing it in the -- far UV, and looking for things such as helium; so that will be a very important period. That is the only time 82A will be able to get data on the comet. Also, 82B and 55 will be observing not the nucleus but the Coma, at that time.

After you have gone to bed tomorrow evening we will pass through the perihelion. That would be about 10:30 GMT, where the comet, of course, will be given a good thermal kick and we will be wanting to see the results of that kick during the EVA on mission day 44, with T025 and 201 to compare results with the results that we got yesterday. By the way, the PI's are just delighted with the way things seem to have gone.

If later in the day time allows, we hope that perhaps we can schedule an observation with 82B and S055, to try to catch the comet as near perihelion as possible. Since perihelion occurs after the minimum elongation, our chances of looking at the comet near perihelion are better after perihelion

MCC than they were before perihelion.

The corollary airlock instruments will start observing, again, around the first of January and it will be a different mode of operation now that the comet is on the other side, so we will have the situation where the Sun sets first, and then the nucleus, and then the tail. This will make things not quite as hectic. You will not always be worrying about the Sun coming up and messing up the last exposure. We will have the Sun out of the way before you start looking at the comet, and then we will also get a good fix on the tail; and we expect to start trying to make some of our observations on the tail. We have not really been doing that, too much, up until now, but we will be making observations after the head of the comet sets. Interest in the comet is still quite high; in fact, you can even get a Kohoutek T-shirt, if you want to.

Smithsonian reported this morning that the most popular question they get from the public in their discussions in connection with the comet is, "What are the astronauts doing?"; so you fellows are certainly in a central role, here. I will give you guys a chance to talk.

SPT Thanks, Bill, for the update. I tried to look for it this morning but I could not see it and I was wondering whether it had moved behind the solar panel or not. Or, whether it is just because of the light scattering that we just can not dark-adapt enough in order to see it. If it has moved behind the panel, I am wondering whether and time we make a maneuver you can tell us at what point during that maneuver we might have a change to see. We'd certainly like to make some visual observations and give you some real-time information, if at all possible.

Secondly, as far as using the ATM, we would like to make sure that we do not miss any opportunities up here, in order to get that done. So, you just tell us what time certain observations are best performed and let us try and work out what can be done.

MCC We really appreciate that attitude. I'm afraid that it is behind the panel, now, and that is the reason that I do not believe you will have a really good view of it until around January 8 or so, but we are reworking that right now to see if there is any possibility at any time that we can get a good view of it, and if we can come up with anything during any of the maneuvers, or anything of that sort we will certainly pass it on to you.

SPT Okay, and apparently we are going to be hearing more about which type of JOP's 18 Alfa, Bravo, Charlie, or so forth, we are going to be doing over the next few days. It would be interesting to get a summary of that and start thinking a little bit ahead.

MCC We will sure do that. Bill Lenoir will be talking about these things to you, daily, as well, but we will get that to you.

12/28/73, DOY 362, MD-43, 21:07 - GMT Tape #MC1452/1

CDR Good afternoon, Dr. Kohoutek.

DR. KOHOUTEK Good afternoon. I am very glad to have an opportunity to follow the comet 1973f's viewing. It is a most critical day during its perihelion passage, and from the place where most research of that comet is concentrated. Especially, it is a great pleasure for me to greet you, Mr. Gibson, Mr. Carr, and Mr. Pogue, as the first human beings studying a comet from outer space. Your mission is indeed very important for astronomy. I have the following questions:

You observed the comet visually, last Sunday and Monday; you compared it in brightness with Mercury and suggested that there were colored features in the Coma. Do you have anything more to say on those observations?

CDR Not too much to add to that, Sir, because we have not seen much of the comet visually since those last observations; the one time in which I was the one who observed the color. I have not seen the comet since. The next time I saw the comet was on the S052 white light coronagraph.

DR. KOHOUTEK Oh, yes; and how about a tail, for example?

CDR The tail, we have found, as it comes more foreshortened to us, became much wider; and let me give you the figures that are relative to the display we have on the ATM. I would say that the Coma (i.e., the bright Coma) was approximately 1/8 to 3/16 of an inch in diameter. I would say that the tail that we could see, however, foreshortened, extended only about 1/4 inch away from the Coma and spread like a fan to approximately 3/8 of an inch at its outermost end.

DR. KOHOUTEK Have you glimpsed the comet since Monday; I mean, visually?

CDR No, Sir, we have not.

DR. KOHOUTEK I saw a transmitted picture of the comet which you got with the coronagraph yesterday. There is a sudden indication of the tail on the copies available, down here. I wonder how much of the tail you were able to see up there?

CDR Dr. Gibson made that observation and took a polaroid picture that we have up here with us; and I'll let him speak, to that.

SPT Dr. Kohoutek, it looked to us that the tail fanned out, as Jerry said, and it was about 20 degrees as far as the fan from the axis. And we were able to see it back to a distance of around 3 times the size of the Coma. After that it was lost in the noise of the white light display.

DR. KOHOUTEK How is the brightness changing from day to day? You are the only people who see this comet, at present, and therefore your information is very valuable.

SPT Well, unfortunately we are not able to see it by eye; we can only tell by what we see on the white light coronograph display. That display has indicated that the brightness certainly is increasing. The display itself has a filtering function which allows you to see the corona much better so that it is a factor of a hundred from edge of occulting disk all the way out to the edge of the display. So we were only able to see it at the very beginning very close to the edge of the display. Now we can see it fairly close to the occulting disk, so I am sure we are at least up a factor of 10 from that when we first saw it, and perhaps greater than that.

DR. KOHOUTEK Yes, calculations suggest that the comet may have a sort of sun-ward spike around the New Year day. Could you watch for this phenomenon?

SPT We certainly will. We will be watching for the sun-ward spike and also for two tails, and for perhaps a break. If that happens we will be looking for it. Why don't I hand it over to Bill Pogue and let him discuss the brightness also.

PLT We first started making visual observations of the comet the first week in December. It was not visible up until that time. We were able to find it manually by using first binoculars in order to get the location proper, because the observation manually by eyeball is somewhat awkward because of the windows we have to use and the angles at which we have to look. We also not only have awkward angles inside the spacecraft looking out, but we also have intervening

PLT structures; large solar panels. And although it may sound like we are hedging some part of your question, we are giving you honest answers because sometimes it is just hard to see it; and we do have problems and intervening structure. This is going to also compromise our ability to see some of the more potentially dramatic events that are going to occur in the next few days, as it is still behind some of this intervening structure. About the first week in December we picked it up visually, and it became brighter and brighter. I was able to see it visually and point it out to the other crewmen. And we started monitoring it objectively from day to day. And then it did not seem to change for about ten days; and then there was a very dramatic increase in the brightening; and it was appearing to grow quite dramatically the last few days that we were watching it. I estimated the length of the tail one day 2 degrees; and about a day and a half later Dr. Gibson estimated it about 4 degrees; so it was growing very rapidly, and then of course we lost it behind the structure. We will be making every effort to reacquire it visually; and of course as soon as we are able to see it we will resume photographic data taking.

SPT Dr. Kohoutek, we have a question we would like to ask you. First, let us say that we are very appreciative of your coming down and talking with us. And I think everybody interested in the comet is very appreciative of your early discovery of the comet, so that we could marshal our forces, which we are putting to bear on the problem, and get very organized and go about it in a very systematic way. I think we will learn an awful lot, now, because we were able to pick it up so early. I have a couple of questions, and they are: "What have you seen in it so far as in terms of chemical composition; and what would that indicate to you as far as its origin?", and "What is its eccentricity and how does that reflect on its origin?"

CC The answer will be coming right up to you, Ed.

SPT We thought we had gone LOS, Story.

DR. KOHOUTEK Yes, it is very probably a new comet, and the exact determination of the orbit is very important. Because, if it is a new comet, it could release some information, not only about comets, but about the origin of the solar system, and it is very important.

DR KOHOUTEK Back to your question about the composition. Of course, all observations about composition are very valuable, but especially observations made during perihelion passage are very important. Because, as I said already, you are the only people who can see the comet, now.

SPT When you were able to see it, and you were looking at some of the visible emission, were you able to detect any molecules?

DR KOHOUTEK One question: Ground-based observation of the H-alpha emission was reported some time ago. Have you ever detected the comet's H-alpha emission?

SPT No, we have not. We have certainly tried to see it. We have looked for it with both H-alpha displays, which, of course, is geared for a much higher solar emission. And we have also looked for it with our extreme ultra-violet monitor. And we have not been able to detect it so far at its brightest point. That is what we are working on, this afternoon; and we may be able to see it.

DR KOHOUTEK Yes, thank you very much for a most interesting talk. Let me congratulate you upon accomplishment you have achieved so far, and wish you the best of success in your further observations and flawless splash-down in February. Thank you very much.

CDR Dr. Kohoutek, on behalf of the Skylab III Crew, I would like to tell you that we are honored to have this opportunity to speak to you, Sir. And we will do our best to get the best that we possibly can. Good day, Sir.

<u>01/02/74, DOY 2, MD-48, 21:09 - GMT</u> Tape #MC1657/1

MCC Let me turn it over to Bill Snoddy, now, on Kohoutek.

MCC Good afternoon. How are you? I want, in the few minutes we have, to let you guys know a little bit about what is going on regarding the comet, down here; and a little bit about how the observing program fits into things.

Other than methyl cyanide, which I told you about earlier, this is the only other molecule they have detected in emission; and, as a matter of fact, there is a little bit of mystery as to why they have not detected other molecules; and why these particular ones; especially the methyl cyanide.

MCC Also, Dr. Meisel, at Stoneybrook, just completed an analysis where he has been looking at a lot of the so-called "new comets", in the complicated procedure where he looks at the way they brighten up as they get nearer the Sun. On the basis of his model and his analysis, he has concluded that Kohoutek is the newest of the new (he calls it), which I guess means that it could be that it is made out of material that has been least disturbed by the Sun; perhaps, purest. This, I thought, was an interesting observation I learned about this morning, and thought I would pass that on to you, as well.

SPT That certainly is! Thank you.

MCC Also, Smithsonian reported that they have not been notified of any success at any of the ground-based solar observatories, to get data during the perihelion time. I think there was cloud cover, and perhaps there was a sensitivity problem, too. I don't know. So, they pointed out that this makes your data all the more valuable and unique. And they are very pleased that we have it. Apparently, we would have been wiped out, otherwise. We'd like to pass on to you the fact that S055 is getting real good Lyman-alpha data when the S052 is observing the nucleus; so this indicates, I guess, a fairly sizeable and intense Lyman-alpha cloud. This gives the S082B people qu te a bit of encouragement that they are getting good data. And, of course, the S052 guys are very pleased with the way the perihelion operation ran and are most anxious to see their data. I want to also remind you that Smithsonian asked me to point out that you know there is a time delay, sometimes, with these perihelion affects on comets, and so we could still expect to see some flares or things of this sort when they occur. In fact, flares can occur at any time, I suppose; so you guys have a chance to see the comet quite often, and if you do see any of these things please let us know. We might want to change our own program and we would also especially like to alert the ground-based guys that something seems to be happening.

There is a series of rockets scheduled to be launched January 4 to January 11; there are four rockets. We are trying to set up our observing program to complement theirs. Also, the rocket people were quite interested in knowing the brightness of the comet from the standpoint of being able to track on it real well. And so any information you can give on the brightness is also appreciated; like

MCC comparing it with Jupiter, for example. On this brightness point let me mention one other real quick thing; the nuclear condensation, which is the thing that you probably are seeing on S052 monitor, which I understand you say the signal was fairly weak yesterday, could be being masked by the coma being more intense. The overall brightness of it might be up, so any observation you can make about the overall brightness would be appreciated. I guess I better turn it over.

SPT The brightness by eye does not appear to have dropped as much as I had seen it decrease on the WLC, but still that is a very subjective thing; and they may have different gains. It is a very hard judgement to make.

MCC Okay, thanks. By the way, you mentioned yesterday that you had a sketch. We are very anxious to receive that. There is a lot of science in those sketches. If you can get it down to us we would appreciate it very much.

SPT Okay, I sure would like to do that some time today. Right now I am working on building-block changes. And I will try to get to it.

01/18/74, DOY 18, MD-64, 17:40 - GMT

Tape #MC2246/4
&
Tape #MC2247/1, -2

CC We will turn it over here to Stan Fields of the Marshall Space Flight Center, for the comet.

CDR Okay. Hello, Stan.

MCC Hello. I would like to take the next few minutes to discuss the comet with you. First of all, I want to tell you how we appreciate the sketches you prepared, and also the descriptions you gave. These have been very valuable to us; and Maurice Dubin points out that your sketches and descriptions may make it possible to form the basis of one of the best scientific publications to come out of our entire observational program. Also, I would like to point out that we believe that on mission day 50, when you saw the violet color in the white tail, you were probably seeing the gas tail. Ed, we agree with you that JOP 18 has been very successful, and the ATM observations around perihelion, plus your sketches and descriptions, are going to be very valuable.

SPT Stan, it really does not say we were looking at the gas tail because it appeared to be pretty much coinciding with the dust tail; up to that point we could still see the dust tail and I expected to see them diverge.

MCC Okay, we thought from the color description that there was some possibility. Now then, I would like to tell you a little bit about what is going on down here. First of all, I would like to report to tell you the detection of a new molecule, since the last time we talked with you; that is, hydrogen cyanide. Also, during the last conference we told you somewhat prematurely about the detection of water from the comet for the first time. This, however, has now been confirmed by other groups. Also, just this morning the Smithsonian Astrophysical Observatory reports the observance of CH in radio emission. The importance of this is that it is the first observance of a molecule in radio emission that has also been observed in emission in the visible regions. There have been a couple of rocket launches since their last conference. The John Hopkins University, on January 5, obtained a spectrum in the UV and identified the Lyman-alpha and atomic oxygen. Surface brightness was estimated at 80 kilo rayleigh in Lyman-Alpha and 4.5 in OH. This observance occurred near the time that you were performing an S019 operation. NRL rocket on January 8, with three Carruthers cameras on board observed the cloud in Lyman-alpha which was nearly spherical in a central region out to about 1/9th degree; then the intensity dropped rapidly with a cloud distorted in the antisolar direction. In this period you made several S201 observations which should prove very interesting in following the development of the cloud. The image in the 1230 to 2000 angstrom range had a 5 arc minute diameter and integrated brightness about the same as the star Eta Capricorn. The spectrum showed atomic oxygen at 1304 angstroms and atomic carbon at 1657 angstroms. The carbon emission was about four times stronger then the oxygen.

On some photographic results the University of Minnesota reports IR observations with an antitail observed through January 4. The coma and regular tail showed the silicate structure identified in Comet Bennett, whereas the antitail showed irregular black body spectrum cooler than the coma and consistent with the presence of larger particles. The joint observatory commentary research at South Baldy, a mountain in New Mexico, has been photographing the comet daily. The latest report, on January 15, gave a gas tail measured as 25 degrees long with a distinct curvature at

MCC the end, and a dust tail 10 degrees long. Also, an antitail 1/2 degree long. The visual observations these days are estimating tail lengths approximately 6 degrees.

SPT The antitail; which exact direction was that? Was that still solar, or what was the orientation?

MCC Yes, that would be solar.

SPT So that would correlate with what we were able to see visually for the first 3 or 4 days after perihelion.

MCC Yes, that seems to agree. Also, the comet magnitude is not as bright as we had hoped it would be at the time. As you remember, prior to perihelion we had given you some visual "ops" to compare with the curve you have on board, and those magnitudes were running 1 to 2 magnitudes below the Arend-Roland curve. The post perihelion visual ops at this time seem to show the comet being 3 to 4 magnitudes below the Arend-Roland curve. Incidentally, we did observe the comet here at Houston for the past three nights, and this has been the first time we have been able to see it since perihelion. From the astronomer's point of view there is no reason for disappointment in this low visual magnitude of Kohoutek. In fact, we are waiting for the opportunity to correlate the data gathered on the ground with the Skylab observations. There are a number of theories as to why the magnitude of Kohoutek has not lived up to its advance billing. Some astronomers theorize that Comet Kohoutek is a new comet not previously affected by solar radiation and that the head of the comet is covered by a low vapor-layered crust that in some way inhibits the brilliance that could otherwise be expected. Others believe it is possible that Comet Kohoutek consists of a highly volatile gas that vaporized soon after the comet was discovered, leading to a prediction of a higher brilliance than finally occurred. Additional theory holds that as Kohoutek approached perihelion the Sun quieted down considerably, thus producing less effect on the comet. However, you know that comets are very unpredictable. And in wrapping up, here, I would like to say that starting about mission day 71 we do plan some more comet observations with the corollary experiments.

SPT Thank you very much. Excellent rundown, Stan; appreciate it.

<u>01/26/74, DOY 26, MD-72, 16:02 - GMT</u> Tape #MC2529/1

CC Here is Bill Snoody.

MCC Good morning, Gentlemen.

SPT Good morning; how are you this morning?

MCC Oh, fine. I think it might be appropriate that I mention that this part of the science conference is offered to you for the sponsorship of your friendly Edsel dealers! You'd be surprised how much the people are disappointed over the brightness of the comet, including us, of course. It got so bad, for example, that I quit wearing my Kohoutek T-shirt, except when I take a shower. But at least, anyway, the science part of it is going real well; and let me bring you up to date on that.

We got a pretty good elongation angle, now; around 60 degrees, which allows our good ground-based observations. Can get long exposures at high zenith angles. Give you some examples: From the Joint Observatory Research Center at South Baldy, they are reporting some good measurements on the gas and dust tail on January 15. I think we told you last time they measured a gas tail 25 degrees long and a dust tail 10 degrees long. These two tails were right together. However, in the photographs, the left side of the tail appears straight, and this is primarily the gas tail. And the right side is curved, and this is the dust tail. You might recall seeing that same observation. They also see anti-tail; the one that you were the first to report at perihelion. This is the larger particles that are following the nucleus. On the 20th, the gas tail had decreased from 25 degrees down to 10 degrees, and the dust tail, 6 degrees. The anti-tail still being visible and then last night the gas tail was still 7 degrees and the dust tail was also 7 degrees, with an anti-tail being about a quarter of a degree. We are getting into some really interesting space observations, now. The elongation angle has gotten great enough that the Copernicus is scheduled to begin their observations. That is an OAO-III on January 29. They will do an extensive series of measurements with higher resolution spectrographs. They will be doing primarily around the Lyman-alpha region and also around the OH region. We are interested in getting these additional corollary measurements right now to give us an overlap with the Copernicus data and with Mariner X data. You know, the S201 measures the Lyman-alpha, and that's what both Copernicus and Mariner are getting data on; and S063 and S183 measures the OH, and that's what the Copernicus also will be getting data on.

MCC I thought I'd mention that Jesse, Greenstein, on January 13 and 14, for the series of measurements at the 200-inch at Mount Palomar, reported measuring more than 200 lines previously unseen in the mission. These were all normal wavelengths greater than some - hundred angstroms. And also, he reported that for the first time he had made a series of measurements prior to perihelion on four separate occasions. He did imagery at 10 emission wavelengths. So it would be interesting to compare his results with the stuff you guys have been getting. Lonnie Lane from Headquarters, and also from JPL, is out at Mauna Kea this week at the 88-inch telescope out there, making measurements down in the near-UV, getting down, hopefully, almost to OH and using image orthicon on the spectrograph; that is a two-day focus. One of the most interesting results that we have is Mariner X. This is the Mariner that was launched after you fellows were; one that is going to Venus and Mercury. The comet came into its field of view on January 17 and they began a series of observations in the UV wavelengths. In Lyman-alpha, for example, they were able to get good data out to 4 degrees in the solar direction away from the nucleus and up to 12 degrees in the anti-solar direction. So that Lyman-alpha cloud is indeed quite extensive. They also measured emissions at other wavelengths going all the way down, possibly to as low as 430 angstroms.

They also are getting TV images of the comet and sending them down, and these images, together with the images that we are getting, here from the ground, will give us a three-dimensional look at the way this thing really appears; and that should be quite interesting. The other thing I wanted to mention is Copernicus; the OAO-III will start their observations on January 29, mission day 75. They will be doing some really high-resolution spectrograms and they will be doing a series of observations on each day they observe. They will be looking at the nucleus each day they observe. They will be looking at the nucleus and then ahead of it, behind it, and back in the tail, and so forth; be looking at the Lyman-alpha wavelengths at S201 and the OH wavelengths, also, which tie in with S063 and S183. I guess the only thing I might mention is that we have tried to make first-cut illustrations based on your sketches and your comments that you sent down and we will be interested to let you look at them when you get back and see if we can work on them again and try to get it as accurate as possible.

SPT (Garble) if you do get another shot at it appreciate - what the people are learning. In other words (garble) together, and (garble) conclusion (garble).

MCC Okay. I'm having trouble reading you, there. Say, in closing, one other curious item as to what was wrong with the comet. This was put out by Art Buchwald. He claims he checked and found out that it was actually recalled by the manufacturer for repair. Seems like it had a faulty tail and a bad paint job, he said. That's probably about as good as I've heard, so far. So as you can see with these Copernicus and Mariner things beginning now, we are anxious to get these last corollary measurements in so we have this overlap with them, and so we have a continuous history from the time you fellows went up. Copernicus, I believe, will continue for quite a while longer, so I think scientifically we are doing great. Sure appreciate all your help.

SPT Okay, Bill. Thank you very much for the information. And I'm sure glad we got the real good wrap-up from Dr. Buchwald; that really clears things up!

APPENDIX C

ASTRONAUT'S DESCRIPTION OF COMET VIEWING EXPERIMENTS

This appendix included the astronaut's commentary, which was put on the Video Tape Recorder, of the comet viewing experiments. The first section was somewhat repeated due to an on-board equipment problem. The transcripts were slightly edited, for clarity. The original transcripts have been identified with the appropriate Mission Control numbers, if the reader should require any further detail.

APPENDIX C

ASTRONAUT'S DESCRIPTION OF COMET VIEWING EXPERIMENTS

12/31/73, DOY 365, MD-46, 18:25: - GMT Dump Tape 365-07

SPT SPT at 18:25. And this is some of the TV which can be fitted into TV-77 if you will shift this portion into the part that I'm about to record later on; this will show the pointing of the comet. We're now looking at the display for the WHITE LIGHT CORONAGRAPH. And down in the lower left is a very faint object which turns out to be the comet. The coronagraph was designed to look at sun and the corona which is fairly bright. And the comet being relatively faint just barely shows but, it's still well enough to do the pointing. What I will do now, is to make a few entries into the computer which will move that very small bright point to another position for our observations.

Okay, the entries are now made and I can see it pulling off to a new location. Now you see it disappear. The reason for that is as it gets in closer to the center of the display the filtering on the instrument tends to filter out the light much more greatly as you move in closer to the center. The corona, that's the region around the sun is very bright towards the inside and very faint towards the outside, so this instrument just takes and transmits light just opposite to that. That is, it lets the light far out pass through very easily and filters out that close to the sun. When you get an object which is uniform, which is of the same brightness, as you move it around, it tends to become fainter as you move it in. And that's one of the difficulties we have in working with this. Okay, we've now got the comet in the position for viewing, and we'll start the observing program.

TIME SKIP

I'd like to show you a little bit about how we are observing Comet Kohoutek. The panel that we have right in front of me here is the Apollo Telescope Mount Control and Display Panel. We're using the instruments which are controlled through this panel for observing the comet. These instruments were originally designed for studying of the Sun and we still do use it essentially for that purpose. But we've also found that some of these instruments are quite capable of learning quite a bit about the comet. And I'll try and discuss a little of that for you today. I think we've been rather fortunate that Comet Kohoutek was discovered quite

early so that we could get a good observing program put together to study it. Another exceptional thing about the comet is that it's coming relatively close to the Sun, or it has been already, and therefore is heated; it has become quite bright. And we hope in this way to show quite a bit how comets are made and how they change. It's just gone through a relatively dynamic period. On December 28, it came within a quarter of a million miles of the Sun, which is really quite close. And it was traveling at a speed of about a quarter million miles an hour. Now it will tend to slow down as it moves away from the Sun, and also tend to decrease in brightness.

SPT However, as it does get a little further away from the Sun, you folks down there will be able to see it and be able to enjoy the same spectacular sight that we have been up here. We've been quite lucky. We have 15 divisions into nights and days up here for every 24 hours; so we're able to see it quite frequently. An advantage for us in being up here is that we're above the Earth's atmosphere. That allows us to see it without any of the intense light scattering that exists within the Earth's atmosphere. And as soon as it comes above the horizon, we can see it and observe it. We've used quite a few of these onboard instruments to do that. And first, let's talk about the ATM. In general, what we try to do is to take a picture of the comet, same as you would take a picture with just any camera you would have at home. We also at the same time try to learn a little bit about what colors that the comet really emits. By colors, we mean not just the ones you can see with your eyes, but those all the way down into X-rays. We don't expect X-rays but we do expect some ultraviolet emissions. Surprisingly enough, there is very little real hard data on comets even though they've been noted since almost 500 B.C. We hope we can make a significant step in that direction along with some of the other observing programs which are being carried out at this time.

SPT We'd like to know whether it's made of ice, rock; whether there's methane in it, complicated molecules; whether it's hydrogen; numerous questions which will tell us a little bit about where it came from and what happened; how the solar system was put together. We've been able to do a fairly extensive observing program despite the fact that we have lost one control moment gyro for maneuvering. We started out with three and have lost one, which we thought was a significant impact, but fortunately the people at Houston have gotten very smart, worked hard, and figured out some fairly good ways of getting the job done with the reduced capability. The first instrument and perhaps the

primary one for the purposes of finding the comet and pointing to it is the WHITE LIGHT CORONAGRAPH. That's controlled through this section of the panel here, and we use these two TV monitors to find the comet by using the instrument in conjunction with a TV camera that it has mounted into it which gives us picture of what the the instrument sees. Since the corona, the atmosphere around the Sun, is relatively faint and the comet is also, the instruments are pretty well matched. However, as you go in toward the center of the Sun the corona gets very bright. The coronagraph here has taken that into account and filtered out most of the light very close to the Sun so that only the edges of the display field of view, if you will, the regions right around here, are capable of seeing the comet.

SPT Once we move it in close to the center, we can no longer see it. That means that we have to resort to something a little less accurate than pointing directly at it by eye, and that is, we use an overlay, grid pattern. We find out where the comet is, and then we figure out what it's coordinates are on here and then we figure where we want to move it to, and make the appropriate entries into the computer. Those entries are all calculated from the grid overlay which we put on the display and have had to calibrate just for that purpose.

SPT Okay, we're back with the WHITE LIGHT CORONAGRAPH in a whole different mode of operation now. You can see by light here, which tells me that we are operating. We hope that the coronagraph will tell us a little bit about whether the tail behind the comet is made of gas, or dust, or what combination there is. We're able to make that same separation in observing the corona itself, and we hope we can do the same with the comet. We also hope that there'll be some interaction, between the corona, that's region around the Sun, and the solar winds which emanate from that and the comet as it passes through it. I think we'll learn quite a bit about both of them by observing that interaction.

SPT Now, a second instrument which is not just taking pictures but it also give us some information about the colors, and that is the XUV SPECTROGRAPH, extreme ultra-violet, and the spectrograph means just the way of taking a picture in various colors. In this case the color are in the ultra-violet and the extreme ultra-violet. There is a period of around eight hours when the comet come closest to the Sun as we looked at it that were able to use this instrument. And I hold anticipation that we've got some pretty good data. We'll know when we develop it upon returning home.

We're looking for some pictures of the comet in the emission lines of helium maybe some oxygen, hydrogen, helium and ionized helium, that is, helium which has lost one electron.

SPT One of the most useful for determiming what the comet is made of is the XUV SLIT SPECTROGRAPH. And that essentially, although it does not take a picture, it takes a very narrow slice, if you will, it looks at something about like this pencil only it's only one arc minute long, that's 1/60 of a degree and about 1/30 of that length in width so it's just a very narrow slit. But it takes that light and divides it it up into all of it's colors, all of it's components, in the ultra-violet and in that way tells us what are the atoms and what are some of the molecules as they show up in that wavelength range which compose the comet in the tail and the coma, which is the region around the nucleus.

SPT This is an exceptionally capable instrument in terms of what we call spectral resolution. That's the way it resolves the very fine wavelengths. That one, although when you first looked at the data is going to be a little harder to interpret, I think, once it's worked on for quite a little while will yield an awful lot of useful information. Another instrument which gives us data on the comet of much the same nature, is a scanning polychromator spectral heliometer. What it really does is just take pictures of the comet or the Sun by using a TV camera. The same way a TV camera scans whatever it looks and takes the light that it sees at each point and recreates it to make a picture, that's the same way in which this instrument works.

SPT Although we're also capable of just taking and looking at one point and then scanning across the wavelength or the color spectrum, or looking at all of the colors which are emitted from that point. So it's quite a versatile instrument. Right now we're making a scan very close to the primary line emitted by hydrogen; we call it Lyman Alpha, and we've just taken two steps now away from that line toward the center of the line, and we're taking a picture of the comet or the region close to the comet anyways using that and trying to find out just what gives the emissions.

SPT One feature about this instrument is that you never use film. You run it like a TV camera, and in the same way the TV camera which is taking my picture now. And the information goes down to ground within a matter of hours, and it can be interpreted directly. And in that way, includes the observations which we make up here for the next day, for example.

We certainly have done that with the Sun. And although the comet is fairly faint, we have learned a few things about it; we have observed a line of hydrogen Lyman alpha with this instrument. This was designed to look at the Sun, so its detectors are designed for a much higher intensity of light.

SPT And, lastly, we have two X-ray instruments, an X-ray Telescope, an X-ray Spectrometer. The two things we hope we may be able to see there: first, if there is any major x-ray emissions for the Sun, as there would be if we had a major solar storm or a solar flare of the comet could fluoresce. That means you bring light in with a very high energy and it causes the atoms and molecules to hit light at a little lower energy but yet it shows up, the same way your fluorescent lights work at home.

SPT And this fluorescence would have to take place in the x-ray wavelength, however. And if there was such an event, we may have been able to see it. That would be strictly fortuitous, if we could. But, we're not taking any chances, and we don't want to miss anything, so we're using those instruments.

SPT Secondly, if there are any x-ray stars behind the comet, that is, x-ray sources, very pinpoint sources of light which also emit x-rays, and pass through the tail of the comet, and the material around it, some of that light will be absorbed. Comparing the light which we see before and after that absorption, we can also learn a little bit about what material there is in the comet.

SPT I think that covers the Apollo telescope mount now. I also will show you some of the maneuvering which takes place. We use the Data Address System, we call it here. We work in actual units, that's units of eight, rather than ten. All entries have to be made in that, and that's what our scale is figured in, octal. If we want to make any calculations other than addition or subtraction, we have to convert to decimals, and multiply in that. We learned to think in octal quite well once we got used to it.

SPT Okay, now let's go on down to the scientific airlock, where we have a host of other instruments, and we'll show you what we have there.

END OF TAPE

1/1/74, DOY 1, MD-47, 20:04: - GMT Dump Tape 001-04

(NOTE: The commentary of 365-07 was repeated due to an equipment problem.)

SPT The comet has just gone through one of the most dynamic phases of its lifetime. It's just passed in its closest point to the Sun, we call the perihelion, on December 28th. And at that time received a maximum amount of heating from the Sun, it would ever see. And also the tail was forced to swing from one orientation around to another as the particles from the Sun, which we call the solar wind, pushed it around so it was always trying to face outward from the Sun. Now it was moving along at a pretty good clip at this time. It was moving at about a quarter of one million miles an hour. At that rate it would be able to get to the moon from the Earth in about 1 hour rather than customary 3 days it's taken us in the lunar program. Then it was relatively close to the Sun. It was about a little over 13 million miles. Now we have seen a fairly pronounced change during this period of time. And I think we have recorded a fair amount of it in words, in sketches, and certainly with the ATM data. Okay, we'll break here now and go on in and pick up the remainder of the discussion on the ATM instruments.

SPT Perhaps one of the most useful instruments we have on board to learn about comet Kohoutek is the XUV slit spectrograph, which is a rather long title.

SPT What it does is to look at a very small segment of the comet and determine what is the various colors of light emitted in the extreme ultraviolet range. Of course, again these are colors which you and I cannot see, but which the instrument can. Now, what is so particularily good about this instrument is that it is able to resolve the colors to a very fine detail. We call it spectral resolution. It is able to pick out one wavelength from another very accurately. But this allows us to look at the signatures of light put out by the atom, each atom putting out it's own particular signature at a given wavelength. Maybe we can do that now quite accurately and thereby get a better understanding of what the comet composition is. The XUV slit instrument is controlled from this portion of the panel. And it's unlike the previous instruments we've talked about. It doesn't take a picture of the Sun. It only looks at a very narrow slit. It's one arc minute long, which is a 60th of a degree in terms of what it sees and very much narrower than that direction across, that's about 1/30 of its length. So it sees a very small element of space. It's useful to us on the Sun and we hope it will in resulting features on the comet. We have another instrument on board which does something of a solar nature. We call it the scanning polychromator spectroheliometer. Now all those big words put together - they go together with this instrument - and let me try to explain it. It's a bit like the TV that we're

using right now. The TV takes a look at a picture, one little small element, then traces across, then moves down another row and traces across and in that way builds up a picture. Now this instrument does the same thing. And it's able to do it at the extreme ultraviolet wavelengths and ultraviolet, mostly in the ultraviolet. But it's also able to do something else. It's also able to cue the frequency by the wavelengths in which it will make those observations. It is also able to sit still with a very small element of space and scan across all of the wavelengths that has at its disposal. So in that way we can perform the functions. It has six different detectors, all working at the same time, so they can build up either six pictures at the same time or learn a little bit more about the spectrum with several detectors. Like a TV camera it does not record its information on film, but records it instantly on electronic data, which can be sent down to the ground rapidly. In that way we can analyze in one day and change observing the Sun. And we've hoped it would be in observing the comet. So far what it's told us is that the strongest emission we see from the comet is from a hydrogen line; we call it hydrogen Lyman alpha, a very primary emission from hydrogen. We expected to see that. We have not seen any other lines of strong emission. However, we do realize that this instrument was built for observing the Sun, which is many, many times stronger in intensity than the comet.

SPT Two other instruments that we have on board, which we use to study the Sun and learn quite a bit about and which we've turned now on to comet Kohoutek, are the X-ray instruments.

SPT The X-ray Telescope, this portion of the panel, and the X-ray Spectroheliograph, another big word, meaning that this also gets a little bit of information about the wavelengths and x-rays, as well as just a picture of the Sun in x-rays, and in this case trying for it to learn something about the comet in x-rays. Now we don't expect much emission, if at all, in the way of x-rays of the comet. It's far too cold for that. But there is an outside chance that if we have a major flare from the Sun, that the x-ray from this flare will cause the comet to fluoresce. By that we mean that the high energy emission from the Sun will stimulate the gas around the comet and in that way cause it to emit radiation of a little bit lower intensity in the x-rays and tell us something about its composition. Another thing we can learn from x-rays is absorption of x-rays from stars behind the comet. Hopefully there have been some x-ray sources behind the comet and during very long time exposures we will be able to observe what the stars look

like as the comet's tail is in front of them. And then at later times observe what the stars are like when the comet is not in front of it, and in that way learn a little bit about the composition of the material in between. That is the composition of material in the tail which has absorped the x-rays. All in all, the ATM has proved to be a very versatile set of observing instruments.

SPT We found that just because they were built with extreme capabilities, they weren't able to resolve very faint light and weren't able to resolve extremely fine detail in terms of color wavelengths. The XUV slit spectrograph and the XUV spectrograph giving us a very good picture of the comet in ultraviolet. And perhaps the x-ray instruments and the scan spectrometer, as we call it for short, all of these instruments combine together although, originally intended for solar study has given us, we feel, an excellent tool for learning about the comet.

Now we'll go on down into the lower portion of the space station and look at what we have in the way of observing instruments and also the scientific airlock.

END OF TAPE

1/01/74, DOY 1, MD-47, 21:05: - GMT Dump Tape 001-05/ D-467

SPT We're down here in the forward area of the orbital workshop, and I'd like to show you a little bit of the equipment that we're planning on using and have used for observing the comet out of the scientific airlock. Airlock is a term for a hole which is cut in the wall and which we can put instruments up against. And use that hole to allow instruments access to outside, for observations I'll discuss right now is the articulated mirror system. Without it we'd be at a loss to really make a large number of the observations we have been able to do. Essentially what it is, is a way which we can take observations of almost any point over a hemisphere of the sky or this whole area which we can look out here without moving the spacecraft around. We do that with a mirror system which is inside, projected out. And then this mirror is able to reflect light back in. Now, for example, if we wanted to reflect light back in from here, we put the mirror at this angle. We're able to rotate it all around, like so, and we're able to rotate it in this direction, also. In this way, we're able to make observations here and still have the spacecraft in what we call a solar inertial or still pointing at the Sun, which we need for electrical power and for the solar observations.

SPT The first instrument, which I think is an excellent instrument for the types of observation we've been making, is the Far-Ultraviolet Electronographic Camera, and that's this instrument here. The real attribute of this is that it can take pictures of what emissions are in the ultraviolet at extremely faint intensities. It's about 20 times more sensitive than the normal camera. It uses a high-energy source voltage; at least 20,000 volts. And when looking out of the scientific airlock, it's got about 9 degrees of field of view that it can see. And we've taken it out on the last two EVAs and made some good observations with it. During EVA, it can see a much larger part of the sky. We have a way of aligning what we want to look at, if you will, pretty much like a gunsight or - only this one also allows us to see what the field of view of the camera is. Very useful, especially during the EVA. The large hook you see on the side, which I'm using to restrain it, is what we've used during the EVA. It'll also hold it onto a handrail. Our second piece of instrumentation and the instrument for which the mirror system here was originally designed is the ultraviolet spectrograph; the proper name of it is really UV Stellar Astronomy. And this is the optical part of it, which fits on the back here, and this is able to make observations in the ultraviolet of the comet. Now here again, we're looking for the occultation or absorption by the ultraviolet light of the many ultraviolet stars which this has already measured. And in that way, we hope to learn something more about its composition.

SPT Another ultraviolet camera which we have and one which is provided through the French Government and as an experiment from one of the French laboratories is this ultraviolet camera here, which is much larger; it's a spectrograph. It's able to take pictures in three different band passes in the ultraviolet and in this way study the comet in the same way we've mentioned several times before. Another instrument we've taken outside with us is the coronograph. A contamination coronagraph is what it was originally designed for. By that, we mean an instrument which is able to look squarely at the Sun, blot out the Sun's image, and then look at the region around it or the corona or the atmosphere of the Sun. This instrument, which we have hooked onto the back here, from here to here, has a much wider field of view than the one on the ATM. And we are also able to put many filters in this instrument so that we could look at very specific bandpasses of light. And again, as we've mentioned many times, that's an important aspect. That's the name of the game. Let us understand what the light is coming from, the comet, and thereby

understand its composition. And where we put filters in is through here. We have a host of these filters. One is clear, which we can use for making observations with no filter and still exclude the light from the portion which holds it. And we have three other series of filters like this, all with different bandpasses, able to allow light of different colors to pass through. And one last one, which is also used out of the scientific airlock with the mirror system, is using horizon photography, which is normally used to study the horizon, the airglow around the Earth. And that's been most useful also in conjunction with the mirror system and understanding a little bit about the comet in ultraviolet, as well as in the optical or in the visible range. All told, we have quite a full complement of observing capabilities on board Skylab. And when we get back, I'm sure there's going to be lots of people, including ourselves, interested in a look at the data and learning an awful lot more about Comet Kohoutek.

SPT SPT at 23:41. In conclusion of TV77. This last part will be on 233, window observations. I've got the VTR running now.

1/01/74, DOY 1, MD-47, 23:43: - GMT Dump Tape 001-07

SPT The last part of the observations which I'd like to show you how we do are fairly straight forward and kind of fun. We use a mounted camera - we've been able to use it for about the past month or so. Out of one the windows we've observed the change in the brightness and in the form of the comet as it's moved in towards the Sun. And we've been able to photograph it with some fairly long time exposures with very sensitive film. I think this will give us a very good history to what the comet has looked like since we arrived here a little over a month ago.

APPENDIX D

COMET ORBITAL PARAMETERS

This section contains technical data that was used during the mission for realtime support of the comet viewing program.

Included are Comprehensive Ephemeris and Velocity Ephemeris of Comet Kohoutek, 1973f.

Comprehensive Ephemeris of

Comet Kohoutek 1973f

Prepared by Donald K. Yeomans
Computer Sciences Corp.

Distribution by Operation Kohoutek, Special Office
Code 683
NASA - Greenbelt Space Flight Center
Greenbelt, Maryland 20771

Requests for additional copies should be addressed to Frank J. Liberatore (Area code 301-982-4712) at the Operation Kohoutek Special Office

Explanation:

This ephemeris is based on the orbital calculations by Dr. Brian Mardsen (Smithsonian Astrophysical Observatory) as published in International Astronomical Union Circular No. 2588 (Oct. 31, 1973). The apparent magnitudes tabulated in the columns headed "TMAG" and "NMAG" are in every case the calculated total magnitudes according to two alternative formulae. Both formulae involve the conservative assumption that the total magnitude will vary as the inverse fourth power of the heliocentric distance. The formulae differ on the assumed absolute magnitude of the comet; previously published more optmistic brightness predictions were based on an inverse sixth power law.

For the convenience of certain users, the ephemeris is tabulated for the complete interval January 29, 1973 - July 31, 1974. However, it must be noted that positions and magnitudes given for dates that have already elapsed are not the observed values on those dates - they are the values computed from the ephemeris and the magnitude formulae.

YEAR	WK	DY	HR	J.D.	R.A. 1950.0	DEC	R.A.	DATE	DEC.	DELTA	V1	R	V2	THETA
1973	11	2	0.0	41988.5	11 36.724	- 8 12.30	11 37.938	- 8	20.23	2.0689	-44.46	1.4895	-32.82	42.10
1973	11	2	12.00	41989.0	11 38.094	- 8 21.51	11 39.308	- 8	29.43	2.0560	-44.46	1.4805	-32.92	42.22
1973	11	3	0.0	41989.5	11 39.478	- 8 30.79	11 40.692	- 8	38.72	2.0432	-44.45	1.4705	-33.01	42.34
1973	11	3	12.00	41990.0	11 40.876	- 8 40.15	11 42.091	- 8	48.10	2.0303	-44.44	1.4609	-33.11	42.45
1973	11	4	0.0	41990.5	11 42.290	- 8 49.62	11 43.505	- 8	57.56	2.0175	-44.42	1.4513	-33.20	42.56
1973	11	4	12.00	41991.0	11 43.719	- 8 59.17	11 44.935	- 9	7.11	2.0047	-44.41	1.4417	-33.30	42.66
1973	11	5	0.0	41991.5	11 45.164	- 9 8.80	11 46.380	- 9	16.75	1.9919	-44.38	1.4321	-33.40	42.77
1973	11	5	12.00	41992.0	11 46.625	- 9 18.53	11 47.841	- 9	26.48	1.9791	-44.36	1.4225	-33.50	42.86
1973	11	6	0.0	41992.5	11 48.102	- 9 28.34	11 49.319	- 9	36.30	1.9663	-44.33	1.4128	-33.61	42.96
1973	11	6	12.00	41993.0	11 49.597	- 9 38.25	11 50.814	- 9	46.21	1.9535	-44.29	1.4030	-33.71	43.05
1973	11	7	0.0	41993.5	11 51.108	- 9 48.25	11 52.326	- 9	56.21	1.9407	-44.25	1.3933	-33.81	43.13
1973	11	7	12.00	41994.0	11 52.637	- 9 58.34	11 53.856	-10	6.30	1.9279	-44.21	1.3835	-33.92	43.21
1973	11	8	0.0	41994.5	11 54.185	-10 8.53	11 55.404	-10	16.49	1.9151	-44.16	1.3737	-34.03	43.29
1973	11	8	12.00	41995.0	11 55.751	-10 18.81	11 56.971	-10	26.77	1.9024	-44.11	1.3639	-34.13	43.36
1973	11	9	0.0	41995.5	11 57.336	-10 29.19	11 58.557	-10	37.15	1.8897	-44.06	1.3540	-34.24	43.43
1973	11	9	12.00	41996.0	11 58.940	-10 39.66	12 0.162	-10	47.63	1.8769	-44.00	1.3441	-34.35	43.49
1973	11	10	0.0	41996.5	12 0.565	-10 50.24	12 1.788	-10	58.21	1.8643	-43.93	1.3342	-34.47	43.55
1973	11	10	12.00	41997.0	12 2.210	-11 0.91	12 3.433	-11	8.88	1.8516	-43.87	1.3242	-34.58	43.60
1973	11	11	0.0	41997.5	12 3.876	-11 11.69	12 5.100	-11	19.66	1.8389	-43.79	1.3142	-34.70	43.65
1973	11	11	12.00	41998.0	12 5.563	-11 22.56	12 6.789	-11	30.53	1.8263	-43.71	1.3041	-34.81	43.64
1973	11	12	0.0	41998.5	12 7.273	-11 33.54	12 8.499	-11	41.51	1.8137	-43.63	1.2941	-34.93	43.73
1973	11	12	12.00	41999.0	12 9.005	-11 44.62	12 10.232	-11	52.59	1.8011	-43.54	1.2840	-35.05	43.76
1973	11	13	0.0	41999.5	12 10.760	-11 55.81	12 11.988	-12	3.77	1.7885	-43.45	1.2738	-35.17	43.79
1973	11	13	12.00	42000.0	12 12.539	-12 7.10	12 13.768	-12	15.06	1.7760	-43.35	1.2637	-35.30	43.81
1973	11	14	0.0	42000.5	12 14.343	-12 18.49	12 15.573	-12	26.45	1.7635	-43.24	1.2534	-35.42	43.82
1973	11	14	12.00	42001.0	12 16.171	-12 29.99	12 17.402	-12	37.94	1.7510	-43.13	1.2432	-35.55	43.83
1973	11	15	0.0	42001.5	12 18.025	-12 41.60	12 19.257	-12	49.54	1.7386	-43.01	1.2329	-35.68	43.83
1973	11	15	12.00	42002.0	12 19.905	-12 53.31	12 21.139	-13	1.25	1.7262	-42.89	1.2226	-35.81	43.83
1973	11	16	0.0	42002.5	12 21.812	-13 5.13	12 23.047	-13	13.06	1.7138	-42.76	1.2122	-35.94	43.82
1973	11	16	12.00	42003.0	12 23.747	-13 17.05	12 24.983	-13	24.98	1.7015	-42.62	1.2018	-36.07	43.81
1973	11	17	0.0	42003.5	12 25.710	-13 29.09	12 26.948	-13	37.01	1.6892	-42.48	1.1914	-36.21	43.78
1973	11	17	12.00	42004.0	12 27.702	-13 41.23	12 28.941	-13	49.14	1.6770	-42.33	1.1809	-36.35	43.75
1973	11	18	0.0	42004.5	12 29.724	-13 53.48	12 30.964	-14	1.38	1.6647	-42.17	1.1704	-36.49	43.72
1973	11	18	12.00	42005.0	12 31.776	-14 5.83	12 33.018	-14	13.73	1.6526	-42.01	1.1599	-36.63	43.66
1973	11	19	0.0	42005.5	12 33.860	-14 18.29	12 35.104	-14	26.18	1.6405	-41.84	1.1492	-36.78	43.63
1973	11	19	12.00	42006.0	12 35.976	-14 30.86	12 37.222	-14	38.74	1.6284	-41.66	1.1386	-36.92	43.57
1973	11	20	0.0	42006.5	12 38.125	-14 43.54	12 39.372	-14	51.40	1.6164	-41.47	1.1279	-37.07	43.50
1973	11	20	12.00	42007.0	12 40.308	-14 56.31	12 41.557	-15	4.17	1.6045	-41.27	1.1172	-37.23	43.43
1973	11	21	0.0	42007.5	12 42.526	-15 9.20	12 43.776	-15	17.04	1.5926	-41.07	1.1064	-37.38	43.35
1973	11	21	12.00	42008.0	12 44.779	-15 22.18	12 46.032	-15	30.01	1.5808	-40.85	1.0956	-37.54	43.26
1973	11	22	0.0	42008.5	12 47.069	-15 35.27	12 48.324	-15	43.08	1.5690	-40.63	1.0847	-37.70	43.17
1973	11	22	12.00	42009.0	12 49.396	-15 48.46	12 50.653	-15	56.25	1.5573	-40.40	1.0738	-37.86	43.06
1973	11	23	0.0	42009.5	12 51.762	-16 1.75	12 53.021	-16	9.52	1.5457	-40.16	1.0629	-38.02	42.95
1973	11	23	12.00	42010.0	12 54.168	-16 15.13	12 55.429	-16	22.88	1.5341	-39.91	1.0519	-38.19	42.82
1973	11	24	0.0	42010.5	12 56.614	-16 28.60	12 57.877	-16	36.34	1.5226	-39.64	1.0408	-38.36	42.69
1973	11	24	12.00	42011.0	12 59.102	-16 42.17	13 0.368	-16	49.88	1.5112	-39.37	1.0297	-38.53	42.56
1973	11	25	0.0	42011.5	13 1.633	-16 55.83	13 2.901	-17	3.52	1.4999	-39.09	1.0186	-38.71	42.40
1973	11	25	12.00	42012.0	13 4.207	-17 9.57	13 5.477	-17	17.23	1.4886	-38.79	1.0074	-38.89	42.24
1973	11	26	0.0	42012.5	13 6.827	-17 23.39	13 8.099	-17	31.03	1.4775	-38.48	0.9961	-39.07	42.07
1973	11	26	12.00	42013.0	13 9.492	-17 37.29	13 10.768	-17	44.90	1.4664	-38.16	0.9848	-39.26	41.89
1973	11	27	0.0	42013.5	13 12.205	-17 51.26	13 13.483	-17	58.85	1.4554	-37.83	0.9734	-39.45	41.71
1973	11	27	12.00	42014.0	13 14.966	-18 5.30	13 16.247	-18	12.86	1.4446	-37.49	0.9620	-39.64	41.51
1973	11	28	0.0	42014.5	13 17.778	-18 19.40	13 19.062	-18	26.93	1.4338	-37.13	0.9505	-39.84	41.29
1973	11	28	12.00	42015.0	13 20.640	-18 33.56	13 21.927	-18	41.05	1.4231	-36.76	0.9390	-40.04	41.07
1973	11	29	0.0	42015.5	13 23.555	-18 47.77	13 24.845	-18	55.23	1.4126	-36.37	0.9274	-40.24	40.84
1973	11	29	12.00	42016.0	13 26.523	-19 2.03	13 27.816	-19	9.44	1.4021	-35.97	0.9158	-40.45	40.60
1973	11	30	0.0	42016.5	13 29.547	-19 16.31	13 30.843	-19	23.69	1.3918	-35.56	0.9041	-40.66	40.34
1973	11	30	12.00	42017.0	13 32.626	-19 30.63	13 33.926	-19	37.97	1.3816	-35.13	0.8923	-40.88	40.08
1973	12	1	0.0	42017.5	13 35.764	-19 44.97	13 37.067	-19	52.26	1.3715	-34.68	0.8804	-41.10	39.80
1973	12	1	12.00	42018.0	13 38.960	-19 59.31	13 40.267	-20	6.56	1.3615	-34.22	0.8685	-41.33	39.50
1973	12	2	0.0	42018.5	13 42.217	-20 13.66	13 43.528	-20	20.85	1.3517	-33.74	0.8566	-41.56	39.20
1973	12	2	12.00	42019.0	13 45.536	-20 27.99	13 46.851	-20	35.13	1.3421	-33.25	0.8445	-41.79	38.88
1973	12	3	0.0	42019.5	13 48.919	-20 42.30	13 50.237	-20	49.39	1.3325	-32.73	0.8324	-42.03	38.56

1974	2	7	0.0	42085.5	1	28.865	10	7.77	1	30.136	10	15.21	1.1331	40.83	1.1732	36.45	66.81
1974	2	7	12.00	42086.0	1	31.572	10	20.36	1	32.845	10	27.77	1.1450	41.20	1.1837	36.31	67.00
1974	2	8	0.0	42086.5	1	34.233	10	32.65	1	35.508	10	40.02	1.1569	41.55	1.1942	36.17	67.18
1974	2	8	12.00	42087.0	1	36.848	10	44.64	1	38.125	10	51.98	1.1689	41.89	1.2046	36.04	67.34
1974	2	9	0.0	42087.5	1	39.418	10	56.34	1	40.697	11	3.63	1.1811	42.21	1.2150	35.90	67.49
1974	2	9	12.00	42088.0	1	41.940	11	7.75	1	43.226	11	15.01	1.1933	42.53	1.2253	35.77	67.62

EXPLANATION OF SYMBOLS

J.D.= JULIAN DATE - 24000

R.A. AND DEC.- 1950.0 ARE RIGHT ASCENSION AND DECLINATION REFERRED TO MEAN EQUATOR AND EQUINOX OF 1950.0

R.A. AND DEC.- DATE ARE RIGHT ASCENSION AND DECLINATION REFERRED TO MEAN EQUATOR AND EQUINOX OF DATE

DELTA= GEOCENTRIC DISTANCE OF OBJECT IN A.U.

R= HELIOCENTRIC DISTANCE OF OBJECT IN A.U.

V1= GEOCENTRIC OBJECT VELOCITY IN KM. PER SECOND

V2= HELIOCENTRIC OBJECT VELOCITY IN KM. PER SECOND

THETA= SUN-EARTH-OBJECT ANGLE IN DEGREES

INPUT ORBIT IS BY B. MARSDEN ** SEE IAU CARD 2588

TWO BODY EPHEMERIS COMPUTATION BY

DR. C.K. YEOMANS
COMPUTER SCIENCES CORP.
SILVER SPRING, MD.
PHONE 301-589-1545

VELOCITY EPHEMERIS FOR COMET KOHOUTEK 1973f

Prepared by Donald K. Yeomans
Computer Sciences Corp.

Distribution by Operation Kohoutek Special Office
Code 683
NASA-Goddard Space Flight Center
Greenbelt, Maryland 20771

Additional copies may be requested from Frank J. Liberatore (Area Code 301, 982-4712) at the Operation Kohoutek Special Office.

EXPLANATION:

This velocity ephemeris is based on the orbital calculations by Dr. Brian Marsden (Smithsonian Astrophysical Observatory), as published in I.A.U. Circular No. 2588 (Oct. 31, 1973). The approximate method used to calculate these velocities will yield results suitable for the needs of most astronomers. However, radio astronomers and others who require highly precise topocentric velocities for use at their particular observatories should contact Dr. Thomas A. Clark, Code 693, NASA-Goddard Space Flight Center, for further information and assistance.

Definitions-

J.D. - Julian Day - 2,400,000

Delta - Distance from Earth in Astronomical Units

V1 - Geocentric radial velocity (km/sec)

R - Distance from Sun in Astronomical Units

V2 - Heliocentric radial velocity (km/sec)

VELOCITIES ARE TABULATED IN UNIVERSAL TIME AT 12-HOUR INTERVALS

THETA - Angular separation of comet from the Sun

Definitions-

J. D.	Julian Day - 2,400,000
R. A.	Right Ascension
Dec.	Declination
Delta	Distance from earth in Astronomical units
R	Distance from sun in Astronomical Units
Theta	Angular distance of comet from the sun, as seen from earth.
Beta	Angular distance of sun from the earth, as seen from the comet.
Lat	Ecliptic Latitude (1950)
Long	Ecliptic Longitude (1950)
TMAG	Total apparent magnitude calculated from assumed absolute magnitude of 5.0, as described above.
NMAG	Total apparent magnitude calculated from assumed absolute magnitude of 4.0, as described above.

For reference purposes, here are total absolute magnitudes (apparent magnitude when comet has geocentric and helicentric distances of 1 A.U. each) of several relevant comets:

Halley (1910)	4.6
Ikeya-Seki 1968 I	4.4
Tago-Sato-Kosaka 1969 IX	5.8
Bennett 1970 II	4.5

YR	MN	DY	HR	J.D.	R.A. 1950.0	DEC.	R.A. DATE	DEC.	DELTA	R	TMAG	NMAG	THETA	BETA	LAT	LONG
1973	11	1	0.0	41987.5	11 34.027	- 7 54.14	11 35.239	- 8 2.06	2.0945	1.5084	8.39	7.39	41.9	26.0	-13.7	150.9
1973	11	2	0.0	41988.5	11 36.724	- 8 12.30	11 37.937	- 8 20.22	2.0688	1.4895	8.31	7.31	42.1	26.5	-13.7	151.1
1973	11	3	0.0	41989.5	11 39.477	- 8 30.79	11 40.692	- 8 38.72	2.0432	1.4705	8.23	7.23	42.3	27.0	-13.7	151.4
1973	11	4	0.0	41990.5	11 42.290	- 8 49.62	11 43.505	- 8 57.56	2.0175	1.4513	8.14	7.14	42.6	27.5	-13.8	151.6
1973	11	5	0.0	41991.5	11 45.164	- 9 8.80	11 46.380	- 9 16.75	1.9919	1.4321	8.06	7.06	42.8	28.0	-13.8	151.9
1973	11	6	0.0	41992.5	11 48.102	- 9 28.34	11 49.319	- 9 36.29	1.9662	1.4128	7.97	6.97	43.0	28.6	-13.8	152.2
1973	11	7	0.0	41993.5	11 51.108	- 9 48.24	11 52.326	- 9 56.20	1.9407	1.3933	7.88	6.88	43.1	29.1	-13.8	152.4
1973	11	8	0.0	41994.5	11 54.185	-10 8.52	11 55.404	-10 16.49	1.9151	1.3737	7.79	6.79	43.3	29.6	-13.8	152.7
1973	11	9	0.0	41995.5	11 57.336	-10 29.18	11 58.557	-10 37.15	1.8897	1.3540	7.70	6.70	43.4	30.2	-13.9	153.0
1973	11	10	0.0	41996.5	12 0.565	-10 50.24	12 1.787	-10 59.20	1.8642	1.3341	7.60	6.60	43.5	30.8	-13.9	153.3
1973	11	11	0.0	41997.5	12 3.876	-11 11.69	12 5.100	-11 19.65	1.8389	1.3142	7.51	6.51	43.6	31.3	-13.9	153.6
1973	11	12	0.0	41998.5	12 7.273	-11 33.54	12 8.499	-11 41.51	1.8137	1.2941	7.41	6.41	43.7	31.9	-13.9	153.9
1973	11	13	0.0	41999.5	12 10.760	-11 55.81	12 11.988	-12 3.77	1.7885	1.2738	7.31	6.31	43.8	32.5	-13.9	154.3
1973	11	14	0.0	42000.5	12 14.342	-12 18.49	12 15.573	-12 26.44	1.7635	1.2534	7.21	6.21	43.8	33.1	-13.9	154.6
1973	11	15	0.0	42001.5	12 18.025	-12 41.59	12 19.257	-12 49.54	1.7386	1.2329	7.11	6.11	43.8	33.8	-14.0	155.9
1973	11	16	0.0	42002.5	12 21.812	-13 5.13	12 23.047	-13 13.06	1.7138	1.2122	7.01	6.01	43.8	34.4	-14.0	156.3
1973	11	17	0.0	42003.5	12 25.710	-13 29.08	12 26.947	-13 37.01	1.6892	1.1914	6.90	5.90	43.8	35.0	-14.0	156.7
1973	11	18	0.0	42004.5	12 29.724	-13 53.47	12 30.964	-14 1.38	1.6647	1.1704	6.79	5.79	43.7	35.7	-14.0	157.1
1973	11	19	0.0	42005.5	12 33.860	-14 18.29	12 35.104	-14 26.18	1.6405	1.1492	6.68	5.68	43.6	36.4	-14.1	156.5
1973	11	20	0.0	42006.5	12 38.125	-14 43.53	12 39.372	-14 51.40	1.6164	1.1279	6.57	5.57	43.5	37.1	-14.1	156.9
1973	11	21	0.0	42007.5	12 42.526	-15 9.20	12 43.776	-15 17.03	1.5926	1.1064	6.45	5.45	43.4	37.8	-14.1	157.3
1973	11	22	0.0	42008.5	12 47.069	-15 35.27	12 48.323	-15 43.08	1.5690	1.0847	6.33	5.33	43.2	38.5	-14.1	157.8
1973	11	23	0.0	42009.5	12 51.762	-16 1.74	12 53.021	-16 9.52	1.5457	1.0629	6.21	5.21	42.9	39.3	-14.1	158.2
1973	11	24	0.0	42010.5	12 56.614	-16 28.60	12 57.877	-16 36.34	1.5226	1.0408	6.09	5.09	42.7	40.0	-14.1	158.7
1973	11	25	0.0	42011.5	13 1.633	-16 55.83	13 2.900	-17 3.52	1.4999	1.0186	5.96	4.96	42.4	40.8	-14.2	159.2
1973	11	26	0.0	42012.5	13 6.827	-17 23.39	13 8.099	-17 31.03	1.4775	0.9961	5.83	4.83	42.1	41.6	-14.2	159.8
1973	11	27	0.0	42013.5	13 12.205	-17 51.26	13 13.483	-17 58.85	1.4554	0.9734	5.70	4.70	41.7	42.4	-14.2	160.3
1973	11	28	0.0	42014.5	13 17.778	-18 19.40	13 19.062	-18 26.93	1.4338	0.9505	5.56	4.56	41.3	43.2	-14.2	160.9
1973	11	29	0.0	42015.5	13 23.555	-18 47.77	13 24.845	-18 55.23	1.4126	0.9274	5.42	4.42	40.8	44.1	-14.2	161.5
1973	11	30	0.0	42016.5	13 29.547	-19 16.31	13 30.843	-19 23.69	1.3918	0.9040	5.28	4.28	40.3	44.9	-14.2	162.2
1973	12	1	0.0	42017.5	13 35.764	-19 44.97	13 37.067	-19 52.26	1.3715	0.8804	5.13	4.13	39.8	45.8	-14.3	162.9
1973	12	2	0.0	42018.5	13 42.217	-20 13.65	13 43.528	-20 20.85	1.3517	0.8566	4.98	3.98	39.2	46.7	-14.3	163.6
1973	12	3	0.0	42019.5	13 48.919	-20 42.30	13 50.237	-20 49.39	1.3325	0.8324	4.83	3.83	38.6	47.6	-14.3	164.4
1973	12	4	0.0	42020.5	13 55.880	-21 10.79	13 57.206	-21 17.77	1.3139	0.8080	4.67	3.67	37.9	48.5	-14.3	165.2
1973	12	5	0.0	42021.5	14 3.111	-21 39.03	14 4.446	-21 45.88	1.2960	0.7833	4.50	3.50	37.1	49.4	-14.3	166.0
1973	12	6	0.0	42022.5	14 10.625	-22 6.88	14 11.968	-22 13.59	1.2787	0.7583	4.33	3.33	36.3	50.3	-14.3	166.9
1973	12	7	0.0	42023.5	14 18.432	-22 34.20	14 19.785	-22 40.76	1.2622	0.7329	4.16	3.16	35.4	51.2	-14.3	167.9
1973	12	8	0.0	42024.5	14 26.544	-23 0.83	14 27.906	-23 7.23	1.2464	0.7073	3.97	2.97	34.5	52.1	-14.3	169.0
1973	12	9	0.0	42025.5	14 34.971	-23 26.59	14 36.343	-23 32.81	1.2315	0.6812	3.79	2.79	33.5	53.0	-14.3	170.1
1973	12	10	0.0	42026.5	14 43.724	-23 51.29	14 45.106	-23 57.32	1.2175	0.6548	3.59	2.59	32.5	53.8	-14.3	171.3
1973	12	11	0.0	42027.5	14 52.812	-24 14.70	14 54.203	-24 20.52	1.2044	0.6280	3.38	2.38	31.3	54.6	-14.3	172.6
1973	12	12	0.0	42028.5	15 2.242	-24 36.60	15 3.644	-24 42.18	1.1923	0.6008	3.17	2.17	30.2	55.4	-14.2	174.1
1973	12	13	0.0	42029.5	15 12.023	-24 56.71	15 13.435	-25 2.05	1.1813	0.5732	2.94	1.94	28.9	56.1	-14.2	175.6
1973	12	14	0.0	42030.5	15 22.162	-25 14.78	15 23.584	-25 19.85	1.1713	0.5451	2.71	1.71	27.6	56.7	-14.1	177.4
1973	12	15	0.0	42031.5	15 32.663	-25 30.51	15 34.095	-25 35.28	1.1625	0.5166	2.46	1.46	26.2	57.3	-14.0	179.3
1973	12	16	0.0	42032.5	15 43.533	-25 43.55	15 44.974	-25 45.05	1.1549	0.4875	2.19	1.19	24.7	57.6	-13.9	181.4
1973	12	17	0.0	42033.5	15 54.776	-25 53.67	15 56.225	-25 57.81	1.1486	0.4579	1.91	0.91	23.2	57.8	-13.8	183.9
1973	12	18	0.0	42034.5	16 6.398	-26 0.44	16 7.856	-26 4.22	1.1436	0.4278	1.60	0.60	21.6	57.7	-13.6	186.6
1973	12	19	0.0	42035.5	16 18.409	-26 3.51	16 19.873	-26 6.92	1.1398	0.3972	1.27	0.27	19.9	57.3	-13.3	189.8
1973	12	20	0.0	42036.5	16 30.820	-26 2.51	16 32.289	-26 5.52	1.1374	0.3660	0.91	-0.09	18.1	56.5	-12.9	193.5
1973	12	21	0.0	42037.5	16 43.651	-25 57.00	16 45.125	-25 59.60	1.136	0.3343	0.52	-0.48	16.2	55.1	-12.4	197.9

1973	12	22	0.0	42039.5	16	56.934	-25	46.53	16	58.410	-25	48.68	1.1362	0.3023	0.08	-0.92	14.2	52.9	-11.7	203.1
1973	12	23	0.0	42039.5	17	10.714	-25	30.56	17	12.191	-25	32.25	1.1371	0.2701	-0.41	-1.41	12.1	49.6	-10.8	209.6
1973	12	24	0.0	42040.5	17	25.060	-25	8.48	17	26.536	-25	9.67	1.1386	0.2381	-0.95	-1.95	9.8	44.7	-9.3	217.8
1973	12	25	0.0	42041.5	17	40.061	-24	39.56	17	41.534	-24	40.23	1.1400	0.2072	-1.55	-2.55	7.4	37.4	-7.1	228.4
1973	12	26	0.0	42042.5	17	55.810	-24	3.10	17	57.277	-24	3.22	1.1398	0.1791	-2.19	-3.19	4.7	26.9	-3.9	242.3
1973	12	27	0.0	42043.5	18	12.323	-23	18.75	18	13.781	-23	18.30	1.1358	0.1565	-2.78	-3.78	1.9	12.2	0.7	260.6
1973	12	28	0.0	42044.5	18	29.351	-22	27.54	18	30.798	-22	26.49	1.1252	0.1438	-3.17	-4.17	1.3	8.9	6.4	283.7
1973	12	29	0.0	42045.5	18	46.234	-21	32.75	18	47.669	-21	31.12	1.1061	0.1447	-3.17	-4.17	4.2	29.9	11.3	309.2
1973	12	30	0.0	42046.5	19	2.228	-20	38.52	19	3.651	-20	36.35	1.0800	0.1590	-2.82	-3.82	7.0	49.1	13.8	332.8
1973	12	31	0.0	42047.5	19	17.054	-19	47.01	19	18.464	-19	44.34	1.0503	0.1826	-2.28	-3.28	9.6	63.8	14.3	351.6
1974	1	1	0.0	42048.5	19	30.863	-18	58.12	19	32.261	-18	55.00	1.0201	0.2113	-1.71	-2.71	11.9	74.1	13.6	5.7
1974	1	2	0.0	42049.5	19	43.533	-18	10.87	19	45.320	-18	7.33	0.9910	0.2423	-1.18	-2.18	14.1	81.1	12.6	16.2
1974	1	3	0.0	42050.5	19	56.508	-17	24.28	19	57.884	-17	20.35	0.9638	0.2744	-0.70	-1.70	16.2	86.0	11.6	24.3
1974	1	4	0.0	42051.5	20	8.763	-16	37.57	20	10.128	-16	33.27	0.9387	0.3066	-0.27	-1.27	18.2	89.2	10.6	30.6
1974	1	5	0.0	42052.5	20	20.818	-15	50.17	20	22.171	-15	45.53	0.9159	0.3386	0.11	-0.89	20.1	91.2	9.7	35.6
1974	1	6	0.0	42053.5	20	32.750	-15	1.69	20	34.092	-14	56.72	0.8954	0.3702	0.44	-0.56	22.1	92.4	8.9	39.8
1974	1	7	0.0	42054.5	20	44.608	-14	11.89	20	45.940	-14	6.60	0.8770	0.4013	0.75	-0.25	24.1	93.0	8.2	43.3
1974	1	8	0.0	42055.5	20	56.418	-13	20.63	20	57.739	-13	15.03	0.8609	0.4319	1.03	0.03	26.0	93.0	7.6	46.3
1974	1	9	0.0	42056.5	21	8.191	-12	27.87	21	9.502	-12	21.98	0.8470	0.4619	1.28	0.28	28.0	92.7	7.0	48.9
1974	1	10	0.0	42057.5	21	19.926	-11	33.65	21	21.227	-11	27.48	0.8352	0.4914	1.52	0.52	30.0	92.0	6.5	51.2
1974	1	11	0.0	42058.5	21	31.613	-10	38.07	21	32.904	-10	31.66	0.8254	0.5204	1.75	0.75	31.9	91.0	6.1	53.2
1974	1	12	0.0	42059.5	21	43.235	- 9	41.32	21	44.516	- 9	34.67	0.8177	0.5489	1.96	0.96	33.9	89.8	5.6	55.0
1974	1	13	0.0	42060.5	21	54.770	- 8	43.62	21	56.043	- 8	36.75	0.8120	0.5769	2.16	1.16	35.9	88.5	5.3	56.6
1974	1	14	0.0	42061.5	22	6.196	- 7	45.22	22	7.462	- 7	38.15	0.8083	0.6045	2.35	1.35	37.9	87.0	4.9	58.1
1974	1	15	0.0	42062.5	22	17.487	- 6	46.42	22	18.746	- 6	39.17	0.8065	0.6316	2.54	1.54	39.8	85.4	4.6	59.4
1974	1	16	0.0	42063.5	22	28.617	- 5	47.51	22	29.869	- 5	40.11	0.8065	0.6584	2.72	1.72	41.7	83.7	4.3	60.7
1974	1	17	0.0	42064.5	22	39.561	- 4	48.81	22	40.808	- 4	41.26	0.8083	0.6847	2.89	1.89	43.6	82.0	4.0	61.8
1974	1	18	0.0	42065.5	22	50.298	- 3	50.60	22	51.540	- 3	42.93	0.8118	0.7107	3.06	2.06	45.4	80.2	3.8	62.9
1974	1	19	0.0	42066.5	23	0.804	- 2	53.17	23	2.043	- 2	45.44	0.8170	0.7365	3.23	2.23	47.2	78.4	3.5	63.8
1974	1	20	0.0	42067.5	23	11.064	- 1	56.79	23	12.300	- 1	48.93	0.8237	0.7616	3.40	2.40	48.9	76.6	3.3	64.7
1974	1	21	0.0	42068.5	23	21.061	- 1	1.66	23	22.295	- 0	53.74	0.8320	0.7866	3.56	2.56	50.5	74.8	3.1	65.6
1974	1	22	0.0	42069.5	23	30.784	- 0	8.00	23	32.016	- 0	0.02	0.8417	0.8113	3.72	2.72	52.0	73.1	2.9	66.4
1974	1	23	0.0	42070.5	23	40.224	0	44.05	23	41.456	0	52.06	0.8527	0.8357	3.87	2.87	53.5	71.3	2.7	67.2
1974	1	24	0.0	42071.5	23	49.375	1	34.36	23	50.607	1	42.39	0.8650	0.8598	4.03	3.03	54.9	69.6	2.5	67.9
1974	1	25	0.0	42072.5	23	58.235	2	22.84	23	59.468	2	30.88	0.8785	0.8836	4.19	3.18	56.3	67.9	2.3	68.5
1974	1	26	0.0	42073.5	0	6.803	3	9.43	0	8.037	3	17.47	0.8932	0.9072	4.33	3.33	57.5	66.3	2.2	69.2
1974	1	27	0.0	42074.5	0	15.081	3	54.10	0	16.317	4	2.12	0.9089	0.9305	4.48	3.48	58.7	64.7	2.0	69.8
1974	1	28	0.0	42075.5	0	23.073	4	36.85	0	24.310	4	44.85	0.9255	0.9536	4.63	3.63	59.8	63.2	1.9	70.4
1974	1	29	0.0	42076.5	0	30.783	5	17.69	0	32.023	5	25.65	0.9431	0.9765	4.77	3.77	60.8	61.7	1.7	70.9
1974	1	30	0.0	42077.5	0	38.219	5	56.65	0	39.462	6	4.57	0.9615	0.9991	4.91	3.91	61.7	60.3	1.6	71.4
1974	1	31	0.0	42078.5	0	45.388	6	33.77	0	46.634	6	41.65	0.9807	1.0215	5.05	4.05	62.6	58.9	1.5	71.9
1974	2	1	0.0	42079.5	0	52.299	7	9.12	0	53.548	7	16.95	1.0007	1.0438	5.19	4.19	63.4	57.6	1.4	72.4
1974	2	2	0.0	42080.5	0	58.960	7	42.76	1	0.213	7	50.53	1.0213	1.0658	5.32	4.32	64.1	56.3	1.3	72.9
1974	2	3	0.0	42081.5	1	5.382	8	14.75	1	6.638	8	22.46	1.0426	1.0876	5.46	4.46	64.8	55.1	1.1	73.3
1974	2	4	0.0	42082.5	1	11.573	8	45.17	1	12.833	8	52.82	1.0644	1.1093	5.59	4.59	65.4	53.9	1.0	73.7
1974	2	5	0.0	42083.5	1	17.545	9	14.10	1	18.808	9	21.68	1.0868	1.1308	5.71	4.71	65.9	52.7	0.9	74.1
1974	2	6	0.0	42084.5	1	23.305	9	41.60	1	24.573	9	49.12	1.1097	1.1521	5.84	4.84	66.4	51.7	0.8	74.5
1974	2	7	0.0	42085.5	1	28.665	10	7.76	1	30.136	10	15.21	1.1331	1.1732	5.97	4.97	66.8	50.6	0.7	74.9
1974	2	8	0.0	42086.5	1	34.233	10	32.65	1	35.508	10	40.02	1.1569	1.1942	6.09	5.09	67.2	49.6	0.6	75.3
1974	2	9	0.0	42087.5	1	39.418	10	56.33	1	40.697	11	3.63	1.1811	1.2150	6.21	5.21	67.5	48.6	0.5	75.6

EXPLANATION OF SYMBOLS

J.D.= JULIAN DATE - 24005
R.A. AND DEC.- 1950.0 ARE RIGHT ASCENSION AND DECLINATION REFERRED TO MEAN EQUATOR AND EQUINOX OF 1950.0
R.A. AND DEC.- DATE ARE RIGHT ASCENSION AND DECLINATION REFERRED TO MEAN EQUATOR AND EQUINOX OF DATE
DELTA= GEOCENTRIC DISTANCE OF OBJECT IN A.U.
R= HELIOCENTRIC DISTANCE OF OBJECT IN A.U.
TMAG= TOTAL MAGNITUDE
NMAG= TOTAL MAGNITUDE

```
      TMAG=5.0+5*LOG(DELTA)+10*LOG(R)
      NMAG=4.0+5*LOG(DELTA)+10*LOG(R)
```

TMAG AND NMAG SHOULD PROVIDE APPROXIMATE BOUNDS
TO THE OBSERVED MAGNITUDE
COMET MAY BE INTRINSICLY BRIGHTER AFTER PERIHELION
THETA= SUN-EARTH-OBJECT ANGLE IN DEGREES
BETA= SUN-OBJECT-EARTH ANGLE IN DEGREES
LAT AND LONG ARE ECLIPTIC LATITUDE AND LONGITUDE IN DEGREES, REFERRED TO 1950.0

REFERENCE FOR INPUT ORBIT IS I.A.U. ANNOUNCEMENT CARD 2588

TWO BODY EPHEMERIS COMPUTATION BY

DR. D.K. YEOMANS
COMPUTER SCIENCES CORP.
8728 COLESVILLE RD.
SILVER SPRING, MD.
PHONE 301-589-1545

APPROVAL

MSFC SKYLAB

KOHOUTEK PROJECT REPORT

BY

EXPERIMENT DEVELOPMENT AND

PAYLOAD EVALUATION PROJECT OFFICE

The information in this report has been reviewed for security classification. Review of any information concerning Department of Defense or Atomic Energy Commission programs has been made by the MSFC Security Classification Officer. This report, in its entirety, has been determined to be unclassified.

This document has also been reviewed and approved for technical accuracy.

Henry B. Floyd, Manager
Experiment Development and
Payload Evaluation Project Office

Rein Ise, Manager OCT 7 1974
Skylab Program Office

REFERENCES

1. Skylab Mission Report, Third Visit, JSC-08963, July, 1974.

2. MSFC Skylab Corollary Experiments Systems Mission Evaluation Report, NASA TMX-64820, August, 1974.

3. MSFC Skylab Apollo Telescope Mount Experiment Systems Mission Evaluation Report, NASA TMX-64821, June, 1974.