Chandler

NASA
SPACE VEHICLE
DESIGN CRITERIA
(CHEMICAL PROPULSION)

NASA SP-8112

# PRESSURIZATION SYSTEMS FOR LIQUID ROCKETS

OCTOBER 1975

NATIONAL AERONAUTICS AND SPACE ADMINISTRATION

# FOREWORD

NASA experience has indicated a need for uniform criteria for the design of space vehicles. Accordingly, criteria are being developed in the following areas of technology:

Environment
Structures
Guidance and Control
Chemical Propulsion

Individual components of this work will be issued as separate monographs as soon as they are completed. This document, part of the series on Chemical Propulsion, is one such monograph. A list of all monographs issued prior to this one can be found on the final pages of this document.

These monographs are to be regarded as guides to design and not as NASA requirements, except as may be specified in formal project specifications. It is expected, however, that these documents, revised as experience may indicate to be desirable, eventally will provide uniform design practices for NASA space vehicles.

This monograph, "Pressurization Systems for Liquid Rockets", was prepared under the direction of Howard W. Douglass, Chief, Design Criteria Office, Lewis Research Center; project management was by M. Murray Bailey. The monograph was written by J. C. Lee, Rocketdyne Division, and P. Ramirez, Space Division, Rockwell International Corporation and was edited by Russell B. Keller, Jr. of Lewis. Significant contributions to the text were made by Robert J. Beale and Donald Young, Jet Propulsion Laboratory, California Institute of Technology. To assure technical accuracy of this document, scientists and engineers throughout the technical community participated in interviews, consultations, and critical review of the text. In particular, Richard N. Porter, Systems Group, TRW, Inc.; Robert H. Veitch, Marshall Space Flight Center; and William A. Groesbeck and Raymond F. Lacovic, Lewis Research Center, reviewed the monograph in detail.

Comments concerning the technical content of this monograph will be welcomed by the National Aeronautics and Space Administration, Lewis Research Center (Design Criteria Office), Cleveland, Ohio 44135.

October 1975

For sale by the National Technical Information Service
Springfield, Virginia 22161
Price – $6.25

# GUIDE TO THE USE OF THIS MONOGRAPH

The purpose of this monograph is to organize and present, for effective use in design, the significant experience and knowledge accumulated in development and operational programs to date. It reviews and assesses current design practices, and from them establishes firm guidance for achieving greater consistency in design, increased reliability in the end product, and greater efficiency in the design effort. The monograph is organized into two major sections that are preceded by a brief introduction and complemented by a set of references.

The State of the Art, section 2, reviews and discusses the total design problem, and identifies which design elements are involved in successful design. It describes succinctly the current technology pertaining to these elements. When detailed information is required, the best available references are cited. This section serves as a survey of the subject that provides background material and prepares a proper technological base for the *Design Criteria* and Recommended Practices.

The *Design Criteria*, shown in italics in section 3, state clearly and briefly what rule, guide, limitation, or standard must be imposed on each essential design element to assure successful design. The *Design Criteria* can serve effectively as a checklist of rules for the project manager to use in guiding a design or in assessing its adequacy.

The Recommended Practices, also in section 3, state how to satisfy each of the criteria. Whenever possible, the best procedure is described; when this cannot be done concisely, appropriate references are provided. The Recommended Practices, in conjunction with the *Design Criteria,* provide positive guidance to the practicing designer on how to achieve successful design.

Both sections have been organized into decimally numbered subsections so that the subjects within similarly numbered subsections correspond from section to section. The format for the Contents displays this continuity of subject in such a way that a particular aspect of design can be followed through both sections as a discrete subject.

The design criteria monograph is not intended to be a design handbook, a set of specifications, or a design manual. It is a summary and a systematic ordering of the large and loosely organized body of existing successful design techniques and practices. Its value and its merit should be judged on how effectively it makes that material available to and useful to the designer.

# CONTENTS


| | Page |
|---|---|
| 1. INTRODUCTION | 1 |
| 2. STATE OF THE ART | 3 |
| 3. DESIGN CRITERIA and Recommended Practices | 98 |
| APPENDIX A – Conversion of U.S. Customary Units to SI Units | 133 |
| APPENDIX B – Glossary | 135 |
| REFERENCES | 147 |
| NASA Space Vehicle Design Criteria Monographs Issued to Date | 157 |

| SUBJECT | STATE OF THE ART | | DESIGN CRITERIA | |
|---|---|---|---|---|
| PRELIMINARY DESIGN | *2.1* | 12 | *3.1* | 98 |
| Basic Design Parameters | *2.1.1* | 12 | *3.1.1* | 98 |
| Tank Ullage Pressure | *2.1.1.1* | 13 | *3.1.1.1* | 98 |
| Pump-Fed System | *2.1.1.1.1* | 13 | *3.1.1.1.1* | 98 |
| Pressure-Fed System | *2.1.1.1.2* | 19 | *3.1.1.1.2* | 99 |
| Propellant Properties | *2.1.1.2* | 22 | *3.1.1.2* | 100 |
| Vapor Pressure | *2.1.1.2.1* | 22 | *3.1.1.2.1* | 100 |
| Chemical Stability | *2.1.1.2.2* | 24 | *3.1.1.2.2* | 100 |
| Duty Cycle | *2.1.1.3* | 25 | *3.1.1.3* | 102 |
| Single Burn | *2.1.1.3.1* | 25 | *3.1.1.3.1* | 102 |
| Multiple Start | *2.1.1.3.2* | 25 | *3.1.1.3.2* | 102 |
| Pulsing Operation | *2.1.1.3.3* | 27 | *3.1.1.3.3* | 103 |
| Selection of System Type | *2.1.2* | 27 | *3.1.2* | 103 |
| Inert-Gas System | *2.1.2.1* | 34 | *3.1.2.1* | 104 |
| Evaporated-Propellant System | *2.1.2.2* | 40 | *3.1.2.2* | 105 |
| Combustion-Products System | *2.1.2.3* | 42 | *3.1.2.3* | 105 |
| Initial System Design | *2.1.3* | 44 | *3.1.3* | 106 |
| Pressurant-Gas Evaluation | *2.1.3.1* | 44 | *3.1.3.1* | 106 |
| Design Approximations | *2.1.3.2* | 51 | *3.1.3.2* | 108 |
| DETAIL DESIGN AND INTEGRATION | *2.2* | 54 | *3.2* | 108 |
| Pressure Control Systems | *2.2.1* | 54 | *3.2.1* | 108 |

| SUBJECT | STATE OF THE ART | | DESIGN CRITERIA | |
|---|---|---|---|---|
| Prepressurization | *2.2.1.1* | 55 | *3.2.1.1* | 108 |
| Mainstage Pressurization | *2.2.1.2* | 56 | *3.2.1.2* | 109 |
| Pressure-Regulated System | *2.2.1.2.1* | 58 | *3.2.1.2.1* | 110 |
| Pressure-Switch System | *2.2.1.2.2* | 59 | *3.2.1.2.2* | 111 |
| Passive System | *2.2.1.2.3* | 61 | *3.2.1.2.3* | 111 |
| Blowdown System | *2.2.1.2.4* | 63 | *3.2.1.2.4* | 112 |
| Repressurization | *2.2.1.3* | 65 | *3.2.1.3* | 112 |
| Tank Venting | *2.2.1.4* | 67 | *3.2.1.4* | 113 |
| Venting Control | *2.2.1.4.1* | 68 | *3.2.1.4.1* | 113 |
| Zero-Gravity Venting | *2.2.1.4.2* | 69 | *3.2.1.4.2* | 113 |
| Vent Thrust | *2.2.1.4.3* | 70 | *3.2.1.4.3* | 114 |
| System Components | *2.2.2* | 71 | *3.2.2* | 114 |
| Tanks | *2.2.2.1* | 72 | *3.2.2.1* | 115 |
| Pressurant Tanks | *2.2.2.1.1* | 72 | *3.2.2.1.1* | 115 |
| Propellant Tanks | *2.2.2.1.2* | 72 | *3.2.2.1.2* | 115 |
| Pressure Regulators | *2.2.2.2* | 73 | *3.2.2.2* | 116 |
| Pressure Switches | *2.2.2.3* | 74 | *3.2.2.3* | 117 |
| Valves | *2.2.2.4* | 75 | *3.2.2.4* | 117 |
| Vent Valves | *2.2.2.4.1* | 75 | *3.2.2.4.1* | 117 |
| Relief Valves | *2.2.2.4.2* | 77 | *3.2.2.4.2* | 118 |
| Check Valves | *2.2.2.4.3* | 77 | *3.2.2.4.3* | 119 |
| Isolation Valves | *2.2.2.4.4* | 78 | *3.2.2.4.4* | 119 |
| Pressurant Heat Exchangers | *2.2.2.5* | 79 | *3.2.2.5* | 120 |
| Startup | *2.2.2.5.1* | 80 | *3.2.2.5.1* | 120 |
| Heat-Transfer Stability | *2.2.2.5.2* | 82 | *3.2.2.5.2* | 121 |
| Flow Capacity | *2.2.2.5.3* | 82 | *3.2.2.5.3* | 121 |
| Flow Stability | *2.2.2.5.4* | 83 | *3.2.2.5.4* | 122 |
| Pressurant Distributors | *2.2.2.6* | 85 | *3.2.2.6* | 122 |
| Ancillary Components | *2.2.2.7* | 86 | *3.2.2.7* | 123 |
| DESIGN EVALUATION | *2.3* | 88 | *3.3* | 124 |
| Heat-Transfer Effects | *2.3.1* | 88 | *3.3.1* | 124 |
| Thermal Control | *2.3.1.1* | 88 | *3.3.1.1* | 124 |
| Variation in Pressurant Temperature | *2.3.1.2* | 89 | *3.3.1.2* | 125 |
| Stratification of Propellant Temperature | *2.3.1.3* | 90 | *3.3.1.3* | 126 |
| Temperature Gradients in System Components | *2.3.1.4* | 91 | *3.3.1.4* | 127 |
| Mass-Transfer Effects | *2.3.2* | 93 | *3.3.2* | 128 |
| Counterpermeation | *2.3.2.1* | 93 | *3.3.2.1* | 128 |
| Pressurant Dissolution in Propellant | *2.3.2.2* | 94 | *3.3.2.2* | 129 |
| System Dynamics | *2.3.3* | 96 | *3.3.3* | 129 |
| Startup Transients | *2.3.3.1* | 96 | *3.3.3.1* | 130 |
| Ullage-Coupled Pogo | *2.3.3.2* | 97 | *3.3.3.2* | 131 |

# LIST OF FIGURES


| Figure | Title | Page |
|---|---|---|
| 1 | Relation of factors that influence ullage pressure in a pump-fed propulsion system | 14 |
| 2 | Relation of factors that influence ullage pressure in a pressure-fed propulsion system | 20 |
| 3 | Variations in system weight as a function of ullage pressure and storage pressure in a pressure-fed propulsion system | 21 |
| 4 | Example of calculated required ullage pressure vs burn time for LOX tank in a pump-fed propulsion system | 26 |
| 5 | Relation of factors that influence selection of a pressurization system | 31 |
| 6 | Variation of pressurant-gas density with storage and ullage conditions, and variation of storage-tank weight with tank shape and storage pressure | 32 |
| 7 | Schematic of the orbit-adjust subsystem on the Earth Resources Technology Satellite | 36 |
| 8 | Schematic of the velocity control and reaction control subsystems on Lunar Orbiter spacecraft | 37 |
| 9 | Schematic of the pressurization system for the Apollo LEM descent stage | 39 |
| 10 | Schematic of the evaporated-propellant pressurization system for the fuel and oxidizer tanks of the Saturn S-II stage | 41 |
| 11 | Schematic of combustion-products pressurization system for the fuel tanks of Titan stages 1 and 2 | 43 |
| 12 | Schematic of a pressure-switch control system | 60 |
| 13 | Sketch of orifice configuration used in pressurization system on Saturn S-II stage | 62 |
| 14 | Schematic of propulsion subsystem on the Pioneer 10 and 11 spacecraft | 64 |
| 15 | Ullage pressures in S-IVB tanks as recorded on the AS-509 flight | 66 |
| 16 | Arrangement of explosive-actuated valves for multiple engine starts | 79 |
| 17 | Shell-and-tube heat exchanger (J-2 engine) | 81 |
| 18 | Schematic of pressurization system for Apollo Service Propulsion System | 81 |

| Figure | Title | Page |
|---|---|---|
| 19 | Flow-capacity graphs for the J-2 and J-2S heat exchangers . . . . . | 84 |
| 20 | Variation of $LH_2$ temperature at pump inlet during Saturn S-II flight . . . . . | 92 |

# LIST OF TABLES


| Table | Title | Page |
|---|---|---|
| I | Chief Design Features of Propellant Tank Pressurization Systems on Representative Operational Boosters | 4 |
| II | Chief Design Features of Propellant Tank Pressurization Systems on Representative Operational Upper Stages | 6 |
| III | Chief Design Features of Propellant Tank Pressurization Systems on Representative Operational Spacecraft | 8 |
| IV | Example of Determination of Minimum Required and Supplied Ullage Pressures for Liquid-Oxygen Tank in a Pump-Fed Propulsion System | 15 |
| V | Variables Affecting NPSH Requirements for Pumps on J-2 Engine (S-II Stage) | 18 |
| VI | Boiling Points of Common Propellants | 23 |
| VII | Types of Pressurization Systems and Major Variations | 28 |
| VIII | Comparison of Three Basic Types of Operational Pressurization Systems | 29 |
| IX | Comparative Weights for Evaporated Oxygen and for Stored Helium as Pressurants of S-II Oxidizer Tank | 33 |
| X | Compatibility of Representative Pressurants With Common Propellants | 45 |
| XI | Comparison of Chief Features of Control Systems for Mainstage Pressurization | 57 |

# PRESSURIZATION SYSTEMS FOR LIQUID ROCKETS

## 1. INTRODUCTION

The pressurization system in a liquid rocket propulsion system provides a controlled gas pressure in the ullage space of the vehicle propellant tanks. In a rocket with a "pressure-fed" propellant-feed system, the ullage pressure is directly responsible for forcing the propellant through the feed-system lines and into the rocket-engine combustion chamber at the proper flowrate and pressure; in a "pump-fed" system, the ullage pressure supplies propellant to the engine pumps at the proper pump inlet conditions, and the pump delivers the propellant to the engine at specified rates and pressures. This monograph, drawing on the wealth of design experience that has accumulated in the development of pressurization systems for liquid rockets operational in the last 15 years, presents guidelines for the successful design of pressurization systems for main propulsion, auxiliary propulsion, and attitude control systems for boosters, upper stages, and spacecraft.

Over the years, pressurization system designers have developed many innovations in response to the challenge of advanced propulsion systems and an increasing diversity of mission requirements. For example,

- The use of hydrogen as a high-energy fuel in pump-fed propulsion systems introduced the need to incorporate variable pressurization to compensate for the vapor pressure increase resulting from in-flight temperature stratification of propellant.

- The use of pressure-supported monocoque tank structures and common bulkheads between tanks to minimize stage hardware weight placed more stringent requirements on the accuracy of ullage pressure control.

- The problems of absorption of gases in propellant and counter permeation of pressurants and propellant vapors across permeable expulsion bladders used in pressure-fed propulsion systems were aggravated by long-duration missions, and new materials and techniques had to be developed.

- Multiple-start missions introduced the requirement for repressurization after an extended coast period.

Design solutions for these and other problems have led to a high degree of sophistication in the various pressurization designs and pressure control systems used in current rocket propulsion systems.

The material in this monograph is organized to center around tasks that are common to any pressurization-system design; the designer thus is encouraged to utilize the information in any system to which it can be applied. The design begins with a preliminary phase in which the system requirements are received and evaluated; the emphasis here is on the major factors that influence the selection of system type and initial design. Next comes a detail-design and integration phase in which the controls and the hardware components that make up the system are determined. The final phase, design evaluation, provides analysis of problems that may arise at any point in the design when components are combined and considered for operation as a system. Throughout the monograph, the design tasks are considered in the order and manner in which the designer must handle them. Within the task areas, the critical aspects of structural, performance, and physical-boundary requirements that the pressurization system design must satisfy are presented.

# 2. STATE OF THE ART

Current designs for propellant-tank pressurzation include three basic system types that are applied with varying degrees of sophistication to a wide range of propellants and to the two methods for propellant feed to the engine. Tables I, II, and III display the chief features of these designs as they appear in major operational boosters, upper stages, and spacecraft. As shown, relatively high tank pressures (100 to 300 psi*) are characteristic of pressure-fed propulsion systems, in which the propellant tank pressure must be higher than the pressure in the rocket-engine combustion chamber; comparatively low tank pressures (20 to 50 psi) are used for the pump-fed propulsion systems, in which turbine-driven pumps raise the propellant pressure to a level (above tank pressure) suitable for injection into the rocket-engine combustion chamber.

The three basic types of pressurization systems considered in this monograph are stored inert gas, evaporated propellant, and combustion products. In the stored-inert-gas system, the pressurant is obtained from gas storage vessels (tanks) in which a chemically nonreactive gas is stored at relatively high pressure. In the evaporated-propellant system, the pressurant is obtained by evaporation of the propellant in the tanks. In the combustion-products system, the pressurant gas is obtained by combustion of propellants in the turbine gas generator, by combustion in a solid-propellant gas generator, or by injection of hypergolic** material into the main propellant tank.

By far, the most widely used system for pressurizing the propellant tank has been the stored-inert-gas system with ambient-temperature helium as the pressurant. This system has been the exclusive choice for pressure-fed propulsion systems, where it is compatible with the generally small tank sizes and with the frequent requirement for multiple-start or pulsing operation of thrusters. On several pump-fed propulsion stages, inert-gas pressurization appears in the form of pressurant stored at cryogenic temperatures and warmed in a turbine-exhaust heat exchanger before being injected into the propellant tank. The evaporated-propellant system also appears in more than one form, the oldest and simplest being self pressurization of cryogenic propellants by their own boiloff vapor. The most common form, used for oxidizer-tank pressurization on several of the large booster stages, includes a turbine-exhaust heat exchanger that evaporates liquid oxidizer taken from the pump discharge. Thus far, the combustion products system has been used to supply pressurant in several small military vehicles and to pressurize the fuel tanks of the Titan stages.

Each system has unique advantages and disadvantages. The selection of any one type for a particular application is accomplished by evaluating the basic design requirements and determining which system best satisfies all the system requirements. This process is carried out in the preliminary design phase described in the section that follows.

*Factors for converting U. S. customary units to the International System of Units (SI Units) are given in Appendix A.
**Terms, symbols, and materials are defined or identified in Appendix B.

Table 1. – Chief Design Features of Propellant Tank Pressurization Systems on Representative Operational Boosters*

| Vehicle Tank | Tank volume, $ft^3$ | Flight pressurization | | | | | | Pre-pressurization on pad, psi |
|---|---|---|---|---|---|---|---|---|
| | | Storage type | Ullage pressure, psig | Pressurant | Pressurant storage | Pressurant conditioning | Pressurant control system | |
| Atlas | | | | | | | | |
| RP-1 (a) | 1790 | Inert gas | 60 | Helium | Six to eight individually shrouded spheres (chilled by liquid nitrogen before launch) | Warmed in turbine-exhaust heat exchanger | During booster firing, ullage pressures are controlled by helium regulators, blowdown mode of operation initiated after booster section is jettisoned | 72 (helium) |
| Oxygen (a) | 2920 (for Mariner '69) | Inert gas | 25 | Helium | | | | 37 (helium) |
| Delta* | | | | | | | | |
| UDMH | 57 | Inert gas | 345 | Helium | Ambient-temperature helium in three spheres | None | Ullage pressures kept slightly above atmospheric on the pad | None |
| IRFNA | 82 | Inert gas | 345 | Helium | | None | | None |
| Saturn S-IB | | | | | | | | |
| RP-1 | 5870 | Inert gas | 15-33 | Helium | Ambient-temperature helium in 48 fiber-glass spheres | None | Helium flow is controlled by flow restrictor, relief valve set at 21 psig. | 29-33 (helium) |
| Oxygen | 9070 | Evaporated propellant | 47-58 | Oxygen | NA | Oxygen from pump outlet evaporated in turbine-exhaust heat exchangers | GOX flow-control valve controls tank pressure, relief valve set at 45-47 psig | 55-58 (helium) |

| | | | | | | | | |
|---|---|---|---|---|---|---|---|---|
| Saturn S-IC | | | | | | | | |
| RP-1 | 29 200 | Inert gas | 6.8-15 | Helium | Four cylinders inside oxidizer tank | Warmed in turbine-exhaust heat exchanger | Step regulated by five parallel flow-control valves with flow restrictors. | 27.5-29 (helium) |
| Oxygen | 47 300 | Evaporated propellant | 3.3-5.3 | Oxygen | NA | Oxygen from pump outlet evaporated in turbine-exhaust heat exchangers | Pressure-regulated system on first eight vehicles; flow restrictor on last five vehicles. | 24.2-26.5 (helium) |
| Thor | | | | | | | | |
| RJ-1 | 930 | Inert gas | 12-48 | Nitrogen | Ambient-temperature nitrogen in three spheres | None | Partial blowdown and partial $GN_2$ bleed through flow restrictor. | 48 (nitrogen) |
| Oxygen | 1400 | Evaporated propellant | 34-48 | Oxygen | NA | Oxygen from pump outlet evaporated in turbine-exhaust heat exchanger | Relief valve controls tank pressure; GOX flow is controlled by flow restrictor in supply line. | 48 (nitrogen) |
| Titan II – Stage 1 | | | | | | | | |
| A-50 | 1635 | Combustion products | 24-29 | Fuel-rich combustion products | NA | Turbine exhaust cooled in fuel-gas cooler | Ullage pressure and pressurant flow are controlled by flow restrictor in gas-cooler outlet line. | 24 (nitrogen) |
| $N_2O_4$ | 1956 | Evaporated propellant | 34-41 | $N_2O_4$ | NA | Oxidizer from pump outlet evaporated in turbine-exhaust heat exchanger | Ullage pressure and pressurant flow are controlled by cavitating venturi in liquid nitrogen supply line. | 28 (nitrogen) |

* Delta is pressure fed; all others are pump fed.

(a) Tank of monocoque construction (pressure stabilized).

NA = not applicable

Table II. – Chief Design Features of Propellant Tank Pressurization Systems on Representative Operational Upper Stages*

| Stage Tank | Tank volume, $ft^3$ | Flight pressurization | | | | | | Pre-pressurization on pad, psi |
|---|---|---|---|---|---|---|---|---|
| | | System type | Ullage pressure, psig | Pressurant | Pressurant storage | Pressurant conditioning | Pressurant control system | |
| Agena | | | | | | | | |
| UDMH | 80 | Inert gas | 20-55 | Helium | Ambient-temperature helium in a single sphere | None | Explosive-actuated valve initiates flow-restrictor-controlled flow of helium to the tanks. | 38 (helium) |
| IRFNA | 100 | Inert gas | 10-45 | Helium | | None | | 30 (helium) |
| Centaur | | | | | | | | |
| Hydrogen | 1268 | Evaporated propellant | 19-26 | Hydrogen | Ambient-temperature helium in one sphere for repressurization | Propellant boiloff pressurizes both tanks | Blowdown mode of operation during engine firing; pressurization provided just before engine restart. Relief valves set upper limit on tank pressures. | 20 (helium) |
| Oxygen (a) | 377 | Evaporated propellant | 29-30 | Oxygen | | | | 25 (helium) |
| Saturn S-II | | | | | | | | |
| Hydrogen | 37 737 | Evaporated propellant | 27-30 | Hydrogen | NA | $GH_2$ bled from engine | First nine vehicles, pressure-regulated systems (both tanks), last four vehicles, flow-restrictor system. | 34-36 (helium) |
| Oxygen | 12 745 | Evaporated propellant | 36-42 | Oxygen | NA | Oxygen from pump outlet evaporated in turbine-exhaust heat exchanger | | 37-39 (helium) (b) |

| | | | | | | | | |
|---|---|---|---|---|---|---|---|---|
| Saturn S-IV | | | | | | | | |
| Hydrogen | 4256 | Evaporated propellant | 35-38 | Hydrogen | NA | $GH_2$ bled from engine | Pressure switch. | 30-32 (helium) |
| Oxygen | 1263 | Inert gas | 45-48 | Helium | Three spheres in hydrogen tank | (c) | Pressure regulated. | 45-48 (helium) |
| Saturn S-IVB | | | | | | | | |
| Hydrogen | 10 500 | Evaporated propellant | 28-31 | Hydrogen | NA | $GH_2$ bled from engine (d) | Pressure switches control ullage pressure in both tanks by controlling solenoid valves in the pressurant supply lines. (e) | 32 (helium) |
| Oxygen | 2830 | Inert gas | 38-41 | Helium | Nine spheres in hydrogen tank | Helium heated in turbine exhaust heat exchanger (d) | | 38 (helium) |
| Titan II – Stage 2 | | | | | | | | |
| A-50 | 451 | Combustion products | 49-53 | Fuel-rich combustion products | NA | Turbine exhaust cooled in fuel-gas cooler | Ullage pressure and pressurant flow are controlled by flow restrictor in gas-cooler outlet line. | 50 (nitrogen) |
| $N_2O_4$ | 501 | Inert gas (blowdown) | 50-56 | Helium | NA | No conditioning | Blowdown from prepressurized condition. | 57 (helium) |

*All pump fed
(a) Tanks of monocoque construction (pressure-stabilized).
(b) Common bulkhead deflection due to $LH_2$ prepressurization causes the LOX tank pressure to increase up to 42 psia.
(c) Helium heat exchanger integral with hydrogen/oxygen burner using low-pressure (tank-supplied) propellants.
(d) Cold helium, warmed by a hydrogen/oxygen burner, pressurizes both tanks prior to engine restart.
(e) The hydrogen tank uses continuous propulsive venting to hold tank pressure at 19.5 psia during earth orbit. During translunar coast, venting systems on both tanks are used for cold helium dump.
NA = not applicable

Table III. – Chief Design Features of Propellant Tank Pressurization Systems on Representative Operational Spacecraft*

| Spacecraft System** Tank | Tank volume, $ft^3$ | Flight pressurization | | | | | | Pre-pressurization on pad, psi |
|---|---|---|---|---|---|---|---|---|
| | | System type | Ullage pressure, psig | Pressurant | Pressurant storage | Pressurant conditioning | Pressure control system | |
| Advanced Technology Satellite (ERG) | | | | | | | | |
| $N_2O_4$ (2 tanks) | 1.331 (each) | Inert gas | 370 | Nitrogen | NA | None | Blowdown (3:1). | 370 (nitrogen) |
| Apollo LEM Ascent | | | | | | | | |
| A-50 | 36.5 | Inert gas | 184 | Helium | Ambient-temperature helium in two spheres | None | Pressure-regulated (redundant pressure regulators); pressurization system activated 15 minutes before lunar liftoff. | 162 (helium) |
| $N_2O_4$ | 36.5 | Inert gas | 184 | Helium | | None | | 156 (helium) |
| Apollo LEM Descent | | | | | | | | |
| A-50 | 67 | Inert gas | 235 | Helium | Cryogenic helium in a double-wall sphere (super-critical-helium system) (a) | Two-pass fuel/helium heat exchanger warms the pressurant (b) | Pressure-regulated (redundant pressure regulators); pressurization system activated one hour before engine ignition; initial in-flight pressurization uses ambient-temperature helium. | 113 (helium) |
| $N_2O_4$ | 67 | Inert gas | 235 | Helium | | | | 154 (helium) |

| | | | | | | | | |
|---|---|---|---|---|---|---|---|---|
| Apollo Service Module (Block II) | | | | | | | | |
| A-50 (2 tanks) | 129 and 162 | Inert gas | 170 | Helium | Ambient-temperature helium in two spheres | Fuel/helium and oxidizer/helium heat exchangers are used to equalize pressurant and propellant temperatures | Pressure-regulated (redundant pressure regulators); pressurization system activated before liftoff because Service Module must operate in event of mission abort. | 170 (helium) |
| $N_2O_4$ (2 tanks) | 129 and 162 | Inert gas | 170 | Helium | | | | 170 (helium) |
| Atmospheric Explorer | | | | | | | | |
| Orbit-Adjust Subsystem | | | | | | | | |
| $N_2H_4$ (6 tanks) | 1.192 (each) | Inert gas | 600 | Nitrogen | NA | None | Blowdown (12:1). | 600 (nitrogen) |
| Earth Resources Technology Satellite | | | | | | | | |
| Orbit-Adjust Subsystem | | | | | | | | |
| $N_2H_4$ | 1.331 | Inert gas | 540 | Nitrogen | NA | None | Blowdown (5:1). | 540 (nitrogen) |
| Lunar Orbiter | | | | | | | | |
| Velocity-Control Subsystem | | | | | | | | |
| A-50 (2 tanks) | 0.8449 (each) | Inert gas | 190 | Nitrogen | Ambient-temperature nitrogen in one sphere | None | Pressure-regulated; one regulator services all tanks. | <20 (nitrogen) |
| $N_2O_4$ (2 tanks) | 1.03 (each) | Inert gas | 190 | Nitrogen | | None | | <20 (nitrogen) |

(continued)

Table III. – Chief Design Features of Propellant Tank Pressurization Systems on Representative Operational Spacecraft* (concluded)

| Spacecraft System** Tank | Tank volume, $ft^3$ | Flight pressurization | | | | | | Pre-pressurization on pad, psi |
|---|---|---|---|---|---|---|---|---|
| | | System type | Ullage pressure, psig | Pressurant | Pressurant storage | Pressurant conditioning | Pressure control system | |
| Mariner MM'69 (Mariner 6 and 7) | | | | | | | | |
| $N_2H_4$ | 0.404 | Inert gas | 308 | Nitrogen | Ambient-temperature nitrogen in one sphere | None | Pressure-regulated. | 280 (nitrogen) |
| Mariner MM'71 (Mariners 8 and 9) | | | | | | | | |
| MMH | 7.755 | Inert gas | 250 | Nitrogen | Ambient-temperature nitrogen in two spheres | None | Pressure-regulated; one regulator serves both tanks. | 35 (nitrogen) |
| $N_2O_4$ | 7.755 | Inert gas | 250 | Nitrogen | | None | | 35 (nitrogen) |
| Mariner Venus Mars (MVM '73) | | | | | | | | |
| $N_2H_4$ | 1.361 | Inert gas | 380 | Nitrogen | NA | None | Blowdown (4:1). | 380 (nitrogen) |
| Pioneer 10 and 11 | | | | | | | | |
| $N_2H_4$ | 1.331 | Inert gas | 565 | Nitrogen | NA | Two heaters supply two watts continuously to ullage area | Blowdown (4:1). | 565 (nitrogen) |

| | | | | | | | | |
|---|---|---|---|---|---|---|---|---|
| Surveyor<br>Vernier Propulsion Subsystem | | | | | | | | |
| MMH monohydrate (3 tanks) | 0.429 (each) | Inert gas | 730 | Helium | Ambient-temperature helium in one sphere services all tanks | None | Pressure-regulated; one regulator serves all six tanks. | <100 (helium) |
| 90 $N_2O_4$: 10 NO (3 tanks) | 0.429 (each) | Inert gas | 730 | Helium | | None | | <100 (helium) |
| Titan Transtage | | | | | | | | |
| A-50 | 142 | Inert gas | 165 | Helium | Ambient-temperature helium in two spheres | None | Pressure-switch. | 45-92 (helium) |
| $N_2O_4$ | 177 | Inert gas | 165 | Helium | | None | | 45-92 (helium) |
| Titan Transtage Attitude Control System | | | | | | | | |
| $N_2H_4$ | 8.68 | Inert gas | 370 | Nitrogen | NA | None | Blowdown (2:1). | 370 (nitrogen) |
| Viking Lander ACS and De-Orbit System | | | | | | | | |
| $N_2H_4$ | 3.221 | Inert gas | 364 | Nitrogen | NA | None | Blowdown (2:1). | 364 (nitrogen) |
| Viking Orbiter | | | | | | | | |
| MMH | 25.926 | Inert gas | 245 | Helium | Ambient-temperature helium in one sphere | None | Pressure-regulated; one regulator serves both tanks. | 100 (helium) |
| $N_2O_4$ | 25.926 | Inert gas | 245 | Helium | | None | | 100 (helium) |

*All are pressure-fed.
**Main propulsion system unless otherwise specified.
(a) A separate sphere holds one cubic foot of ambient-temperature helium for in-flight initial pressurization before engine start.
(b) A separate heat exchanger located in the storage sphere uses warm helium from the first pass to condition the pressurant remaining in the sphere (part of the supercritical-helium storage system).
NA = not applicable

## 2.1 PRELIMINARY DESIGN

In all cases, the objective of pressurization system design is to satisfy the applicable mission performance and reliability requirements while minimizing the cost per pound of system weight. Typically, the type of propellant-feed system already has been selected. Thus, if a pump-fed propulsion system has been chosen, the pressurization system will be required to supply ullage pressures less than 100 psi to a bipropellant tank system. (All pump-fed propulsion systems to date have been bipropellants because the specific impulse values attainable with a bipropellant system are higher than those achievable with a monopropellant system). If a pressure-fed propulsion system has been chosen, the pressurization system will be required to supply ullage pressures greater than 100 psi to either a monopropellant or bipropellant system. Nonetheless, there remains wide latitude in the selection of the system type. Only pressurant incompatibility with the propellant is the basis for elimination of a system type in the initial design phase.

Arriving at a design that best meets all the mission requirements is a complex and involved assignment, because some of the problems that stem from the initial pressurization system may have far-reaching effects on other vehicle subsystems. In some instances a solution to one problem gives rise to another problem. In addition, the system selection must be supported by weight and cost tradeoffs that weigh the criticality and importance of the requirements and their conflicting effects on the overall system performance, weight, and reliability. A cost-effective technique developed for spacecraft takes into account such parameters as component weight, component development cost, component production cost, reliability requirements, and required service life to determine the best overall system (ref. 1). With modification, this technique can be applied to boosters and upper stages.

### 2.1.1 Basic Design Parameters

As noted, the type of propellant feed system is determined prior to the preliminary design phase, usually on the basis of the engine performance and mission total impulse requirements. For example, a pump-fed propulsion system invariably is chosen when (1) the engine must produce more than 1000 lbf of thrust or (2) the total mass exceeds 20 000 lbm. In contrast, a pressure-fed propulsion system, which can be a mono- or bi-propellant system, is used when (1) the mission duty cycle is a pulse mode or (2) the propellant mass is less than 8000 lbm. For those areas where the feed-system selection is not obvious, a weight-and-cost tradeoff study is made to determine the better system.

In a pump-fed propulsion system, the engine chamber pressure is supplied by a tank-mounted or engine-mounted pump (ref. 2). Consequently, the primary purpose of the pressurization system is to provide suction head adequate to prevent pump cavitation, and its secondary purpose is to provide sufficient pressure to keep the propellant tank(s) from collapsing as a result of various structural loads. Ullage pressures less than 100 psi are

characteristic of the feed system. The pump-fed propulsion system can be used for a single- or multiple-burn mission (i.e., boosters or upper stages) but normally cannot be used for pulse-mode operations because of the inherently slow system-response characteristics. Because the pump-fed propulsion system typically is a bipropellant system (e.g., $LOX/LH_2$, LOX/RP-1, or $N_2O_4$/A-50), the concern for pressurant/propellant compatibility is doubled. In addition, the effects of the vapor pressure of each propellant must be taken into account.

In a pressure-fed propulsion system, the pressurization system supplies the required engine chamber pressure and thus ullage pressures greater than 100 psi are typical. The pressure-fed system can be used for any duty cycle (i.e., single burn, multiple burn, and pulse mode), and is the primary choice for auxiliary control systems (ACS) and reaction control systems (RCS) of upper stages and spacecraft and for spacecraft main propulsion. In spacecraft, earth-storable propellants are used almost exclusively. Although the vapor pressure of an earth-storable propellant usually is so low as to be of no consequence, the propellant vapors corrode the pressurization system hardware if the mission duration is long.

The basic system parameters of concern to the pressurization system designer in the preliminary design phase are tank ullage pressure, properties of the propellants, and engine duty cycle.

### 2.1.1.1 TANK ULLAGE PRESSURE

As noted, the basic function of the pressurization system is to provide proper pressure in the ullage space of the propellant tanks. The ullage pressure values must be selected to facilitate optimum vehicle payload performance. In pump-fed propulsion systems, the importance of saving tank weight, particularly on upper stages, has resulted in an intensive effort to maintain the tank pressure as low as possible while still satisfying the other operating parameters such as pump inlet pressure requirements (ref. 2), tank structure support (ref. 3), propellant loading, and venting. In pressure-fed propulsion systems, tank weight saving is also important, but the overall optimization includes the relationship of ullage pressure to thrust chamber pressure and subsequently to thrust chamber performance. Thus, ullage pressures greater than or at least equal to chamber pressure plus pressure losses are characteristic of pressure-fed propulsion systems.

#### 2.1.1.1.1 Pump-Fed System

The interrelated factors that influence ullage pressure in a pump-fed propulsion system are presented in figure 1. In some cases where the propellant tanks are of monocoque construction (refs. 3 and 4), the minimum ullage pressure (pressure above ambient) is determined by the tank structural limit under various load conditions including vibration

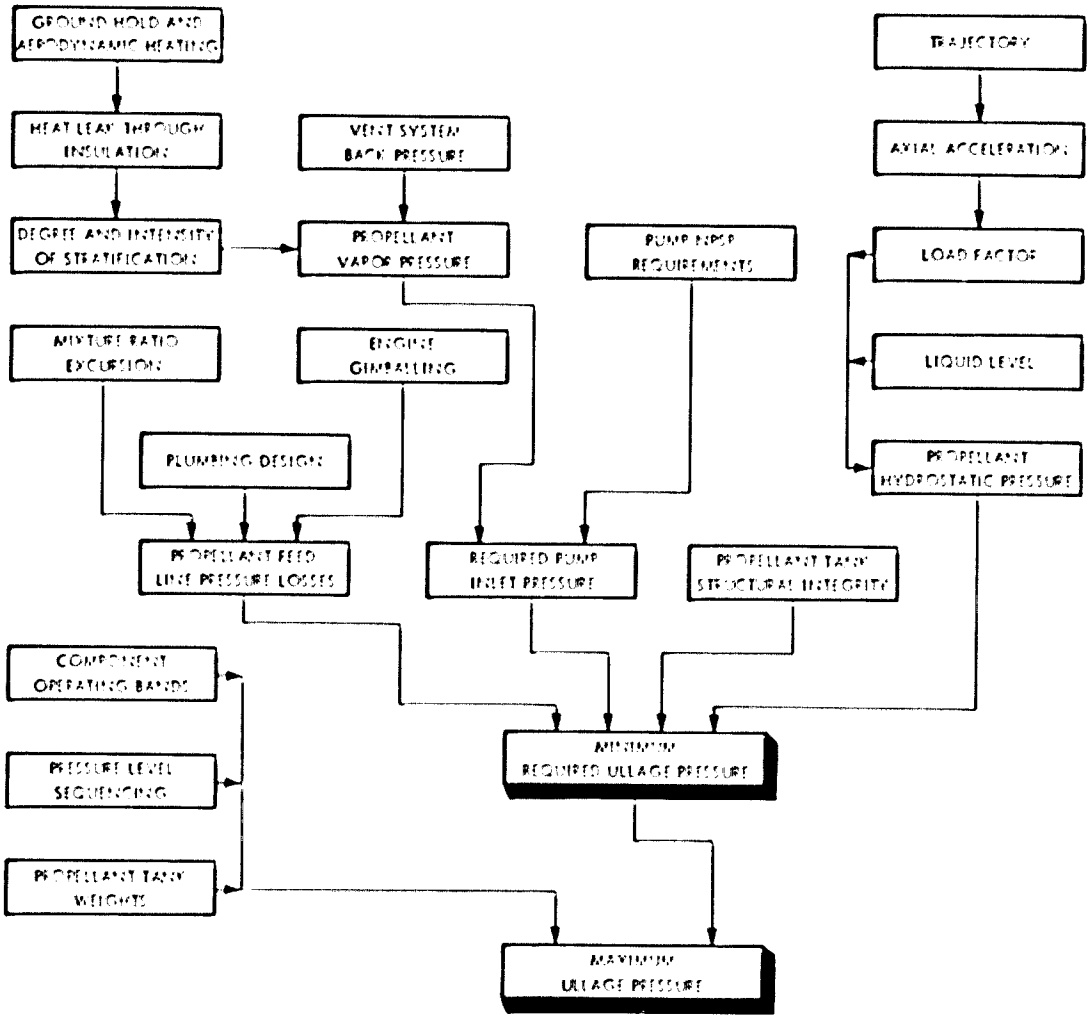


Figure 1. - Relation of factors that influence ullage pressure in a pump-fed propulsion system.

and wind loads during launch and flight. The maximum tank operating pressure, on the other hand, is influenced strongly by the component operating bands, pressure-level sequencing, and tank weight considerations (ref. 5). It is not desirable simply to add a wide safety margin to the required ullage pressure, because a higher pressure level generally means a thicker pressure vessel; this thickening in turn results in a heavier system that lessens the payload-carrying capability of the vehicle. At all times, the ullage pressures in the propellant tanks must be sufficient to produce the pump inlet pressures required to ensure that propellants enter the engine pumps without cavitation.

Table IV illustrates by example how the minimum required and supplied ullage pressure levels are determined (at a single condition) for a pressure-regulated, pump-fed, liquid-oxygen propulsion system (ref. 5). The minimum required ullage pressure is calculated from engine data, propellant properties, and propellant feedline conditions. The minimum supplied ullage pressure is determined for known maximum tank pressure and regulator and relief-valve operating-pressure bands. In the example, a dead band of 1.5 psi is selected as a safety margin between the maximum regulated pressure and the relief-valve minimum reseat pressure. As shown in the table, the calculated minimum supplied pressure exceeds the required ullage pressure by 7.55 psi.

**Table IV. – Example of Determination of Minimum Required and Supplied Ullage Pressures for Liquid-Oxygen Tank in a Pump-Fed Propulsion System (ref. 5)**

| Variable | Pressure*, psi |
|---|---|
| Minimum required ullage pressure | |
| Propellant vapor pressure at 164.5 °R | 17.00 |
| Required corresponding net positive suction pressure | 12.14 |
| Minimum required pump inlet total pressure | 29.14 |
| Propellant-feedline pressure loss | 2.10 |
| Propellant hydrostatic pressure | −2.79 |
| Minimum required ullage pressure | 28.45 |
| Minimum supplied ullage pressure** | |
| Maximum permissible tank pressure | 42.00 |
| Relief-valve control band | −3.00 |
| Relief-valve minimum reseat pressure | 39.00 |
| Dead band | −1.50 |
| Maximum supplied ullage pressure | 37.50 |
| Regulator control band | −1.50 |
| Minimum supplied ullage pressure | 36.00 |
| Margin: 36.00 – 28.45 | 7.55 |

*Sample value

**Pressure-regulated system

Net positive suction pressure and net positive suction head, terms used to describe pump inlet pressure requirements, are defined as follows:

$$NPSP = P_o - P_v \tag{1}$$

$$NPSH = \frac{(P_o - P_v)(144)}{\rho_p} = \frac{(NPSP)\,144}{\rho_p} \tag{2}$$

where

NPSP = net positive suction pressure, psi

NPSH = net positive suction head, lbf-ft/lbm

$P_v$ = propellant vapor pressure at the pump inlet, psi

$\rho_p$ = propellant density, lbm/ft$^3$, at the pressure and temperature at the pump inlet

144 = area conversion factor, in.$^2$/ft$^2$

$P_o$ = pump inlet total pressure, psi

$$P_o = P_u + P_{acc} + P_{fric} \tag{3}$$

$P_u$ = ullage-gas pressure, psi

$P_{acc}$ = propellant hydrostatic pressure due to acceleration, psi

$P_{fric}$ = propellant-feedline pressure loss due to friction, psi

$P_{acc}$ and $P_{fric}$ are defined by the expressions

$$P_{acc} = \frac{H\,(F/W)\,\rho_p}{1728} \tag{4}$$

$$P_{fric} = \frac{K}{2}\left(\frac{\dot{w}_p}{A}\right)^2 \frac{144}{\rho_p \; g_c} \tag{5}$$

where

$H$ = effective height of propellant liquid column from gas/liquid interface to pump inlet, in.

$F$ = engine thrust, lbf

$W$ = projected vehicle weight, lbm

1728 = volume conversion factor, $in.^3/ft^3$

$K$ = line loss coefficient, dimensionless

$\dot{w}_p$ = propellant mass flowrate, lbm/sec

$A$ = feedline duct cross-sectional area, $in.^2$

$g_c$ = gravitational conversion constant, $32.17 \frac{\text{lbm-ft}}{\text{lbf-sec}^2}$

As shown by equation (3), the pump inlet total pressure is the algebraic sum of the ullage-gas pressure, the propellant hydrostatic pressure due to acceleration, and the pressure losses in the propellant feedline. Therefore, the ullage pressure required to provide a prescribed NPSH will vary with the axial acceleration (the load factor F/W), propellant level, propellant flowrate, and propellant temperature.

The NPSH required varies with different pump designs (ref. 2) and also is affected by variations of the propellant mixture ratio (MR) and propellant temperature. Propellant MR (the ratio of oxidizer mass flowrate to fuel mass flowrate) and propellant temperature can vary during engine operation. The MR changes normally are planned functions, whereas propellant temperature changes are functions of incoming heat to the propellant. Hence, any calculation of the required NPSH must specify the MR and the anticipated propellant temperature at the time. Consideration of these variations is necessary in establishing the minimum ullage-gas pressures to meet the pump NPSH requirements under all conditions. Table V shows some typical design values for the variation in required pump NPSH as the MR varies from 4.8 to 5.5 (ref. 5).

Table V. – Variables Affecting NPSH Requirements for Pumps on J-2 Engine (S-II Vehicle) (ref. 5)

| Variable | Required NPSH (ft of fluid) | |
|---|---|---|
| | Oxygen | Hydrogen |
| Nominal value at the pump inlet flange of minimum required NPSH at nominal engine inducer flowrate and speed (zero-g conditions) | 21.70 | 120 |
| Random effects (4.3σ value) (includes instrumentation inaccuracies, run-to-run variations, engine manufacturing tolerances, etc.) | 6.52 | 22.80 |
| Stage effects (variations in stage configuration beyond engine manufacture control, e.g., variations in installation of propellant feed duct) | 0.66 | 3.01 |
| NPSH required at pump inlet flange for engine mixture ratio (MR) of 4.8 | 28.88 | 145.81 |
| Effect of nominal MR excursion (0.7) | 9.00 | 14.10 |
| NPSH required at pump inlet flange for MR = 5.5 | 37.88 | 159.91 |
| Correction for losses in pump inlet duct for MR = 4.8 | 4.03 | 48.75 |
| Correction for additional duct losses for MR = 5.5 | 1.40 | 5.20 |
| NPSH required at entrance of pump inlet duct for MR = 5.5 | 43.31 | 213.86 |

In the Centaur propulsion system, separate turbine-driven boost pumps mounted at the tank sump are employed to minimize the tank ullage pressure requirements (ref. 6). The boost pumps also eliminate the need for recirculating propellants through the feed lines during prelaunch and launch operations to minimize temperature stratification. Once sufficient flow goes through the pump, ingested vapor bubbles will collapse at the pump discharge, and the pump can perform satisfactorily even with boiling in the bulk liquid. An examination of tables I and II shows the effect of boost pumps: the Centaur, the only vehicle using them, has ullage pressures approximately 25% lower than those in the other $LH_2/LO_2$ stages.

#### 2.1.1.1.2 Pressure-Fed System

In a pressure-fed propulsion system, the ullage pressures in the tanks must be sufficient to overcome the feed-system resistance and injector pressure drop and force propellants into the combustion chamber at the desired chamber pressure. The required ullage pressure thus is a function of the engine chamber pressure and propellant-feed-system pressure losses, and engine performance is directly affected by ullage pressure. In addition, suppression of undesired propellant-vapor bubble formation and pressurant gas bubble formation in propellant feedlines, components, engine coolant passages, and injectors may require a higher ullage pressure than would be chosen otherwise. The interrelated factors that influence ullage pressure in a pressure-fed propulsion system are presented in figure 2.

In optimizing the mass of pressure-fed propulsion system, an important consideration is the mass of the pressurant tank, which depends on the amount of gas required to expel the propellant. For a single-burn mission, a rapid expulsion of the propellant burn can be modeled, adiabatic expansion in the pressurant tank being assumed. However, in planetary missions, the number of engine firings can easily exceed 20. Nominally, there are two trajectory corrections: the first shortly after insertion into the heliocentric trajectory, and the second prior to orbit insertion. Usually, these burns are 20 sec or less. Following the last trajectory correction is the orbit-insertion maneuver, which can be from 600 to 3000 sec in duration, the time depending on the mission. Following orbit insertion are orbit-adjust and orbit-trim maneuvers, which range from 1 to 10 sec in duration. There is sufficient time between engine firings for thermal equilibrium to be reestablished in the propellant and pressurant tanks. In a typical spacecraft propulsion system for a planetary mission, there are numerous engine firings that are widely separated in time (days to months). Thus, adiabatic conditions can be assumed to prevail except for (1) single, widely spaced short burns where the gas storage-pressure drop is less than 5 percent or (2) very low flows for long time periods ($>$ 10 min); in either case, isothermal conditions can be assumed (ref. 7). These assumptions are made only for preliminary analysis. For firm design optimizations, the designer makes use of the many computer programs available; these programs take into account many, if not all, of the important variables involved in accurate determination of the amount of gas required to expel the propellants.

Figure 3 illustrates a weight tradeoff for determing the best ullage pressure and storage pressure levels for a regulated pressure-fed propulsion system with helium as the pressurant. Variables include the tank weights for pressurant storage and propellant, the total weight of pressurant stored, and the weights of the engine assembly, feedlines, and other components of the propulsion system. Storage-vessel weight is a function of tank wall material density, required vessel thickness, and required vessel size. Storage-vessel size depends on the gas mass to be delivered, the residual gas mass, and the pressure level in the vessel after the last withdrawal period. In turn, the residual mass and pressure are functions of (1) the amount of heat transferred to the pressurant, and (2) the downstream pressure-drops at rated flow from the storage vessel outlet to the regulator inlet. Heat transfer within the ullage space

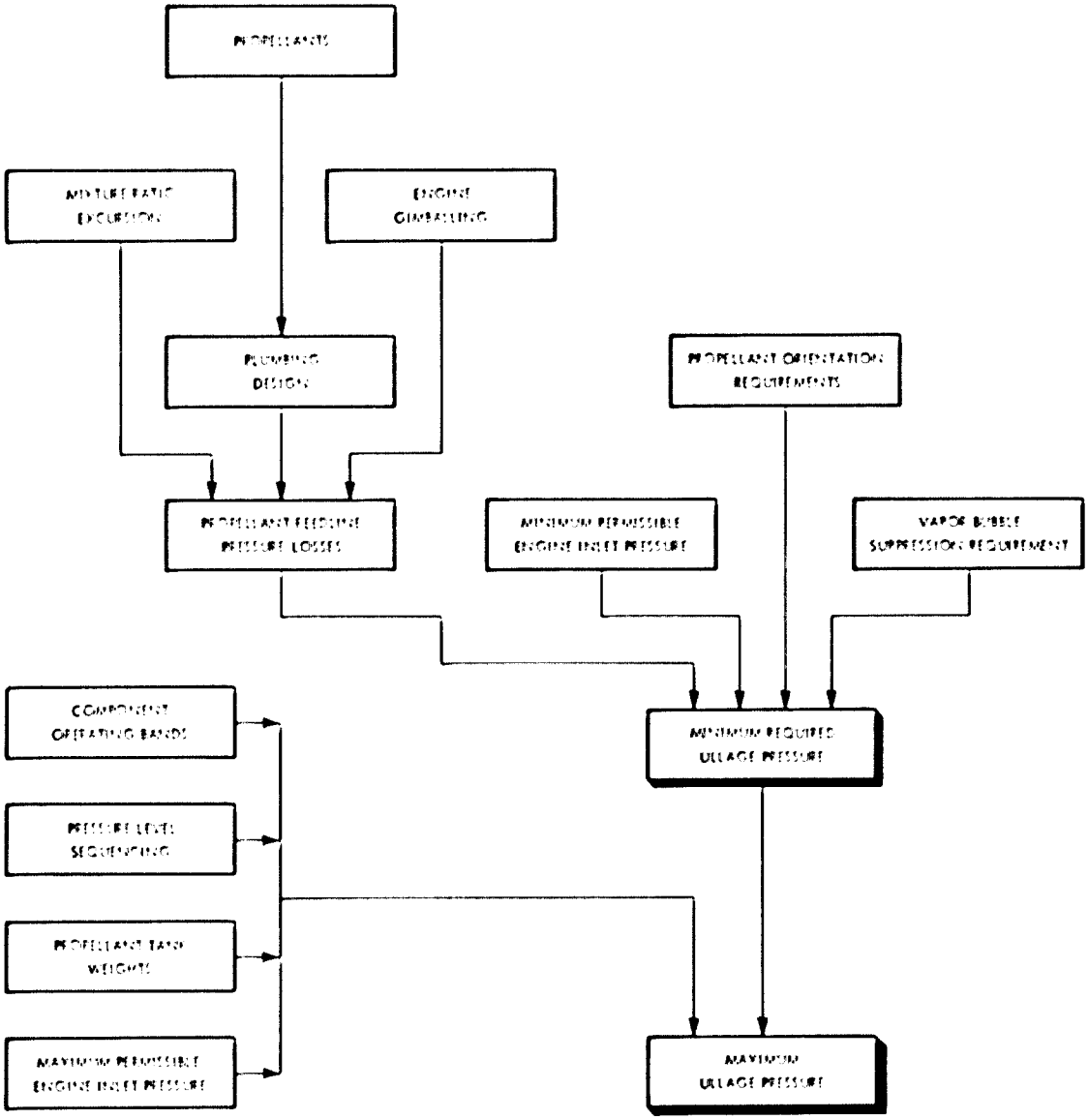


Figure 2. - Relation of factors that influence ullage pressure in a pressure-fed propulsion system.

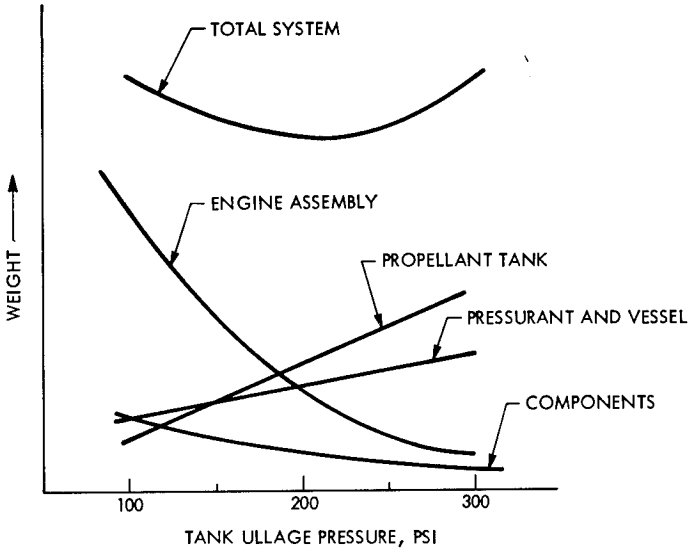


(a) SYSTEM DRY WEIGHT VERSUS TANK ULLAGE PRESSURE (3000 PSI STORAGE PRESSURE)

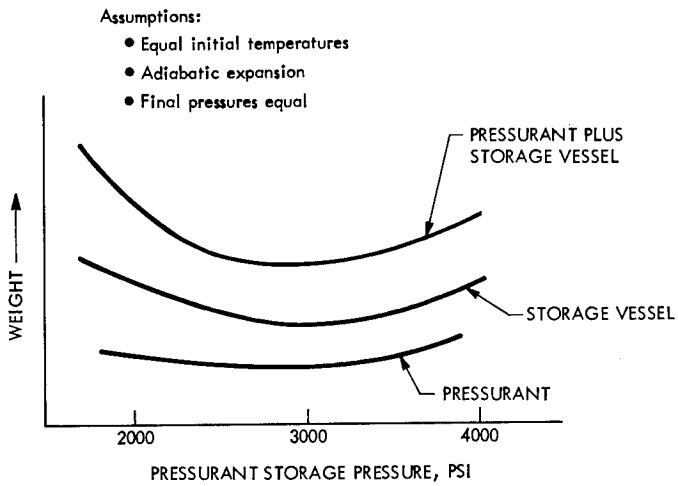


(b) PRESSURANT AND VESSEL WEIGHT VERSUS STORAGE PRESSURE (250 PSI ULLAGE PRESSURE)

Figure 3. - Variations in system weight as a function of ullage pressure and storage pressure in a pressure-fed propulsion system.

also influences the ullage gas density and thus the required amount of pressurant mass delivered to the ullage. For the example shown, the weight tradeoff shows a minimum (optimum) tank ullage pressure of approximately 210 psi and a minimum storage pressure of 3000 psi. These trends are not necessarily valid for all regulated pressure-fed systems.

### 2.1.1.2 PROPELLANT PROPERTIES

The various liquid propellants in use have a wide range of characteristics that affect pressurization system design directly or indirectly. Properties of these propellants can be found in references 8 through 12. For boosters and upper stages, the bipropellant combinations $LOX/LH_2$ and $N_2O_4$/A-50 have been favored (tables I and II). For spacecraft propulsion, the monopropellant hydrazine has been the most popular (table III).

Vapor pressure and chemical stability in the operating temperature range are two of the more important properties that influence design. In general, the storable propellants have low vapor pressures and good stability, properties that facilitate long-term storage and ullage pressure regulation without the need for elaborate venting and temperature conditioning. In contrast, cryogenic propellants have introduced a host of problems associated with propellant temperature stratification and vapor pressure variation, increased pump NPSH, and tank ullage venting not found in storable-propellant systems.

#### 2.1.1.2.1 Vapor Pressure

Propellant saturated vapor pressure places stringent requirements on the control of propellant storage temperature and tank ullage pressure. These requirements, in turn, determine the need for propellant and pressurant temperature conditioning, tank ullage venting, and the selection of pressurants. For instance, in the case of the high vapor pressure (low normal boiling point) cryogenic hydrogen and oxygen, the tank ullage gas is vented in order to dissipate the heat infiltrated into the tanks and also to condition the propellant temperature. In contrast, in the case of Mariner- or Pioneer-type pressure-fed propulsion systems, the ullage gas need not be vented to keep the earth-storable propellants at their nominal operating conditions. Through the use of state-of-the-art thermal control and structural techniques, the designer can achieve a balance such that heat leaks into the propellant tanks can be more than offset by radiation to space. Space itself offers the best place for the rejection of heat. The vehicle need not be a heat sink.

For missions away from the sun, the designer must be careful not to let the propellants cool down. In fact, he may have to make provision to add heat to the propellant to maintain the proper propellant temperature.

High-vapor-pressure propellants are an asset to certain pressurization systems. Evaporated-propellant pressurization currently is successful with the cryogenic propellants

and also the storable-oxidizer $N_2O_4$ (boiling point 529.7°R). In the Centaur vehicle, the vapor pressure of bulk propellants (hydrogen and oxygen) boiling in the tanks is utilized to provide the modest pressure required at the inlet of tank-mounted boost pumps. In systems requiring higher pressures, superheated vapor is obtained by passing the propellant through an engine heat exchanger or some other heat source; e.g., the system on S-II (ref. 5). The boiling point of a propellant (table VI) indicates its suitability for use in an evaporated-propellant type of pressurization system.

**Table VI. – Boiling Points of Common Propellants (adptd. from ref. 10)**

| Propellant | Boiling point*, °R |
|---|---|
| Hydrogen | 36.7 |
| Fluorine | 153.1 |
| Oxygen | 162.7 |
| Ammonia | 431.6 |
| Nitrogen tetroxide | 529.7 |
| IRFNA | 600.0 |
| UDMH | 605.7 |
| A-50 | 629.7 |
| MMH | 652.2 |
| Hydrazine | 695.7 |
| 98% hydrogen peroxide | 758.7 |
| RP-1 | 881.7 |

*At 14.7 psi

It is worthwhile to note that the tank ullage pressure consists of the sum of partial gas pressures of all the species in the gas mixture. In the case of ullage gas containing only propellant vapor, an ullage pressure higher than the saturated vapor pressure at the propellant bulk temperature can be obtained only by pressurizing with superheated vapor; the vapor, by virtue of its intimate contact with the liquid surface, raises the liquid surface temperature. However, the propellant has not attained temperature balance with the gas; thus condensation of gas and consequent decay of ullage pressure will persist until the bulk of the propellant and the ullage gas come to an equilibrium temperature. For this reason, pressurization with evaporated propellants is not deemed feasible when required ullage pressures are greater than 100 psi and long mission durations necessitate sustained temperature equilibrium. In these cases, inert pressurants invariably are used. However, for short mission durations, an evaporated-propellant system using ammonia is a possibility.

Another effect of propellant vapor pressure on the pressurization system is the counterpermeation phenomenon treated in section 2.3.2.1.

#### 2.1.1.2.2 Chemical Stability

Propellant chemical stability is important to the pressurization process; propellants must not react adversely when exposed to the pressurant, to system components, or to system temperatures. Some rocket fuels tend to decompose violently when heated. It is for this reason, in addition to vapor pressure considerations, that vaporized propellant as pressurant is limited chiefly to the oxidizers. Liquid hydrogen is a notable exception; it also has the advantage of vaporizing as a gas of very low molecular weight.

In some instances, a chemical reaction during heating is an advantage. The oxidizer ($N_2O_4$) tanks of the Titan II and III vehicles (ref. 13) are pressurized with $N_2O_4$ vapor generated by passing the liquid $N_2O_4$ through a turbine-exhaust heat exchanger. The $N_2O_4$ undergoes both evaporation and dissociation during the heating; as the temperature increases, the vapor dissociates in steadily increasing proportion to $NO_2$ (refs. 8 and 9). The benefits of the dissociation lie in reduced molecular weight of the gas. The molecular weight of $N_2O_4$ vapor decreases from 92 to 46 lbm/lbm-mole at 100 percent dissociation. As a result, a substantial weight savings is realized by operating at the highest possible ullage temperature consistent with other considerations such as increased rate of vapor condensation, corrosion of metals and polymeric seals and valve seats in the system, and heating of the tank wall.

Thrusters employing hydrazine, a monopropellant, are used for midcourse correction maneuvers on the Ranger, Mariner, and other spacecraft. The pressurization systems for hydrazine are similar to those for bipropellant systems. One pressurization problem more critical with hydrazine than with its derivatives (e.g., MMH) is its susceptibility to heterogenous decomposition when exposed to various surfaces, particularly contaminated or oxidized surfaces. Heterogeneous decomposition increases with temperature, contact surface area, and degree of contamination as well as the catalytic activity of the surface (ref. 14). Thorough cleaning, passivation, and avoidance of large surface areas such as wire screens are steps that minimize heterogeneous decomposition of monopropellants such as hydrogen peroxide and hydrazine. Gradual rise of the ullage pressure from accumulation of decomposed gases was a subject of concern for the long-term storage of hydrazine required in the 1966 Mariner spacecraft (ref. 15). Since that time, improved materials for tanks, bladders, and other components exposed to hydrazine have virtually eliminated this concern.

Occasionally, there exists a requirement for sterilizing the spacecraft, as in the case of the early Rangers (ref. 16) and currently the Viking spacecraft (ref. 17). The usual sterilization process includes the propellant and pressurant, and sterilization heating ($\approx 750^\circ$ R) usually produces high ullage pressures, increased corrosion rates in the propellant tanks, and increased heterogeneous decomposition in the fuel tank. In addition, decomposition gases may be trapped inside the expulsion bladder or diaphragm after sterilization. This latter condition may result in most of the ullage volume of noncondensible gases being located on the liquid side, thus rendering the expulsion medium ineffective in delivering gas-free

propellants. To circumvent this problem, surface-tension acquisition devices in addition to an expulsion bladder were used for the Mariner '73, and similar devices were developed for the Viking Orbiter (ref. 17).

### 2.1.1.3 DUTY CYCLE

Single-burn, multiple-burn, engine throttling, and pulsing operations are engine duty-cycle requirements that strongly affect selection and design of a pressurization system. All boosters and some upper stages have single-burn requirements; upper stages with pump-fed propulsion systems (e.g., Centaur and S-IVB) are required to restart after a period of zero-g coasting. Multiple-burn and pulsing operations are common in spacecraft. The duty cycle of spacecraft auxiliary propulsion systems (APS) is primarily a pulse-mode operation, with some applications requiring a steady-state burn period.

#### 2.1.1.3.1 Single Burn

The single-burn mission generally can be considered as involving the simplest duty cycle for the pressurization system. The major applications are the bipropellant pump-fed propulsion systems in boosters and in upper stages where the total duration of mainstage pressurization is less than ten minutes and occurs within a few minutes after launch. If the single-burn mission has an engine MR change (a form of throttling), the required ullage pressure changes because the required engine inlet NPSP and propellant flowrate normally change. The S-II vehicle is an example of a single-burn mission with an engine MR shift. Figure 4 (ref. 5) presents the time-oriented profiles of calculated required and minimum supplied ullage pressure in the S-II LOX tank during the boost period; the effects of the engine MR shift are plainly shown.

For the single-burn mission, the pressurant usually is introduced into the ullage at a temperature significantly higher than that of the bulk propellant. The low ullage-gas density is maintained, and thus pressurant weight is conserved, by the transient temperature stratifications that occur in both the propellant (sec. 2.3.1.3) and the ullage gas (sec. 2.3.1.2) during the short duty cycle. Initial pre-pressurization (sec. 2.2.1.1) is carried out with a ground gas supply, because in some cases it is the only way possible.

#### 2.1.1.3.2 Multiple Start

Multiple-burn missions include a scheduled nonpowered coasting period between burns that extends the total mission duration considerably beyond that of any single-burn vehicle. Propulsion systems that have multiple-burn duty cycles also can have throttling capability, as in Surveyor vernier propulsion system or the S-IVB stage. The S-IVB two-burn missions

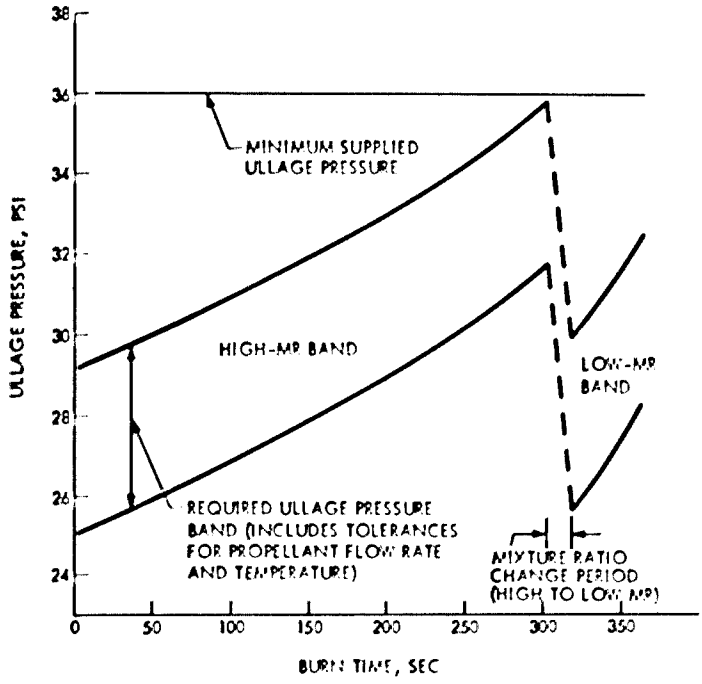


Note: Required ullage pressure increases at constant mixture ratio because of decreasing hydrostatic pressure and increasing propellant temperature.

Figure 4. - Example of calculated required ullage pressure vs burn time for LOX tank in pump-fed propulsion system (ref. 5).

typically included a two-minute first burn at relatively constant high engine MR followed by a 135-minute coast period before the dual-level-MR six-minute second burn. Approximately the first minute of the second burn was at low engine MR with the remainder of the burn at high MR. For any system with multiple-burn capability, provisions must be made so that adequate ullage pressure is available, or can be made available, at the time the engine is required to restart.

In cryogenic propellant systems, the stratified ullage gas and propellant in the tank come to thermal equilibrium during the coasting period after engine shutdown. In the heat and mass exchange between the ullage gas and the propellant, the "hot" ullage gas is cooled while the propellant is either heated or partially vaporized, adding mass into the ullage. In most cases, the tank ullage pressure shows an initial decay as a result of the heat and mass exchange, and then a gradual rise as heat infiltrates through the tank wall. Usually, the ullage gas is stabilized at temperature and pressure lower than its initial values immediately after engine

shutdown. A low-pressure venting mode usually is provided for hydrogen tanks in order to maintain a low propellant temperature and a low ullage pressure until a subsequent restart is initiated with the tank repressurized to the ullage pressure required to provide pump NPSH.

In pressure-regulated inert-gas pressurization systems as used in many pressure-fed propulsion systems, heat is exchanged between the pressurant and its storage vessel and between the pressurant and the propellant. In some cases, considerable gas cooling may result from the blowdown process as pressurant flows from the storage vessel. In cases where the pressurant entering the tank is cooler than the propellant, the ullage pressure can rise above the regulator set point as a result of heat exchange with the propellant during the regulator lockup period that follows (sec. 2.3.1.1); this rise can cause the system relief valves to modulate. The pressurization system designer can avoid this cause of pressurant loss by heating the gas before it enters the ullage. For example, in the Able-Star stage helium pressurant was heated by a solid-propellant gas generator adjacent to the storage tank; in the Pioneer 10 and 11 spacecraft, radioisotope heaters were used to warm the pressurant.

#### 2.1.1.3.3 Pulsing Operation

Almost all spacecraft attitude control and reaction control systems operate by pulsing the thrusters. Because of the fast response required for pulsing operation, pressure-fed propulsion systems invariably have been used. Normally, these systems are pressurized by stored inert gas. The spacecraft propellant tanks often contain bladders, surface-tension acquisition devices, or a combination of these designs to provide for proper operation in random "low-g" fields and to reduce the absorption of gases into the propellants (sec. 2.3.2.2) during mission durations that may extend to days or weeks (ref. 3). An example of a bladdered tank system is the ERTS orbit-adjust subsystem; the Mariner Mars '73 and the Viking Orbiter are examples of propellant sytems with a surface-tension acquisition device and a bladdered tank. Spacecraft such as the ATS, Intelsat, Pioneer, and others are also spin-stabilized, which aids in orienting the propellant. Gaseous propellants such as ammonia and propane stored in high-pressure accumulators have been used for pulsing operations (ref. 1); the gaseous propellants are generated onboard the vehicle by pumping liquid propellants through vaporizers, as in the ATS III (ref. 18), or by extracting vapor from the ullage cavity, as in the spin-stabilized Explorer 30 spacecraft (ref. 1).

## 2.1.2 Selection of System Type

The most important single decision in designing a pressurization system is selection of the type of system. Table VII summarizes the primary types of pressurization systems and their major variations; selected examples of flight-proven systems are given. In addition to the systems shown, Freon and other volatile liquids occasionally are used in combination with metal diaphragms or other impermeable barriers to produce a simple system that maintains an ullage pressure that is a function only of temperature.

Table VII. – Types of Pressurization Systems and Major Variations

| Inert Gas | Evaporated Propellant[a] | Combustion Products[a] |
|---|---|---|
| Stored at ambient temperature under high pressure<br>• Thor fuel<br>• Saturn IB fuel<br>• All spacecraft with pressure-regulated systems<br><br>Stored at cryogenic temperature and heated in heat exchanger<br>• S-IVB oxidizer<br>• LEM Descent fuel and oxidizer<br><br>Blowdown from prepressurized condition<br>• Titan II oxidizer<br>• ERTS orbit-adjust[c]<br>• Intelsat[c] | Boiloff of saturated propellants in tank<br>• Centaur fuel and oxidizer<br><br>Drawn from injector manifold<br>• S-II fuel<br>• S-IVB oxidizer<br><br>Evaporated in turbine-exhaust heat exchanger<br>• S-II oxidizer<br><br>Stored as a gas under pressure[b] | Turbine exhaust gas<br>• Titan II fuel tanks<br><br>Separate solid-propellant gas generator<br>• Lance fuel and oxidizer<br><br>Separate liquid-propellant gas generator[b]<br><br>Main tank injection[b] |

[a]Prepressurization on ground provides initial start pressure
[b]Not proven on flight vehicle
[c]Monopropellant

The three primary types differ significantly in pressurant storage or source, compatibility characteristics, and suitability for various vehicle missions. The choice of the best pressurization system for a specific mission involves a careful evaluation of the system design constraints. The best choice is the minimum weight system that operates within the constraints and is consistent with the program cost and reliability goals. Tables I, II, and III show that in the past, the "best" choice most often has been some variation of either the inert-gas or evaporated-propellant types. Flight experience with a combustion-products system has been limited to a few military vehicles and to fuel-tank pressurization on the Titan boosters.

System screening. – For most applications, an initial screening based on comparisons of the three systems (table VIII) will effectively eliminate one or two of the types. The screening process usually is performed by a team of experienced designers, and the results are justified to management. The elimination usually is based on pressurant/propellant incompatibility, pressurant availability, or a judgement that the system type could not be competitive from the standpoint of weight, cost, and reliability. The combustion-products type has been the one most often eliminated, usually on the basis that the resulting gases are at high

Table VIII. – Comparison of Three Basic Types of Operational Pressurization Systems

| System | Applicability | | | | | Propellant compatibility | System complexity | System weight |
|---|---|---|---|---|---|---|---|---|
| | Feed system | | Duty cycle | | | | | |
| | Pump | Pressure | Single burn | Multiple burn | Pulse | | | |
| Inert gas | Yes | Yes | Yes | Yes | Yes | Compatible with all propellants. However, condensation may be a problem with some gases (e.g., nitrogen). | Simple system. Storage (location and pressure) may increase complexity. Thermal conditioning (if required) may increase complexity. | Storage-system weight may be excessive for large system.<br><br>Gas weight may be excessive for large system. |
| Evaporated propellant | Yes | Yes | Yes | Yes[a] | Yes | Generally compatible with own species. | Very simple system in flow-restrictor form (eliminates high-pressure storage). Regulator would add complexity. Separate evaporator, if required, is a minor complexity. | Gas weight may be high.<br><br>No storage-tank weight. |
| Combustion products | Yes | Yes | Yes | No[b] | No | Fuel-rich product generally is compatible only with its own fuel. | Simple system, although less reliable than the other two. (Gas generator and possible gas cooler increase complexity). | Gas weight may be high.<br><br>Storage-system weight relatively low. |

[a]Generally requires some repressurization before restart.
[b]Weight penalty for control system when restart is required.

temperatures and include condensible solids, excessive water, or other objectional elements. The inert-gas system is unique in that it cannot be eliminated for any application except on the basis that the weight of its associated storage vessel makes it appear uncompetitive. Helium is compatible with virtually all propellants, and in terms of weight is surpassed only by hydrogen gas at comparable temperatures. It is noteworthy that most pressure-fed propulsion systems have used inert-gas pressurization, primarily because of the mission duty cycle (sec. 2.1.1.3) and the propellants used (tables I-III and refs. 1, 19, and 20).

For those system designs where past experience, pressurant/propellant incompatibility, pressurant availability, or preliminary weight, cost, and reliability tradeoffs cannot eliminate two of the three pressurization system types, a more detailed system-selection process must be made. Figure 5 illustrates the relation of relevant factors and the logic of the system-selection process. The process is iterative and involves progressing through the steps several times at different levels of detail.

After initial screening, the major effort involves detailed weight tradeoffs of the remaining candidate pressurization systems. Weight calculations include the total weight of pressurant as well as the hardware weight associated with storing and conditioning the pressurant within the system.

For the stored-inert-gas system, for example, by far the most common means of storage (ref. 3, table II) has been a titanium-alloy sphere containing helium at approximately 3000 psi. Spheres of this type weigh about 20 pounds per cubic foot of internal volume. Depending on the pressurant type and storage temperature, the sphere weight can be as much as 11 times the weight of the gas it contains. The high weight ratio corresponds to helium storage at ambient temperature and makes it clear that storage should be at reduced temperatures if the stored-gas system is to be weight competitive with an evaporated-propellant system.Figure 6 illustrates (1) the variation of gas density with storage and ullage conditions in several different pressurization systems and (2) the typical variation of storage-tank specific weight with tank shape and storage pressure (data from ref. 21). Readily apparent is the wide difference in density between storage and ullage conditions that has been achieved in the LEM Descent and S-IVB systems. (The supercritical-helium storage system in the LEM is discussed in section 2.1.2.1; the helium storage system used in the S-IVB is discussed later in this section).

For the systems still under consideration in the selection process, gas and hardware weights are combined into a total system weight for evaluation of the impact on stage and vehicle payload. System reliability is evaluated on the basis of system complexity, number of failure modes, and number of hardware components and their reliability record. Cost differences may become significant if the system requires the development of new components or if the gas is expensive.

To arrive at a final decision on system type, critical factors (usually weight, reliability, and cost) must be weighed in relation to the specific program application. Weight may be the

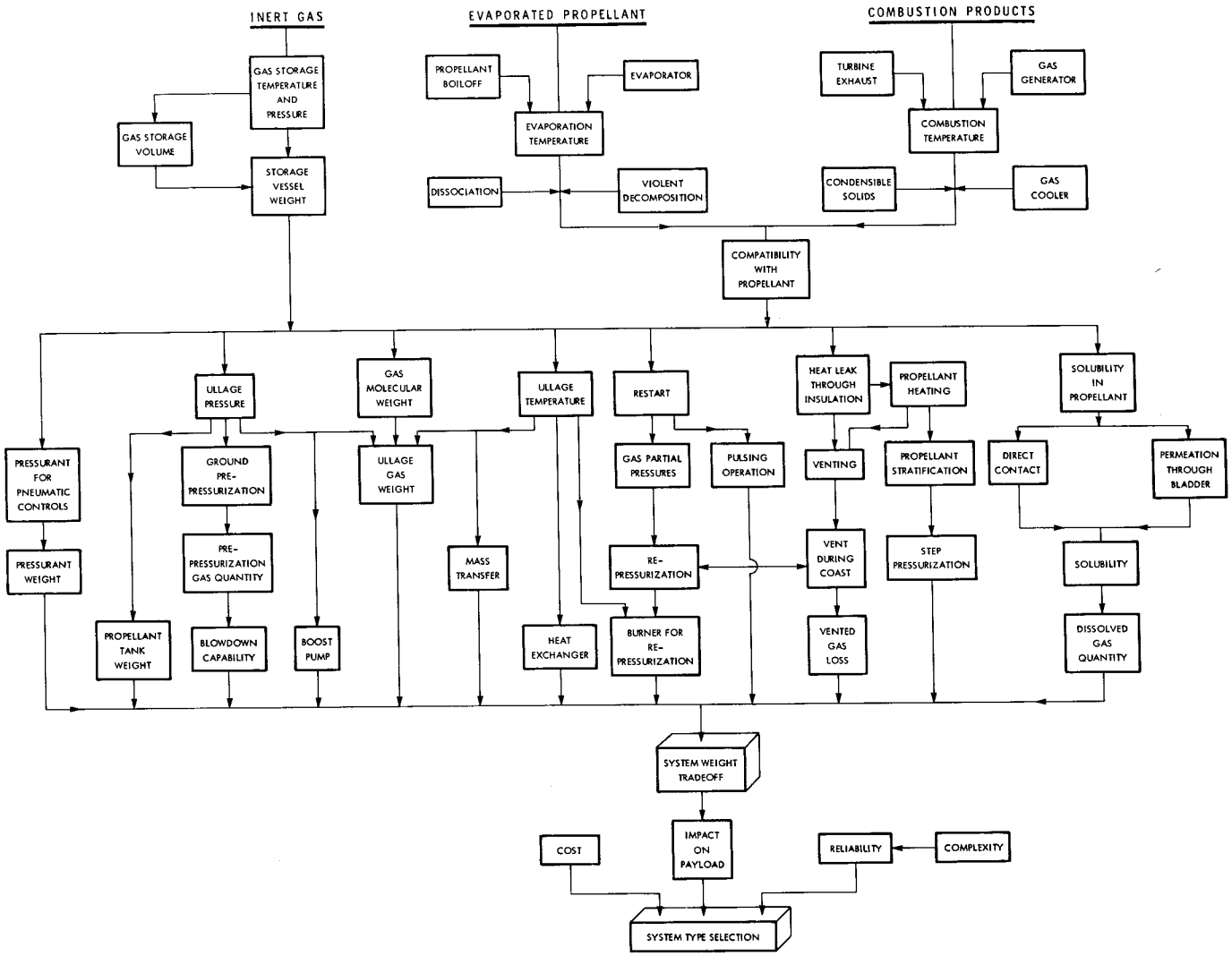


Figure 5. - Relation of factors that influence selection of a pressurization system.

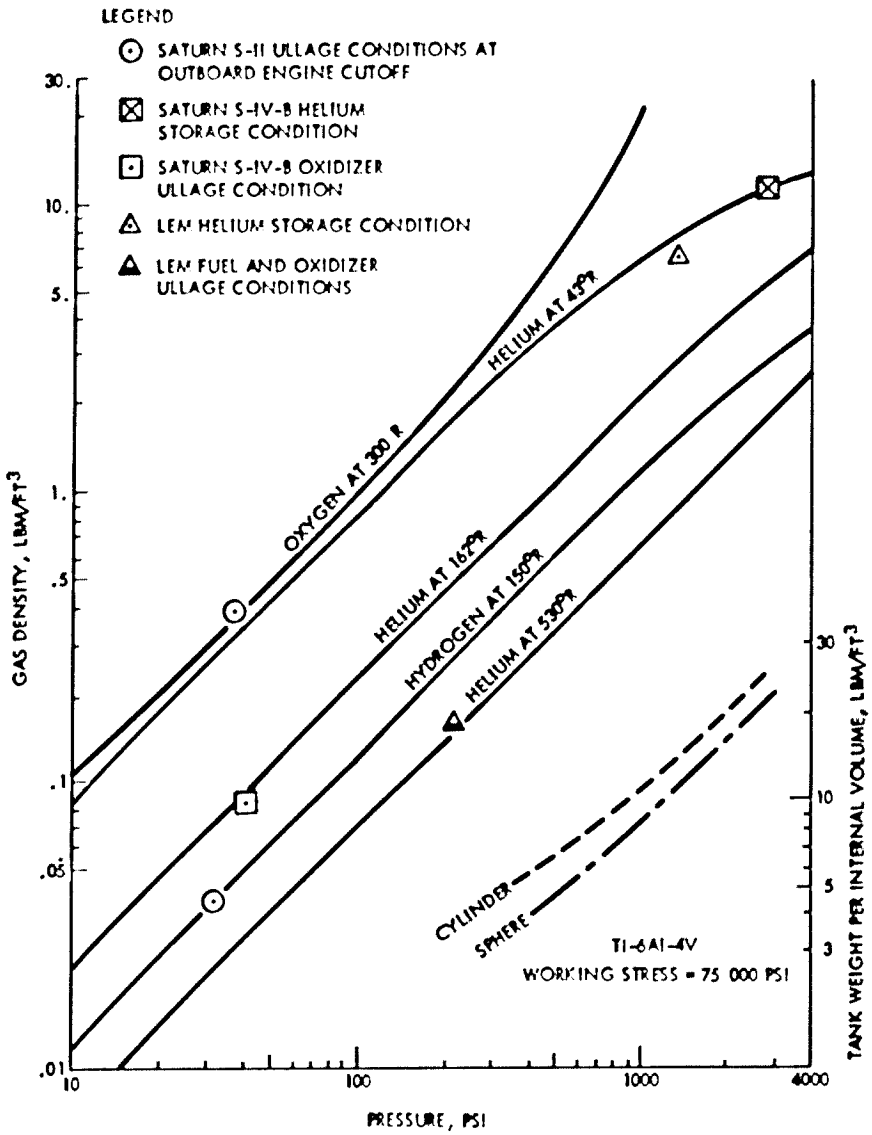


Figure 6. - Variation of pressurant-gas density with storage and ullage conditions, and variation of storage-tank weight with tank shape and storage pressure.

driving factor for payload-critical final stages, but reliability may be of prime importance in another situation. Table IX illustrates the weight tradeoff for pressurizing the liquid-oxygen tank in a pump-fed propulsion system for a large stage. In this application, the pressurant can be either stored helium gas or gaseous oxygen made available by an evaporated-propellant system with engined-supplied heat exchangers. As shown in the table, the minimum overall system weight can be achieved only if the helium is stored at 43°R. This condition requires accepting the complexity of high-pressure helium-storage spheres located inside the liquid-hydrogen tank. The final decision was made on the basis of mission payload implications versus reliability requirements. The system involving helium stored in the hydrogen tank was rejected for the S-II but accepted for use in the S-IVB. The key factor involved in the S-IVB decision was the coast period (ref. 22). During coast, significant amounts of gaseous oxygen pressurant would be condensed into the liquid propellant and ullage pressure would decay, whereas the helium pressurant would continue to maintain the tank ullage pressure.

The techniques used to generate the actual numerical values for weight tradeoff studies vary according to the accuracy required in the results. For fairly gross comparisions, curves of the type shown in figure 6 are used. Average ullage temperatures for these cases are estimated on the basis of experience with similar systems. Tank working-stress levels are adjusted for improved material properties if gas is stored at cryogenic temperatures.

**Table IX. – Comparative Weights for Evaporated Oxygen and for Stored Helium as Pressurants of S-II Oxidizer Tank[a]**

| Parameter | Evaporated oxygen | Stored helium[b] | |
|---|---|---|---|
| Pressurant molecular weight, lbm/lbm-mole | 32 | 4 | |
| Total weight of gas, lbm | 5000 | 1000 | |
| Storage density, lbm/ft$^3$ | 71.5 (liquid, 161°R) | 1.95 (530°R) | 12.0 (43°R) |
| Storage volume, ft$^3$ | 65 | 344 | 56 |
| Storage tank weight, lbm | Not applicable | 7000 | 1000 |
| Total weight, lbm | 5000 | 8000 | 2000 |

[a]Ullage pressure = 40 psi

[b]Storage pressure = 3000 psi

### 2.1.2.1 INERT-GAS SYSTEM

Current inert-gas pressurization systems generally use helium or nitrogen as the pressurant (tables I, II, and III). Helium usually is preferred to nitrogen or other pressurants because its low molecular weight gives a system-weight advantage. Also, helium condenses at a lower temperature (9.4°R) than any other pressurant, an important factor that affects the amount of residual pressurant mass remaining after the gas is expelled from the storage bottle or after the expansion process in an ullage blowdown system*. In addition, the thermodynamic properties of helium result in a smaller pressure rise than that occurring with nitrogen during lockup periods in the mission duty cycle.

When an inert-gas pressurant is in intimate contact with the propellant, the ullage space includes both the inert pressurant and a quantity of evaporated propellant. This condition exists because the propellant will allow a stable condition only when the correct pressure of its own vapor exists above the liquid level at the propellant surface temperatures involved. Therefore, the partial pressure of each species (inert pressurant and propellant vapor) and concentration gradient may vary during the flight depending on the temperature of the propellant surface layer, the gas solubility in the propellant, and the ullage-gas venting loss. These factors are particularly important in calculating pressurant mass requirements for applications involving propellants with high vapor pressures.

Inert-gas systems have ranged from simple blowdown systems with no temperature conditioning to elaborate storage-vessel systems with multiple heat exchangers. The more elaborate designs generally are pursued with the goal of reducing the required amount of pressurant as well as the volume and weight of associated storage vessels. For example, in several successful cryogenic-propellant propulsion systems, available conditions were utilized for storing the helium at as low a temperature as possible, thereby maximizing the storage density; the helium was then heated to expand it for use as a pressurant. In the Saturn S-IC system, helium was stored in bottles located in the LOX tank; subsequently, the helium was heated in an engine-mounted turbine-exhaust heat exchanger for fuel (RP-1)-tank mainstage pressurization. In the Saturn S-IVB system, even lower storage temperatures were achieved by locating the helium bottles within the $LH_2$ tank. The helium was heated in an engine-mounted turbine-exhaust heat exchanger before use as the mainstage pressurant for the LOX tank. A separate $O_2/H_2$ burner was used to heat the cold helium for repressurization of both LOX and $LH_2$ tanks.

Inert-gas blowdown-mode pressurization system. – This system has been used almost exclusively with monopropellant propulsion systems simply because the resulting thrust and specific impulse of a bipropellant engine with a blowdown-mode pressurization system have

*A blowdown system is one in which the ullage space is charged with a fixed mass and pressure of inert gas. No pressurant gas is added, and the ullage pressure decays as propellant is consumed until the pressure reaches a predetermined minimum value at the end of motor operation. The ratio of initial to final pressure is the "blowdown ratio."

not been sufficiently predictable to satisfy the vehicle reliability and performance requirements. An example of a relatively simple pressure-fed monopropellant propulsion system incorporating a blowdown system is the Earth Resources Technology Satellite (ERTS) Orbit-Adjust Subsystem (OAS) shown schematically on Figure 7 (ref. 19).

The function of the ERTS OAS is to correct for minor orbital irregularities during the lifetime of the spacecraft. The OAS utilizes a hydrazine propellant tank with a bladder and a nitrogen-gas 5:1 blowdown-mode pressurization system. The pressurant is not thermally conditioned. The subsystem is designed to deliver 14 600 lbf-sec of total impulse through its three variable thrust (0.815 to 0.22 lbf) engines with the propellant tank in the fully loaded condition (67 lbm of $N_2H_4$) and the ullage gas initially at 540 psi (ref. 23). Although simple, the ERTS OAS design emphasized redundancy. In addition to redundant seals for test and instrumentation ports within the pressurization and propellant feed systems, the propellant feed system incorporated redundant shutoff valves, filters, and engine valves.

Stored-inert-gas pressurization system. – This system has been used widely and successfully, particularly in vehicles with bipropellant propulsion systems. In some vehicles, the system is used for the oxidizer tank only (e.g., Saturn S-IV and S-IVB); in some, for the fuel tank only (e.g., Saturn S-IB and S-IC, Thor); and in some, for both oxidizer and fuel tanks (e.g., Agena, Atlas, Apollo LEM descent stage, Apollo SPS, Delta, Lunar Orbiter VCS, Titan II-Transtage).

A key parameter in the design of this system is pressurant-gas temperature (hence gas density and pressure) in both storage and ullage conditions (refer to fig. 6). Thermal conditioning (i.e., heating or cooling or both) of the gas can lead to compact, low-weight systems. For some applications, however, the complexity and cost associated with thermal conditioning of the gas may not be warranted. A successful system that did not thermally condition the stored gas was the Lunar Orbiter VCS. In contrast, in the descent stage of the Apollo LEM, the helium pressurant was stored under supercritical conditions and then heated; this system achieved a weight savings of 60% over that of ambient-temperature high-pressure storage without thermal conditioning. These two systems are discussed in detail below.

The Lunar Orbiter VCS was designed such that the $N_2O_4$/A-50 propulsion system (100 lbf thrust) could impart a velocity change of as much as 3215 ft/sec to the 850-lbm spacecraft for midcourse corrections, initial lunar-orbit injection, and photographic-orbit injection (ref. 24). As shown in Figure 8 (ref. 24), the ullage-gas source was a nitrogen-gas storage sphere with no provision for conditioning gas temperature. The sphere was made of Ti-6Al-4V alloy, weighed approximately 21.8 lbm, and had an internal volume of 1579 in.$^3$. A nitrogen-gas mass of 14.74 lbm was loaded into the sphere at 3500 psi and 530°R. Parallel-redundant normally-closed squib valves isolated the pressurant in the storage vessel from the rest of the system until first use of the gas was required. Note that the pressurant in the storage vessel also was the gas source for the cold-gas reaction control system (RCS).

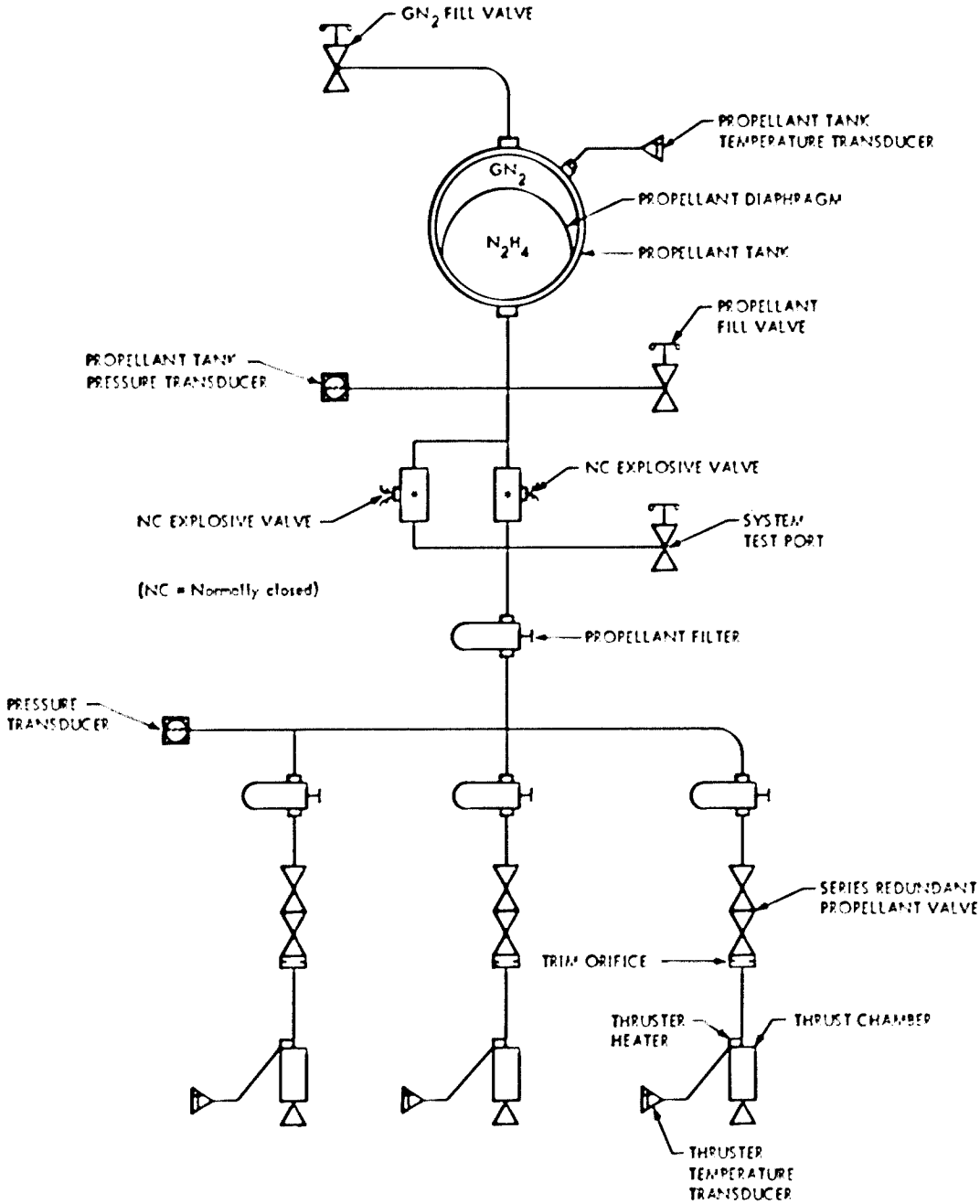


Figure 7. - Schematic of the orbit-adjust subsystem on the Earth Resources Technology Satellite (adptd. from ref. 19).

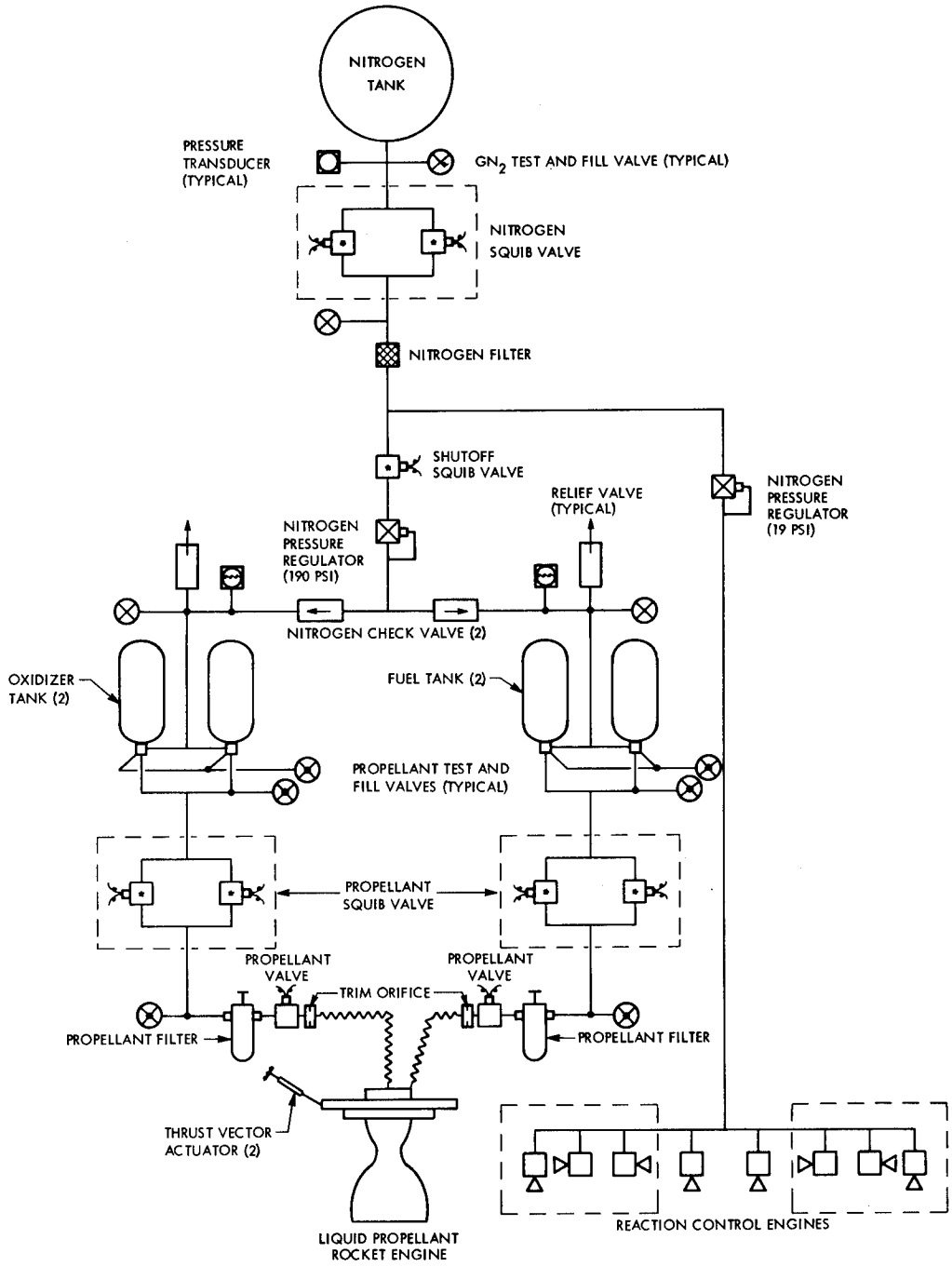


Figure 8. - Schematic of the velocity control and reaction control subsystems on Lunar Orbiter spacecraft (ref. 24).

Of the 21.8 lbm in the storage vessel, only 2 to 3 lbm were used to pressurize and maintain the pressure in the VCS propellant tanks; the remaining gas was used for the RCS and for pressurant reserve. When the squib valves were opened, the pressurant flowed through a normally-open shutoff squib valve to the VCS pressure regulator, which reduced the gas pressure to 190 psi. Subsequently, the gas was routed through the check valves and into the oxidizer and fuel tanks. In the VCS, a single regulator was used to pressurize both propellant tanks in order to preclude undesired in-flight shifts of propellant mixture ratio; such shifts could occur if each tank had its own pressure regulator and the regulator setpoint of one changed during flight. With a single regulator, the setpoint could still change, but each tank would have the same ullage pressure. Although each tank had a bladder, check valves were used to isolate the ullage gases of the fuel and oxidizer tanks. If any propellant vapor permeated its bladder, the check valves prevented the vapor from entering the other system. After the VCS completed its function, the normally-open shutoff squib valve was positioned closed, thus isolating the VCS regulator and tankage from the gas in the storage vessel. Note that each ullage has a pressure relief system to prevent overpressurization of the system.

During the 28 engine firings in five different missions, only two internal leakage problems within the VCS pressurization system occurred. The first was excessive lockup leakage through the pressure regulator subsequent to the injection maneuver in the first mission. This leakage was presumed to be caused by contamination of the regulator seat; the leakage was stopped by closure of the shutoff squib valve following the orbit-transfer maneuver. The second leakage, observed on several later missions, was caused by the failure of the shutoff squib valve to close completely. However, normal operation of the VCS pressure regulator prevented the propellant tank pressure from increasing significantly above the regulator lockup pressure (ref. 24).

In the descent stage for the Apollo LEM, a vacuum-jacketed (double-walled), Mylar-insulated, high-pressure container was used to store 48.5 lbm of supercritical helium for the pressurization system (shown schematically in figure 9). The helium tank was loaded with liquid helium at 8°R and topped with high-pressure helium gas that increased the system temperature to approximately 11-12°R. During the 131-hour (maximum) standby time period, the helium pressure and temperature were increased by incoming heat leak. The maximum temperature the helium reached prior to outflow was 50°R while the rate of pressure rise was 5 to 10 psi/hr (ref. 25).

Initially, the helium fluid, at a maximum flowrate of 5.3 lbm/hr, passes through the first loop of the external two-pass fuel-to-helium heat exchanger, where it absorbs heat from the fuel. The helium is warmed and routed back through the internal helium-to-helium heat exchanger inside the pressure vessel. The warm helium transfers heat to the remaining supercritical helium in the pressure vessel and causes an increase in pressure; thus continuous expulsion of helium is ensured throughout the period of operation. After the helium passes through the internal helium-to-helium heat exchanger, where it is cooled, it is routed back through the second loop of the fuel-to-helium heat exchanger and is heated to

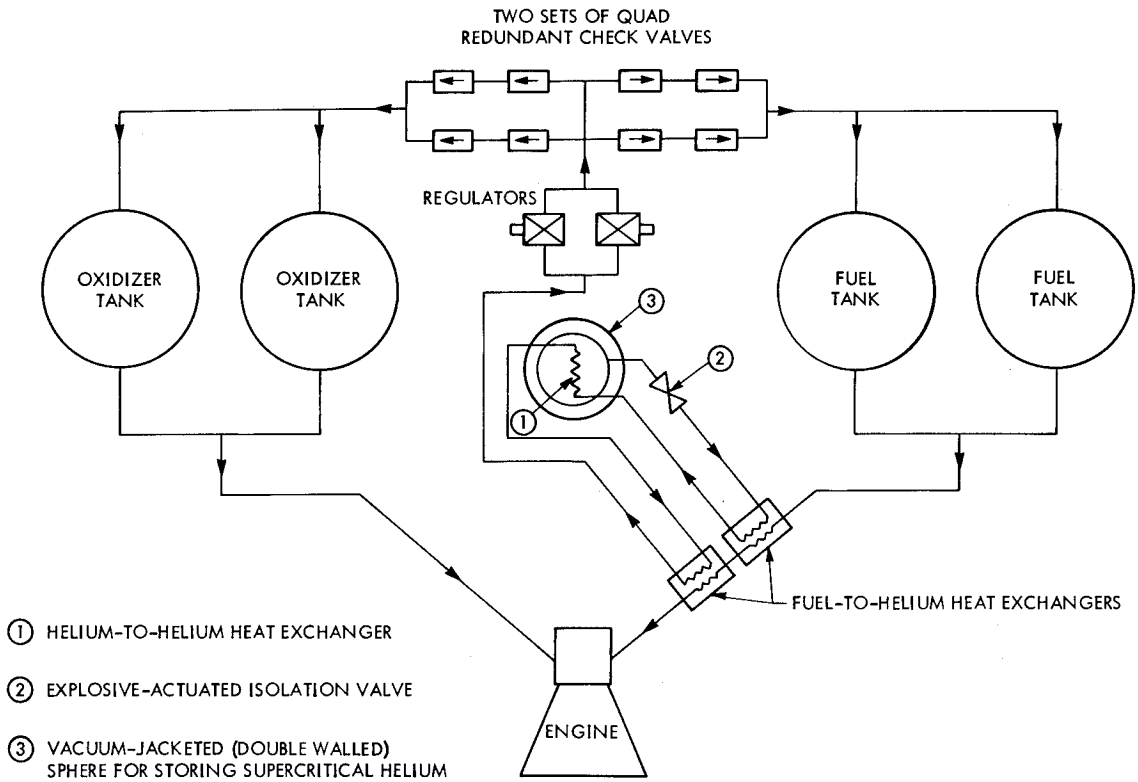


Figure 9. - Schematic of the pressurization system for the Apollo LEM descent stage.

approximately 500°R before being delivered as the pressurizing agent for the propulsion-system fuel and oxidizer tanks (ref. 25). The use of a supercritical-helium storage tank and passive control configuration on the Apollo LEM descent stage minimized the number of components required and thus achieved a high degree of reliability. In addition, as noted, in comparison with an ambient-temperature high-pressure storage vessel, a weight saving of some 60 percent resulted from the smaller size high-pressure vessel used for cryogenic storage.

### 2.1.2.2 EVAPORATED-PROPELLANT SYSTEM

Evaporated-propellant pressurization systems have been used almost exclusively for large vehicles with pump-fed propulsion systems (table I). The use has been limited mainly to oxidizers because of the tendency of most fuels to boil violently under heating; hydrogen, a fuel, is an exception to this phenomenon. Because of the relatively high molecular weight of the oxidizer vapor, evaporated-propellant systems for oxidizer tanks require more pressurant mass generally than comparable inert-gas (helium) systems. The adverse effect of this higher pressurant mass is effectively minimized, however, because these systems essentially eliminate storage-vessel weight by storing the pressurant as a liquid in the main propellant tanks.

The simplest form of evaporated-propellant pressurization is self-pressurization (flash boiling) in the propellant tank during feedout. This system generally requires a propellant with a high vapor pressure, and the resulting pressure is very much dependent on the mission profile. The system is reliable, although the pressurant mass requirements are high because of low pressurant temperatures and hence high densities. Additionally, prepressurization from a separate system may be necessary to meet engine start requirements (e.g., the Centaur vehicle).

More favorable gas-mass conditions exist in the ullage when (1) the pressurant is heated to a maximum temperature consistent with structural and propellant requirements and (2) the ullage-gas temperature is stratified (sec. 2.3.1.2). In the Saturn S-II stage, which incorporates evaporated-propellant pressurization in both oxidizer and fuel systems, propellant vapor is superheated to minimize the gas mass required. For mainstage pressurization, the S-II oxidizer tank is pressurized with relatively warm gaseous oxygen (495 ± 15°R at maximum MR; 450 ± 15°R at low MR). As shown in figure 10 the oxygen pressurant is obtained by extracting a portion of the LOX (temperature approximately 169°R) leaving the pump discharge area and routing the fluid through a shell-and-tube heat exchanger. The turbine outlet gas provides the heat source (1076 ± 54°R at maximum MR; 986 ± 63°R at low MR) for the heat exchanger. Within the heat exchanger, the LOX is vaporized and subsequently routed into a collector. From there, the gas is routed into the oxygen tank ullage through a flow restrictor and gas distributor.

The S-II fuel tank is pressurized with hydrogen gas extracted from the engine thrust-chamber cooling jacket, where the fluid is used as a coolant (fig. 10). The temperature of the hydrogen pressurant ranges from 200° ± 20°R at maximum MR to 130° ± 30°R at low MR. The hydrogen pressurant is collected from the four outboard engines and is routed to the ullage via the hydrogen-tank flow-control orifice and gas distributor.

In evaporated-propellant pressurization systems, attention must be given to ullage-pressure decay before and during the engine start transient. Decay can result from condensation of the ullage gas due to heat transfer to the propellant or to the structure prior to engine firing

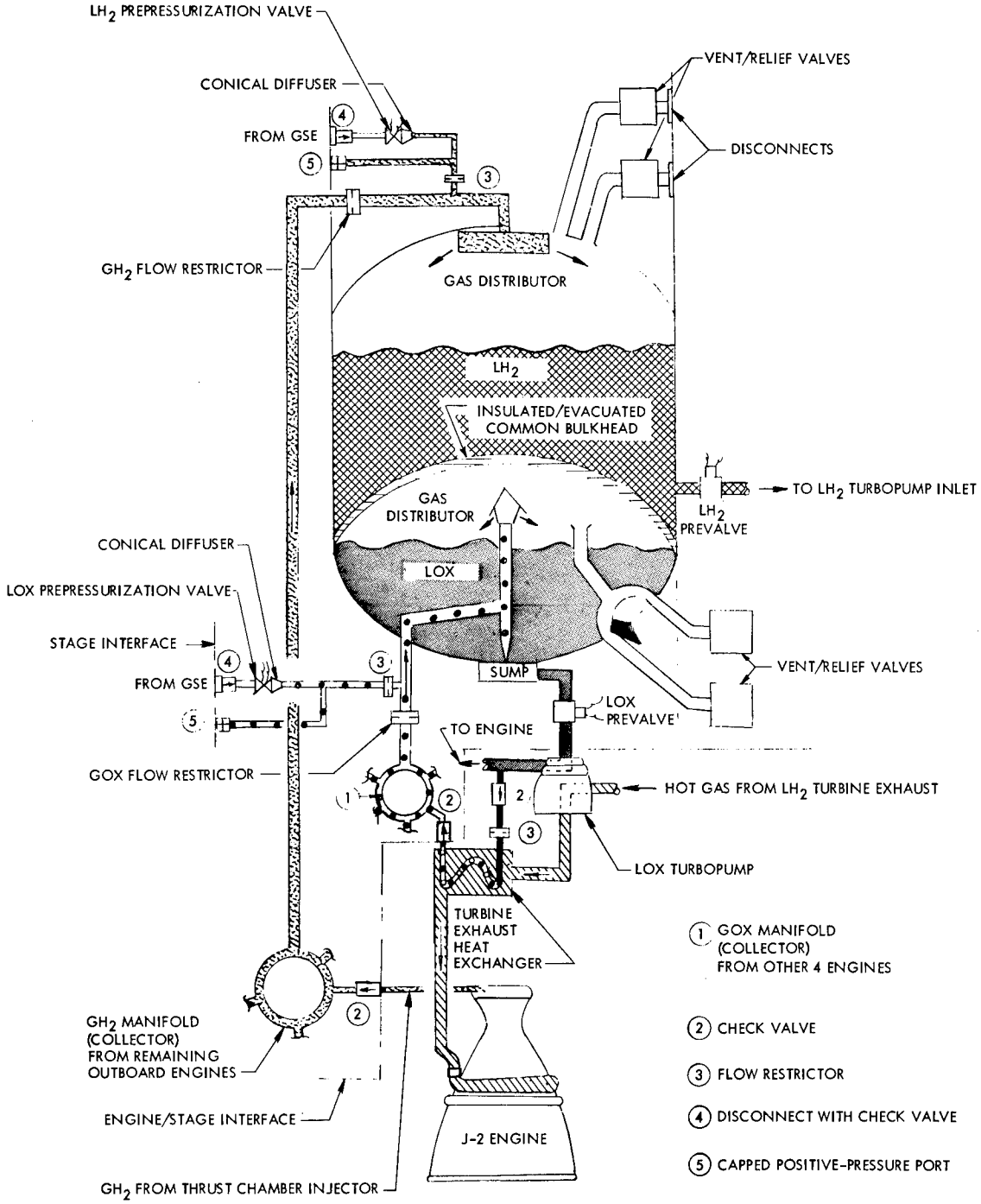


Figure 10. - Schematic of the evaporated-propellant pressurization system for the fuel and oxidizer tanks of the Saturn S-II stage.

or from propellant expulsion prior to pressurization system response during the start transient. Cold-helium prepressurization from a ground source before liftoff has been used on all upper stages to reduce the total ullage-pressure decay prior to engine firing. During early development of the Saturn S-II, a helium-gas storage system was included in each of the two propellant-tank flight-pressurization systems to prevent ullage-pressure decay below the permissible engine prestart limits. However, ground tests demonstrated that these storage systems were not required, and they were deleted in flight vehicles.

### 2.1.2.3 COMBUSTION-PRODUCTS SYSTEM

As noted, combustion-products pressurization systems have been used for a few applications such as the Titan fuel tanks and several military vehicles; however, this system has been of limited use because the pressurant obtained often is chemically incompatible with the propellant, is too high in temperature, or has condensible elements.

The combustion-products pressurization system used on the Titan vehicles is shown schematically in figure 11. In this system, an $N_2O_4$/A-50 gas generator produces fuel-rich exhaust gases for engine turbopump operation. The gas-generator combustion temperature is approximately 2260°R at a mixture ratio of 0.085 (fuel rich); the turbine outlet temperature is approximately 2130°R. Gas for tank pressurization is tapped off at the turbine outlet, passed through a gas cooler, and then routed to the fuel tank. The pressurant injected into the fuel tank is within a temperature range of 650° to 750°R. Flow is controlled by a flow-control nozzle located downstream of the gas cooler.

Separate gas generators for pressurization purposes only utilize liquid or gaseous propellants to produce hot-gas pressurant. These systems are simple, reliable, and relatively easy to control while providing gases at predictable temperature. The system can utilize a monopropellant or bipropellants. Monopropellants such as hydrogen peroxide ($H_2O_2$) and hydrazine ($N_2H_4$) yield an extremely simple generator system and do not require mixture-ratio adjustments. Bipropellant systems employing liquid chlorine trifluoride and a solid grain of sodium azide can produce heated nitrogen for pressurization. The exhaust gases also contain other constituents, but these are effectively eliminated by filters (ref. 26). The main disadvantage of these systems is the need to carry additional propellants onboard; these propellants usually require special handling and tankage.

Solid-propellant gas generators for pressurization purposes are highly efficient devices that produce gas by deflagration of solid propellant. The Lance and several other military vehicles utilize this method of pressurization. The gas produced can be precisely controlled in rate of production, amount of pressure, and range of temperature. The solid-propellant gas generators have no moving parts, are relatively insensitive to acceleration, vibration, or other mechanical phenomena, and may be electrically or mechanically initiated. Problems include modulating control of the burning process, system reliability, and system weight for large propellant tanks.

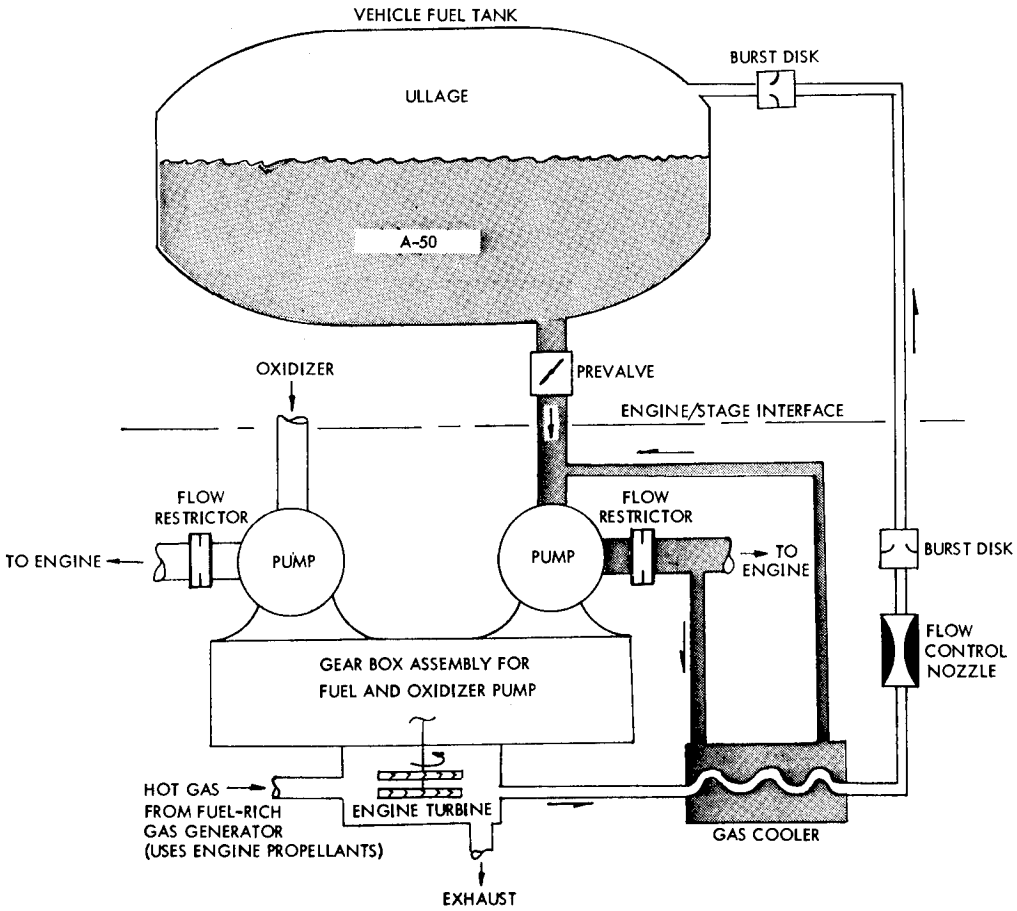


Figure 11. - Schematic of combustion-products pressurization system for the fuel tanks of Titan stages 1 and 2.

Main tank injection (MTI) is one of several combustion-products systems that have been investigated in recent years but never used on a flight vehicle. In the MTI system, a hypergolic reagent is injected into the propellant to produce a chemical reaction that generates hot gases for pressurizing the propellant tank. This concept is applicable to most propellants if the reagent and additives are selected to provide immediate reaction with the propellant. MTI systems have been demonstrated by testing; however, several problems remain to be resolved (e.g., transient operation, operating over a realistic reagent range, propellant inlet conditions, uniform impingement over wide ranges of propellant levels). Information on MTI is contained in references 7 and 27 through 30.

## 2.1.3 Initial System Design

### 2.1.3.1 PRESSURANT-GAS EVALUATION

A number of thermal and physical properties of the pressurant gas are pertinent to the design and operation of a pressurization system. Two of these properties have already been discussed (sec. 2.1.1.2). The other properties that must be considered in initial design may be summarized as follows:

- Chemical compatibility
- Density/Compressibility factor
- Solubility
- Permeativity
- Viscosity
- Thermal conductivity/Joule-Thomson coefficient
- Cleanliness/Dryness

Chemical compatibility. – Pressurant/propellant compatibility ranks as the major "go/no go" item for pressurant selection. As shown in table X (adptd. from refs. 10 and 31), the inert gases such as argon, helium, and neon are compatible with all common propellants. Evaporated propellants (vapors) are completely compatible with their liquid phases. These compatibility characteristics have been important factors in the selection of pressurants for operational systems. In addition to pressurant chemical compatibility with propellants, chemical compatibility of the fluid with system hardware enters into the design problem. Compatibility problems with liquid and gaseous oxygen, for example, widely used as oxidizers, are presented in reference 32.

Table X. — Compatibility of Representative Pressurants With Common Propellants (adptd. from refs. 10 and 31)

| Propellant | Pressurant | | | | | | | | |
|---|---|---|---|---|---|---|---|---|---|
| | Air | Ammonia | Argon | Helium | Hydrogen | Neon | Nitrogen | $N_2O_4$ | Oxygen |
| A-50 | I | C | C | C | C | C | C | I | I |
| Liquid $N_2O_4$ | C | I | C | C | I | C | C | C | C |
| RP-1 | I | C | C | C | – | C | C | I | I |
| UDMH | – | – | C | C | – | C | C | I | I |
| Hydrazine | I | I | C | C | I | C | C | I | I |
| Liquid hydrogen | I | COND | COND | C | C | COND | COND | I | I |
| Liquid oxygen | COND | I | C | C | I | C | COND | COND | COND |
| Fuming nitric acid | I | – | C | C | – | C | C | I | I |
| Hydrogen peroxide | C | I | C | C | I | C | C | – | – |
| Liquid ammonia | I | C | C | C | – | C | C | I | I |
| Fluorine | I | I | COND | C | I | C | – | I | I |

I = incompatible C = compatible – = no data available
COND = chemical compatibility not a problem, but normal propellant liquid temperatures will induce excessive pressurant condensation

Evaluation of the use of products of combustion as pressurants (sec. 2.1.2.3) has covered gases generated from the catalytic decomposition of hydrazine and other monopropellants as well as combustion gases from either separate gas generators or main tank injection. However, none of these pressurants has appeared to be attractive enough to gain wide application, largely because of the compatibility problems involved. Almost all generated gases are produced at high temperatures that are beyond the safety limits of most propellants or even of the tank materials. For space vehicle applications, the generated gases would have to be cooled before they could be introduced into the tank. Additional problems include possible contamination of the propellant by the condensible species, and chemical reactions of propellant vapor with the reactive components in the generated gases.

Density/Compressibility factor. – The density of an ideal gas is a function of its molecular weight, temperature, and pressure, as shown by the equation

$$\rho_{id} = \frac{144\ P \times MW}{RT} \tag{6}$$

where

$\rho_{id}$ = ideal-gas density, lbm/ft$^3$

P = gas pressure, psi

MW = molecular weight, lbm/lbm-mole

R = universal gas constant, 1545.5 ft-lbf/(lbm-mole-°R)

T = absolute temperature, °R

The ratio of $\rho_{id}$ to real-gas density $\rho_{re}$ is the compressibility factor Z (ref. 33):

$$Z = \rho_{id}/\rho_{re} \tag{7}$$

Real-gas density can be obtained from thermodynamic data (ref. 9 or 34), or it may be calculated from the following equation if Z is known:

$$\rho_{re} = \frac{144\ P \times MW}{RTZ} \tag{8}$$

This equation shows that, for a given temperature and pressure, the gas density is equivalent to MW/Z.

The various pressurants available represent a wide range of densities and thus a considerable apparent variation in pressurization-system weight. Helium has been used extensively as a pressurant not only because it is compatible with all propellants but also because it is generally the lightest gas at any given ullage pressure and temperature. However, the weight advantage of any gas becomes less pronounced when the tradeoff includes the hardware weight and system complexity sometimes involved in switching to a system involving a pressurant with a lower MW/Z (sec. 2.1.2).

The pressurant temperature both in the operating ullage and in any storage spheres frequently is used in system design as a means of affecting the density of whatever gas is being used as pressurant. The compressibility factor affects the weight of a stored-gas pressurization system. A $Z > 1$ at high pressure produces an initial gas density lower than ideal in the storage vessel; and a $Z < 1$ in the region of low pressure and temperature sometimes occurring in nearly discharged pressurant vessels results in higher density of the residual gas remaining in the vessel after expansion. In the broad sense, the goal is to operate with the highest possible gas temperatures in the ullage while maintaining the gas storage tanks (if any) at a minimum temperature until late in the final withdrawal period. For some systems, it is desirable to minimize the residual gas mass in the storage vessel. In the Able-Star stage, the gas was heated toward the end of its final withdrawal cycle. This action resulted in minimum required weight of pressurant as well as minimum weight and volume of the storage tanks. In actual application, the achievement of this goal is tempered by the mission practical limits and the characteristics of the particular propulsion system.

In pump-fed propulsion systems, a turbine-exhaust heat exchanger frequently is used for evaporating propellant or for heating a stored inert pressurant. Subsequently, the pressurant gas is introduced into the tank ullage at temperatures significantly higher than the propellant bulk temperature. The pressurant assumes a stratified temperature distribution (sec. 2.3.1.2) during relatively short powered flight, and the average temperature in the ullage remains effectively high. In many instances involving stored inert gas and a tank for cryogenic propellant, the storage volume and weight can be minimized by locating the storage spheres inside the propellant tank; for example, the helium storage spheres for the S-IVB stage are located in the liquid-hydrogen tank. The Atlas vehicle employs externally mounted storage spheres that are chilled with a liquid-nitrogen bath prior to launch (ref. 35).

In pressure-fed propulsion systems, usually spacecraft with earth-storable propellants, the mission durations usually are long, and the pressurization system generally is stabilized to the spacecraft ambient temperature.

The designer's latitude in setting pressure levels in the ullage space generally is limited by overall propulsion-system considerations. He does have somewhat more latitude in setting pressure levels for gas-storage vessels, but even here he is constrained. The objective in using very high storage pressures is to reduce the volume occupied by the storage vessels. In

practical applications, however, the accompanying increase in storage-vessel weight and the resistance of real gases to compression at very high pressures usually result in the design storage pressure being set at about 3000 psi.

Solubility. – Dissolved gases have an adverse effect on engine performance (sec. 2.3.2.2); hence, gas solubility is an important concern in the pressurant selection. The solubility generally is affected by temperature and pressure. Because of the higher ullage pressures and generally longer exposure times, pressure-fed propulsion systems are particularly susceptible to problems due to gas dissolved in propellants. However, the problem of gas solubility has been reduced considerably on spacecraft with the use of positive propellant-expulsion devices such as bladders or bellows. By their very nature, the positive-expulsion devices separate the pressurant from the propellant and consequently limit the amount of dissolved gas.

For pressurization-system design, a useful expression of gas solubility is the ratio of the mass of the gas dissolved in the propellant to the mass of propellant. For pressurant/propellant combinations with low solubilities, Henry's law is applicable, and the solubility is proportional to the partial pressure of the gas (ref. 36):

$$C = Kp \tag{9}$$

where

$C$ = concentration of dissolved gas, lbm of pressurant per lbm of propellant

$K$ = Henry's constant, lbm of pressurant per lbm of propellant-psi

$p$ = gas partial pressure, psi

The theory of gas solubility, its application, and selected data can be found in the literature (e.g., refs. 7, 8, 36, 37, and 38).

Nitrogen gas as used for prepressurization in both stages of the Titan II and III vehicles (ref. 13) and in the Thor booster (ref. 39) illustrates the significance of gas solubility. Nitrogen solubility in the Titan earth-storable propellants, including $N_2O_4$, is low at the level of tank pressure for pump-fed propulsion systems. On the other hand, nitrogen gas is extremely soluble even at low pressures in liquid oxygen (LOX), which is used in the Thor booster. Hence, the surface layer of LOX in the Thor tank will contain a high concentration of nitrogen. The absorption rate or penetration of nitrogen into the liquid depends on the surface agitation, among other factors. Therefore, prelaunch slosh and launch vibrations in Thor greatly influence the quantity of nitrogen gas required for prepressurization.

Permeativity. – At the present time, the terminology used to describe quantitatively the phenomenon of permeation – the diffusion of gas through a penetrable barrier (membrane, porous metal, etc.) – is imprecise. Data compilations in the literature (e.g., ref. 40) give "permeability coefficients", which express the relative resistance of a given barrier to passage of a specific gas. In this monograph, however, we are concerned with the ability of the gas to permeate the porous medium, and shall therefore use the term "permeativity" as describing the property of the gas. Note that either term (permeability or permeativity) relates to the specific gas/barrier combination rather than exclusively to the gas or to the porous medium.

In propellant tanks with polymeric or elastomeric positive-expulsion bladders, the pressurant will permeate the bladder and form free gas bubbles on the propellant side of the bladder. Susbsequently, these gas bubbles can be absorbed by the propellant and cause the engine performance problems described in section 2.3.2.2. However, within a given time period, the amount of pressurant absorbed by the propellant from the ullage of a tank with a bladder is much less than that absorbed from the ullage of a tank without a bladder.

Helium and nitrogen gases are two of the more common pressurants used in propellant tanks with bladders. Helium typically will permeate a given material to a greater extent than nitrogen gas. For example, the permeativity of helium gas through Teflon is $9.5 \times 10^{-10}$ lbm-mole per in.$^2$-hr-psi, whereas the permeativity of nitrogen gas through the same material is $0.52 \times 10^{-10}$ lbm-mole per in.$^2$-hr-psi. When gases such as helium must be used for systems requiring long-term storage, devices that desorb gas from fluid (e.g., bubble-retention screens) are sometimes provided in tanks with bladders in order to minimize the gas problem (ref. 3, 17, and 41).

Viscosity. – Gas viscosity greatly affects the rate of gas leakage through small holes (pores) in tank walls and welded joints. Because of its high acoustic velocity, low molecular weight, and low viscosity, helium gas tends to flow much more readily through a pore than do other popular pressurants. Consequently, as a pressurant for a long-term mission nitrogen gas has been favored over helium, although this selection results in more gas mass being required.

Leakage rates that initially are high enough to be in the turbulent flow regime as determined by the Reynolds number (i.e., $Re > 2000$) are too high to be tolerable in any case (ref. 40). However, if the Reynolds number is calculated to be in the laminar flow regime ($Re < 1000$), the leakage rate is predominately a function of viscosity rather than of molecular weight and acoustic velocity. In this flow regime, the volumetric leakage rates of helium and nitrogen are not much different; with current advanced leak detection instrumentation and weld inspection techniques, helium leak rates as low as $1 \times 10^{-10}$ scc/sec can be detected. Gas leak rates that fall below the flow regime where the molecular size rather than viscosity governs are insignificant and negligible, even under long-term storage.

Thermal conductivity/Joule-Thomson effect. – The thermal conductivity of the pressurant gas has a significant influence on the design and performance of pressurant heat exchangers

(sec. 2.2.2.5) used on some large pump-fed propulsion systems. The pressurant-side convective-heat-transfer coefficient is an almost linear function of the gas thermal conductivity. Therefore, the heat-exchanger capacity and tube wall temperature are affected by the gas thermal conductivity. High thermal conductivity allows greater heat-exchanger capacity without incurring excessive tube wall temperature. Helium and gaseous hydrogen have thermal conductivities (0.082 and 0.1 Btu/hr-ft-°R, respectively, at 14.7 psi and 492°R) an order of magnitude higher than those of gaseous oxygen and nitrogen (ref. 42).

In stored-inert-gas systems, the blowdown process of the pressurant in the storage sphere and the additional gas cooling from frictional pressure loss and throttling as the gas is transferred from the storage tank to the ullage can result in the pressurant being introduced into the ullage at a relatively low temperature (sec. 2.3.1.2). Slow heat transfer from propellant and tank walls can then result in excessive ullage pressure rise during regulator lockup periods (e.g., during interorbital coast). This condition can lead to unseating of relief valves and wasteful venting of gas overboard. The higher the gas thermal conductivity, the closer the temperature remains to the equilibrium value during gas flow periods, with consequently less change remaining for the period after regulator lockup. Also, high thermal conductivity increases the heat transfer to the pressurant in the storage vessel, thus reducing the residual mass at the end of withdrawal. High thermal conductivity therefore is an advantage in stored-inert-gas systems.

The Joule-Thomson effect (the change in gas temperature with gas pressure as the gas expands through a throttling device) is often overlooked in choosing pressurants or estimating the gas outlet temperature. For example, nitrogen gas when subjected to a nearly isenthalpic throttling process (as in a pressure regulator) will drop in temperature. This lowering of the temperature produces a higher nitrogen-gas density in the ullage than might otherwise be anticipated and in addition could cause icing within the regulator if the gas is not dry. In contrast, when helium gas is throttled, the downstream gas temperature usually is warmer than or equal to the upstream temperature, the effect depending on the upstream pressure.

Cleanliness/Dryness. – If the gas is not clean and dry as required before being placed in service (ref. 43), contaminants such as dirt, hydrocarbon, and water can jam system mechanisms, clog filters and small flow restrictors, score system surfaces, or cause the pressurant to react unfavorably with the propellant (e.g., hydrocarbons react with liquid oxygen). Thus, gas cleanliness requirements (ref. 44) primarily are based on (1) permissible contamination levels in pressurization-system components, (2) gas chemical reactivity with the propellant, and (3) cost of cleaning the gas to remove contaminant that can accumulate from manufacture to point of usage.

The gas dewpoint is the temperature at which the water vapor in the pressurant will condense. If the water vapor does condense, this fluid can become entrained in the gas flow and cause unstable flow or malfunctions of system components. In addition, the moisture

can settle onto a surface and promote corrosion. These problems can be avoided by maintaining the gas temperature above its dewpoint. For example, in some pressure-regulated storage systems, the storage-vessel is maintained by a heating system at a temperature that precludes the pressurant from condensing within the pressure regulator or in other critical elements in the gas transfer system. A moisture content no greater than nine parts per million (ppm) by volume is typical of a pressurization system requirement for pressurant gas. This requirement corresponds to an approximate dewpoint of 382°R at 14.7 psi, 458°R at 2000 psi, or 471°R at 4000 psi.

### 2.1.3.2 DESIGN APPROXIMATIONS

In the initial system-design phase, quick approximations of the maximum allowable tank operating pressure levels, propellant tank volume, the pressurant mass, and the storage-vessel volume (if applicable) are often required so that structural designers and other members of the design team can commence their evaluation. Experience has shown that conservative estimates of these parameters are best, because if the preliminary values are acceptable, further refinement of the calculations and assumptions normally decreases the resulting overall system weight. Hand-calculation methods are presented in the literature (e.g., ref. 7); however, the guidelines and equations given below typically are employed in "first-cut" calculations.

Operating pressure levels. – Approximate levels are determined for both propellant tanks and gas-storage vessels.

Propellant-tank operating pressure is the sum of pressure resulting from propellant fluid head $P_{acc}$ and the ullage pressure $P_u$. Maximum design operating pressure is the (calculated) peak internal pressure to which the tank will be subjected at any time. The maximum permissible tank pressure usually is taken as approximately 1.1 times the maximum design operating pressure. For quick-cut approximations (cf. eq. (4)),

$$P_{acc} = \frac{4H_i \rho_p}{1728} \tag{10}$$

where

$H_i$ = initial fluid height in propellant tank, in.

4 = average value for load factor F/W

For pressure-fed systems

$P_u$ = maximum chamber pressure (11)

For pump-fed systems

$$P_u = \text{max. NPSH} \times \frac{\rho_p}{144} \tag{12}$$

For gas-storage vessels, the maximum permissible pressure is 1.1 times the maximum design storage pressure. Usually, the design storage pressure is obtained from tradeoff studies that aim at minimizing system overall weight (e.g., fig. 3). However, on the basis of experience, a maximum design storage pressure of 4000 psi is a realistic value that can be used in lieu of a value obtained from lengthy tradeoff studies.

Propellant tank volume. – The total propellant tank volume $V_t$ can be expressed as

$$V_t = V_p + V_u \tag{13}$$

where

$V_t$ = total volume of propellant tank, $ft^3$

$V_p$ = tank volume occupied by propellant, $ft^3$

$V_u$ = initial ullage volume at vehicle liftoff, $ft^3$

The ratio $V_u/V_t$ has varied from 0.01 to 0.25 for flight-proven liquid propulsion systems. Pressure-regulator response characteristics and changing propellant-mass requirements are among the major reasons for ratio variations. Ratios less than 0.07 are typical of most boosters, upper stages, and some pressure-regulated spacecraft. Ratios greater than 0.10 are typical of inert-gas blowdown pressurization systems because of the fixed pressurant supply and the design operating pressure band of the engine. For these systems, $V_u/V_t$ is equal to the ratio of the final pressurant density to initial pressurant density in the ullage. For first-cut approximations:

Boosters and upper stages: $$V_t \approx 1.08\, V_p \tag{13a}$$

Pressure-regulated spacecraft: $$V_t \approx 1.1\, V_p \tag{13b}$$

Blowdown systems with fixed pressurant mass: $$V_t \approx \frac{V_p}{\left[1 - \left(\frac{\rho_f}{\rho_i}\right)_u\right]} \tag{13c}$$

where $\rho_f$ and $\rho_i$ are the final and initial pressurant densities, respectively, in the ullage.

Total mass of ullage pressurant. – The required ullage-pressurant mass $M_u$ is calculated as the product of the propellant tank total volume $V_t$ and calculated final pressurant density $(\rho_f)_u$:

$$M_u = V_t \times (\rho_f)_u \tag{14}$$

For all pressurization systems except inert-gas blowdown, the predetermined minimum propellant temperature or tank surface temperature (whichever is less) and maximum design ullage operating pressure can be used to obtain the worst-case pressurant density in conjunction with available thermodynamic data. For inert-gas blowdown systems such as the ERTS orbit-adjust system and Mariner 10 (MVM '73), a conservative value for gas density is obtained when the ullage pressure corresponding to the minimum design chamber pressure at which the engine will function and the minimum propellant temperature or tank surface temperature are used. In all systems, factors that will decrease the required pressurant mass are (1) the amount of heat assumed to be transferred to the gas, (2) the ullage pressure at nominal (rather than maximum) level, and (3) the partial-pressure contribution from the propellant vapor to the ullage if the gas and propellant are in intimate contact.

Storage vessel volume. – The required storage vessel volume $V_{sv}$ can be expressed as

$$V_{sv} = \frac{M_u}{(\rho_i - \rho_f)_{sv}} \tag{15}$$

For a first cut, the initial gas density (eq. (6)) is assumed for a pressure lower than that anticipated, whereas the initial gas temperature is assumed to be ambient temperature (530°R) unless the gas is thermally conditioned. It may be noted that the assumption of an isentropic blowdown process for gas usage gives a smaller density difference than assumption of an isothermal blowdown process and thus yields a larger calculated vessel volume.

In more sophisticated studies, improved accuracy generally has been achieved in calculating pressurant mass. A well-known effort for establishing pressurant requirements for cryogenic propellants has been the computer program of reference 45, which was developed as a generalized program with particular applicability to the Saturn S-II stage. The program is rather long and complex, but its correlation with empirical data has produced dimensional-analysis techniques (refs. 46, 47, and 48) that have been applied to trade studies (ref. 22). Another generalized program that had its origins in reference 49 has been refined and improved through an extensive test program (refs. 50 through 57). A third computer program (ref. 58) is relatively uncomplicated and has been used for numerous trade-study calculations; although never used specifically for propellants other than

cryogens, the program is considered suitable for storable-propellant applications. An example of a computer program for storable propellants is the one used to analyze the Apollo SPS (ref. 59). In addition to these computer programs, there have been a number of programs developed for specific applications.

## 2.2 DETAIL DESIGN AND INTEGRATION

In the detail design and integration phase, the specific system selected and roughed out in preliminary design is further evaluated, emphasis being placed on hardware design features that are necessary for successful system design. The overall goal is to coordinate the fundamental considerations for performance, structural integrity, and fabrication into a complete and unified design. Typical major detail design tasks for the pressurization designer are to (1) establish the precise techniques to be used for control of ullage pressure and (2) integrate proper system components into a functioning overall design.

### 2.2.1 Pressure Control Systems

The pressurization system must provide for the precise control of ullage pressure that is critical in the operation of both pressure-fed and pump-fed propulsion systems. For regulated pressure-fed propulsion systems, the relatively constant ullage pressure permits the engine to produce a consistent thrust level, mixture ratio, and impulse for both pulsing and steady-state thruster firings. When vehicle maneuvers are required, thruster burn time is controlled to give the necessary changes in vehicle velocity. The accuracy of such maneuvers depends on repeatability of thrust and impulse levels.

In planetary spacecraft, the propellant tanks are prepressurized to required values, and the system is essentially locked up. Lockup could occur 30 days prior to mating with the spacecraft and subsequent launch. For noncryogenic propellants, little, if any, thermal conditioning is required to maintain ullage pressure. For spacecraft containing cryogenic propellants, a cooling-coil system usually is provided as part of the propellant management device to control the temperature of the cryogenic propellant. At the time of launch, the cooling system is deactivated, and the system depends on the thermal inertia of the cryogen to maintain ullage pressure at a safe limit. For this reason, the cryogenic tank usually is maintained at one atmosphere and is not pressurized prior to launch. This practice allows sufficient margin before the pressure reaches the safety valve operating pressure.

In blowdown pressure-fed propulsion systems, the ullage pressure is not regulated but decreases as the pressurant expands into the volume evacuated by the propellant outflow. Thus, the basic design consideration is to provide sufficient pressurant and tank ullage volume to ensure that the ullage pressure does not exceed the maximum allowable value at the beginning of the mission and does not drop below the minimum required value at the end of the mission. This consideration differs significantly between single- and multiple-burn missions because of thermodynamic influences on the pressurant.

In pump-fed propulsion systems, the function of the pressure controls is to maintain the desired tank ullage pressures during standby, propellant loading, ground hold, and powered flight in sequence established according to mission requirements and stage characteristics. For example, during standby, the maximum ullage pressure is dictated by the safety limits for personnel. For cryogenic propellants, the propellant bulk temperature prior to tank pressurization and liftoff is controlled by the ullage pressure which, in turn, is determined by the back pressure from venting. During prepressurization and after liftoff, the vent valves are closed (emergency-relief mode only) to prevent loss of ullage gases or propellant fluid.

### 2.2.1.1 PREPRESSURIZATION

Prepressurization is a part of "on-pad" operations during which pressurant is supplied from a ground source to increase the ullage pressure to a desired level prior to vehicle launch. For boosters and upper stages, an inert gas is used (tables I and II). The ground prepressurization thus accomplished allows a considerable savings in hardware weight in the on-stage pressurization equipment. In a broad sense, the self-pressurization process of the Centaur vehicle ullage while on the launch pad (pressurization by propellant boiloff due to ambient heat) is also prepressurization. For spacecraft, only those propulsion systems that incorporate a blowdown pressurization system require prepressurization; for the remaining propulsion systems, prepressurization is optional. The Mariner Mars '71 (Mariner 8 or 9) is an example of a spacecraft with a pressure-regulated pressurization system that utilized prepressurization; in fact, the Mariner Mars '71 propulsion system can be fueled, pressurized, and monitored before installation on the spacecraft structure. Because the initial ullage volume is small, preheating of the prepressurization gas to save weight is unnecessary. Thus, temperature and partial-pressure conditions are stable, and heat and mass exchange with the propellant are minimal, thereby minimizing venting during boost and orbital injection (before spacecraft engine start).

Many of the ground prepressurization systems are designed with pressure-makeup capability after initial prepressurization. The ambient-temperature-helium prepressurization system of the oxygen tank of the S-IC stage utilized this feature to condition the gas thermally after delivery to the ullage but prior to liftoff. Ullage pressure decay as heat was transferred from the gas to the propellant reactivated the prepressurization system, and helium mass was supplied to the ullage. The result of this operation was that the average temperature of the ullage gas was lower than that in the previous prepressurization cycle. A negative result of the procedure was that the propellant, not the tank structure, absorbed the heat. However, for some vehicles, in particular upper-stage vehicles with cryogenic systems, chilling of the prepressurization gas may be necessary to avoid excessive loss of ullage pressure as a result of heat and mass exchange between the ullage gas and cold propellant. If a stable prepressurization tank pressure is required, pressurant temperature is kept at a level such that the ullage pressure decay due to heat and mass loss to the propellant is balanced by the tank heat inputs. The S-IVB pressurization system designers selected a gas temperature of

approximately 100°R for the prepressurization helium in order to achieve such a heat balance in the $LH_2$ tank.

For boosters and upper stages, gas for prepressurization usually is controlled by means of solenoid-operated valves, which are energized by pressure switches that sense the ullage pressure. To avoid pressurant loss, the operating range or band of the pressure switches (normally redundant) is set below the minimum relief-valve opening pressure. Control orifices usually are employed in the supply line to limit pressurant flowrate and to prevent pressure surges. A gas diffuser (sec. 2.2.2.6) usually is installed at the tank pressurant inlet to minimize turbulence in the ullage volume from the incoming gas.

### 2.2.1.2 MAINSTAGE PRESSURIZATION

Mainstage pressurization is the operational sequence that maintains or increases the ullage pressure level during engine mainstage operation. There are four basic systems for control of mainstage pressurization:

- Pressure-regulated system
- Pressure-switch system
- Passive flow-control system
- Blowdown system

The selection of the system for mainstage pressurization is based on the calculated required pressure profile at the pump or engine inlet (e.g., fig. 4) and the maximum allowable tank operating pressure. The resulting pressure band (i.e., maximum allowable tank operating pressure less the required pressure) is the control band limit of the mainstage pressurization system. If the resulting control band is large, all four methods are potential candidates. However, unless the engine is designed to operate with decreasing supplied inlet pressure, the blowdown mode usually is eliminated from consideration. The passive flow-control method normally cannot maintain the ullage pressure within the desired limits without auxiliary equipment such as a relief valve or shutoff valve and pressure-switch sensing system. If the resulting control-band limits are small, the pressure-switch and the pressure-regulated systems usually are the only methods that can maintain the pressure within the desired limits. The selection of the type of control system will affect the vehicle weight and complexity. Table XI presents the comparative advantages and disadvantages of the four basic systems for control of mainstage pressurization.

A recent advance in pressurization-system design is illustrated by the pressurization system used on the Centaur vehicle. This system combined the features of the passive flow and

Table XI. — Comparison of Chief Features of Control Systems for Mainstage Pressurization

| Control system | Pressure control bandwidth | Reliability | Complexity and weight | Cost | Advantages | Disadvantages |
|---|---|---|---|---|---|---|
| Pressure regulated | Narrowest of the four systems | Depends on reliability of regulator | Sophisticated components<br><br>Regulator weight often less than 70 lbm | Depends on complexity | Can compensate for changes in pressurant or flow demand condition<br><br>Can maintain very narrow bandwidth | Regulator may be difficult to obtain<br><br>Weight increases if more than one pressure band is required |
| Pressure switch | Wider than pressure regulated, narrower than others | Depends on number of components | Relatively simple system<br><br>Component weight usually less than 10 lbm per pressure level | Low in cost when off-the-shelf hardware is used | Usually lighter weight than pressure-regulated system<br><br>Can supply multiple pressure levels without severe weight penalty | Requires supporting hardware for flow control<br><br>Requires redundant sensing system |
| Passive flow control | Depends on mission profile and flow capacity of flow restrictor | Highly reliable; second to blow-down system | Very simple and light-weight | Low in cost when flow restrictor is a simple orifice | Simple system<br><br>Flow restrictor easy to fabricate or purchase | Requires relief valves for ullage pressure control |
| Blowdown | Depends on mission profile | Highest reliability of all systems | Simplest and lightest of all systems | Not applicable | No hardware<br><br>Attractive when propellant fluid head provides most of required pump inlet NPSH | Suitable only when decay in ullage pressure is allowable |

pressure-switch control methods with the control capabilities of an on-board computer. Valves and flow restrictors meter the pressurant flow into the tank ullage, while the pressure levels are controlled by a pressure-switch system or a computer-controlled pressure-sensing and -regulating system.

In pump-fed propulsion systems with long liquid columns and high vehicle accelerations, the hydrostatic head of the liquid column in the feedline may be all that is necessary to provide the required pump inlet pressure; in this case, a stepdown pressurization (overboard venting) or even a simple blowdown mode of operation can be utilized effectively. Stepdown or blowdown pressurization systems offer the added advantage of imposing both a lower and essentially constant pressure differential across the tank wall, because the ambient pressure decreases with altitude and the reducing ullage pressure can be designed to compensate for this decrease. Since the tank structure design is based on the differential pressure, the blowdown mode can, in effect, result in reduced tank and pressurant weight (ref. 35).

In any pressurization system, consideration must be given to structural requirements that may affect the pressurization control bands or relief-valve bands. The necessity for providing a net positive pressure acting on the concave side of a common bulkhead between two propellant tanks is an example of a structurally imposed requirement.

#### 2.2.1.2.1 Pressure-Regulated System

A pressure-regulated pressurization system is one in which a modulating pneumatic regulator (ref. 60) controls the ullage pressure at desired levels during flight. The regulator generally is pilot-valve operated with a narrow control band and can have an internal or external sensing element (ref. 60). The use of a modulating pneumatic regulator ensures an essentially constant ullage pressure during mainstage. Ullage gas weight, ullage temperature profiles, engine performance, propellant utilization, and propellant loading requirements become more predictable with a constant ullage pressure; thus, payload-optimization calculations can be made more accurate.

Many pressure-fed propulsion systems in current launch vehicles and spacecraft are pressure regulated. In general, both oxidizer and fuel tanks using inert-gas pressurization are pressurized through a common pressure regulator to minimize the ullage-pressure difference in the tanks and thereby maintain more consistent engine thrust and mixture ratio. Consistent repeatability of thrust, mixture ratio, and impulse is essential for both pulsing and steady-state engine firings because it makes propellant utilization and loading requirements more predictable. When velocity is trimmed by control of the engine firing time, as in Ranger and some early Mariner spacecraft, close regulation of ullage pressure is desired, so that variations in impulse and thrust are minimized (ref. 15). However, this close regulation is eased by the use of accelerometer-controlled burns rather than timed burns. The pressure-regulated Mariner Mars '71 spacecraft utilized an accelerometer-controlled burn.

Pump-fed propulsion systems also can require a pressure-regulated pressurization system. If the system is pressurized with inert gas and the oxidizer and fuel tanks require the same ullage pressure level, a single (common) pressure regulator can be used. However, when the pressurization gas is in the form of evaporated propellants, as is generally the case in boosters with cryogenic propellants, the pressurization system for each tank must be separate because of safety and other considerations.

Two types of reference pressures are used with pressure-regulated systems: ambient (gage) and vacuum (absolute). The gage type has one side of the control element exposed to the ambient environment such that the actuation force is proportional to the difference between the regulated pressure and the ambient pressure. The vacuum-reference type utilizes a sealed evacuated capsule (aneroid) for the reference side of the the control element, and consequently the actuation force is proportional to the difference between the regulated pressure and the constant force exerted by the capsule. There are applications of each type. In the Atlas booster, ambient-pressure reference is advantageously used for both relief valve and mainstage pressurization regulators (ref. 61). Thus, in absolute values, the ullage pressures decrease with altitude while the fluid hydrostatic head (particularly for the LOX tank) increases. Consequently, adequate pump-inlet NPSH is maintained at high altitudes as well as in early stage of the boost, and tank wall thickness is a minimum. However, when venting is necessary during atmospheric flight to maintain low propellant temperatures, as in the Centaur vehicle (ref. 62), vacuum reference must be used for the ullage-pressure control.

For structural or propellant-conditioning reasons, the system regulator and relief valves can have dissimilar reference levels. However, in a zero-pressure environment, the regulator control band could exceed the vent-valve modulation band and create a simultaneous pressurizing and venting condition. Because the critical design condition for relief valves, is at zero ambient pressure, the reference pressure (whether ambient or vacuum) will have no effect (from the tank structure considerations) if the tank structure is designed for the worst condition at zero ambient pressure.

#### 2.2.1.2.2 Pressure-Switch Systems

Pressure switches are ON-OFF transducers that convert fluid pressure changes above or below a given set point into electrical signals. These switches are used for both pressure indication and pressure control.

The pressure-switch control system, sometimes called a step-regulation or nonmodulating system, utilizes a number of parallel-connected sets of switches, flow restrictors, and solenoid-operated valves to implement pressure control. Pressure-switch control systems have been used successfully in pressure-fed as well as pump-fed propulsion systems. An advantage is that the pressure switches, solenoid-operated valves, and flow restrictors usually are much easier to design and manufacture than is a sophisticated pneumatic pressure regulator.

In a pressure-switch control system, the switches that sense ullage pressure open solenoid-operated valves to allow gas flow into the tank ullage in response to a drop in ullage pressure. Likewise, the pressure switches close these valves to stop the pressurant flow as the ullage pressure increases above the pressure-switch limit. Figure 12 is an example of a pressure-switch control system. The redundant pneumatic pressure switches controlling the primary flow-restrictor shutoff valves actuate/deactuate within the upper portion of the pressure band (pressure band No. 1 on fig. 12). Some margin is allowed for pressure-switch band shift (i.e., the switches are designed not to actuate coincident with the pressure-band upper limit). Similarly, the redundant pneumatic pressure switches controlling the solenoid-operated valve in the booster system actuate/deactuate in the lower portion of the band (pressure band No. 2 on fig. 12); again, some margin is allowed for pressure-switch

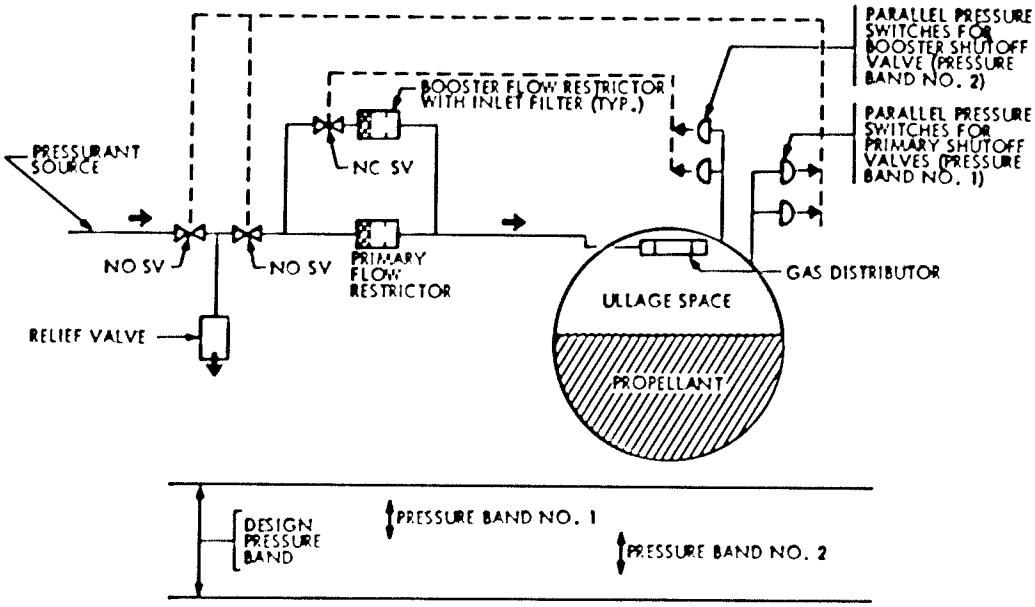


- Relief valve protects system between valves from overpressurization.
- Flow restrictor inlet filter required only if the inlet diameter is less than 0.0156 in.
- NC SV = Normally closed solenoid valve.
- NO SV = Normally open solenoid valve.
- Electrical circuit — — — —
- Pneumatic circuit ————

Figure 12. - Schematic of a pressure-switch control system.

band shift. Although figure 12 shows a filter upstream of the flow restrictor, filters normally are not used unless the flow-restrictor opening is very small (< 0.016 in. diam.).

The example in figure 12 has only one main and one "booster" flow restrictor that increased the supplied pressurant mass when the flow demand exceeded the capability of the primary flow system. In the S-IC fuel-tank pressurization system, which had a total pressure deadband of 8.2 psi, the flow-control system consisted of five valves and flow restrictors in parallel Four valves were opened at predetermined times with the fifth valve used as a backup. The backup valve was pressure-switch controlled; normally it did not operate during S-IC mainstage operation.

#### 2.2.1.2.3 Passive System

Passive systems for flow control offer a simple and relatively inexpensive means of tank-pressure control adequate for many applications, and have been used with all three types of pressurization systems. In a passive system, the flow-restrictor element can be a simple orifice plate, a flow-control nozzle, or a cavitating venturi (normally used for liquid flow control). With any of these flow restrictors, the system controls by virtue of preset calibration rather than by pressure sensing and active valve response. Because there are no moving parts, a passive system achieves a high degree of reliability and has very low hardware weight.

Flow restrictors have been so extensively studied and standardized that a high degree of correlation between calculated (refs. 63 and 64) and actual gas flows can be obtained, provided that care is taken to avoid conditions such as flow-restrictor corrosion (fouling). Of the three types – venturi, nozzle, and round-edged orifice – the venturi has the smallest pressure loss and the orifice plate usually has the largest pressure loss at a given flowrate and inlet conditon.

A difficulty with the passive flow-control system is its inability to compensate for unforeseen changes in ullage or pressurant conditions. The pressure-regulated system has this capability if the change is not beyond the regulator limits. A prime example of unforeseen changes in system conditions occurred in the maiden flight of the S-IC stage. In this stage, a critical-flow venturi system controlled pressurization of the LOX tank. Although sufficient pressure was supplied to the LOX pump inlets at all times to satisfy the NPSP requirements, the S-IC LOX tank ullage pressure dropped below the predicted minimum limit toward the end of the burn period. The cause was given as system demand that was greater than predicted values, which were based on S-IC static firing test data with a critical-flow venturi system. For subsequent flights, the ullage pressure band was changed to be consistent with system performance. It should be noted that the S-II stage of the Saturn vehicle was converted to calibrated-orifice systems for both the $LH_2$ and LOX tank pressurization control effective with the AS-510 flight, and no problems occurred in either system. The

S-II orifice configuration is shown in figure 13. For the pressurant conditions in the S-II pressurization systems, orifice discharge coefficients of 0.90 ± 0.03 were obtained with this configuration.

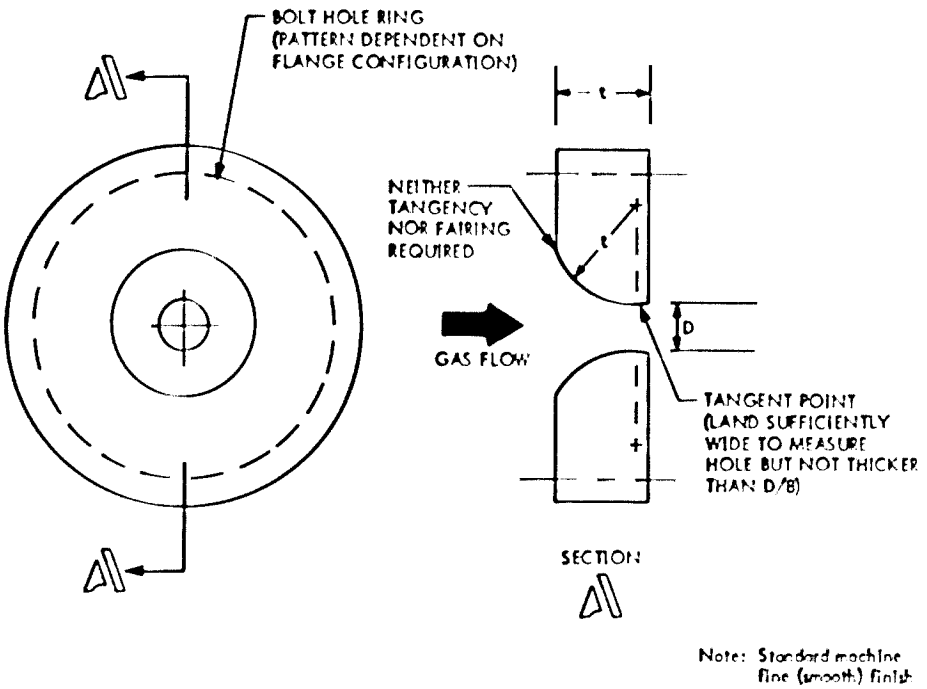


Figure 13. - Sketch of orifice configuration used in pressurization system of Saturn S-II stage.

Cavitating venturis are useful when it is desirable to prevent fluctuations in flowrate caused by fluctuating back pressure on the control valve. Compensation for changes in system pressure is simplified with cavitating venturi valves, because corrections are required for upstream pressure changes only. In the design of a cavitating venturi valve that is to be used for flow-control purposes, the total pressure available and the vapor pressure of the liquid to be controlled must be known. The difference between these two pressures will be the total static head available for conversion in the venturi valve to velocity head (ref. 43). The available head difference also is influenced by the propellant temperature, since the throat static pressure is the vapor pressure. This flow-control element has been used successfully in the Titan II (Stage 1) to control flow of liquid $N_2O_4$ to the mainstage pressurization heat exchanger and in the Apollo LEM descent stage to control the flow of the fuel and oxidizer to the engine.

#### 2.2.1.2.4 Blowdown System

The blowdown system of operation derives its name from the ullage pressure decay that occurs during propellant outflow. The blowdown system does not require a regulator, isolation valve, or pressurant tank. The gas required to expel the propellant is stored at initial pressure levels of 300 to 600 psi. When the propulsion system is operating, the gas expands against a flexible diaphragm, or the propellant itself if a surface-tension device is used, and forces the propellant into the engine or pump. As propellant is consumed, tank pressure decreases; in a pressure-fed system, engine thrust likewise decreases. Thus, a pressure-fed blowdown system would not be suitable for a mission that required maneuvers to be executed at a constant thrust or for use with an engine designed to operate at a fixed value of inlet pressure.

A blowdown pressurization system has been used largely with monopropellant propulsion systems simply because the thrust and specific impulse of a bipropellant engine with a blowdown-mode pressurization system have not been sufficiently predictable to satisfy the vehicle reliability and performance requirements. Although a blowdown system can be used successfully for timed burns, it is more easily adapted to accelerometer-controlled maneuvers. Reliability and simplicity are the main advantages of the blowdown system, especially in monopropellant propulsion systems (ref. 65).

The sizing of the propellant tank of a blowdown system generally is based on three design parameters: initial ullage pressure, final ullage pressure, and propellant volume to be expelled. In pressure-fed propulsion systems, the final tank pressure is dictated by the minimum chamber pressure and thrust requirements for the engine; in pump-fed propulsion systems, the final pressure is set by the pump inlet NPSH requirement. The initial ullage pressure and volume determine the tank weight in both systems. A weight tradeoff study is performed to arrive at optimum initial ullage pressure and volume. In pressure-fed propulsion systems, the decrease in engine thrust with propellant consumption can be utilized advantageously in spacecraft designs where acceleration or engine minimum pulse width is limited. In these cases, it is advantageous to make the decrease in engine thrust and the decrease in engine minimum impulse bit correspond as closely as possible with the reduction in vehicle weight during flight.

Examples of successful blowdown pressurization systems in spacecraft are the Atmosphere Explorer OAS, the Intelsat III propulsion system, the Earth Resources Technology Satellite OAS, and the Pioneer 10 and 11 propulsion systems. All have a bladder within the propellant tank; the Pioneer vehicles are also spin stabilized.

The ERTS OAS (fig. 7) blowdown system was not thermally conditioned, but the Pioneer spacecraft ullage gas was heated continuously during its mission. Further, the Pioneer spacecraft has a monopropellant pressure-fed propulsion system with six variable thrust engines (0.4 to 1.2 lbf) and a nitrogen-gas/propellant thermal-conditioning system (fig. 14

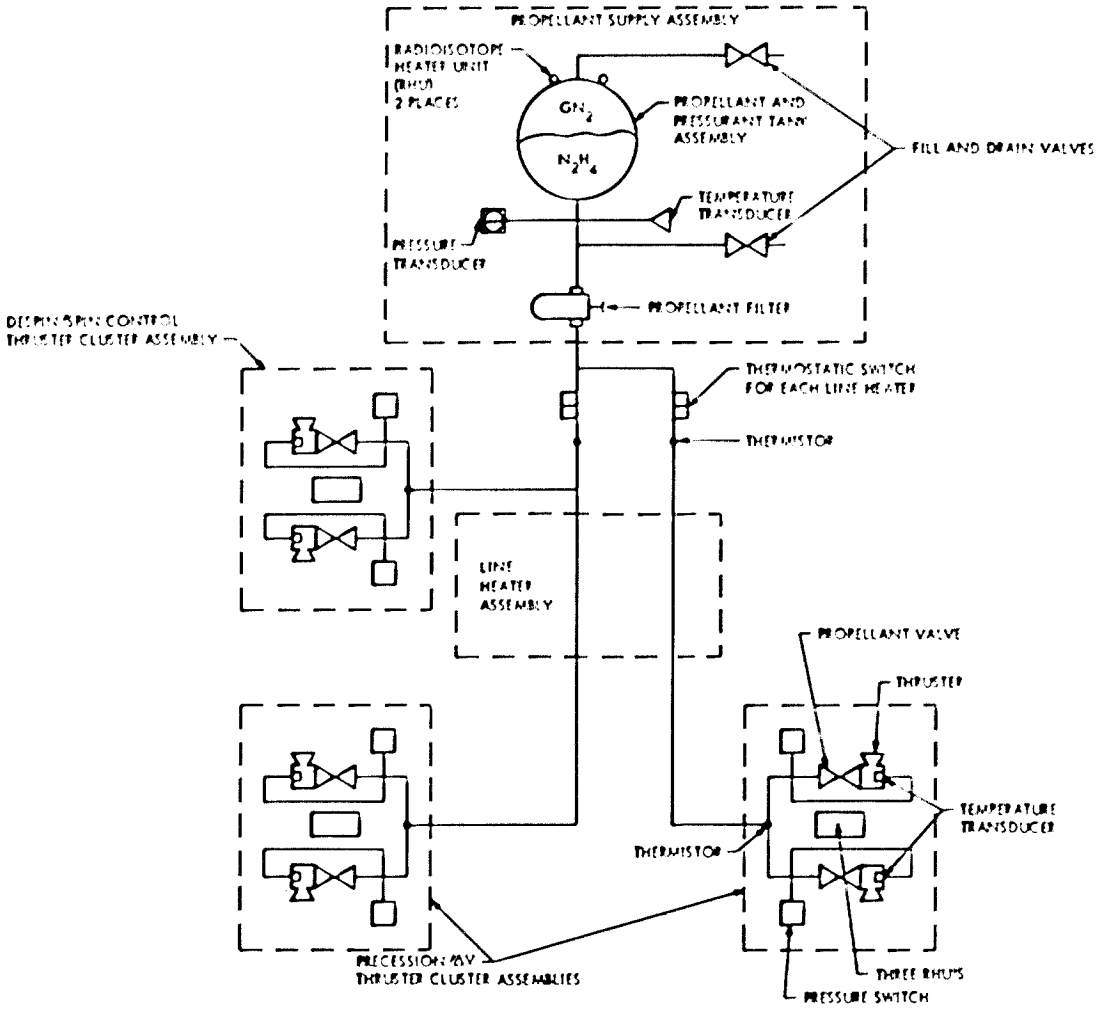


Figure 14. - Schematic of propulsion subsystem on the Pioneer 10 and 11 spacecraft (adptd. from ref. 66).

(ref. 66)). The functions of the propulsion system are to perform precession and velocity correction maneuvers and to adjust the spacecraft spinrate. To accomplish these functions, a total impulse of 11 970 lbf-sec using 56.8 lbm of hydrazine propellant with the ullage gas initially at 565 psi is required (ref. 66). Because the Pioneer spacecraft travels away from the sun, the environmental temperature becomes colder and colder. Consequently, to prevent

the gas from becoming too cold and thereby losing pressure, two plutonium dioxide radioisotope heating units (RHU) are installed on the tanks to supply two watts (total) of thermal energy to the pressurant continuously. In addition, each of the three thruster assemblies has three RHUs to maintain its temperature within design limits. Finally, to maintain the propellant above 500°R, parallel-redundant electrical line heaters are bonded to the propellant line (fig. 14). These line heaters are actuated by two series-redundant thermostats. Neither the ERTS OAS nor the Pioneer spacecraft pressurization systems had development or operational problems. Much of the success of these pressurization systems probably can be attributed to the simple design and minimal use of components.

The blowdown pressurization system on the Titan II second-stage oxidizer tank (table II) is an example of the use of this system on an upper-stage vehicle. In some booster vehicles, the mainstage pressurization employs a combination of pressure-regulated and blowdown mode of operation. The time or event at which the blowdown mode is to be initiated depends on the mission and stage characteristics. Thus, in the Atlas vehicle (ref. 61), regulated mainstage pressurization ceases at booster engine cutoff and jettison, and both propellant tanks assume a blowdown mode while the sustainer and vernier engines are firing. The blowdown mode was advantageous in the Atlas vehicle because it eliminated the need for a separate pressurization system for the sustainer and vernier engines after the regulated system was jettisoned with the booster engine package. Even with decaying tank ullage pressures, the large propellant hydrostatic head resulting from high vehicle acceleration adequately sustained the engine pump NPSH.

The blowdown mode of pressurization in cryogenic tanks is efficient both from the standpoint of pressurant consumption and venting requirements. Because of the bulk-propellant cooling that results from the flashing of propellant to vapor when the ullage volume increases, the propellant can subsequently absorb a substantial amount of the heat leaked into the tank before the venting pressure is reached; thus the tank venting loss is reduced. However, bulk liquid boiling or flashing associated with the blowdown mode necessitates the use of booster pumps or pumps that are designed to handle saturated liquid propellants with specified amounts of entrained vapor.

### 2.2.1.3 REPRESSURIZATION

For upper stages and spacecraft with multiple-burn capability, provisions must be made so that adequate ullage pressure is available, or can be made available, at the time the engine is required to restart. In many pressure-fed propulsion systems with multiple-burn capability, the inert gas in the ullage often is colder than the storable propellant at the end of an engine burn; therefore, engine "off" periods typically produce an increase in ullage pressure that obviates the need for any design provision for restart pressure increase. However, the situation can be different in pump-fed propulsion systems where cryogenic propellants often are employed. Here, the pressurant is usually "hot" relative to the propellant, so that heat

transfer from the gas to the liquid causes ullage pressure decay during long coast periods. The precise condition depends on the individual system design and mission profile. In the Centaur stage, for example, ullage pressure levels are maintained by boiloff of the cryogenic propellants (self-pressurization) during the initial burn period; subsequently the propellant tanks require only a simple prepressurization prior to engine second start to meet the low NPSH requirement of the boost pump. On the other hand, in the Saturn S-IVB stage the ullages are pressurized with heated pressurant during initial powered flight, followed by continuous hydrogen tank venting during the coast period; as a result of the venting, extensive repressurization prior to the engine second start is necessary as shown in figure 15 (ref. 67).

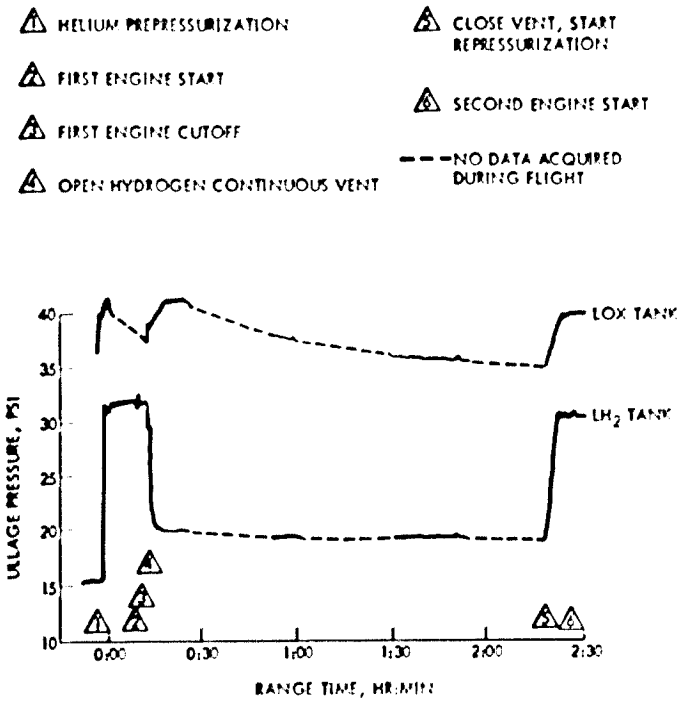


Figure 15. - Ullage pressures in S-IVB tanks as recorded on the AS-509 flight (ref. 67).

The S-IVB is the only vehicle with a separate active system for repressurization (table II). The major component of that system is the hydrogen/oxygen burner – a fuel-rich gas generator operating at low pressure and using main tank propellants at tank-head pressures. A helium heat exchanger in the burner exhaust heats helium (43°R) from the storage vessels to approximately 250°R for injection into the two propellant-tank ullage spaces. The burner

operation continues until engine ignition makes available the mainstage pressurization systems as for the first burn period, i.e., helium heated in the engine heat exchanger for injection into the oxygen-tank ullage, and gaseous hydrogen from the engine injector manifold for injection into the hydrogen-tank ullage.

High operating ullage temperature and low helium storage temperature produce substantial weight savings in the S-IVB stage repressurization system to offset the weight and complexity of a separate hydrogen/oxygen burner. For a different application, this might not be the case. The selection of an optimum design of repressurization systems depends (as it does with the mainstage pressurization) to a great extent on the tradeoff among weight saving, system complexity, and size of the vehicle.

### 2.2.1.4 TANK VENTING

The venting system provides for the disposal of ullage gas so that excessive pressure will not build up in the tank; the system includes the vent and the relief (modulation) modes of operation. As used in this text, "vent mode" refers to actuation of a valve in response to a ground or flight-programmer command to expel gases from the tanks, whereas "relief mode," which may utilize the same valve, refers to automatic valve operation in direct response to excessive ullage pressure.

In many earth-storable propellant systems, there is no vent valve as part of the flight system, only a disconnect (ref. 68) and a flight relief valve. For stages with cryogenic propellants, a flight vent valve in addition to a flight relief valve is needed. A popular design approach has been to combine the vent and the relief functions into a single vent/relief valve that is activated by the flight programmer for vent modes but has an automatic backup relief mode of operation. Because the gas flow requirements for the vent mode typically are much greater than those for the relief mode, the flow capacity of the relief valve normally is oversized. This was the case, for example, for the S-IC oxygen tank 10-in. vent/relief valve and the S-II fuel and oxidizer 7-in. vent/relief valves.

With cryogenic propellants, the vent system performs several significant functions. The system is designed to vent boiloff gases during tank filling to maintain the tank pressure at or below the specified safe limit for equipment and personnel. It is also designed to provide relatively restriction-free venting to the lowest allowable ullage pressure during ground-hold operations or after a long dormant period of the vehicle in orbit so as to attain the lowest possible propellant bulk temperature prior to engine start. The relief mode functions to prevent over-pressurization and damage to the tank structure.

With noncryogenic or storable propellants, ullage venting seldom is necessary during normal operation after the tanks are loaded with propellant; thus, the relief valve serves only as a safety device.

When the pressurization system is designed to vent during flight, a determination must be made whether the mass loss is detrimental to ullage pressure, whether the vented fluid creates a hazard, and whether the resulting thrust is a problem to the vehicle attitude control system. During scheduled venting operations, the mass lost normally is not detrimental to ullage pressure, because the process is simply maintaining the pressure level below the permissible maximum limit or the ullage mass is being replenished by propellant boiloff during thermal conditioning. The hazardous aspect of venting occurs when the stage is ascending or descending, or when there are sensitive surfaces on a stage (e.g., solar cells, optical surfaces, or sensors) that should not be contacted by the ullage gas.

#### 2.2.1.4.1 Venting Control

The vent-mode control usually includes a provision for holding the vent valves in a wide-open position during tank purging, propellant loading, and ground hold prior to tank prepressurization. Typically, the vent valves are closed during liftoff and atmospheric ascent, when large slosh waves are present and the possibility of liquid venting with attendant disturbance of vehicle attitude exists. The vent valves on hydrogen tanks may be programmed to open during vehicle coast periods for propellant conditioning and subsequently close prior to engine restart. For $LOX/LH_2$ systems, oxygen-tank venting is much less frequent as a result of the relatively successful thermal-control designs used in these tanks (sec. 2.3.1.1). The final vent function is tank "safing" after the propulsion system final burn is complete. Tank safing is the venting process in space that voids the tank of residual propellant and gas; it may be accomplished in a variety of ways. For example, in the Saturn S-IVB stage, a latch-open mechanism on the vent valves that prevented inadvertent closure during the propellant conditioning period also provided tank safing; in the Skylab terminal stage, explosive-actuated vent valves were used to initiate and maintain the tank safing operation.

The relief mode (vent mode inactive) usually is planned for atmospheric ascent, booster jettison or staging, mainstage engine start, and attitude maneuvering during coast. Generally, if the relief mode is to be used for atmospheric ascent (or descent), the system is designed to preclude the combustion of the gases in the skin boundary layer. One method is to design the relief system to be inoperative (for normal operations) below the elevation that can support combustion. For example, the relief system for the Saturn S-II hydrogen tank was designed not to vent below 10 000 ft.

The relief mode is not necessarily restricted to one pressure band. For structural and operational reasons, the atmospheric ascent (or descent) period, coast periods, and mainstage operation periods may have different relief-mode pressure-band requirements. The various relief pressure levels may be met by one set or by several sets of valves. For the Saturn S-II stage, for example, the hydrogen tank dual valves, pneumatically in parallel, were designed to have two relief band levels by having two different pilot mechanisms for different pressure levels.

#### 2.2.1.4.2 Zero-Gravity Venting

In the calculation of the decay of ullage pressure during zero-gravity (zero-g) venting, the inability to describe accurately the gas/liquid interface during venting (refs. 69 and 70) and the assumption that the ullage gas is not superheated (ref. 71) typically result in a predicted profile much lower than that observed during zero-g venting tests. In the design and development of the S-IVB and Centaur upper-stage vehicles, considerable attention was given to zero-g tank venting (ref. 72). In a zero-g environment, the two major venting problems are (1) the mass loss due to unscheduled liquid expulsion caused by propellant sloshing or heat ingression into the ullage space, and (2) the potential thrust imbalance created by the vented fluid (sec. 2.2.1.4.3).

When the ullage gas is colder than the propellant, sloshing of the propellant can result in increased heat and mass transfer among the liquid propellant, the ullage gas, and the tank wall. This behavior tends to increase the rate of ullage pressure change and cause unanticipated gas venting (ref. 73). Slosh (ref. 74) during low-gravity conditions can result from the following causes:

- Vehicle attitude-control maneuvers
- Residual kinetic energy generated from liquid slosh during engine firings (ref. 75)
- Mechanical springback of tank-wall lower section when the engine shuts down
- Mechanical springback of the aft bulkhead

Unexpected mass venting occurred during a flight of the S-IVB stage. Approximately 11 500 seconds after liftoff, a sudden increase in the oxygen-tank ullage gas temperature caused the S-IVB oxygen-tank ullage pressure to rise rapidly and subsequently cause the relief valves to modulate. Prior to the incident, the S-IVB oxygen-tank ullage gas had been at an average temperature lower than the bulk temperature of the liquid-oxygen; this condition occurred because the ullage gas was in contact with the common bulkhead, which was being chilled by the liquid-hydrogen propellant. The increase in ullage-gas temperature in the S-IVB tank was caused by the forward movement of the oxygen as a result of a 180-deg roll and 180-deg pitch maneuver of the vehicle. Since the mass loss due to venting occurred after the final engine burn, the lost mass and any resulting thrust imbalance did not affect the mission.

Venting liquid propellant during zero-g coast periods is undesirable for stages with restarts remaining in the mission. For these stages, the aim is to keep the propellant within the tanks for maximum burn-time capability. Liquid venting (i.e., expulsion of liquid in lieu of gas) can occur as a result of liquid-propellant movement, which can be caused by vehicle dynamic conditions, maneuvers, drag, or surface-tension forces in the liquid. To preclude

venting of liquid, several methods have been used to orient the propellant away from the vent valves (ref. 76). In one method, anti-slosh baffles have been installed inside the propellant tanks to absorb the slosh energy and minimize the possibility of venting liquid overboard as the result of tank wall or aft bulkhead springback motion (ref. 72). In another method, a settling thrust is used for propellant orientation. On the Centaur stage, small thrusters are fired during coast periods to provide a low continuous acceleration on the order of $10^{-5}$ to $10^{-4}$ g's to maintain the liquids in a settled condition. On the S-IVB stage, continuous propulsive venting was used to accomplish the same purpose, and in addition such venting was employed to condition the propellant temperature prior to repressurization for the second engine burn.

Thermodynamic venting* (ref. 77) has been proposed to circumvent the problem of venting directly from the tank ullage, but it has not been used in any current system. The basic concepts involved in thermodynamic venting have been demonstrated in the cryogenic storage systems used on the Apollo Service Module, where the systems supply both LOX and $LH_2$ for the fuel cells and gaseous oxygen for the crew. Surface-tension devices and mechanical separators are other concepts suggested (not flight proven) as means of preventing liquid venting (ref. 78).

#### 2.2.1.4.3 Vent Thrust

Vent thrust is the force created by the venting fluid (in a direction opposite to the motion of the fluid) as it undergoes a momentum change on leaving the vehicle. The fluid may be gaseous or liquid or a combination of the two phases. Vent thrust can be an aid for settling or orienting the propellants (as in the S-IVB stage) and for propellant retention, or it can be a problem by creating unwanted changes in the vehicle attitude.

During mainstage operations, vent thrust normally is not a problem, but the thrust generated is required to be below a predetermined maximum limit. The reason is that the vehicle control system is designed to correct for thrust loads from zero to the predetermined limit. For the Saturn S-II stage, for example, neither the oxygen-tank nor the hydrogen-tank vent system was permitted to impose more than 180 lbf onto the vehicle during S-IC and S-II mainstage operations.

In periods when the vehicle attitude control system is not active, any appreciable side thrust can cause undesired attitude changes. To minimize adverse thrust from pressure venting, balanced or symmetrical venting exhausts have been used. In a balanced vent system, the flows between the exhaust ducts or nozzles must be equalized and in addition any asymmetrical force induced by the impingement of the venting exhaust plumes on the tank skin surfaces must be limited. These impingements have been known to cause appreciable disturbances in vehicle attitude. An example is the substantial yaw moment that occurred in an early Centaur flight (refs. 79 and 80); the yawing motion increased propellant slosh,

*Thermodynamic venting is the process of a fluid being extracted from a tank, expanded through a Joule-Thomson valve to produce a temperature drop, subsequently routed through a heat exchanger to cool the remaining fluid in the tank, and then vented overboard

which increased the heat and mass transfer between the liquid and the ullage gas and resulted in increased ullage venting that further aggravated the vehicle attitude disturbance. In the S-IV, S-IVB, and Skylab terminal stages, successful balanced venting was achieved with diametrically opposed exhaust ports.

### 2.2.2 System Components

In a pressurization system, the design and operating characteristics of the functional components and their integration determine the system performance and reliability. In pressure-fed systems, which usually are required to operate for extended periods under severe duty cycles and extreme temperature and pressure fluctuations, stringent demands are placed on component material properties. For instance, because of extended life requirements and the nature of the space environment, such factors as long-term chemical compatibility, sublimation of materials in space, corrosion, contamination, creep, and fatigue of materials become important considerations in the design of reliable valves. Furthermore, requirements for low leakage exert added emphasis on component design and materials. In fact, most anomalies in long-term pressure-fed propulsion systems have resulted from leakage of propellant across engine valves or from leakage of pressurant gas across regulators or check valves.

The improvement in system reliability through quad or series redundancy is accompanied by increased system cost, weight, and complexity, and possibly by degradation of performance. In addition, series-connected propellant valves have not been widely used in cryogenic propellant systems because it is difficult to properly synchronize valve opening and closing and because extreme pressures can occur when the cryogenic propellants are trapped between valves. Quad arrangements of regulators and check valves were used in Apollo Service Module and Command Module systems (ref. 81) and series-connected check valves were used in Gemini spacecraft (ref. 82).

The current trend in circumventing the long-term leakage problem for extended missions is to isolate both the pressurization and the propellant systems by means of series- and parallel-connected explosive (squib) valves (ref. 83). Such an arrangement is not applicable to attitude control systems if frequent engine firings are required. Life capability, leakage characteristics, and zero-g operation remain as major concerns in design of pressurization systems for attitude control.

In the pump-fed booster propulsion systems, the life requirements for the system components generally are not critical, but the components are required to operate under more severe environments of vibration and acceleration than are the components in a pressure-fed system. However, components in pressure-fed systems usually have narrower tolerances in terms of percentage than do components in pump-fed systems. In pump-fed propulsion systems, regulators, solenoid-operated valves, vent valves, and relief valves are

flow-control valves that normally are pilot-valve operated. Pilot-valve-operated pneumatically actuated controls usually are used for the larger valves to minimize weight of the actuators, electrical power consumption, and sensitivity to vibration and acceleration. The requirements for electrical power and actuation gas have been further reduced in some applications by the use of latching valve mechanisms and latching solenoids, at the expense of slightly increased component weight and increased cost.

### 2.2.2.1 TANKS

#### 2.2.2.1.1 Pressurant Tanks

Pressurant tanks (i.e., gas-storage vessels) usually are of monocoque design, usually operate at high stress levels, are internally mounted within the vehicle, and are insulated from deflection of vehicle structure by appropriately designed mountings. Except where problems in installation space arise, the tank shape usually is spherical because of the sphere's structural efficiency and hence weight advantage over other configurations. The alloy most often used to construct the pressurant tanks has been Ti-6Al-4V (ref. 3).

Significant changes in pressure and temperature are serious problems with pressurant tanks. In addition to the influence of external environments, the temperature gradients resulting from heat of compression during tank charging and decompression cooling during pressurant discharge must be evaluated, so that adequate strength margins and sufficient volume at time of pressurant demand can be ensured. Tank pressure charging usually can be programmed to ensure temperature/pressure combinations that are consistent with a tank's capabilities. On the other hand, the pressurant consumption schedule normally is not known precisely but rather must be predicted for a particular mission. These hypothetical consumption schedules, necessarily conservative, become the basis for the depletion analysis.

The "first-cut" analytical methods presented in section 2.1.3.2 are applicable for approximating the required pressurant tank volume; however, much more detailed information on tanks may be obtained from reference 7.

#### 2.2.2.1.2 Propellant Tanks

For propellant tanks, efforts have been made to minimize stage dry weight by the use of the monocoque or semi-monocoque tank construction and by the use of a common bulkhead between oxidizer and fuel tanks (ref. 3). In general, the monocoque tank structure is designed to withstand only the internal fluid pressure. The structural rigidity necessary to resist buckling or collapsing of the tank shell and common bulkhead is provided by the pressurization system, which maintains the required minimum pneumatic pressures in the tanks and a pressure difference within the required range across the bulkhead.

The propellant tanks in the Centaur (ref. 4) and Atlas (ref. 84) vehicles are of monocoque construction. The tank skin must be stabilized at all times by internal gas pressure or by the application of tensile load. During tank assembly and transport, support is provided by applying tensile forces to ground handling adapters attached to the forward and aft cylindrical tank rings. In the case of the Centaur, structural integrity is maintained with standby pressure of 4 psig in the (forward) fuel tank and 10.5 psig in the oxidizer tank after the stage is erected. Emergency tensile load is also available during this period. For the Atlas, the ullage-pressure requirements similarly ensure that both tank monocoque cylindrical shells are subjected to a tensile stress. On the other hand, the structure for the tanks of the S-II stage is designed to provide adequate support during transport and assembly without the need for internal pressure or mechanical tensile forces.

A common bulkhead normally is designed to take forces that cause a tensile load to be applied to its structural facing (positive pressure differential). To ensure that this condition exists, the proper magnitude and direction of pressure differential across the common bulkhead are maintained by control of ullage pressure during ground hold and powered flight. In the determination of the total pressure differential required for the common bulkhead, the loads on the common bulkhead due to acceleration during powered flight are included. In S-IVB and S-II stages, the common bulkhead provides some degree of rigidity to withstand a limited amount of negative pressure differential.

Detailed information on propellant tank design is presented in reference 3.

### 2.2.2.2 PRESSURE REGULATORS

The pressure-reducing regulator, the most common type of pressure regulator in airborne systems, is treated in detail in reference 60. In pressurization systems, these regulators are used to reduce pressure and control the flow of pressurant gas as required by the system.

In many single-stage regulator designs, a flow-responsive element such as a flow-limiter valve or a critical-flow orifice (ref. 60) is incorporated in the line to minimize the tendency to overpressurize under the initial high-flow startup conditions (ref. 85). Another advantage of a flow-limiter in series with the pressure regulator is a reduction in the required flow capacity of the relief valve; in the event of a failed-open regulator, the relief valve has to handle only the limited flow to prevent rupture of the propellant tank. In some pilot-operated-regulator designs, the main regulator valve usually remains in the closed position below the minimum designed inlet pressure while the pilot valve stays open (ref. 86). In this case, the flow-limiting function is served by the restriction in the pilot valve.

Pressure regulation band. – The variation of regulated pressure about its desired value (called the set point) is known as bandwidth. Bandwidth denotes regulator accuracy and is expressed in maximum percent deviation from the set point (bandwidth ratio) or in psi

deviation from the set point. Accuracies generally decline if the upstream pressure is either substantially higher than or nearly the same as regulated pressure, or if regulated pressure is set close to zero psig.

In pressure-fed propulsion systems where velocity trims are performed, as in Apollo, Ranger, and Mariner spacecraft, accurate predictability of impulse is required. Both shutdown impulse and steady-state thrust tolerances are limited to a practical minimum. This limitation influences the required ullage-pressure regulation by decreasing the permissible regulator bandwidth. The portion of thrust error or tolerance (in terms of percentage of the nominal thrust) contributed by the regulator deadband ranges from one-half to one times the bandwidth ratio. For example, the thrust error due to tank pressure variation could be 1.5 to 3 percent if the regulator bandwidth ratio were 3 percent. Other sources can contribute to thrust error (e.g., variations in check-valve pressure drop, expulsion pressure differential, and other feed-system pressure drops). These variations can amount to as much as the change due to the regulation bandwidth. In allocating the budget for the regulation bandwidth, an error analysis usually is performed to determine the distribution of the system pressure tolerances (ref. 87).

In a pump-fed propulsion system, the permissible lower limit of the pressure regulation band is determined by the algebraic sum of the worst-case combination of pump inlet NPSP, the propellant vapor pressure, and the propellant feedline pressure loss; a margin for safety (in terms of pressure) also is included in the total. The upper limit of the regulation band is determined by the tolerances on the regulator. In addition, the upper limit is kept below the relief-valve minimum reseat pressure; otherwise, the system can be subject to unnecessary venting.

Regulator failure modes. – Both component development and flight experience indicate that the pressure regulator is one of the more unreliable components in ullage pressurization systems in pressure-fed propulsion systems (ref. 88). This characteristic stems from the inherent design of the regulator, in which a number of moving parts are required to function quickly, continuously, and precisely under widely varying flow, pressure, and temperature conditions. Regulator malfunctions or failures encompass a number of different modes and causes. These problems are treated in reference 60.

Experience indicates that the regulator parts made of materials that are considered to be compatible with the propellants still are subject to corrosion, swelling, creep, or contamination by products of corrosion. Swelling and creep of Teflon and other polymers when exposed to oxidizers have caused valve seat leakages and regulator malfunctions. In the so-called "flow decay" phenomenon, contamination can be produced internally by the reaction of the oxidizer $N_2O_4$ with some metals to form complex nitrate particles (ref. 89).

### 2.2.2.3 PRESSURE SWITCHES

Pressure switches for space vehicles have to exhibit high reliability under extreme temperatures and high vibration levels. In the past, pressure switches generally were regarded

as poor in resistance to vibration; they were subject to chatter, arcing and fusing of contact points, and changes in contact resistance at the 25 to 50g vibration levels produced by rocket engines. However, recent design improvements in pressure switches have alleviated many of these problems. In pressurization-system control, pressure switches have been used in conjunction with shutoff valves to control pressure by functioning as either ON-OFF regulators or relief valves (ref. 43). The Centaur pressurization system is an example of a pressure-switch control system.

Many switch designs have an inherent problem known in the switch industry as "first-cycle stick"; the term refers to the fact that the first operation of the switch, especially after it has undergone an extreme temperature change, will be different from subsequent operations. This difference is caused by the movable elements within the switch repositioning themselves after an extreme temperature change or after being brought from a pressure that was initially zero (ref. 43). The Belleville-spring pressure switches that terminate the prepressurization gas to the tank ullages in the S-II stage were subject to this kind of sticking.

Another pressure switch "sticking" phenomenon has occurred in development test programs. In this malfunction, the Belleville spring inside the pressure switch "sticks" and causes the actuation point of the switch to rise above its design limit. This behavior can be detected by design verification tests of the switch. Usually the only solution is redesign of the switch or the Belleville spring.

Details on the design of the Belleville spring and the pressure switch itself as well as guidelines on the selection parameters used to achieve the proper pressure-switch configuration may be obtained from reference 43.

### 2.2.2.4 VALVES

#### 2.2.2.4.1 Vent Valves

In storable-propellant systems such as the Apollo RCS, venting is required only during propellant loading operations. This venting is accomplished by manually connecting vapor exhaust lines to disconnects on the the tank. On completion of propellant loading, the vapor disposal lines are disconnected, and the tank vent coupling is capped in preparation for the mission.

In cryogenic-propellant systems such as those on the S-II, S-IVB, S-IC, and Centaur stages, the tank vent and relief functions are combined in a single component to reduce weight. The valve venting function usually is performed by a pneumatic actuator controlled by a solenoid-operated pilot valve. In some designs, a fail-safe feature is incorporated by using normally-open solenoid pilot valves, so that in the event of an electrical failure on the ground the pilot pressure is applied and the vent valves are opened (ref. 5).

Nontoxic and nonhazardous propellant vapors normally are expelled into the atmosphere and require no supporting exhaust system. However, toxic and hazardous propellant vapors are routed from the vent valves through mated couplings to a facility disposal system. At initiation of tank prepressurization, the vent valves are commanded to close. Seconds prior to launch, the plumbing from the facility disposal system is disconnected from the stage by separation of the coupling halves.

Size. – In addition to its weight, the vent-valve size is a prime consideration and often will govern the type of component selected for a given application. The operating pressure and temperature, the flow medium, the flow capacity (and corresponding pressure drop), and the leakage requirements are factors that influence the selection of the vent-valve size.

During loading of cryogenic propellants, the vent valves usually are required to exhaust a maximum volumetric rate, because of the combined effects of high boiloff rate, high loading rate, and low ullage pressure. The latter is important for personnel safety as well as for maintaining low propellant temperature. The vent ducts and valves usually are sized according to the required filling rate and the allowable venting back pressure during propellant loading. In the S-IVB vehicle, full-open venting (latched open) also is used during $LH_2$ tank safing following propellant depletion (ref. 73).

For the loading of storable propellants, the vent valves are sized to accommodate a specified loading rate with a specified suppression pressure being maintained on the propellants.

Actuation. – Vent valves may be actuated by handwheels, levers, solenoids, electric motors, diaphragms, or cylinders. The final choice depends on the forces required, power available, need for remote control, response characteristics, contamination sensitivity, maintenance requirements, cost, available space, and weight (ref. 43). On small storable-propellant systems where venting is necessary only during propellant loading, handwheel or lever-operated vent valves are used extensively. In cryogenic-propellant venting systems, remotely actuated vent valves normally are used. These remotely controlled valves generally are pneumatically actuated by an actuator (ref. 90) that is controlled by the flight programmer or by a signal from the ground controller. The controlling actuator may be either an integral part of the vent valve or a separate device pneumatically linked to the vent valve (ref. 90).

In cryogenic-propellant systems, a frequent problem is the freezing of moisture in the vent valve pneumatic-actuator area or in the valve poppet area, the valve thereby being rendered inoperative. The moisture often is introduced by the control gas or by the surrounding air. To minimize this problem, the control gas is dried by a desiccant or other means to decrease its dewpoint, and a purge is utilized to keep moisture from entering the vent valve through the venting duct. Check valves at the actuator vent port also are used to prevent cryopumping in the actuator areas.

#### 2.2.2.4.2 Relief Valves

In most tank pressurization systems, relief valves (ref. 60) are primarily safety devices that function only under abnormal or emergency over-pressurization conditions. Under emergency conditions the valves must always function to relieve the excessive pressure levels. Frequently, there are no alternate methods to relieve the system, especially in time to prevent system rupture.

Relief valves often are installed with the inlet port directly exposed to the pressure source. For example, the relief valve may be installed in the pressurization line between a check valve and a propellant tank to limit pressurization of the tank in the event of regulator failure in the open position, regulator seat leakage, or excessive temperature rise in the propellant tank during pressure lockup periods. When relief-valve leakage is undesirable from the standpoint of either pressurization-fluid management or propellant-vapor hazard, the relief valve may be isolated from the propellant tank ullage by incorporating a burst disk at the valve inlet. Under normal system operating conditions, operation of the relief valve is not required, and the burst disk maintains leak-tight system integrity. The relief valve is subject to operation only after rupture of the burst disk, which usually is designed to occur within the system relief-pressure range. Figures 8 and 10 illustrate typical system installations.

Frequently, relief valves are made integral with pressure regulators (pressure-level modulating control devices) or vent valves (contolled or programmed pressure-limiting devices). However, the automatic pressure-limiting function of the relief valve remains unchanged.

Problems related to relief valves are leakage, slow response, failure to reseat, and failure to open. These and other problems are treated in reference 60.

#### 2.2.2.4.3 Check Valves

A check valve is a fluid-flow control device that permits free flow in one direction and prevents or restricts flow in the opposite direction (ref. 60). In pressurization systems, check valves are also employed to isolate upstream components from propellant vapors. In hypergolic-propellant systems, check valves installed in common pressurization lines lessen the potential for hazardous mixing of propellants. Typical check-valve installations are shown in figures 8, 9, and 10.

In spite of their relative simplicity, check valves frequently are one of the more troublesome components in pressurization systems. Chatter, closing time, contamination, and other check valve operational problems are described in reference 60. The isolating function of the check valve establishes a general requirement for meeting stringent leakage requirements.

System requirements often dictate check valves with low cracking pressure; this feature in the valve often does not allow for sufficient force in the check direction to ensure consistent seating. Excessive internal leakage in the reverse (checked) flow direction is the failure mode most frequently encountered with check valves (ref. 91). When selecting the poppet seal material and design, the designer must consider internal leakage, compatibility, flow resistance, duty cycle, and the predicted environmental conditions (ref. 60). Series or series-parallel (quad-redundant) arrangements of check valves (fig. 9) are often employed to provide the redundancy necessary to offset failure modes.

#### 2.2.2.4.4 Isolation Valves

An isolation valve is a two-way control valve used to isolate the pressurant supply from the downstream pressurization system. "Two-way" solenoid valves are most commonly used in this capacity; however, explosive-actuated shear-disk valves also have been employed when no pressurant leakage is permissible over long periods of system inactivity. Figures 8 and 9 illustrate typical isolation-valve installations.

During long-term storage of systems under pressure, the normally closed isolation valves prevent over-pressurization of the propellant tank in the event of excess regulator leakage. Since the solenoid-operated valve is a reusable component, a single valve can provide the same function during inactive mission periods between engine firings. On the other hand, the explosive-actuated valve is normally a single-operation component; hence, additional valves are required for repeat isolation of the pressurant supply. For extended mission duration and a limited number of engine restarts, as in the Mariner '71 spacecraft (ref. 83) and certain other small spacecraft, an assembly of explosive-actuated valves is used to provide positive valve sealing and isolation of the pressurant supply. Figure 16 presents an arrangement of explosive-actuated valves that provides the desired repeat-isolation capability (e.g., for multiple engine starts). Each engine start involves the actuation of a normally closed valve, and each shutdown, the actuation of a normally open valve. The actuations are executed in succession, starting from the regulator end of the circuit. Thus, any failed valve can readily be bypassed by activating the following one for the same function. In any tradeoff study between explosive-actuated and solenoid-operated isolation valves, it should be noted that the high-pressure, high-capacity, low-leakage, pilot-operated solenoid valves presently available may not be as reliable as the explosive type.

The explosive-actuated valve is a single-operation device, but it is subject to several failure modes: (a) injection of metal particles into the fluid flow, (b) leakage of the combustion gas from the cartridge (squib) into the fluid flow, (c) high-velocity ejection of the cartridge closure as a result of failure of the threads, and (d) failure to actuate on command. The latter problem is overcome by utlization of the explosive-valve assembly illustrated in figure 16. Additional information on explosive valves may be found in reference 60.

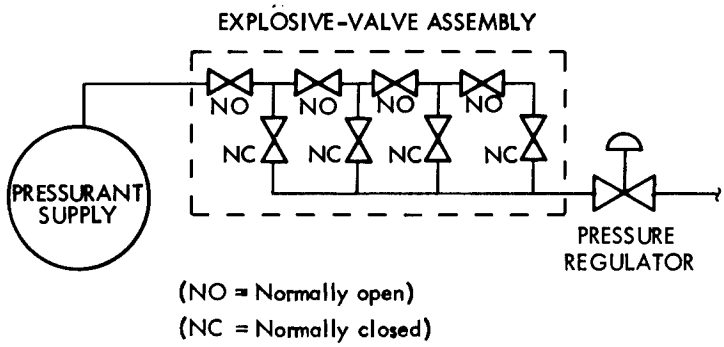


Figure 16. - Arrangement of explosive-actuated valves for multiple engine starts.

For the reusable solenoid-operated valves, one of the most serious failure modes involves seizure of the armature in the coil housing, the result being an inoperative valve. This condition normally is initiated by corrosion or fretting of metal-to-metal mating surfaces under vibration, followed by galling and ultimate seizure under actuation. In most instances, this problem may be resolved by the use of flexure mounting of the moving element to remove the scrubbing action and by the addition of nonmetallic (polymeric) guide elements to the armature to prevent metal-to-metal contact. However, the most common failure of solenoid-operated valves is internal leakage.

### 2.2.2.5 PRESSURANT HEAT EXCHANGERS

A heat exchanger is a device that heats or cools a fluid by transferring heat between the fluid and a heat source or heat sink. In a pressurization system, a heat exchanger that warms and expands the pressurant gas can thereby provide the desired gas pressure with less gas mass. Some vehicles utilize a heat exchanger because the heat source is readily available and the additional system weight penalty is small. Nonetheless, the addition of a heat exchanger to a pressurization system does result in a weight penalty and adds an additional complexity to system tradeoff studies. Not all vehicles require a heat exchanger; in particular, many of the pressurization systems associated with small spacecraft do not require one. Even some vehicles that have a heat exchanger may not require one for all applications. An example is the helium pressurant system used in the S-IVB to pressurize the oxygen-tank ullage. The gas is stored in spheres that are submerged in the hydrogen propellant at approximately 43°R. In the current design, the gas is routed through a heat exchanger to expand it prior to its pressurizing the oxygen tank ullage; however, the gas could be routed through the oxygen propellant (163°R) and into the ullage, or the gas could be injected into the oxygen propellant and permitted to rise through the propellant into the ullage area.

There are many types of heat exchangers; however, the shell-and-tube type is the most commonly used for aerospace pressurization systems. Figure 17 illustrates a shell-and-tube heat exchanger (4 coils) typical of the type used to vaporize liquid cryogenic propellants for evaporated-propellant pressurization. A common heat source for a heat exchanger is the hot exhaust gas from the turbine. Turbine-exhaust heat exchangers have been used on the stages in the Saturn V vehicle to vaporize liquid oxygen and to expand gaseous helium for pressurization; heat exchangers on the Titan vehicles vaporize liquid $N_2O_4$ for use as pressurant. In the Apollo SPS, the propellant is used in a heat exchanger to warm the relatively cold gaseous helium pressurant (fig. 18).

For fuel-tank pressurization on the Saturn S-II and S-IVB stages, gaseous hydrogen is extracted from the engine regenerative cooling jacket for mainstage pressurization of the hydrogen tank, thus eliminating the need for a separate heat exchanger. The amount required for tank pressurization is small in comparison with the total hydrogen flow through the engine regenerative cooling jacket; therefore, the temperature and pressure of the tapoff gas depend almost entirely on the performance of the cooling jacket. Because of the small volume tapped off and the relatively stable flow and temperature conditions during engine firing, problems of startup, heat-transfer degradation, flow capacity, and flow stability do not occur in the hydrogen system as they often do in liquid-oxygen or inert-gas heat exchangers.

#### 2.2.2.5.1 Startup

In an evaporated-propellant pressurant system such as that used for liquid oxygen on the S-II stage, it is necessary for the engine gas generator to be started and generate exhaust gases in sufficient quantity to provide the heat source for the heat exchanger before the evaporative process is initiated (fig. 10). A check valve is incorporated upstream of the heat exchanger to delay propellant flow into the heat exchanger and also to isolate the heat exchanger from the liquid-oxygen-pump bleed during the initial phase of engine startup (ref. 5). Therefore, the pressurization line and the heat exchanger initially are free of any oxygen propellant. When the oxygen-pump discharge pressure has increased to a sufficient level (75 to 100 psi), the check valve opens and allows liquid to flow into the heat exchanger. Thus, the valve prevents the very low flows that might flash and blow gas back into the pump. Also, the check valve minimizes the pressurant flow surge into the ullage and the thermal shock to the heat exchanger as the propellant is introduced into the heat exchanger.

The fuel/helium heat exchanger of the Apollo LEM descent stage (fig. 9) was subject to startup problems during development. During startup, the heat-transfer process within the heat exchanger caused the fuel to freeze. On the basis of analysis and tests, the heat

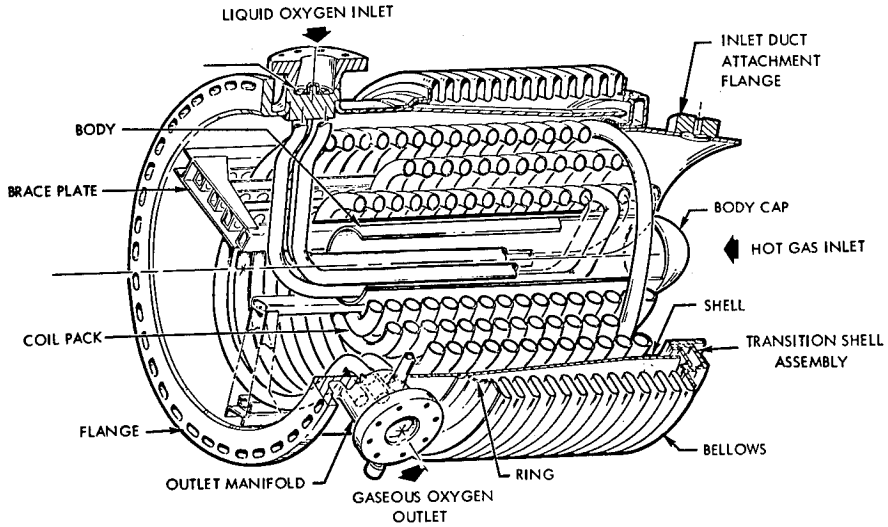


Figure 17. - Shell-and-tube heat exchanger (J-2 engine).

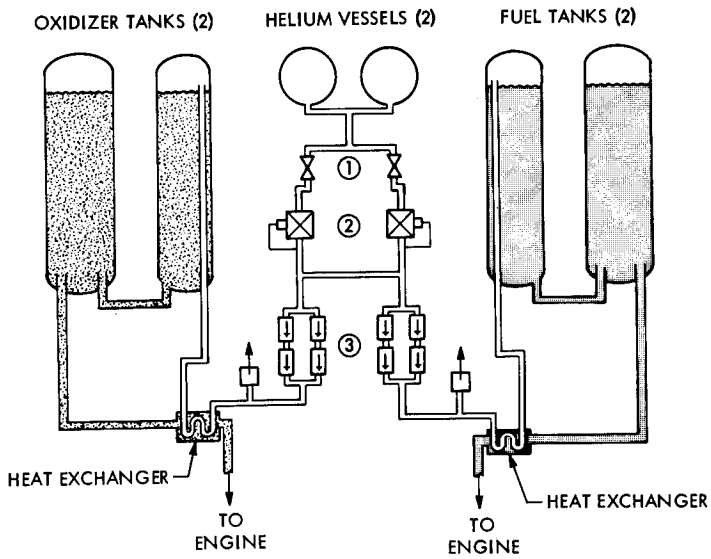


① SOLENOID VALVES
② REGULATORS
③ CHECK VALVES

Figure 18. - Schematic of pressurization system for Apollo Service Propulsion System.

exchanger fluid flowrates were modified such that the fuel would flow through the heat exchanger without freezing and yet heat the helium gas to an acceptable temperature.

#### 2.2.2.5.2 Heat-Transfer Stability

Effective heat-exchanger design for pressurization systems involves maintaining the overall (heat source to pressurant) heat-transfer coefficient within acceptable limits throughout the service life of the system. The magnitude of the overall coefficient is a function of the heat-exchanger physical design (materials, fluid velocities, etc.) as well as the thermodynamic properties of the pressurant (sec. 2.1.3.1) and the heat-source fluid.

If the heat-source fluid (e.g., turbine exhaust gas) consists of the combustion products of an oxidizer and a hydrocarbon fuel such as RP-1, it contains a large percentage of condensible or reducible carbon. To an extent that depends on the temperature of the heat-exchanger tube wall, a thin layer of carbon (soot or coke) may be deposited on the tube wall. This coating represents an additional resistance to the heat flow and results in decreased heat-exchanger performance. For example, it was observed in tests on the F-1 engine heat exchanger that the overall heat-transfer coefficient and the heat-exchanger capacity dropped gradually with the operating duration (ref. 92). Investigation revealed that increase of the liquid-oxygen (pressurant) flowrate lowered the tube-wall temperature of the heat-source side to the point ($< 390°R$, the triple point of $CO_2$) where carbon deposition occurred. The overall effect of such a coating is called the fouling resistance (or fouling factor) and becomes a part of the system thermal resistances that make up the overall heat-transfer coefficient. Fouling factors for heat-exchanger design are obtained experimentally by determining the overall coefficient for clean and dirty heat-exchanger conditions.

Another potential problem with low temperatures of the tube wall is the clogging of flow passages by freezing of the water vapor contained in the turbine exhaust gases generated from burning oxygen and hydrogen. This condition occurs, depending on the pressure, when the wall temperatures are below the triple point of water. Proper heat-exchanger design usually entails balancing the heat-transfer film coefficient on the pressurant side against that on the heat-source side so as to attain the desired tube-wall temperature. The coefficients usually are adjusted by changing the geometry to change the flow velocity of the respective fluids.

#### 2.2.2.5.3 Flow Capacity

The heat-exchanger capacity range is the range of stable pressurant volumetric flowrates that the heat exchanger can handle. The heat-exchanger critical flow capacity is that point in system performance where the pressurant volumetric rate is at a maximum and an increase

in pressurant mass flowrate produces a decrease in pressurant volumetric flowrate; that is, the system exhibits a critical-flow-capacity point when

$$\frac{\partial Q}{\partial \dot{w}} = 0 \tag{16}$$

where

$Q$ = pressurant volumetric flowrate, $ft^3/sec$

$\dot{w}$ = pressurant mass flowrate, lbm/sec

When a heat-exchanger system is operated in a flow range beyond its critical-flow-capacity point, the ullage pressure may drop with increased pressurant mass flowrate. This condition is further aggravated when the engine mixture ratio is decreased, because the temperature and flowrate of the turbine exhaust gas typically decrease (ref. 93).

Figure 19 shows that the heat exchanger for the J-2 engine (used on Saturn S-II and S-IVB stages) has a critical-flow-capacity point within its design flow range. The Saturn S-II pressurization-system designers were aware of this phenomenon and attempted to operate within the flow range where an increase in mass rate resulted in an increase in volumetric rate. The orifice in the S-II mainstage oxygen pressurization system was thus designed with the engine-heat-exchanger critical-capacity point when all five engines were operating as one of its design parameters. By contrast, the developmental J-2S engine (if available) would have provided performance free of critical-point problems, because the critical point occurred at flowrates above the maximum operating point (fig. 19).

#### 2.2.2.5.4 Flow Stability

A heat-exchanger system is said to be stable when (1) its measured outlet pressure and temperature do not vary more than ± 2 percent from nominal value and (2) the frequencies of oscillation are relatively constant at a given mass flowrate (ref. 94).

Instability in boiling flow systems is a frequent problem. Efforts to determine its causes and describe it mathematically have not been successful because of the complex coupling between vapor generation and hydraulic phenomena, including time lags, slip velocities between phases, and geometric distribution of the phases. The frequencies of instability induced by vaporization or by rapid density change without phase change range from about 5 Hz to about 10 kHz (ref. 95).

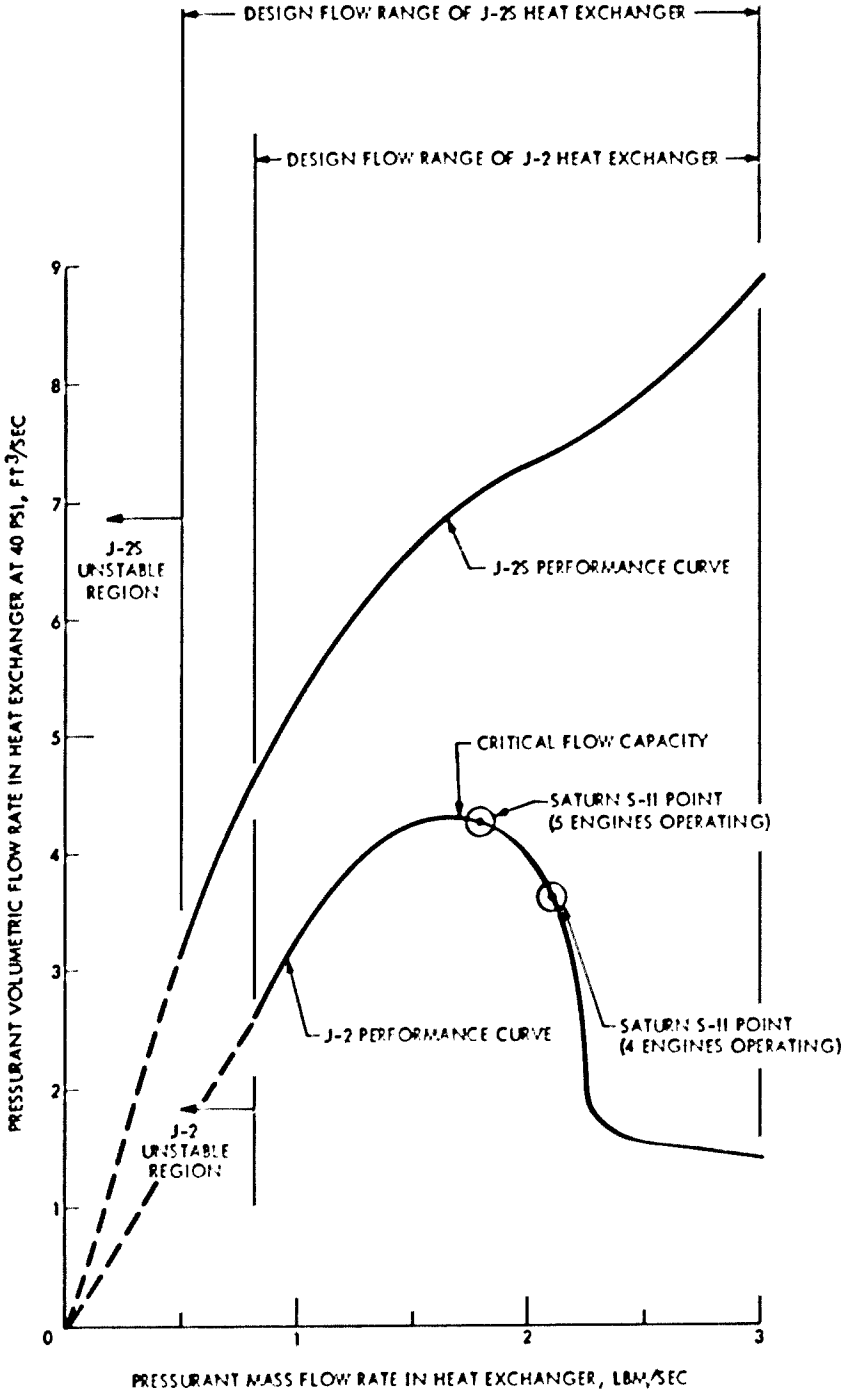


Figure 19. - Flow-capacity graphs for the J-2 and J-2S heat exchangers.

Low-frequency flow oscillations have occurred when a LOX heat exchanger was operated at low pressurant flowrates (ref. 96). These flow oscillations occur in the tubes at low fluid velocities and are believed to be induced by forced convective heating of the fluid, which then undergoes large changes of density from the tube inlet to the outlet (ref. 97). The phenomenon does not seem to be as pronounced with helium gas as with vaporized liquid oxygen, presumably due to the narrower range of density change in helium (ref. 96).

The flow-oscillation problem usually is circumvented by arranging the heat-exchanger coil in two sections in series. The preheater section, having tubes of smaller flow area, provides stability at low flowrates by maintaining a high fluid velocity until the fluid has passed through the temperature range of maximum density change. The superheater section, consisting of larger tubes and reduced fluid velocity, provides a high heat flux to raise the fluid temperature to the design point.

### 2.2.2.6 PRESSURANT DISTRIBUTORS

A pressurant distributor is a passive component that spreads the gas flow entering the tank ullage space into a definite pattern. The flow pattern may cause the incoming pressurant kinetic energy to (1) be dissipated and not mix with existing ullage gases or (2) form a vortex and induce gas mixing. When the gas flow pattern dissipates the incoming pressurant kinetic energy, the distributor is known as a gas diffuser. The gas diffuser is installed inside the tank near the top of the forward bulkhead, and thus minimizes any disturbances to the liquid-gas interface. A diffuser usually consists of a number of screened or perforated baffles arranged in series (ref. 72).

Although a simple passive component, the gas distributor has been subject to development and operational problems. Flow-induced acoustical problems occurred during the development of the gas diffusers for the S-IC oxidizer and fuel tanks; vibration and fatigue problems occurred during the development of the S-II oxidizer-tank gas diffuser. In each case, these problems were eliminated by redesigning the component to strengthen it.

For propellant tanks without positive-expulsion devices, the gas distributor must be sized and shaped to minimize the propellant surface disturbances that can occur during repressurization in a low-gravity field. Successful designs have included toroidal distributors and distributors that aimed the gas flow at the tank wall. In the S-IVB and Centaur stages, propellant settling prior to injection of the pressurant into the tank was used as a means of overcoming low-gravity effects on propellant location; in addition, in both stages the gas diffuser was made toroidal to minimize propellant surface distrubance.

In many of the large pump-fed (booster) propulsion systems, the gas is introduced into the tank at temperatures higher than the propellant temperature. Therefore, any heat and mass

transfer through mixing or fluid disturbances can result in undue heating of the propellant and cooling of the ullage gas. In these cases, the gas distributor is used to diffuse the pressurant so that a stratified temperature profile in the ullage gas is obtained. The benefits of temperature stratification are discussed in section 2.3.1.2.

Mixing of ullage gas and incoming pressurant gas is sometimes desired when ullage pressure rise is not wanted during a subsequent quiescent period (regulator lockup). This is particularly true with small pressure-fed propulsion systems (e.g., a pulsing RCS), where ullage pressure must be maintained above a minimum level and the normal operating level is not much higher. Gas impingement or gas mixing also may be required in specific applications where heat transfer to the propellant or other heat sink is desired to preclude overheating of the tank walls by a hot pressurant. The gas distributor for these systems may be a simple tube or duct exit port, a flow restrictor, or a sophisticated vortex tube.

### 2.2.2.7 ANCILLARY COMPONENTS

Other components or hardware elements that make up the pressurization system are lines, disconnects and couplings, seals, filters, and measurement transducers.

Lines. – The primary function of the lines in the pressurization system is to transport the pressurant from its source to the system components (i.e., the pressure regulator, check valve, etc.) and from these components to the ullage of the propellant tank without producing excessive loss of gas pressure in the lines or excessive loss of gas mass through leakage at the joints. Pressure loss of the gas is caused by (1) friction in the lines, (2) bends in the lines, and (3) the increased velocity of the gas due to pickup of heat as it flows through the lines. The analytical techniques that handle these problems are described in references 43, 63, and 98.

The cross-sectional shape of the line may be any geometric form, but the shape almost universally used is the circle. Typically, flanged, bolted connections are used on the ends of lines with large diameters ($\geq$ 1 in.) but have been used in lines with diameters as small as ¼ in. Flared-tube fittings and threaded connectors usually are employed on lines with a diameter of 1½ in. or less. However, spacecraft designers are now attempting to eliminate static-seal connections and use in-place welding or brazing of the joints wherever possible (ref. 68). The ATS spacecraft, for example, has brazed line connections. For additional information on lines, consult reference 98.

Disconnects and couplings. – Disconnects and couplings provide interface connections of fluid lines between vehicle systems and ground equipment or between stages on the vehicle. Disconnects are used in fluid systems to provide rapid or easy connection of lines and to protect the system from entry of contamination; they can be disconnected remotely. The

coupling or decoupling operation normally requires less than 1 sec and is executed by a simple sliding or rotary motion of the coupling ring. Examples of disconnects that are remotely disengaged are those on the Saturn vehicle by which vehicle fluid lines are connected to GSE by the umbilical lines of the launch tower.

A coupling is a manually-actuated mechanical connector that requires more than a few seconds for actuation (ref. 68). Quick disconnects have been used for cryogenic propellant-tank vent systems, while the coupling has been a popular choice for earth-storable propellant-tank vent systems.

Detailed information on disconnects and couplings and problems with these devices may be found in references 43 and 68.

Seals. – Seals are elements within a disconnect or coupling that prevent leakage of the fluid being transported. This type of seal is known as a static seal. Static seals fall within two groups:

(1) Elastomer O-rings or molded-in-place seals for systems wherein the temperature is within 380° to 960°R and wherein the seal material is compatible with the propellant vapor and pressurant.

(2) Metal pressure-assisted or diametral seals with either soft plating or Teflon coating (depending on the environment) for temperature extremes (hot gas to cryogenic).

The elastomer seal is the simplest type, is most reliable, and is inexpensive. This seal is generally the first choice if compatible with the environment. The metal pressure-assisted seal is the most common choice for cryogenic and hot-gas systems. For additional information on static seals, consult reference 68.

Filters. – A filter is a device in a fluid system that controls contamination by trapping particles entrained in the fluid. The system performance requirement for a filter often is expressed in terms of the size of the largest particle that can be tolerated in the fluid downstream of the filter under all applicable system conditions. This performance characteristic is a measure of the "degree of protection" offered by the filter and is a direct function of the pore-size distribution of the filter medium and the initial cleanliness level of the filter.

A penalty in total system pressure loss must be tolerated in order to provide the protection afforded by a filter during the vehicle mission. This penalty may be minimal if the filter remains clean, but can increase significantly as the filter becomes clogged and approaches its limit of contaminant capacity. This performance characteristic is a measure of the useful service life offered by the filter and is a function of the filter configuration and design.

Degree of protection and contaminant capacity of a filter are mutually opposing characteristics, in that the finer the filter rating the shorter the service life it can provide within a given envelope size.

Detailed information on filters may be found in references 43 and 98.

Measurement transducers. – The principle measurement transducers used in pressurization systems are temperature and pressure transducers. Many types of pressure and temperature measurements may be applicable to pressurization system performance. General information as to measurement type may be found in the literature (e.g., ref. 43); a survey of instruments and their characteristics is presented in reference 99.

## 2.3 DESIGN EVALUATION

In the final phase of pressurization system design, the performance of the complete integrated system is evaluated and possible problems are examined, special attention being given to the effects of heat transfer and mass transfer and to system dynamics.

### 2.3.1 Heat-Transfer Effects

Heat transfer is the flow of thermal energy between and within material bodies as a result of a temperature difference. Heat can be transferred by conduction, convection, radiation, or any combination of these processes. Heat transfer among the propellant, the pressurant, and the tank wall plays an important role in the pressurization system performance. Among the effects of heat transfer are thermal imbalance that results in propellant boiling or freezing, propellant and pressurant stratification, and temperature gradients in system components.

#### 2.3.1.1 THERMAL CONTROL

In pressurization system design, thermal control is the process of achieving an acceptable degree of thermal equilibrium among the system gases, propellants, tank structure, hardware components, and the anticipated environment. A variety of methods is used for thermal control.

In cryogenic-propellant systems, the common bulkhead and tank wall insulation are designed to minimize heat transfer or produce a thermal balance that will limit venting to the tank containing propellant with the lowest boiling temperature. For example, to maintain the LOX tank for the S-IVB stage in thermal equilibrium, the common bulkhead is designed to transfer heat from the LOX tank to the $LH_2$ tank at a rate approximately equal

to the rate at which heat is transferred into the LOX tank from the environment through the aft bulkhead. Thus, venting of the S-IVB LOX tank is minimized.

In the Centaur vehicle (ref. 4), the common bulkhead consists of a structural bulkhead and an insulation bulkhead separated by plastic mesh and fiberglass mat insulation. The space between the bulkheads is filled with gaseous nitrogen prior to tanking. A vacuum is formed when the trapped nitrogen condenses after the cryogenic propellants are loaded.

For most earth-storable systems, the problem is the same as that with the cryogenics: prevention of excessive boiloff of propellants. Usually, adequate control of propellant temperature is achieved with passive systems such as insulation or shadow shields or both. In a few earth-storable systems (i.e., those intended for missions to Mars and beyond), the problem is to keep the propellant from freezing. For this purpose, heaters (electric or radioisotope) are used to maintain the propellant feedlines and tanks above the temperature at which the propellant will freeze (see fig. 14).

### 2.3.1.2 VARIATION IN PRESSURANT TEMPERATURE

In the design of any pressurization system, a major analytical effort involves the prediction of the temperature of the pressurant gas at various locations and mission times. The effort is motivated largely by the impact of temperature on gas density and thus on system total weight. Gas thermodynamic computations are the most important single function performed by the various computer programs for pressurization-system design. The programs account for change in gas temperature due to heat transfer and flow processes throughout the system.

In many small pressure-fed propulsion systems, the storable propellants, the pressurant, and the system hardware are at essentially ambient temperature. If the propellant expulsion takes place intermittently with sufficient "off" time, then an isothermal condition can be assumed to prevail. However, in some cases, the duty cycle may require long sustained engine firings. When this occurs, the pressurant temperatures in the propellant-tank ullage and storage vessel may drop considerably below the ambient temperature as a result of gas expansion with insufficient time to recover its temperature from heat transfer from the pressurization lines, tank, and propellants. The resulting lower pressure gives rise to various problems, the nature of which depends on the characteristics of the propulsion system and mission involved.

In vehicles such as spacecraft where the ullage-space heat transfer is minimal, the reduced gas pressure must be considered in the design (ref. 100), particularly if the long sustained engine firing extends to propellant depletion. The most frequent solution is simply to

provide additional gas to make up the difference. In stages such as cryogenic-propellant boosters where the heat transfer is not minimal, the temperature of the confined ullage gas will be increased by heating from the propellant and the tank wall. This increase can result in the ullage pressure rising above the regulator lockup pressure. In extreme cases, the ullage pressure rise can exceed the relief-valve setting and cause undue loss of gas. In addition, for pressure-fed propulsion systems, thruster operation outside the regulated pressure band may cause the thrust to shift beyond the allowable tolerance.

The pressurization system for the Apollo SPS includes a sophisticated technique for controlling the pressurant temperature during its expansion into tank ullage space (ref. 81). Figure 18 shows this system, which incorporates a helium/propellant heat exchanger in both fuel and oxidizer circuits. The heat exchange between the pressurant and the propellant causes the ullage gas temperature to remain close to the propellant temperature, thus reducing ullage-temperature excursions to a minimum.

In the larger pump-fed propulsion systems, temperature variations in the ullage are more a function of location and stratification. These systems usually are programmed for a single burn and are pressurized with a pressurant heated significantly above the propellant bulk temperatures, particularly in the case of cryogenic-propellant systems. The temperature of the ullage gas exhibits a stratified condition varying from the entering pressurant temperature at the top of the tank to the propellant temperature at the gas/liquid interface. This temperature stratification is modified by heating or cooling at the tank wall and upper bulkhead. In almost all cases, stratification of ullage gas temperature is desired because it reduces heat transfer to the propellant while maintaining a high effective pressurant temperature, thus requiring less gas mass. Fluid distrubances (e.g., propellant sloshing, impingement of the incoming pressurant flow) tend to reduce the temperature stratification and can adversely affect tank venting and the pressurant weight requirement.

### 2.3.1.3 STRATIFICATION OF PROPELLANT TEMPERATURE

The propellant temperature varies over the length of the tank as a result of convective heating during propellant loading and ground-hold operations, aerodynamic heating during atmospheric flight, and interface heat transfer between the pressurant and vapor of the propellant. This thermal distribution, termed propellant temperature stratification, has been the subject of a great deal of study and experimental investigation (refs. 50, 101, and 102).

Although earth-storable propellants exhibit temperature stratification, this phenomenon is of concern principally with cryogenic propellants. For these propellants, it has been shown that pressurization with noncondensible gas at the same temperature as the propellant

successfully precludes any contribution to propellant temperature stratification from the gas/liquid interface (ref. 103).

When propellant temperature increases, the propellant density $\rho_p$ decreases and the propellant vapor pressure $P_v$ increases. Thus, to maintain a given pump inlet NPSH, the required pump inlet total pressure must increase. As was shown in equations (1) and (2), this increase must be provided by an increase in ullage pressure $P_u$ . Consequently, stratification of propellant temperature plays an important role in establishing the minimum required ullage pressure for a pump-fed propulsion system. In the case of liquid hydrogen, the propellant vapor pressure may vary as much as 4 psi/°R for the usual tank pressure ranges in pump-fed propulsion systems. Figure 20 shows the liquid-hydrogen temperature at the pump inlet during a flight of an S-II stage (ref. 104). The temperature curve exhibits a rapid rise near the end of the powered flight, indicating that the warmer layers of propellant had accumulated in a relatively shallow region near the gas/liquid interface.

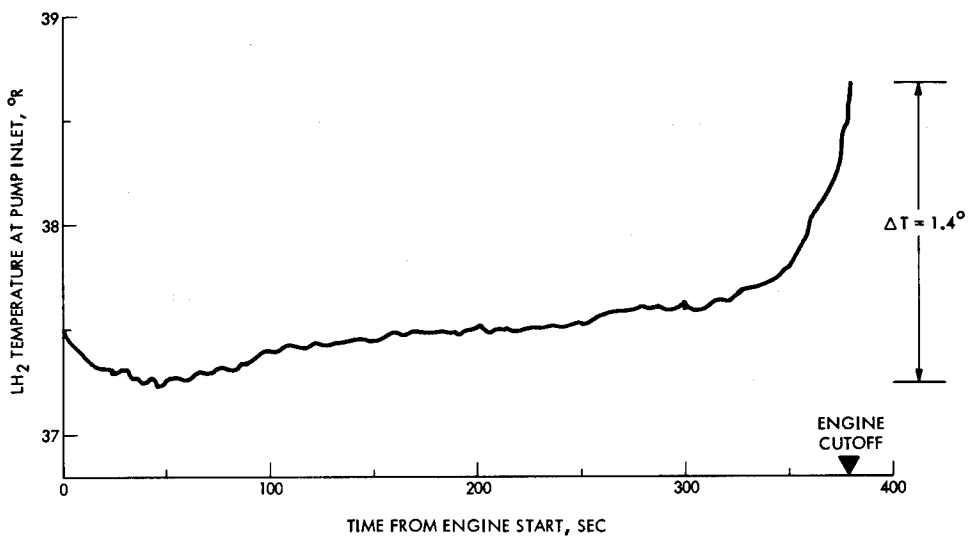


Figure 20. - Variation of $LH_2$ temperature at pump inlet during Saturn S-II flight (ref. 104).

Another phenomenon of component temperature was observed during the test program on the S-II vent/relief valves (ref. 106). To actuate the vent portion of the valve, much more gas was required when the valve actuator was at liquid-propellant temperature than when it was at ambient temperature. The apparent reasons were that (1) the actuator leak paths were larger at cryogenic temperatures, and (2) the ambient-temperature actuation gas was chilled by intimate contact with the actuator body; thus additional gas mass was required to maintain the desired pressure level. Because helium was used as the actuation gas, no problems of condensation occurred when the actuator was at liquid-hydrogen temperature. It was considered not cost-effective to change the valve design to reduce the size of the leak path.

### 2.3.1.4 TEMPERATURE GRADIENTS IN SYSTEM COMPONENTS

Normally, the component environment and system requirements determine the temperature gradient that the component must be designed to satisfy. Components can be designed to transfer heat from the fluid to an external environment or from one fluid to another (heat exchangers). These components usually have large internal temperature gradients. Rapid heat conduction can be an important design consideration in components that contain elastomeric seals or other mateials subject to damage by excessive temperature (ref. 43).

In components used with cryogenic fluids, it is normally desired to have a small temperature gradient within the component; thus, the temperature of the component assembly is approximately the same as that of the fluid medium. Insulation has been used to isolate the component assembly from its surroundings to prevent heat gain by convection and radiation (ref. 43). This practice helps to prevent loss of cryogenic fluid by evaporation, but should the component assembly have temperature-sensitive parts, the designer is faced with the choice of (1) replacing the elements with ones that are not temperature-sensitive, or (2) modifying the component design so that the critical level of the temperature-sensitive part is not reached.

Cryopumping has been observed as the result of the temperature gradient within the component. Cryopumping can occur in components in earth-storable-propellant systems (ref. 105) as well as in those in cryogenic-propellant systems. In cryogenic-propellant systems, check valves normally are installed on pneumatic actuator vent ports to prevent cryopumping of atmospheric gas into the actuator.

## 2.3.2 Mass-Transfer Effects

Mass transfer is the transport of a constituent of a fluid from a region of high concentration to a region of lower concentration. Mass transfer may occur within the gas or liquid phase and ceases to exist when the concentration gradient is zero.

Propellant and pressurization system performance are adversely affected by mass transfer between the propellants and the pressurants. The principal effects of such transfer are gas bubbles on the liquid side of the expulsion bladders and propellant on the gas side. In system design iterations, these effects are minimized through proper selection of pressurants, bladder materials and thicknesses, operating conditions, and hardware.

### 2.3.2.1 COUNTERPERMEATION

Counterpermeation is the migration of propellant vapor through a permeable expulsion device to the ullage side simultaneous with migration of the pressurant through the device to the propellant side. During storage of a propellant with a relatively high vapor pressure (e.g., $N_2O_4$) in a tank having a permeable expulsion device such as a bladder or diaphragm, a large volume of the pressurant that migrates through the bladder from the ullage side to the propellant side may remain undissolved in the form of bubbles. The gas bubbles subsequently remain entrapped on the liquid side until they are ingested by the engine. In the Gemini-5 system, ingestion of gas bubbles that had developed during ground hold was considered responsible for occasional erratic thruster performance during flight (ref. 107). The mechanism for gas bubble formation is described in reference 108.

It has been substantiated by tests with $N_2O_4$ propellant that pre-injecting $N_2O_4$ vapor into the ullage or mixing it with the pressurizing gas prevents gas bubbles from forming on the liquid side (ref. 109). This observation indicates that counterpermeation will be more pronounced with helium gas than with nitrogen gas and with high-vapor-pressure oxidizer (e.g., $N_2O_4$) than with the fuels. Also, if the ullage has to be pressurized during storage or ground hold, a high ullage pressure should be used to maintain a low ratio of vapor pressure to ullage pressure.

In the Lunar Orbiter propulsion system, Teflon bladders with aluminum foil laminates were used in an attempt to reduce gas permeation of the bladder (ref. 24). Thus far, this technique has not been widely accepted because of an associated reduction in bladder cycle life. Gas traps employing the surface-tension principle (ref. 41) were incorporated in the Mariner '71 Teflon-bladder tank to circumvent the gas-ingestion problem. In the MOL Program (ref. 110), separate pressurization systems were used for the oxidizer and fuel tanks, and pre-injection of a small amount of $N_2O_4$ into the $N_2O_4$-tank ullage was planned; the MOL program did not become operational, and the benefits of this design remain unproven.

Propellant trapped on the ullage side of a permeable expulsion device becomes unavailable to the engine. This amount can be a sizeable quantity, especially if cryopumping has occurred. Cryopumping causes propellant to be condensed on the ullage side of a permeable expulsion device; because of this condensation, propellant permeation is greatly in excess of that which would normally occur under uniform temperature conditions.

### 2.3.2.2 PRESSURANT DISSOLUTION IN PROPELLANT

The infiltration of pressurant bubbles into the propellant and the subsequent bubble collapse and diffusion of the gas throughout the propellant is known as gas dissolution in propellant. Without accompanying agitation or convection, the gas dissolution process is extremely slow, and it may be several days before a tank of propellant becomes saturated (ref. 111). Gas dissolution changes the propellant quality and subsequently affects the propulsion system performance in many ways.

The thickness of the gas-saturated propellant layer increases with time, and it is difficult to compensate for the variation during propellant loading. As the gas/propellant mixture flows through the feedlines to the engine, the decrease in pressure from the initial level at the tank liberates the gas, and two-phase fluid flow may occur. The gas when released from the saturated propellant changes the effective propellant density and mass flowrate to the engine. This change, in turn, affects the engine mixture ratio and performance if the gas solubilities in the oxidizer and the fuel are substantially different (e.g., nitrogen gas with $N_2O_4$ and MMH). Tests conducted with nitrogen-saturated propellants have demonstrated large shifts (13 percent) in engine mixture ratio and consequently large variations in thrust (ref. 112).

Startup response is critical in engine pulsing operation, as it has a direct bearing on the speed of response of the vehicle attitude control system and, hence, on propellant consumption and on engine stability (ref. 113). Dissolved gases in propellants have an adverse effect on the engine startup transient. As the gas-saturated propellant enters the empty engine injector manifold during startup, it degasses and generates a back pressure in the manifold that slows the filling of the manifold volume with the propellant. This effect plus foaming and unsteady jet flow from the flow restrictors cause ignition delays and combustion roughness. Gases released from saturated propellants also have an adverse effect on the response of engine thrust to throttling control.

In some instances, however, gas-saturated propellant has not been harmful to the performance of the propulsion system. For example, the dynamic performance of the Surveyor throttleable vernier engine using gas-saturated propellants was studied (ref. 114). Engine firing of 6 seconds in duration were conducted at various times during a 30-day storage period. Engine thrust response to the throttling command deteriorated with each engine operation as a result of the dissolved gas being released from the saturated propellant

within the propulsion system. Analyses showed that the degradation of engine dynamic response was not harmful and no modifications to the system were required. The principal reasons were that (1) the phenomenon was not structurally harmful and (2) the engine operated in the closed-loop mode, i.e., the engine would continue to operate until the desired velocity was obtained. A subsequent series of closed-loop propulsion tests substantiated the analytical conclusions by demonstrating that the vehicle attitude and velocity requirements of the Surveyor mission could be met even with gas-saturated propellants.

Low-frequency "chugging" is a combustion-instability phenomenon that often occurs when gas is dissolved in propellants. This instability stems from the coupling of the pressure oscillations in the feed system and the combustion process in the engine chamber. Reference 115 contains additional information on the phenomenon of gas-induced combustion chugging.

When gas is trapped in the propellant, the velocity of sound in the fluid in the feedline may be so reduced that multiple flow resonances can occur at relatively low frequencies, even with a feedline several feet long. With high sonic velocity in the fluid, the resonances occur at higher frequencies, where the resonance amplitudes are greatly attenuated because the damping from the injector and other system resistances becomes more effective (ref. 116). Another effect of reduced sonic velocity in the fluid in the line is an increase in the water-hammer effect at the valve inlet after the engine cutoff.

When a pressurant is very soluble in the propellant (e.g., nitrogen gas with $N_2O_4$ propellant), the mass loss through gas dissolution in the propellant can be significant for extended mission durations. When such ullage mass loss is likely to occur, the system has been demonstrated not to be adversely affected or has been modified prior to flight. Typical system modifications are the selection of a different pressurant, or the use of less permeable material for the tank bladder, or the use of a gas-liquid separator in the tank sump, or a combination of all these steps.

Some Agena vehicles had a bipropellant (oxidizer-$N_2O_4$; fuel-75% $N_2H_4$, 25% MMH) reaction control system, the SE-5 RCS, with a gaseous-nitrogen pressurization system for the tanks, which had Teflon bladders (ref. 117). During the 105-hour coast period following the second burn of the SE-5 RCS, an isothermal pressure decay of about 110 to 165 psi in the gaseous-nitrogen storage sphere was noted. The system was determined to be operating properly, but the cause of the additional required ullage mass was wrongly attributed to slow propellant leakage through the engine valves. Subsequent analysis revealed that the pressure decay in the storage sphere should have been attributed to ullage mass loss due to gas diffusion through the Teflon bladder and subsequent absorption of pressurant by the propellant (ref. 117). The system was not redesigned because the absorbed pressurant did not adversely affect the propulsion system performance.

## 2.3.3 System Dynamics

In the system-dynamics evaluation, factors considered are (1) the startup transients in the pressurization system and (2) dynamic interaction of the system with the other systems (e.g., coupling with the vehicle structure (pogo phenomenon)). In most instances, the dynamic coupling effects can be simulated only qualitatively by simplified analytical models. More complex approximations are necessary to correlate these factors quantitatively with the actual vehicle performance and to predict, during the design stage, potential dynamic interactions in any future systems. Resonances within the pressurization system do occur, but these can be damped by selective component positioning and by proper duct design. Duct resonances that couple with the resonant frequencies of a pressure regulator may require major redesign of the regulator if added damping in the sensing line of the regulator does not cure the problem.

### 2.3.3.1 STARTUP TRANSIENTS

In cryogenic-propellant pump-fed propulsion systems, feedline "water hammer" resulting from system activation does not occur, because the feedlines usually are filled with propellant at all times except possibly during extended periods of zero-g coasting. Even then, a low thrust gently settles the propellant back into the feedline prior to system pressurization. However, many earth-storable pressure-fed propulsion systems are configured with a propellant isolation valve (prevalve) near the tank outlet and a second propellant shutoff valve near the engine injector. The line between the two valves normally is void of propellant prior to the opening of the tank prevalve; sometimes this line is very long. The pressurization system is isolated from the ullage initially by an isolation valve or by a burst disk. If the pressurant isolation valve is opened before the propellant isolation valve, full regulated tank pressure is available to force the propellant quickly into the lines to the engine valves, the result being high fluid surge pressures and possible damage to the engine valves. This problem is avoided by proper actuation sequence.

The tank ullage volume of a pressure-fed propulsion system usually is charged with a low ullage pressure before launch. When the system is initially activated, the propellant isolation valve is actuated first to allow the propellant to fill the lines to the engine propellant valves under the low ullage pressure before the pressurant isolation valve is opened. For pump-fed propulsion systems, the ullage is prepressurized to a level designed to provide pressure above the minimum startup requirements at the time the propulsion system is activated (sec. 2.2.1.1). In addition, the feedlines usually are full of propellant with the isolation valves (prevalves) in the open position. Pressurization system activation begins with the start sequence of the engines. For vehicles that use evaporated propellants for mainstage pressurization (e.g., the Saturn S-II and S-IVB stages), ullage gas replenishment normally occurs after the engine has been started.

### 2.3.3.2 ULLAGE-COUPLED POGO

Most occurrences of pogo phenomena have been associated with longitudinal structural oscillations stemming from dynamic coupling of the elastic vehicle structure and the engine and the propellant feed system. This most common form of pogo, called engine-coupled pogo, has occurred to a significant degree in the Thor, Titan, and Saturn vehicles. A somewhat different type of pogo instability has occurred on most Atlas flights (refs. 118 and 119), although the results are essentially the same. Here the longitudinal oscillations occur near 5 Hz for about 20 to 30 sec immediately following liftoff. Dynamic analyses indicate that the engine system does not play a significant role in this case, the unstable coupling occurring through the operation of the pressure-regulation system for both the fuel and oxidizer tank ullage. Pogo of this type is referred to as ullage-coupled pogo, pneumatic-coupled pogo, or sometimes as "bloating".

When the ullage volume immediately after liftoff is small, the vehicle longitudinal vibrations cause unacceptable variations in tank ullage volume and pressure. This condition is further magnified by the variation of pressurant flow into the ullage as a result of regulator responding to the ullage-pressure oscillation through its sensing line. Acting as an effective axial force on the vehicle structure, this oscillating pressure provides the necessary potential for sustaining the pogo oscillation.

Measures for preventing pogo usually consist of changing the gains and phases of the various subsystems so that the closed-loop system includes adequate damping. In the case of ullage-coupled pogo, one readily applicable solution is to change the resistance and capacitance of the regulator sensing line; for example, the incorporation of an in-line double-plenum chamber in the pressure-regulator sense line will dampen the rapid surges of ullage pressure.

# 3. DESIGN CRITERIA and Recommended Practices

## 3.1 PRELIMINARY DESIGN

*The pressurization system shall be cost effective, meet mission performance and reliability goals, and have minimum weight consistent with other factors involved in the intended application.*

Base the system selection and initial design on (1) the given design parameters of ullage pressure, propellant properties, and duty cycle (sections 3.1.1.1 through 3.1.1.3) and (2) features of flight-proven pressurization system that best fit the given design parameters. The design selected should not conflict with the following given constraints:

- Program reliability goals
- Overall vehicle weight
- System size
- Cost
- Payload requirements
- Engine restart capability
- Variable thrust capability
- Propellant compatibility
- Propellant/pressurant compatibility
- Engine control accuracy

In evaluating pressurization system design and potential alternatives, use the methods of system-type selection described in section 3.1.2. Evaluate the cost effectiveness of the system candidates with a method like that in reference 1. Establish the initial design as described in section 3.1.3.

### 3.1.1 Basic Design Parameters

#### 3.1.1.1 TANK ULLAGE PRESSURE

*The design range of tank ullage pressure shall meet all prelaunch and flight ullage pressure requirements with acceptable margin but shall not be so wide as to require unnecessary tank wall thickness.*

For pump-fed propulsion systems, determine the minimum required ullage pressure from (1) the given pump inlet NPSH requirements, (2) the anticipated worst-case propellant

conditions, (3) calculated worst-case propellant feedline losses (eq. (5) and ref. 120), and (4) calculated minimum propellant hydrostatic pressure $P_{acc}$ (eq. (4)). Repeat this activity a sufficient number of times over the mission duration to obtain an adequate plot of ullage pressure vs time.

For pressure-fed propulsion systems, use the given engine inlet pressure requirements, anticipated worst-case propellant conditions, and calculated worst-case system pressure loss from tank outlet to engine inlet to determine the minimum required ullage pressure. Repeat the calculation at enough points in time over the mission to obtain an adequate pressure vs time profile.

For a pump-fed propulsion system, use a pressure-regulated system when the design ullage pressure tolerance band is less than 2 psi. Primarily consider a pressure-regulated ullage for a pressure-fed system when the engine-inlet pressure tolerance band is less than 50 psi.

To obtain an initial maximum design operating pressure for the propellant tank, multiply the maximum supplied ullage pressure by 1.1. Elements that may modify the initially calculated maximum tank operating pressure are propellant temperature, propellant hydrostatic head, propellant acquisition devices, tank positive expulsion devices, and tank slosh suppression devices. Use reference 7 or 121 to determine whether these factors modify the initially determined maximum tank operating pressure.

#### 3.1.1.1.1 Pump-Fed System

*In a pump-fed propulsion system, the tank ullage pressure shall be sufficient to preclude pump cavitation and inadequate pressure for tank or bulkhead structural stabilization.*

Use the logic illustrated in figure 1 and the factors listed in table IV as guides in proceeding with the determination of ullage-pressure design values. When the pump is not part of the engine, consult reference 122 for design considerations.

Determine the minimum required ullage pressure (sec. 3.1.1.1). Allow reasonable values for safety margin, flow-controller operating band, dead band (between flow-controller cutoff and relief-valve minimum cracking pressures), and relief-valve control band. For pressure-stabilized tanks, the minimum tank ullage pressure must be established at a level adequate to maintain tank structural integrity. Consult reference 7 or 121 for guidance.

#### 3.1.1.1.2 Pressure-Fed System

*In a pressure-fed propulsion system, the tank ullage pressure shall be sufficient to satisfy the engine inlet pressure requirement under all expected conditions.*

Use the logic illustrated in figure 2 as a guide in determining the required ullage pressure for a pressure-fed propulsion system. Consult the liquid rocket engine manual (ref. 123) for existing state-of-the-art pressure-fed engines and their coresponding thrust levels.

Conduct a system weight tradeoff study with both propellant-tank and pressurant-vessel pressures as independent parameters. Assume an adiabatic gas-blowdown process in the pressurant vessel for initial calculations, except for (1) short, widely spaced engine burns where the gas pressure drop is less than 5 percent of its initial value or (2) very low flows for long times (> 500 sec). For these conditions, assume an isothermal gas-expansion process. Use the analytical method presented in reference 7 to determine the gas mass requirements. The weight tradeoff curves shown in figure 3 should be used as a guide to the technique and content of the trade study. Obtain from engine system designers a predicted engine chamber pressure and pressure-drop allowance in the propellant feedlines.

### 3.1.1.2 PROPELLANT PROPERTIES

#### 3.1.1.2.1 Vapor Pressure

*The propellant vapor pressure shall not result in excessive ullage-gas venting, excessive ullage-pressure fluctuations, or excessive propellant permeation of a tank bladder.*

Determine the saturation properties of the propellant in order to arrive at a maximum allowable fluid temperature consistent with engine requirements such as pump NPSH. References 9, 10, and 11 provide thermodynamic properties of most propellants. Consider expected heat inputs to the propellant and determine if the liquid bulk temperature must be conditioned through the use of onboard heat sources or sinks or through venting of ullage gas that causes liquid boiloff and the lowering of propellant temperature.

Use the fluid saturation properties to determine the contribution of propellant vapor pressure and mass to total pressure requirements. This knowledge will aid in the selection of pressurization system type (sec. 3.1.2).

#### 3.1.1.2.2 Chemical Stability

*Propellants and their vapors, when exposed to the pressurants and the pressurization-system hardware at the temperature of and for the duration of the application, shall not generate chemical reactions that degrade the pressurization system performance or propellant performance.*

Conduct an investigation with respect to propellant chemical compatibility with proposed pressurants (sec. 3.1.3.1).

Use the following summary as an initial guide to compatibility characteristics of the popular propellants with common rocket materials and to storability and stability data:

- Liquid hydrogen and oxygen are compatible with stainless steel, nickel alloy, aluminum alloy, and Kel-F. In addition, liquid oxygen is compatible with copper and Teflon.

- Nitrogen tetroxide is compatible with aluminum, titanium, stainless steel, nickel alloy, and Teflon. Its stability is a function of temperature (ref. 9); its storability in the named materials is good as long as it is kept dry. Refer to available propellant manuals (refs. 10 and 11) for information on the storability of wet $N_2O_4$.

- Monomethylhydrazine and hydrazine are compatible with aluminum, 304 and 347 stainless steel, titanium, Teflon, Kel-F, and polyethylene. If kept from contact with air, MMH is stable at least to its normal boiling point (652.2°R); hydrazine is stable up to about 780°R. Avoid contact with copper, copper alloys, molybdenum, and iron oxide, as these metals can cause MMH and hydrazine to decompose or ignite.

- RP-1 is compatible with aluminum, steel, nickel alloys, copper, Teflon, Kel-F, and neoprene. It has good stability and storability up to its auto-ignition temperature (930°R).

References 10, 11, and 28 (tables 1-4) should be used as supplemental sources of data on material storability, stability, and compatibility.

The design should ensure that the tanks can be readily flushed, cleaned, passivated, and loaded without being contaminated. Components with large catalytic surface areas such as finely woven wire screens that cannot be thoroughly cleaned and decontaminated should be avoided. If surface-tension acquisition devices (refs. 3 and 10) are employed, primarily consider a woven-wire mesh design, especially if the hole diameter is smaller than 0.005 in. For holes larger than 0.005 in., a perforated-sheet configuration may be a possible alternate.

To minimize propellant decomposition and ullage pressure rise, avoid high storage temperatures. If the system has to be sterilized at high temperatures, consider sterilizing the system without propellants and pressurants and subsequently transferring the fluids through sterilized transfer systems. If propellants or pressurants must be included in the sterilization process of the spacecraft, provide sufficient tank strength to withstand the high pressures generated.

### 3.1.1.3 DUTY CYCLE

#### 3.1.1.3.1 Single Burn

*A pressurization system for a single-burn duty cycle shall utilize the predicted transient thermal conditions within the tank to ensure that the minimum amount of gas shall be required.*

Design to conserve weight by maintaining the ullage gas temperature at a maximum consistent with constraints such as safety and hardware operational temperature limits. To minimize the ullage gas mass, evaluate the possibility of heating the pressurant or superheating the propellant vapor prior to introducing the gas into the ullage space. To maintain a high average ullage gas temperature, use a gas distributor (see. 3.2.2.6) to prevent gas mixing disturbances. To further reduce ullage gas temperature decay due to mixing, employ baffles in the propellant tank to minimize propellant sloshing at the gas/liquid interface. Consult references 3 and 76 for baffle design for slosh suppression.

#### 3.1.1.3.2 Multiple Start

*A pressurization system for a multiple-start duty cycle shall provide adequate ullage pressure for the tank thermal conditions and gravity conditions predicted for each engine start and burn duration.*

For a pump-fed cryogenic-propellant propulsion system, make provisions for controlling propellant temperature (and corresponding vapor pressure) rise in keeping with NPSH requirements for restart. This control can be achieved by providing for overboard venting of the ullage gas (see. 3.2.1.4.2). During coast periods, this operation allows the lowering of liquid temperature by boiloff. With temperature and vapor pressure controlled, repressurization requirements can be met through the techniques presented in section 3.2.1.3.

For earth-storable propellants and a stored-gas pressurization system, thermally condition the pressurant prior to its entering the tank ullage, so that ullage pressure rise during coast periods due to relatively cold pressurant being heated to tank/propellant temperature is precluded.

#### 3.1.1.3.3 Pulsing Operation

*A pressurization system for a pulse-mode duty cycle shall have response characteristics consistent with that mode of engine operation.*

Obtain data on thruster responses required for pulsing operation from the engine supplier or engine handbook (ref. 123). The stored-inert-gas method of pressurization is recommended generally as the most direct method of providing quick-response capability. Whether the gas is stored in a storage vessel and pressure regulated or stored in the initial tank ullage volume and permitted to expand (blowdown mode) is determined by the design limits on engine inlet operating pressure. If the specific application warrants a different type of system, investigate evaporated-propellant or combustion-products systems, in which high-pressure gases are stored in an accumulator, which in turn meets the thruster response time requirements. Accumulator sizing should be consistent with thruster size and expected pulsing-sequence duration in conjunction with pressurant generation rates. For spacecraft wherein propellant tanks are not spin-stabilized, a positive-expulsion device such as a bladder is recommended for proper propellant orientation (ref. 3).

## 3.1.2 Selection of System Type

*The selection of system type shall identify a minimum-weight pressurization system that is consistent with the design constraints, cost limitations, and reliability goals of the application.*

Begin the selection process by obtaining a thorough definition and understanding of the constraints and requirements imposed on the design by its intended application. Supplement this information with propulsion-system physical data such as tank dimensions, initial ullage volume (if defined), materials, and temperature limitations on structure.

Judgment is a key element in the screening; premature elimination of any system variation may penalize vehicle performance. Therefore, the screening should be accomplished by a team of experienced designers and the results justified to management in reviews. It is recommended that tables VII and VIII, or ones similar to them, be used as a guide in evaluating the three basic systems for the application being considered. Pressurant/propellant compatibility problems should be considered the strongest reason for eliminating a system type, although judgments that a system type could not be competitive with respcet to weight or reliability for the application are acceptable if gross deficiencies are apparent. Primarily consider an inert-gas pressurization system for spacecraft.

If more than one system remains in contention after the screening, all should be the subject of detailed weight and reliability analyses. Calculate pressurant weight by use of a digital computer program that includes the heat- and mass-transfer effects pertinent to the

application. The programs of references 45 and 58 are recommended. Make system layouts to identify hardware requirements and provide sizing data for component weight estimates. Place emphasis on the volume and weight of any gas storage vessels. Estimate system reliability on the basis of the number of components and their individual reliability (either demonstrated or estimated). The system finally selected should be one that yields the best compromise in weight, reliability, and cost as each of these factors relates to the overall mission success.

### 3.1.2.1 INERT-GAS SYSTEM

*An inert-gas pressurization system shall have pressurant mass as well as storage-vessel volume and mass at a minimum consistent with the application; the design pressurant mass shall allow for leakage and gas dissolution.*

Generally, helium is recommended as the pressurant for inert gas systems because of its low molecular weight (MW = 4 lbm/lbm-mole). Consider other pressurants if specific characteristics of the application warrant.

Whatever pressurant is used, minimize the gas quantity by using the pressurant at the maximum temperature permissible within structural, component, and propellant limitations. Consideration should be given to maintaining the highest possible average ullage-gas temperature by minimizing heat transfer between the pressurant and the propellant and between the pressurant and tank walls.

Store the inert gas where the temperature is as low as possible, thereby maximizing the pressurant storage density. Consider concepts such as insulated vessels loaded cryogenically or vessels submerged in cryogenic propellants. (These vessels must be capable of high-pressure storage.) If the pressurant mass requirements are relatively high, as for a typical pressure-fed propulsion system, conduct a trade study similar to that illustrated by figure 3 to determine the optimum storage and ullage pressures. The effects of pressurant compressibility should be included in the trade study.

To be able to store the gas cold and use it warm, a pressurant thermal conditioning system should be utilized. If a heat exchanger or hot-gas supply is available with the engine, use it if possible. However, a separate gas generator or heat exchanger should be considered for repressurization and for optimization of system performance.

For all inert-gas systems, analytically determine the mass of pressurant gas lost through the phenomena of gas permeativity and gas solubility in propellant. Include this amount in the design pressurant mass. In addition, include in the design mass an amount for system leakage to the environment. For blowdown systems, no gas leakage to the environment is allowable. However, for gas systems with storage vessels, gas leakage to the environment is unavoidable. Unless otherwise specified, allow a pound of gas per year of vehicle service for all inert gases except helium; for helium, allow 0.2 lbm per year of vehicle service.

Select the pressurant on the basis of a tradeoff that includes all the factors above.

### 3.1.2.2 EVAPORATED PROPELLANT SYSTEM

*An evaporated-propellant pressurization system shall have gas mass at a minimum consistent with the application and shall meet response requirements without the need for excessive ullage volume.*

Minimize the evaporated-propellant pressurant requirements by injecting the pressurant at the maximum temperature allowable within structural, component, and propellant limitations. Minimize ullage-gas condensation and propellant stratification by limiting heat transfer to the bulk propellant (secs. 3.2.2.6 and 3.3.1.3).

Store the pressurant in liquid form in the main propellant tank whenever possible to eliminate storage vessel weight. Investigate the feasibility of using engine-supplied heat exchangers (sec. 2.2.2.5) to vaporize and superheat the pressurant. If thermal conditioning is not feasible, consider only propellants having sufficiently high vapor pressure to overcome system resistances and satisfy engine inlet requirements. Examples of propellants with high vapor pressures are ammonia, oxygen, and hydrogen.

If the proposed propellant has not been used in an evaporated-propellant system, the chemical stability of the evaporated propellant should be investigated to determine characteristics of the propellant during vaporization and superheating. Also, the compatibility of the propellant vapor with exposed materials should be determined (ref. 32).

To preclude severe decay of ullage pressure between vehicle liftoff and engine ignition and to minimize the ullage-pressure slump during the engine start transient, the addition of a ground prepressurization operation using a noncondensible fluid (e.g., cold helium) or a separate inflight pressurization system is recommended.

### 3.1.2.3 COMBUSTION-PRODUCTS SYSTEM

*A combustion-products pressurization system shall have gas mass at a minimum consistent with the application. The pressurant shall be at an acceptable temperature and shall be free of condensibles that may impair propulsion system operation.*

Before giving serious consideration to any combustion product as a pressurant source, establish its compatibility with the propellant and exposed materials. The temperature of the combustion products, when injected into the propellant tank, should be a maximum consistent with structural, component, and propellant requirements.

A trade table similar to that presented in reference 124, modified to include the specific combustion products systems being considered, should be prepared to facilitate comparison of this system with other system types.

## 3.1.3 Initial System Design

### 3.1.3.1 PRESSURANT-GAS EVALUATION

*The pressurant shall be compatible with the tank materials and the propellant and shall possess thermodynamic properties appropriate for the application.*

Use table X as a guide for pressurant selection. The handbooks on gas properties (refs. 7, 8, 9, 34, 36-38, and 42) should be used to evaluate the effects of the gas density, compressibility, solubility in propellants, permeativity through bladders, viscosity, and thermal conductivity for the range of temperatures and pressures of interest to the application. Consideration should be given to the method of gas transport and packaging that will preclude degradation or contamination of the pressurant.

Chemical compatibility. – Use inert gases or evaporated propellant when practical from other design standpoints. When it is desirable to use other types of pressurants, investigate thoroughly the chemical compatibility of the pressurant gas with the propellant that it will contact. Use table X as an initial guide to the compatibility of common pressurants with propellants (ref. 31).

Take care also to ensure that the pressurant and the materials that it may contact are compatible. Survey the literature on material compatibility. Oxygen, being a strong oxidizer, is especially likely to react with many materials used for seals, lubricants, cleaners, and other applications. Reference 32 lists a number of materials both compatible and incompatible with oxygen. Excessively expensive materials required for compatibility with a given pressurant may be cause for selection of a different gas. If compatibility information is not available, make suitable tests.

Density/Compressibility factor. – Maintain the pressurant density consistent with the design objectives of minimum total gas weight and minimum weight and volume for any gas storage tank. Use a gas whose compressibility factor has a minimum adverse effect on the pressurant storage volume and weight.

Pressures in the system should be a maximum in the storage vessels and a minimum in the ullage. If pressurants are to be stored, they should be maintained at as low a temperature as possible. If the propellant is cryogenic, consider the possibility of storage within the cryogenic-propellant tank. Provide for the introduction of the pressurant into the ullage at maximum permissible temperature. For either a cryogenic- or ambient-temperature storage

vessel, consider the addition of heat to the gas after it leaves the storage vessel but prior to its entering the tank ullage. For storage vessels not stored in a cryogenic-temperature environment, consider the addition of heat to the gas mass in the storage vessel. These guidelines should be followed in a manner consistent with the practical physical limitations of the system (sec. 3.1.2) and tank heat-transfer conditions (sec. 3.3.1).

Solubility. – The solubility of the selected pressurant gas should be a safe factor below the minimum allowable for the application. Use the calculation method presented in reference 36 and the gas solubility data available in the literature (e.g., ref. 38). For propellant tanks with a positive-expulsion device, evaluate the phenomenon of gas permeativity first and determine if sufficient pressurant would come in contact with the propellant to be a problem; if the propellant is $N_2O_4$ or IRFNA and prolonged exposure is anticipated, then use helium as the pressurant.

If nitrogen is used for liquid-oxygen tank prepressurization, conduct the pressurization at as fast a rate and as late as possible prior to boost to restrict the dissolved nitrogen to a shallow surface layer of the propellant. Predict the amount of dilution that will occur from surface agitation during prelaunch slosh and launch vibration. Determine if the diluted propellant will have an adverse effect on engine performance; if so, propulsion-system designers should consider the diluted layer as unusable propellant.

Permeativity. – For a propellant tank with a positive-expulsion device such as a bladder, calculate the amount of gas that would diffuse through the material to the propellant side during the vehicle misssion, using analytical methods like those in reference 108. If pressurant solubility in propellants is relatively low, gas permeativity may not be a problem, regardless of the calculated amount of gas in contact with the propellant. If a pressurant with relatively high permeativity and high solubility is selected because of other considerations, examine the use of gas separators to circumvent the problem of excessive gas in solution.

Viscosity. – Use gas viscosity as a means of controlling the system leakage rate through welds, joints, and other flow paths. Calculate the leakage rate through a flow path, using the techniques recommended in reference 40. Compare the calculated leakage with the allowed leakage to determine if alteration of the system or alternate pressurant selection is necessary. For a spacecraft, if no allowable leakage rate for the system is specified, use $1 \times 10^{-6}$ scc/sec of helium for allowable external leakage rates of fill and purge valves, tank shell, isolation valves, filters, engine valves, and transducers (ref. 125). For boosters and upper stages, the same allowable external leakage rate may be used if none is given for initial system evaluation. For these vehicles, a greater leakage rate may be permissible because of the shorter mission duration. Refer to previous flight-proven vehicles of similar design and application for additional information on permissible leakage rates.

Thermal conductivity/Joule-Thomson effect. – Select a pressurant whose thermal conductivity gives the desired heat-transfer effects in the ullage and, if applicable, in the pressurant heat exchanger. Evaluate gas thermal conductivity in conjunction with duration of regulator lockup periods for stored-gas systems. If projected pressurant waste would be excessive during lockup, selection of a gas with a lower thermal conductivity may be warranted.

Determine the gas temperature change (if any) during throttling (e.g., by a pressure regulator); then evaluate gas conditions downstream of the throttling device.

Cleanliness/Dryness. – Use reference 44 as a guide to maintaining and specifying gas cleanliness/dryness prior to usage. For stored pressurants, unless otherwise specified, specify that no more than 9 ppm of water vapor by volume is permitted in the gas.

#### 3.1.3.2 DESIGN APPROXIMATIONS

*The approximations made for initial system design shall provide values adequate for detail design and integration*

Use equations (10) through (15) for initial approximations of the required propellant tank pressures and volumes, ullage-gas masses, and volume, maximum operating pressure, and gas mass in the storage vessels. In calculating the gas mass to be stored, add some mass to allow for system leakage. Experience has shown that budgeting a system gas loss of one pound per year of mission for a nitrogen pressurant system has been a conservative assumption.

For more precise hand calculations of the propellant tank and storage vessel variables, use methods presented in reference 7. Ultimately, the gas mass requirements can be refined with use of computer programs like those of references 45, 49, 58, and 59.

## 3.2 DETAIL DESIGN AND INTEGRATION

### 3.2.1 Pressure Control Systems

#### 3.2.1.1 PREPRESSURIZATION

*The prepressurization gas pressure shall not decay excessively because of heat transfer prior to engine start*

If prepressurization is required, supply from a ground source a pressurant compatible with the propellant and tank materials. To minimize any ullage pressure decay prior to mainstage pressurization, thermally condition the prepressurizing gas to a temperature as close as

possible to the propellant temperature by (1) permitting the heat exchange between the propellant and ullage gas to occur prior to liftoff and continuously repressurizing the ullage during this time interval or (2) delivering the pressurant in a chilled condition to the tank ullage or (3) accomplishing both (1) and (2).

Pressure switches (used to actuate solenoid-operated control valves) should have operating pressure bands below those of the tank relief mode, thus avoiding unnecessary loss of pressurant. Size control valves, distribution lines, and flow-control orifices to prevent or minimize pressure surges imposed on the tanks, because these surges may cause structural damage.

For prepressurization system plumbing with unlined bellows, gimbal joints, or flexible hose, design the system such that the gas-flow Mach number is less than 0.25. Use the mathematical procedures outlined in reference 120 to determine the susceptibility of the bellows convolutions to failure from flow-induced vibration. If a problem exists, use the design improvements suggested in references 98 and 120.

Design the prepressurization system with a gas distributor at its ullage space entry point. Examine the possibility of using a common ullage-space entry point for the tank prepressurization systems for the mainstage pressurization system and for the vent/relief system, thus eliminating the need for more than one gas distributor and reducing the number of tank penetrations.

### 3.2.1.2 MAINSTAGE PRESSURIZATION

*The mainstage pressurization control system shall maintain ullage pressure at the levels and in the sequences required without incurring an unacceptable system weight penalty.*

Determine the permissible pressure control band for the mission. Special attention should be given to the blowdown mode for (1) a vehicle mission that has a low total impulse requirement, (2) a pressure-fed propulsion system where acceleration limits dictate a decreasing thrust profile, and (3) a pump-fed propulsion system where acceleration head increases to compensate for decrease in ullage pressure. A weight, cost, and reliability study should be undertaken before a decision is reached regarding the selection of this type of pressurization system. Eliminate the blowdown mode from consideration if ullage pressure decay during mainstage operation is not allowable.

If the pressure control band is large and if the engine system permits the supplied inlet pressure to vary within the limits of the control band, consider the use of passive flow control; however, overboard venting must be allowed, because such venting is probable with the passive flow-control system. For relatively narrow control bands, evaluate the use of a

pressure-switch system or pressure-regulated system. Use table XI as an aid in determining which control system best fits the particular design application. For control systems requiring a pressure sense point, design the system to sense ullage pressure.

If the mainstage pressurization system is not a blowdown system, and therefore has flow-control elements (regulator, solenoid valve, or flow restrictor), design the gas flow to be sonic through the element, with the maximum effective flow area of the element no greater than one-fourth of the inlet pipe area. For system performance evaluation, place a pressure and temperature transducer upstream of the flow-control element. For pressurization system plumbing with unlined bellows, flexible hoses, or gimbal joints, design the system such that the gas-flow Mach number is less than 0.25. Use the mathematical procedures outlined in reference 120 to determine the susceptibility of the bellows convolutions to flow-induced vibration failure. If a problem exists, use the design improvements described in references 98 and 120.

#### 3.2.1.2.1 Pressure-Regulated System

*A pressure-regulated system shall provide reliable control of ullage pressure within specified control bands without incurring excessive costs for development and procurement of components*

In pressure-fed and pump-fed propulsion systems, if pressurization is performed with an inert gas, a pressure-regulation system common to both fuel and oxidizer tanks should be considered, provided that both tanks require the same ullage-pressure level. Use check valves or other isolation means downstream of the regulator to prevent the oxidizer-tank ullage gas from mixing with the fuel-tank ullage gas. If the pressurant is not inert or if the ullage pressure requirements differ, use separate pressure-regulation systems.

To minimize ullage-pressure variations between static and dynamic pressurant flow conditions through the regulator, use a pressure regulator with external sensing (sec. 3.2.2.2). The sense line should connect the regulator control element to the tank ullage space. Evaluate a modulating-type pressure regulator (external sense) with a fail-open design and with the capability to be placed fully open via electrical stimulus regardless of tank pressure. During normal mainstage operations, the regulator flow area should be approximately half of its maximum opening.

If the tank relief valves are designed with an ambient sensing port and if the pressure-regulator design chosen requires a reference pressure for operation, investigate the possibility of having the reference point of the pressure regulator at ambient pressure.

Refer to section 3.2.2.2 of this monograph and to reference 60 for more detailed information on pressure-regulator selection and design.

#### 3.2.1.2.2 Pressure-Switch System

*A pressure-switch system shall have sufficient incremental steps to maintain ullage pressure within specified limits without excessive undershoot and overshoot.*

Determine the number of pressure bands required for the mission. Minimum required ullage pressure, relief-valve reseat pressure, propellant stratification, and propellant-utilization shift are factors that influence the number of required pressure bands. The number of series assemblies, flow-restrictor sizes, and overlapping pressure-switch actuation points should be established to minimize ullage pressure perturbations as the incremental flow paths are opened or closed. For each pressure band, design the pressure-switch system with maximum redundancy to increase reliability, because the weight penalty associated with this system is minimum.

The flow-control element should be a flow restrictor. For each flow restrictor, there should be two identical pneumatic pressure switches installed in parallel to control the position of the shutoff valve(s). Multiple electrical circuits (per switch) are recommended to enhance system reliability. In addition to a primary flow restrictor, include in the design a "booster" flow restrictor that increases the supplied pressurant mass should the flow demand exceed the primary-system capability. Unless otherwise specified, design the system such that pressurant will enter the tank should an electrical power failure occur.

#### 3.2.1.2.3 Passive System

*A passive flow-control system shall have flow capacity adequate to maintain ullage pressure within specified limits under all anticipated conditions.*

From pressurization computer programs, test results, or a combination of both, obtain the required pressure, temperature, and flowrate profiles of the pressurant into the ullage. When sizing a flow restrictor, consider the effects of gas expansion and heat transfer as the pressurant is routed from the flow restrictor to the tank ullage. Use the design information on flow-restrictor sizing obtainable from references 43, 63, and 64. Verify during ground tests of the propulsion system that the passive flow-control system is adequate to maintain the desired ullage-pressure band.

For gas flow systems where pressure loss is important, use a critical-flow venturi to minimize pressure loss through the flow restrictor. Reference 126 provides information on venturis.

For gas flow systems where pressure loss is not critical, primarily consider the use of nozzles (ref. 127). As an alternate, consider a round-edge orifice.

Should a commercial round-edge orifice that provides the required flow area be unavailable, make an orifice similar to the one shown in figure 13. Design the orifice so that the ratio of the inlet pipe area to the orifice effective flow area is not less than four. The orifice hole should be circular and centered within the pipe. Instrumentation ports should be located 2½ pipe diameters upstream and (if applicable) 8 pipe diameters downstream from the orifice plate (ref. 63).

#### 3.2.1.2.4 Blowdown System

*A blowdown system shall use available heat sources to increase the ullage pressure during inactive time periods of the propulsion system.*

Analyze the tank ullage-pressure requirements including dynamic head of the propellant to determine if a blowdown system is feasible for the entire mainstage periods, or for a portion of mainstage operation. Establish the pressurant requirement on the basis of total tank volume and terminal ullage pressure as dictated by either engine chamber pressure (in pressure-fed propulsion systems) or pump inlet NPSH requirements. Conduct a weight tradeoff study, using the maximum permissible supplied engine (or pump) inlet pressure as a constraint, to arrive at the optimum initial ullage pressure and volume and to assess the adequacy of ullage pressure levels throughout mainstage operation.

When multiple engine firings of significant duration are involved, the mission duty cycle should be taken into account to determine if enough time is available between maneuvers for sufficient ullage pressure recovery by pressurant warming, thereby minimizing pressurant requirements. If time between maneuvers is not adequate for desired pressure recovery, consider the use of heaters. Conversely, when system operation consists of a single engine firing to propellant depletion, the rapid continued increase in ullage volume causes the pressurant pressure and temperature to decrease continuously. This steady decrease could freeze the pressurant; therefore, suitable means for keeping the gas above freezing point should be provided (e.g., heaters).

For bipropellant systems wherein propellant densities are substantially different, the designer should balance the respective pressure variances to maintain acceptable ratios of oxidizer-to-fuel pressure. When storable propellants are used, the danger of propellant freezing as chilled pressurant is introduced must be considered.

### 3.2.1.3 REPRESSURIZATION

*The repressurization system shall be a minimum weight system that satisfies the engine restart requirements and the program reliability goals.*

A repressurization process is required when the tank thermal control (sec. 2.3.1.1) restricts the ullage pressure to a value less than that needed for engine restart. Review the mainstage

pressurization system and the ullage-gas/tank thermodynamics to evaluate means of reducing or eliminating the need for repressurization.

In a manner similar to the trade study used for the selection of system type (sec. 3.1.2), perform a weight tradeoff study to determine which repressurization system gives the minimum weight and complexity.

To decrease the weight required to support the repressurization process, utilize the gas diffuser and as much of the other mainstage pressurization plumbing, pressurant, and hardware components as possible.

### 3.2.1.4 TANK VENTING

#### 3.2.1.4.1 Venting Control

*Venting control shall protect a tank from over-pressurization and limit pressure as required for propellant temperature conditioning.*

To enhance reliability, the relief valve should operate independently of the vent valve; however, consider the possibility of one valve body incorporating both capabilities. For more information on vent and relief valves, refer to sections 3.2.2.4.1 and 3.2.2.4.2. Investigate the possibility of incorporating valve position indicators into the design.

The relief function for each propellant tank should consist of two redundant automatic pneumatic relief valves that are installed in parallel and are mechanically actuated by tank pressure. In establishing automatic relief characteristics for the vent control system, the designer should ensure that the operating ranges of the mainstage pressurization system and the relief-valve pressure do not overlap, unless this condition is necessitated by operational requirements. The relief-valve operating range should be as narrow as possible and as close to nominal tank pressure as possible.

When the propellant requires evaporative cooling (i.e., a cryogenic system), the venting system should also have two valves that are installed in parallel and can be placed in the OPEN position by an electrical or pneumatic control device. Evaluate the use of vacuum-jacketed pressure lines for required plumbing between the tank and valves so that the entry of excessive heat into the vent system and propellant tank can be prevented. For propellants whose vapors are classified as toxic or hazardous, examine the use of disconnects to mate the vent system to a facility disposal system during ground tests.

#### 3.2.1.4.2 Zero-Gravity Venting

*Zero-g venting shall be at a minimum and shall not involve mixed phase or liquid flow.*

Thermal control techniques (sec. 3.3.1.1) and slosh baffles (ref. 76) that minimize ullage gas heating should be evaluated as a means of minimizing the requirement to vent.

If a direct vent method is utilized, ensure that liquid propellant is kept away from the vent opening. One method is to settle the propellant by continuous propulsive venting or by firing small thrusters; another is to use slosh baffles (ref. 76).

Flight-proven thermodynamic vent systems (ref. 77) should be considered as an alternative to direct venting for control of ullage pressure and propellant temperature.

#### 3.2.1.4.3 Vent Thrust

*The thrust induced by vent exhaust plumes shall not produce adverse changes in vehicle attitude.*

Determine from the overall mission profile anlaysis whether propulsive or nonpropulsive venting is desired. Provide sufficient instrumentation in the vent system to determine the thrust level. For propulsive venting, install the system exit nozzles parallel to the longitudinal axis of the vehicle; if necessary, install them at an angle that minimizes the vent exhaust plume impingement onto the vehicle. Vehicle disturbances are easier to correct by the attitude control system when the forces are parallel to one of the stage axes.

Unless otherwise specified, for nonpropulsive venting, install two diametrically or longitudinally opposing flow restrictors for each tank to be vented immediately downstream of the common line from the tank. Again, the flow restrictors should be parallel to one of the vehicle primary axes. Unless a system requirement dictates otherwise, the exhaust plumes should be outward, away from the vehicle. To obtain equal thrust from a set of opposing flow restrictors, the Mach number upstream of the flow restrictors should be less than 0.1, and the restrictors should be identical in configuration.

## 3.2.2 System Components

*The reliability and redundancy of system components shall be consistent with the program requirements for the overall system.*

To provide system reliability, component arrangements and redundancy should be based on the known failure modes and failure rates and on compliance with the required system reliability. For example, series-connected redundant valves should be employed if the potential failure modes are leakage or failure to close. Quad arrangements (two parallel branches of series-connected valves) should be used if the component failure modes encompass both failure to close and failure to open. When valves larger than ¼ in. in diameter are required, use pilot-operated, pneumatically actuated valves to minimize weight,

electrical power drain, and sensitivity to vibration and acceleration. Latching mechanisms and solenoids are recommended for additional reduction in electrical power drain. Electrical components should incorporate Zener diodes for suppression of back EMF.

### 3.2.2.1 TANKS

#### 3.2.2.1.1 Pressurant Tanks

*The integrity of the pressurant storage vessel shall not be adversely affected by the changes in or rates of change in pressure and temperature during its service life.*

Use 4000 psi as a first cut approximation for the maximum operating pressure level of the storage vessel. Use the equations presented in section 2.1.3.2 to approximate the required pressurant mass and corresponding volume of the storage vessel. Final determination of the operating pressure and volume of the storage vessel should be made when the required pressurant mass is optimized from computer programs (e.g., refs. 45 through 49 and 59) and the storage pressure is optimized from weight tradeoff studies similar to the one illustrated by figure 3.

Use reference 121 (or equivalent) to determine the required wall thickness of the storage tank. Primarily consider a vessel of spherical shape and made of Ti-6Al-4V alloy. However, the final selection of the shape and material should be based on the space available in the booster, upper stage, or spacecraft and on the pressure and temperature extremes the vessel will be subjected to during its service life. Verify by tests that the vessel will withstand the pressure and temperature extremes anticipated during pressurant loading and venting during its service life.

#### 3.2.2.1.2 Propellant Tanks

*The pressurization system shall provide pneumatic pressure as necessary to maintain safe stress levels in propellant tank sidewalls and bulkheads.*

Use reference 7 or 121 for guidance in sizing the tanks and in selecting tank materials.

When propellant tank collapse due to structural instability is possible in the event of pressure loss, provide a highly reliable pressurant source control and provisions for pressure venting; e.g., utilize a portable pneumatic console with its own gas supply capable of pressurizing or venting the tanks to a safe pressure level during ground operations whenever the primary pneumatic source is not attached to the vehicle.

For internal common bulkheads, establish the allowable pressure difference and facing-sheet temperature band of the common bulkhead for ground hold, boost, staging, and flight conditions in terms of their effect on the pressurization system. In the evaluation, consider the entering gas temperature and local temperatures along the gas side of the bulkhead. Then determine if a relatively wide range of ullage pressure requirements can be satisfied by a constant ullage pressure in each tank. Where ullage pressure shifts are necessary, step-up/step-down methods are recommended. The possible benefits of sensing the liquid pressure at the bulkhead itself should be explored.

### 3.2.2.2 PRESSURE REGULATORS

*A pressure regulator shall, within size, weight, and cost restrictions, provide modulated control of ullage pressure as required for pressure-regulated systems*

Reference 60 provides detailed information on pressure regulator selection and design. The pressure regulator should be configured and sized to give the desired flow and regulation band for the propellant tank ullage pressure profile and start transients. Evaluate the use of a flow limiter as the flow-responsive element upstream of the regulator to minimize overpressurization during system startup. The flow limiter with minimum pressure drop is a critical-flow venturi. For additional information on flow limiters, use references 60 and 90. The pressure-regulator response should be fast enough to keep pressure overshoot at engine shutdown within limits. Size the system relief valve according to the maximum flow allowed by the flow limiter. Flow limiters are neither required nor recommended for back-pressure and differential-pressure regulators.

Pressure regulation bands. – For most pressure-fed and pump-fed propulsion systems, the pressure-regulator bandwidth ratio should be no greater than 3 percent. Narrower bandwidth ratios are recommended for applications wherein accurate velocity trims by burn time are required; two-stage regulators may be required for these applications. Also, for systems that substantially reduce the supplied pressure (10:1) or for systems in which the regulator set point is very close to zero psig (within 0.5 psi), two-stage regulators are recommended for maintaining the bandwidth ratio within permissible limits.

Regulator failure modes. – The regulator design should be evaluated and potential deficiencies of the particular design identified in relation to the common failure modes. It is recommended that proven concepts be incorporated in the regulator design to avoid the failure causes. Use references 60 and 90 or similar material as aids in determining the design improvements.

Make sure that the materials used in the regulator are compatible with the intended propellant and pressurant. It should be known or demonstrated by test whether the pressure regulator materials have any tendency to react chemically with the propellant and

pressurant fluids. In a hydrogen system, choose materials that are not subject to hydrogen embrittlement by the hydrogen gas.

The use of metal-to-metal seals should be restricted. Consult reference 43 or 60 for guidance.

### 3.2.2.3 PRESSURE SWITCHES

*A pressure switch shall operate within the design bandwidth as speedily as necessary without sticking or other malfunction and shall respond to pressure changes within specified time limits.*

Use reference 43 for details of pressure-switch design. Consider the following parameters in selecting a pressure switch: (1) operating pressure band, (2) anticipated life cycles, (3) switch response, (4) repeatibility requirements, (5) vibration and shock environments, (6) temperature environment, (7) switch electrical rating, and (8) fluid medium.

If pressure-switch response to short pressure peaks is desired, the pressure-switch sense line should be kept to an absolute minimum length. A long sensing line serves as a surge damper and thus decreases switch sensitivity to short pressure oscillations.

If gas pressure is applied too rapidly, the pressure switch sensing capsule may not have time to fill because the flow restrictor that admits the pressure into the capsule may be extremely small, and an observed actuation pressure higher than the design band can result. Likewise, if gas is removed too rapidly, an observed deactuation pressure lower than the design band can result because of the flow-restrictor capacity. Consequently, the predicted rate of pressure application and removal in the proposed application should be one of the pressure-switch specifications and, during testing of a pressure switch for actuation and deactuation points, the rate of pressure application or removal should be the same as that specified.

When life-cycle testing a pressure switch, cycle the unit within its design operating band rather than from zero to the operating range and then back to zero. The reason for this practice is that it simulates the conditions that occur during actual operation (ref. 43).

### 3.2.2.4 VALVES

#### 3.2.2.4.1 Vent Valves

*A vent valve shall not leak excessively, shall have adequate flow capacity, and shall operate reliably under all conditions of the application.*

Size. – The time allotted for propellant servicing during ground operations establishes the basis for determining vent capacity. Verify by tests that the vent valve has sufficient flow capacity for the conditions anticipated during ground servicing prior to launch.

In storable-propellant systems wherein a suppression pressure is to be maintained on the propellant by the ullage gas, it is recommended that the vent valve that normally is located within the ground support equipment be sized to provide the flow resistance needed to maintain the suppression.

In cryogenic-propellant systems, the valve vent size and flow area should be based on the maximum permissible ullage pressure that can be imposed on the propellant tank. Unless otherwise specified, the requirement for vent flow capacity should be determined by summing the propellant boiloff rate and the propellant fill rate. To minimize the valve size, and that of on-board and ground connecting lines and disconnects, the fill rate of cryogenic propellants should be reduced during the initial tank chilldown.

Actuation. – Handwheel- or lever-operated actuators are recommended for vent valves for storable-propellant systems. The valve materials should be resistant to products that result from moist atmosphere combining with the propellant. Verify the design through testing. Incorporate locking mechanisms in the actuator design to prevent (1) inadvertent closure of the vent valve during propellant servicing and (2) exposure of personnel and the spacecraft to damaging propellant vapors. To verify valve closure, consider the use of a "CLOSED" position indicator to assure proper poppet closure prior to disconnection of the vapor exhaust lines. Further, it is recommended that the design include a closeout cap as a redundant seal to the vent valve poppet.

In cryogenic-propellant systems wherein vent valves are remotely controlled, consider dual independent (redundant) solenoid actuator controls for maintaining the valve poppet in the open (vent) position. The vent valve design should incorporate "OPEN" and "CLOSED" position indicators for ease of determing poppet position. The materials, finishes, and design configurations for the vent poppet and actuator mechanism should be able to tolerate minor formation of moisture and ice. Consider the use of check valves at the actuator vent ports to avoid cryopumping condensible air into the actuator. Consult reference 90 for additional information concerning actuators.

### 3.2.2.4.2 Relief Valves

*A relief valve shall not leak excessively, shall have repeatable and adequate flow-relieving characteristics, and shall operate reliably under all conditions of the application*

Consult reference 60 for detailed information on relief valves. Unless otherwise specified, the relief valve should be able to maintain the pressure at a level less than 1.1 times the maximum operating pressure of the system.

Since relief valves function only under abnormal or emergency overpressurization conditions in most system installations, they should be tested periodically to establish confidence in their capability to function on demand. When no leakage of the relief valve is allowed, the valves should be isolated from the ullage by a burst disk at the valve inlet. Relief valves that are isolated from the system by burst disks may have to be removed from the system for the periodic functional checkout.

Verify that the valve seat materials will meet the mission duration and operating requirements.

#### 3.2.2.4.3 Check Valves

*A check valve shall not be subject to excessive internal leakage in the checked flow direction and shall not introduce high flow resistance in the flow direction.*

Consult reference 60 for information on the design of check valves.

For critical applications, use series or series-parallel check valve arrangements to achieve the desired leakage control and redundancy. In these configurations, keep the flow resistance across each branch at a minimum to preclude prohibitive system resistance in the event of blockage in one flow branch.

In systems with a pressurization system common to both the fuel and oxidizer, use the longest practical line length (and largest line volume) to separate the regulator and check valves; this practice extends the period for leakage of propellant vapors to form unacceptable concentrations upstream of the check valve. Because of the possibility of minor crossfeed of propellant vapors in this type of system, the materials used in the check valves should be compatible with propellants, pressurant, and all utility fluids.

Make sure that valve seat materials will meet the mission duration and operating requirements.

#### 3.2.2.4.4 Isolation Valves

*An isolation valve shall (1) control pressurant leakage to a safe factor below the maximum tolerable and (2) be able to respond to the needs of the system.*

For system applications wherein zero leakage and limited multiple engine firings are required during the mission, an assembly of explosive-actuated valves as illustrated in figure 16 is recommended. Consult reference 60 for information on design of explosive valves.

For system applications wherein some pressurant leakage can be tolerated, the single solenoid-operated isolation valve is recommended as a more economical choice. Solenoid-operated valves are particularly attractive in systems supporting extensive multiple engine firings with short quiescent periods between firings. Consult reference 90 for additional information on solenoid valve design.

### 3.2.2.5 PRESSURANT HEAT EXCHANGERS

*The heat exchanger design and heat source shall be consistent with the pressurization system requirement to heat inert gases or to evaporate propellant*

Primarily consider a shell-and-tube heat exchanger design with turbine exhaust gases flowing over the helically-coiled tubes and the pressurant flowing inside the tubes (fig. 17). Consult reference 128 for methods of determining the required heat exchanger coil length, diameter, and other variables. Determine if a filter is required upstream of the heat exchanger pressurant inlet to preclude the possibility of contaminants being ingested by the heat exchanger and subsequently fouling the system. If a filter is required, determine if the pressure drop across the filter presents a problem or significantly affects the delivered level of pressure to the ullage area. Use reference 98 or other suitable guide on filters to make the determination.

In pump-fed propulsion systems, the turbine (gas generator) exhaust gases should be given prime consideration as a heat source to heat the inert gases or to generate propellant vapors. If the pressurant is hydrogen and the engine is regeneratively cooled by hydrogen, investigate the possibility of extracting the vapor from the engine regenerative cooling jacket and avoiding the need for a heat exchanger. If this method is used, the gaseous hydrogen should absorb the maximum possible heat at the point of extraction. In pressure-fed propulsion systems where the pressurant is colder than the propellant, evaluate the possibility of using the propellant as the heat source.

#### 3.2.2.5.1 Startup

*The startup flow into the heat exchanger shall produce neither gas blowback into the pump nor excessive flow surge into the tank ullage space*

To preclude the flow of pressurant prior to the actual circulation of the fluid heat source (or heat sink) within the heat exchanger, evaluate the use of a check valve, burst disk, or solenoid valve at the port where the pressurant enters the heat exchanger. For pump-fed propulsion systems, heat exchangers used for propellant evaporation should be isolated from the engine pump and should be free of propellant before and during system start-up. Consider the installation of a check valve or burst disk in the line between the heat

exchanger and pump discharge to accomplish the isolation. Specify the required check-valve spring load or disk burst pressure to preclude the flow of propellant prior to the actual circulation of the hot gas source within the heat-exchanger shell.

#### 3.2.2.5.2 Heat-Transfer Stability

*Heat-transfer efficiency shall remain within acceptable limits, without appreciable degradation from fouling or clogging, throughout the heat-exchanger operating duration.*

Although an analytical heat-transfer coefficient may have been determined during initial design development, test the heat-exchanger system under operational conditions to determine the overall heat-transfer coefficient. Consult reference 128 or other heat-transfer text for the method to be used and instrumentation required to determine the overall heat-transfer coefficient.

To preclude potential fouling of the heat exchanger, maintain the heat-exchanger tube wall temperature a safe factor above the triple point of any of the fluid condensible components. Water vapor (triple point = 491.71°R) and carbon dioxide (triple point = 389.69°R) should be considered as the two materials that are prime contributors to heat-exchanger fouling. Carbon monoxide gas is another condensible substance (triple point = 122.59°R); however, its critical temperature (239.29°R) is below that of the carbon dioxide gas, and if the system prevents deposition of carbon dioxide condensate, no problem should exist with carbon monoxide.

#### 3.2.2.5.3 Flow Capacity

*The flow capacity of the heat exchanger shall be sufficient for producing the necessary pressurant volume flowrates with the available heat source and the range of propellant mass flowrates anticipated.*

The heat-exchanger critical-flow capacity should be greater than the maximum required pressurant volumetric flowrate. The required pressurant volumetric flowrate is the liquid propellant volumetric expulsion rate from the tank times a factor greater than one. The factor adjusts for heat losses. For initial estimates, use 1.2 to 1.5 as the range for this factor. If more than one heat-exchanger system will supply the pressurant, design each heat exchanger to supply that fraction of the required volumetric flowrate Q equal to Q/(n-1), where n is the number of heat-exchanger systems and the (n-1) factor allows for manifoliding losses.

To determine the pressurant volumetric rate supplied to the ullage, divide the supplied mass flowrate by the pressurant density evaluated at tank pressure. Assume an isenthalpic

expansion process from heat-exchanger outlet conditions to tank pressure to determine the pressurant density. For example, if the heat-exchanger outlet pressure and temperature are 675 psia and 414.7°R for an oxygen pressurant and the tank pressure is 40 psia, the supplied density is 0.322 lbm/ft$^3$ at 381.7°R (ref. 9).

To determine if the heat-exchanger critical-capacity point is reached within the design flow range, analytically construct a plot of volumetric flowrate versus mass flowrate as shown in figure 19 for the maximum and minimum ullage pressure design levels. It is assumed that the heat-exchanger system performance characteristics are known (i.e., outlet pressure and temperature band versus flow). Should the graphical results be unacceptable, redesign the heat exchanger to increase the heat-transfer coefficient. Verify improvement in heat-exchanger performance by tests.

#### 3.2.2.5.4 Flow Stability

*The fluid flow through the heat exchanger shall be stable and free of variations that may precipitate tube burnout or other structural failure.*

The minimum required heat-exchanger mass flowrate should be greater than the mass flow that produces low-frequency pressure oscillations. To preclude high-frequency pressure oscillations, choose a suitable combination of system resistances (inlet control orifice, heating section, downstream flow-control device, and volume between heat exchanger outlet and downstream flow control device) by the methods suggested in references 94, 95, or 97. Elimination of flow instability is not certain until the design corrections are tested under operational conditions.

To preclude tube burnout, determine a tube thickness and material that will withstand the operating wall temperatures required by the heat-transfer process. Tube burnout possibilities may require a compromise between maximum heat exchange and minimum component weight.

### 3.2.2.6 PRESSURANT GAS DISTRIBUTORS

*The gas distributor shall introduce pressurant into the tank so that its speed and direction will provide the desired distribution of ullage-gas temperature but will not induce structurally damaging vibrations*

If gas diffusion with minimal ullage fluid disturbances is desired (usually the case with single-burn, short-duration missions), install a diffuser inside the tank near the top of its forward bulkhead.

If ullage-gas mixing (de-stratification) is desired to prevent ullage pressure rise during regulator lockup, examine the possiblity of injecting the pressurant into the ullage space at high velocities with the use of flow restrictors or vortex tubes. Also, evaluate the use of a mechanical fluid agitator such as a fan installed in the ullage space to assist the gas distributor in mixing the incoming pressurant and ullage gas.

Verify through system ground tests that the gas distributor (diffuser) accomplishes the desired effect on the temperature distribution of the ullage gas; during the tests, look for adverse effects such as flow-induced acoustical vibrations that could cause structural failure of the gas distributor. If necessary, strengthen the structure to preclude vibration.

For tanks with positive expulsion devices such as bladders or diaphragms, use a gas distributor with plates to prevent extrusion of the bladder into the gas inlet port in the event of a pressure reversal during testing.

### 3.2.2.7 ANCILLARY COMPONENTS

*The ancillary components shall perform their functions in the pressurization system without introducing excessive leakage or unaccepatable pressure drop.*

Lines. – Use lines of circular cross section whenever possible. Unless otherwise specified, use a factor of safety of four in determining the required wall thickness of the lines. The working pressure of the lines should be no less than the maximum pressure of the pressurant at its source, except when the line has a relief valve; in this case, the working pressure of the line may be lowered to be equal to the maximum operating pressure of the relief valve. Consult reference 98 for additional information on lines.

For a line whose inner diameter is greater than 1 in., use flanged bolted connectors at the line inlet and exit. For lines with inner diameters less than 1 in., use flared-tube fittings and threaded connectors in boosters and upper stages; in spacecraft, use brazed- or welded-in-place connections.

The total pressure loss within any line segment is the sum of the pressure drops due to friction, bends in the line, and increased velocity resulting from heat addition. To determine the pressure loss due to friction, use equation (5) when the Mach number of the gas does not exceed 0.2; when Mach $> 0.2$, use the equations for Fanno flow given in reference 43.

Attempt to minimize the number of bends within the line. When possible, construct line bends with a ratio of bend radius to line inner diameter of 2 or greater. With this ratio, the resulting pressure-loss coefficient normally is less than 0.1.

To evaluate the effects of heat transfer from the line wall to the gas, use the equations for Rayleigh flow given in reference 43.

Disconnects and couplings. — Use quick-disconnects for (1) ease of installation, (2) rapid connecting and disconnecting, (3) preventing entry of contamination or (4) remote disconnecting of fluid lines. Use quick-disconnects for all pressurization-system vehicle/GSE interfaces except the propellant-tank vent valve/GSE interface. For this interface, use quick-disconnects for cryogenic propellants and couplings for earth-storable propellants. Consult reference 68 for additional information on disconnects.

Seals. — Use a static seal at a line inlet or exit with a disconnect or a flanged bolted coupling. For inert-gas systems, use elastomer O-rings or molded-in-place seals; however, for pressurants that are heated above 960°R, consider the use of a metal pressure-assisted or diametral seal. Consult reference 68 for additional information on seals.

Filters. — Consult references 43 and 98 for information on the design or selection of filters. Use filters at locations that will protect critical components. Typical filter locations are the inlets to pressure regulators and pilot valves and the outlets of the gas storage tank. Design the filter to withstand any pressure surges that are anticipated for the system. Specify low-temperature requirements for the filter if it will be subject to gas at cold temperatures as a consequence of gas expansion from the storage tank or if it will be exposed to gas at cryogenic temperatures. If frequent filter removal is anticipated for replacement and for verification of filter cleanliness, design the filter holder to be removed and installed easily.

Transducers. — Use references 43 and 99 as sources of information on design and selection of pressure and temperature transducers. Use pressure and temperature transducers as a means of determining storage-vessel conditions, tank ullage conditions, and pressure-regulator performance or as sensing devices in a flow-restrictor measuring system.

# 3.3 DESIGN EVALUATION

## 3.3.1 Heat-Transfer Effects

*The heat transfer between, among, and within the ullage gas, propellant, and system components shall not degrade performance of the pressurization system*

Use reference 63 or 64 to obtain information on methods for heat-transfer analysis. Use references 7 and 43 for specific applications of heat-transfer principles to pressurization system design. Follow the guidelines given in sections 3.3.1.1 through 3.3.1.4 below.

### 3.3.1.1 THERMAL CONTROL

*The net effect of heat transfer through the propellant tank walls and bulkheads shall be a thermal condition that minimizes tank venting and maintains propellant temperature within design limits*

The isulation configuration should be considered concurrently with the selection of the propellant tank pressures and pressurant temperatures. Perform a detailed analysis that compares the pressurization-system weight penalty against the tank-insulation weight penalties.

When the tank configuration incorporates a common bulkhead, investigate the possibility of balancing heat transfer to achieve a condition that requires venting only the tank with the lower-boiling-point propellant (e.g., venting only the hydrogen tank in oxygen/hydrogen propellant vehicles). To preclude gas venting of the tank with the higher-boiling-point propellant, the common bulkhead should be designed to pass heat from it at a rate sufficient to offset the heat entering the tank.

Verify the configuration by tests before incorporating it in the vehicle design.

### 3.3.1.2 VARIATION IN PRESSURANT TEMPERATURE

*Variations in ullage-gas temperature shall be consistent with design objectives for limiting the gas weight required in the system.*

Examine the particular mission in question to determine the most advantageous gas temperature profile. For single-burn missions (booster-type vehicles), a stratified profile is generally recommended to conserve ullage-gas mass. Warm pressurant should be introduced through a properly designed tank diffuser (sec. 3.2.2.6). Analytical values of the thermal and concentration gradients along tank walls, bulkheads, and the gas/liquid interface should be examined to verify that the boundary-layer conditions favor minimum heat transfer. Give special attention to ullage-gas temperature control during any low-gravity operations. Use a prototype, preferably a full-scale model, of the pressurization system and tank in a test that duplicates the single-burn mission events. With the ullage area properly instrumented with temperature transducers, verify the analysis through test.

Internal tank structural members should be adapted to inhibit or damp propellant slosh disturbances. Use reference 76 as a guide on design for slosh suppression. Consider using scaled-down models of the tank and pressurization system in a shaker system to evaluate the effectiveness of the slosh suppression devices used.

In earth-storable propellant systems, use a gas distributor to mix the incoming pressurant with the ullage gas and thus attain a relatively uniform gas temperature in the ullage. Do not permit the ullage-gas temperature to become colder than the freezing temperature of the earth-storable propellant. By maintaining the temperature of the ullage gas warmer than the freezing temperature of the propellant, the potential phase change of the propellant surface is avoided. If the analytical results show that the ullage-gas temperature could fall too low, consider the use of electric or radioisotope heaters or a heat exchanger in the ullage space or

pressurant supply line. Verify through tests with a prototype model that the ullage-gas temperature remains above the propellant freezing temperature.

For multiple-start and pulsing operations with stored inert gas as the pressurant, determine by analysis the pressurant temperature drop due to the expansion process from the storage vessel into the ullage and any subsequent effects of the low-entering-temperature gas on average temperature and pressure values in the ullage. When either unacceptable decay of ullage pressure or regulator-lockup pressure rise occurs, use pressurant/propellant heat exchangers to condition the pressurant; as an alternative, evaluate increasing the volume of the pressurant storage vessel to decrease the gas cooling effect. Use a properly instrumented full-scale prototype of the selected pressurization system to verify that no problems with gas temperature exist.

Analytically determine the gas temperature profile within the tank ullage during each phase of the vehicle mission operation. Computer programs (sec. 2.1.2) are recommended for this analysis. Include the effects of all heat-transfer processes within the ullage as well as changes in the pressurant source temperature and gas temperature due to gas expansion from the storage vessel to the ullage space.

### 3.3.1.3 STRATIFICATION OF PROPELLANT TEMPERATURE

*Propellant temperature stratification producing localized increases in propellant vapor pressure shall not result in the loss of adequate pressurization margin (NPSH) at the engine pump inlet*

For earth-storable propellant systems, propellant temperature stratification normally is not a problem. However, for cryogenic propellants, the magnitude of propellant temperature stratification and its impact on the pressurization requirements should be computed for all propulsion systems, especially for pump-fed systems involving liquid hydrogen.

Computer programs such as those noted in references 49, 101, and 102 are recommended for determining the propellant temperature distribution in the tank as a function of flight time. Following this determination, the variations of propellant temperature and saturation pressure at the pump inlet should be determined as a function of the propellant outflow; use ground tests that simulate the flight mission time line in a prototype of the vehicle. This information should be combined with data on the minimum required pump inlet NPSH to determine if system modifications are required because of propellant temperature stratification.

To compensate for the increase in pump inlet temperature toward the end of powered flight, consider reducing the bandwith of the ullage-pressure control system, with subsequent stepped up pressurization (when required). The time during powered flight when

the additional pressurization should occur, and the magnitude of the ullage pressure increase, should be determined and programmed into the vehicle flight controller.

For vehicles in which a noncondensible gas (e.g., helium) is used for prepressurization and mainstage pressurization, evaluate the use of a propellant-to-pressurant heat exchanger to condition the pressurant temperature such that the ullage gas and propellant temperature difference is small. This process reduces propellant temperature stratification by maintaining the partial pressure of propellant vapor close to its initial condition. Another recommendation is to inject the noncondensible pressurant into the propellant at the tank bottom and cause the colder propellant to mix with the stratified warmer layer as the pressurant bubbles up to the ullage (sec. 3.3.2.2). If this method is used, route the bubble train away from the tank outlet port; otherwise the bubbles will be ingested into the engine.

Consider increasing the thickness of tank insulation to reduce the rate of heat transfer into the tank. An alternative is to add more propellant to the vehicle, thus avoiding the ingestion of stratified propellant into the pump but causing the vehicle to be operated at less than optimum propellant utilization. Investigate the possibility of reducing propellant stratification by (1) mixing the propellant warmer outer layer with its colder bulk by the use of boundary-layer deflectors, or (2) separating the propellant outer boundary layer from its bulk by the use of an inner sleeve.

Test the selected concept with prototype system, preferably a full-scale model, to verify that it provides the desired effect on propellant temperature. Should the initial concept prove unsatisfactory, test the remaining concepts.

### 3.3.1.4 TEMPERATURE GRADIENTS IN SYSTEM COMPONENTS

*Temperature gradients within or between components in the system shall not adversely affect system operation or degrade system performance.*

Perform a thermal analysis of pressurization components and their environments to ascertain if temperature gradients are sufficiently adverse to cause cryopumping of the propellant vapors. In regions where cryopumping in a component or section of line can occur, provide heat blocks (insulation), use a check valve to block the entry point, or relocate the component to a more favorable environment. If liquid formation due to cryopumping can occur and is detrimental to system operation, include in the system design provisions for trapping or vaporizing the liquid (e.g., surface-tension acquisition traps, or heating elements in the system). Design the component to withstand the thermal stresses and temperature cycling that can occur in the application. In all cases, verify the design by system test.

To increase heat transmission within components, utilize materials that have good thermal conductivity (e.g., aluminum and copper alloys) and good physical contact of the joints in

the conduction path. To increase heat transfer from the component into the environment, raise the component emissivity.

To reduce heat transfer within components, use materials with low thermal conductivity (e.g., nickel and stainless steel alloys) without violating other component requirements such as strength, corrosion resistance, and compatibility. Employ air space, vacuum, and insulation to interrupt the conduction path.

## 3.3.2 Mass-Transfer Effects

*The mass transfer between pressurant and propellant shall not degrade the performance of the propulsion system.*

Perform ground tests of the tankage assembly with propellant and pressurant to determine any mass transfer effects. If possible, perform the tests for the same duration and under the same thermal conditions as will be experienced during flight. Withdraw propellant from the tank at given time intervals or, if vehicle flight duration is being simulated, at simulated engine burn periods, and analyze the propellant for pressurant quantity. Should the level of pressurant in solution be unacceptable, reevaluate the choice of pressurant and bladder material (if applicable).

### 3.3.2.1 COUNTERPERMEATION

*The counterpermeation of pressurant and propellant vapors through permeable expulsion devices in propellant tanks shall be at a minimum.*

Perform an analysis of the gas migration across the permeable bladder whenever the ratio of propellant vapor pressure to ullage gas pressure is greater than 1:10. Employ analytical methods such as those given in reference 108 to estimate the size of a gas bubble that will migrate across the permeable bladder. If cryopumping of the propellant vapor is a possibility, account for the additional propellant mass in the analysis.

Where the calculated equilibrium volume of the migrated gas bubble is excessive and may have detrimental gas-ingestion effect on engine operation, take as many of the following steps as feasible to circumvent this problem:

- Select a pressurant with lower rate of permeation through the given membrane, or use alternate materials of lower permeability (e.g., metal/polymer laminates).

- Store the propellant in the tank either under its own vapor pressure with no ullage gas or under high ullage pressure (above 150 psi on $N_2O_4$ at ambient temperature).

- Inject a small amount of propellant to saturate the ullage volume with the propellant vapor. Verify that there is no incompatibility problem with the valves and other hardware that come in contact with the propellant vapor.

- Incorporate a gas/liquid separator in the tank (ref. 41).

#### 3.3.2.2 PRESSURANT DISSOLUTION IN PROPELLANT

*Pressurant dissolution in propellant shall be a safe factor below the maximum amount tolerable for satisfactory propulsion system performance.*

The pressurization system designer must work in concert with the engine and propellant system designers in the area of gas dissolution in the propellant to prevent adverse shifts in engine performance and problems in propellant utilization. To determine the rate and quantity of pressurant diffusing and dissolving in the propellants, perform a mass-transfer analysis similar to the one presented in reference 117. The pressurant mass in solution should be added to the gas storage requirements to maintain the desired ullage conditions.

To reduce any problems related to gas dissolution in propellants, use helium rather than nitrogen gas as the pressurant, because helium is less soluble in many of the popular propellants. If nitrogen gas must be used, the rate of gas dissolution in propellant and the amount dissolved at any given time should be determined, so that the engine system designer can determine if the gas can be tolerated in the engine design. For vehicle systems that have permeable positive-expulsion devices, the recommendations presented in section 3.3.2.1 should be considered as a means of reducing gas dissolution in propellant.

Select a pressurant that has solubility characteristics that are as similar as possible in both the fuel and oxidizer. In systems with $N_2O_4$ and MMH as the propellants, the use of $GN_2$ as a pressurant should be carefully scrutinized because of its substantially different solubility in the two fluids.

Verify by system test that the engine operates properly with the intended pressurization system.

### 3.3.3 System Dynamics

*The frequency and magnitude of the pressure oscillations within the pressurization system shall not result in component or structural failure or in unacceptable propulsion system performance.*

Verify through system testing that no problem with system dynamics exists. For the tests, use a full-scale model of the pressurization system and propellant tankage utilizing flight hardware. Pay particular attention to startup transients and ullage-coupled pogo as described below.

### 3.3.3.1 STARTUP TRANSIENTS

*The pressurization system startup shall be free of "water-hammer" effects that can cause structural damage within the propellant system.*

Determine the desired isolation-valve/feedline configuration. The propellant isolation valves may be located close to the tank outlets to isolate the feedlines as well as the engine from the propellant, or the valves may be closely coupled to the engine to minimize the fluid water-hammer effects on the feedlines; the choice depends on design goals.

To evaluate configurations, obtain the minimum design stress levels (force per unit area) of the engine valve inlets and feedline assemblies. From these inputs, select the stress level with the lowest value: this value, S, is the maximum allowable water-hammer pressure for the system.

Determine the maximum pressure on the isolation valve inlet from the following equation:

$$S = P_{iv} + \frac{c}{12}\left[\frac{\rho_p\,(P_{iv} - P_{fl})}{16.1}\right]^{1/2} \qquad (17)$$

where

$P_{iv}$ = isolation valve inlet pressure, psi

$c$ = speed of sound in the liquid propellant, ft/sec

$P_{fl}$ = feedline pressure when void of propellant, psi

$S$ = maximum allowable water-hammer pressure, psi

The maximum permissible ullage pressure $P_{u,max}$ is the isolation valve inlet pressure less any propellant head at the time the isolation valve is commanded to open. After determining the maximum permissible ullage pressure, compare it with the design regulated pressure band of the system. If the maximum regulated pressure level is less than $P_{u,max}$, there is no harmful propellant impact against the engine valves or propellant feedlines and no further evaluation is required. If $P_{u,max}$ is within or below the designed regulated pressure band, investigate the possibility of increasing the system permissible working stress (working in concert with engine and propellant system designers) or incorporate the

following pressurization activation sequence to preclude harmful water-hammer effects on the engine valves and feedlines:

(1) Prior to initial system activation, maintain the ullage pressure below $P_{u,\,max}$.

   (a) Prior to launch, pressurize the system to a level no greater than $P_{u,\,max}$.
   (b) For any restarts, vent the system ullage pressure to a level less than $P_{u,\,max}$.

(2) Open the propellant isolation valves and permit the feedlines to fill with propellant, then open the engine valves and pressurization system valves.

### 3.3.3.2 ULLAGE-COUPLED POGO

*The pressurization system pneumatic behavior shall not result in ullage-coupled pogo instability.*

Perform a vehicle dynamic analysis to determine if pogo instability may occur as a result of coupling of tank structure with oscillations of the pressurization system. Since most dynamic-analysis results are qualitative, it is recommended that ground system tests be performed on the flight vehicle configuration; the tests should encompass the system startup sequence and steady-state mainstage operation.

To eliminate the initiation of ullage-coupled pogo for stages that require the filling of feedline volume with propellant during system startup, isolate the pressure-regulation sensing system until the filling operation is completed. To prevent the development of ullage-coupled pogo during mainstage, incorporate an in-line double-plenum chamber in the pressure-regulation sense line to attenuate any rapid surges in ullage pressure; in addition, use a long sense line to provide additional damping of any ullage-pressure oscillations.

If the recommended sense-line designs are not feasible, select a pressure regulator with slow-response characteristics.

Reference 129 contains additional information on pogo prevention.

# APPENDIX A

**Conversion of U.S. Customary Units to SI Units**

| Physical quantity | U.S. customary unit | SI unit | Conversion factor[a] |
|---|---|---|---|
| Density | $lbm/ft^3$ | $kg/m^3$ | $1.602 \times 10^1$ |
| Energy | Btu | J | $1.054 \times 10^3$ |
| | ft-lbf | J | 1.356 |
| Force | lbf | N | 4.448 |
| Head or headrise | ft | m | $3.048 \times 10^{-1}$ |
| | ft-lbf/lbm | J/kg | 2.989 |
| Impulse, total | lbf-sec | N-sec | 4.448 |
| Length | ft | m | $3.048 \times 10^{-1}$ |
| | in. | cm | 2.54 |
| Load factor | lbf/lbm | N/kg | 9.807 |
| Mass | lbm | kg | $4.536 \times 10^{-1}$ |
| Molecular weight | lbm/(lbm-mole) | kg/(kg-mole) | 1 |
| Permeativity | $\frac{\text{lbm-mole}}{\text{in.}^2\text{-hr-psi}}$ | $\frac{\text{kg-mole}}{\text{cm}^2\text{-hr-N/cm}^2}$ | $1.02 \times 10^{-1}$ |
| Pressure | atmosphere | $N/cm^2$ | $1.013 \times 10^1$ |
| | psi($lbf/in.^2$) | $N/cm^2$ | $6.895 \times 10^{-1}$ |
| Temperature or temperature difference | °R | K | $K = \frac{5}{9}$ (°R) |
| Thermal conductivity | $\frac{\text{Btu}}{\text{hr-ft-°R}}$ | $\frac{\text{J}}{\text{sec-m-K}}$ | 1.730 |

(continued)

Conversion of U.S. Customary Units to SI Units (concluded)

| Physical quantity | U.S. customary unit | SI unit | Conversion factor[a] |
|---|---|---|---|
| Thrust | lbf | N | 4.448 |
| Universal gas constant | $\frac{\text{ft·lbf}}{\text{lbm·mole·}^{\circ}\text{R}}$ | $\frac{\text{N·m}}{\text{kg·mole·K}}$ | 5.380 |
| Viscosity, absolute, $\nu$ | $\text{lbf·sec/ft}^2$ | $\text{N·sec/m}^2$ | $4.788\times10^{1}$ |
| Viscosity, dynamic, $\mu$ | gm/(cm·sec) (centipoise) | $\text{N·sec/m}^2$ | $1.00\times10^{-3}$ |
| | lbm/(ft·sec) | $\text{N·sec/m}^2$ | 1.488 |
| Volume | $\text{ft}^3$ | $\text{m}^3$ | $2.832\times10^{-2}$ |
| | $\text{in.}^3$ | $\text{cm}^3$ | $1.639\times10^{1}$ |

[a]Multiply value given in U.S. customary unit column by conversion factor to obtain equivalent value in SI units. For a complete listing of conversion factors for basic physical quantities, see Mechtly, E. A.: The International System of Units Physical Constants and Conversion Factors. Second Revision, NASA SP-7012, 1973.

# APPENDIX B

# GLOSSARY

| Term | Definition |
|---|---|
| actuator | device that converts control energy into mechanical motion to operate a valving element |
| ambient temperature | temperature of the environment surrounding the system or component |
| bandwidth | limits of variation of regulated pressure above and below its desired value |
| bandwidth ratio | absolute value of $\left[\frac{\text{regulator setting}}{\text{regulator set point}} - 1\right]$ |
| Belleville spring | truncated conical metal spring washer that can provide a negative mechanical spring rate |
| blowdown system | closed propellant/pressurant system that decays in ullage pressure level as propellant is consumed and ullage volume thereby is increased |
| cavitation | formation of vapor bubbles in a flowing liquid whenever the static pressure becomes less than the fluid vapor pressure |
| cavitating venturi | convergent-divergent constriction in a line that produces cavitation at its throat; because of the cavitation effects, flow of the liquid in the line remains constant even though the downstream pressure varies |
| centipoise | unit of dynamic viscosity that relates the applied fluid shear stress to the fluid velocity gradient normal to the flow |
| chatter | rapid uncontrolled seating and unseating of a valve |
| compressibility factor (Z) | ratio of ideal-gas density to real-gas density |
| controller | device that converts an input signal from the controlled variable (temperature, pressure, level, or flowrate) to a valve actuator input (pneumatic, hydraulic, electrical, or mechanical) to vary the valve position to provide the required correction of the controlled variable |
| counterpermeation | simultaneous migration of propellant vapor and pressurant (in opposite directions) across a permeable membrane (bladder) |

| Term | Definition |
| --- | --- |
| critical flow capacity | the point in heat-exchanger performance where $\frac{\partial Q}{\partial \dot{w}} = 0$. i.e., where pressurant volumetric flowrate is at a maximum and an increase in pressurant mass flowrate produces a decrease in volumetric rate |
| cryogenic propellant | propellant that is liquid only at temperatures below 221.4°R (123°K) |
| cyropumping | induction of vapor into a confined cavity by virtue of a local reduction in vapor pressure caused by condensation of vapor on an extremely cold (cryogenic) surface of the cavity |
| dissociation | separation of a compound into simpler components |
| elastomer | polymeric material that at room temperature can be stretched to approximately twice its original length and on release return quickly to its original length |
| explosive valve | valve having a small explosive charge that provides high-pressure gas to change valve position (also known as a squib valve) |
| fail-safe | the philosophy in the design of propulsion system valves and associated hardware that seeks to avoid the compounding of failures; fail-safe design provisions ensure that the valve element will move to a predetermined "SAFE" position if actuation pressure or electrical power is lost |
| fluid | term for the gaseous or liquid state of a substance |
| fretting | mechanism of wear that acts on mating metallic materials to produce surface damage when one surface repeatedly moves through small-amplitude displacements relative to the other |
| galling | progressive damage of sliding surfaces (usually metallic) under high loads; galling results in increased friction and possible seizure |
| gas distributor | passive device that determines the flow pattern of the gas entering an ullage space |
| gas permeativity | capability of a gas to penetrate or diffuse through another substance |
| gas solubility | capability of a given gas to dissolve in a given fluid under specified conditions |

| Term | Definition |
| --- | --- |
| heat-transfer coefficient | analytically or empirically determined numerical constant that describes the rate of heat transfer per unit area per unit temperature difference between two materials |
| heterogenous decomposition | separation of a substance into simpler components that differ in phase |
| hydraulic | operated, moved, or effected by liquid used to transmit energy |
| hydrogen embrittlement | loss in ductility of a metal as a result of the exposure of the metal to nascent hydrogen |
| hydrostatic pressure | fluid pressure due to gravitational forces |
| hypergolic propellants | propellants that ignite spontaneously when mixed with each other |
| inert gas | a fluid that will not react with other materials |
| Joule-Thomson effect | the change in gas temperature with gas pressure as the gas expands through a throttling device |
| load factor | ratio of vehicle thrust to its overall mass |
| lockup | the no-flow condition when a pressure regulator is kept closed in response to downstream pressure being at or above the regulator setpoint; lockup pressure may creep upward if the regulator leaks |
| mainstage | the attainment of 90 percent or more of the steady-state rated thrust level of a rocket engine |
| modulating | control system in which the controlled variable is proportional to a sensed parameter and is continuously variable within the regulated range |
| monocoque | structure in which the stressed outer skin carries all or a major portion of the torsional and bending stresses |
| monopropellant | a rocket propellant in which both the fuel and oxidizer are contained in a single substance; e.g., hydrogen peroxide |
| mission duty cycle | the total propulsion system requirement for a scheduled number of operations for each engine burn sequenced over the total elapsed mission time |
| nonmodulating | control system in which the controlled variable cycles between limits |

| Term | Definition |
| --- | --- |
| normally closed valve | powered valve that returns to a closed position on shutoff or on failure of the actuating energy or signal |
| normally open valve | powered valve that returns to an open position on shutoff or on failure of the actuating energy or signal |
| phase | a solid, liquid, or gaseous homogeneous form existing as a distinct part of a heterogeneous system |
| pilot operated | term denoting the use of an auxiliary or relay valve that controls the actuation pressure to a large valve so that low-energy circuits can be used for the control of high-energy systems |
| plastic | high-molecular-weight material that while usually firm and hard in its finished state is at some stage in its manufacture soft enough to be formed into a desired shape by application of heat or pressure or both |
| pneumatic | operated, moved, or effected by gas used to transmit energy |
| pogo | term for feed-system-coupled longitudinal oscillations of a rocket vehicle |
| prepressurization | sequence of operations that increases the ullage pressure to the desired level substantially prior to the main sequence of propellant flow and engine firings; in launch vehicles prepressurization occurs prior to liftoff |
| pressurant | gas that provides ullage pressure in a propellant tank |
| pressure fed | term for a propulsion system in which tank ullage pressure expels the propellants from the tanks and into the combustion chamber of the engine |
| pressure recovery | conversion of velocity head to pressure head in the section of the fluid conduit downstream of a constriction |
| pressure regulator | pressure control valve that varies the volumetric flowrate through itself in response to a downstream pressure signal so as to maintain the downstream pressure nearly constant |
| propellant | material carried in a rocket vehicle that releases energy during combustion and provides thrust to the vehicle |
| pump fed | term for a propulsion system that incorporates a turbopump to deliver propellant to the combustion chamber at a pressure greater than the tank ullage pressure |

| Term | Definition |
| --- | --- |
| redundant design | design in which more than one unit is available for the performance of a given function so that reliability is increased |
| relief valve | pressure-relieving device that opens automatically when a predetermined pressure is reached |
| repressurization | sequence of operations during vehicle flight that utilizes an on-board pressurant supply to restore the ullage pressure to the desired level after a burn period |
| response time | the length of time from first signal to completion of an action. In valves, it is a total time comprised of electrical delay plus pneumatic or hydraulic control system delays plus valve travel time |
| scc/sec | standard cubic centimeters per second |
| scim | standard cubic inches per minute |
| self-pressurization | increase of ullage pressure without the aid of additional pressurant |
| shutoff valve | valve that terminates the flow of fluid; usually a two-way valve that is either full-open or full-closed |
| solenoid valve | a poppet, spool, or piston valve actuated by an integrally mounted solenoid actuator |
| squib | term for an explosive valve |
| static seal | device used to prevent leakage of fluid through a mechanical joint in which there is no relative motion of the mating surfaces other than that induced by changes in the operating environment |
| storable propellant | a propellant with a vapor pressure low enough that the propellant can be stored for a specified period of time in a specified environment (earth or space) at moderate ullage pressures without significant loss of mass |
| superheat | raise the temperature of a vapor to a level higher than the corresponding saturated-vapor temperature at the given pressure |
| tank safing | process of venting ullage gas of "empty" tank to reduce pressure to completely safe levels |
| temperature stratification | the existence of a temperature gradient within a fluid |

| Term | Definition |
| --- | --- |
| thermal equilibrium | the state of heat transfer in a system such that the incoming and outgoing quantities of heat are equal |
| thermodynamic venting | the process of a fluid being extracted from a tank, expanded through a Joule-Thomson valve to produce a temperature drop, subsequently routed through a heat exchanger to cool the remaining fluid in the tank, and then vented overboard |
| triple point | the unique temperature and pressure at which the gaseous, liquid, and solid states of a substance can coexist in equilibrium |
| turbopump | an assembly consisting of one or more pumps driven by a hot-gas turbine |
| ullage | volume by which a container (tank) falls short of being full of liquid |
| vent valve | pressure-relieving shutoff valve that is operated on external command, as contrasted to a relief valve, which opens automatically when pressure reaches a given point |
| viscosity | fluid resistance to flow caused by internal molecular attraction |
| water hammer | high surge pressures that result from the sudden stoppage of fluid flowing in a conduit |
| Zener diode | silicon semiconductor device used especially as a voltage regulator |
| zero-g | condition of a net zero-gravity field with reference to the system, i. e., weightlessness |

| Symbol | Definition |
| --- | --- |
| A | feedline duct cross-sectional area, in.$^2$ |
| ACS | attitude control system |
| APS | auxiliary propulsion system |
| C | concentration of dissolved gas, lbm of pressurant per lbm of propellant |
| c | speed of sound, ft/sec |
| ECO | engine cutoff |
| F | engine thrust, lbf |
| GG | gas generator |

| Symbol | Definition |
|---|---|
| GSE | ground support equipment |
| $g$ | acceleration due to gravity, ft/sec$^2$ |
| $g_c$ | gravitational conversion factor, 32.17 lbm-ft/lbf-sec$^2$ |
| H | height of propellant liquid column, in. |
| Hz | cycles per second |
| K | (1) line loss coefficient, dimensionless<br>(2) Henry's constant, lbm of pressurant per lbm of propellant-psi |
| LEM | lunar excursion module |
| $M_u$ | pressurant mass, lbm |
| MR | mixture ratio: ratio of oxidizer mass flowrate to fuel mass flowrate |
| MTI | main tank injection |
| MW | molecular weight, lbm/lbm-mole |
| NC | normally closed |
| NO | normally open |
| NPSH | net positive suction head, lbf-ft/lbm |
| NPSP | net positive suction pressure, psi |
| NPVS | nonpropulsive vent system |
| n | number of heat exchangers operating, dimensionless |
| P | pressure, psi |
| $P_{acc}$ | propellant hydrostatic pressure due to acceleration, psi |
| $P_{fl}$ | feedline pressure when void of propellant, psi |
| $P_{fric}$ | propellant feedline pressure loss due to friction, psi |
| $P_{iv}$ | isolation valve inlet pressure, psi |

| Symbol | Definition |
|---|---|
| $P_o$ | total pressure, psi |
| PU | propellant utilization |
| p | gas partial pressure, psi |
| Q | volumetric flowrate, $ft^3$/sec |
| R | universal gas constant, (lbf·ft)/(lbm-mole·°R) |
| RCS | reaction control system |
| Re | Reynolds number, dimensionless |
| RHU | radioisotope heater unit |
| S | maximum water hammer pressure, psi |
| SPS | service (module) propulsion system |
| T | temperature, °R |
| V | volume, $ft^3$ |
| VCS | velocity control subsystem |
| VPS | vernier propulsion system |
| W | projected vehicle weight, lbm |
| $\dot{w}$ | mass flowrate, lbm/sec |
| Z | compressibility factor, dimensionless |
| $\rho$ | density, lbm/$ft^3$ |
| $\sigma$ | standard deviation |

**Subscripts**

| | |
|---|---|
| f | final |
| i | initial |

## Subscripts

| | |
|---|---|
| $\ell$ | liquid |
| max | maximum |
| p | propellant (liquid) |
| sv | storage vessel (pressurant storage tank) |
| t | tank |
| u | ullage |
| v | vapor |

| Material | Identification |
|---|---|
| A-50 | mixture of 50% hydrazine and 50% unsymmetrical dimethylhydrazine, propellant grade per MIL-P-27402 |
| ammonia | anhydrous ammonia, propellant grade per JAN-A-182 |
| $ClF_3$ | liquid chlorine trifluoride, propellant grade per MIL-P-81399 |
| fluorine | elemental fluorine ($F_2$) in its liquid form ($LF_2$) used as a cryogenic propellant per MIL-P-27405 |
| Freon | trademark of E. I. du Pont de Nemours and Co., Inc. for a family of fluorocarbons |
| $GH_2$ | gaseous hydrogen |
| $GN_2$ | gaseous nitrogen per MIL-P-27401 |
| GOX | gaseous oxygen |
| $H_2O_2$ | hydrogen peroxide per MIL-P-16005 |
| helium | pressurant helium (He) per MIL-P-27407 |
| IRFNA | inhibited red fuming nitric acid, propellant grade per MIL-P-7254 |
| Kel-F | trademark of 3 M Corp. for a high-molecular-weight polymer of chlorotrifluoroethylene |

| Material | Identification |
|---|---|
| $LH_2$ | liquid hydrogen, propellant grade per MIL-P-27201 |
| $LN_2$ | liquid nitrogen |
| $LO_2$ or LOX | liquid oxygen, propellant grade per MIL-P-25508 |
| MMH | monomethylhydrazine, propellant grade per MIL-P-27404 |
| Mylar | trademark of E. I. du Pont de Nemours and Company, Inc. for polyethylene terephthalate film |
| $NO_2$ | nitrogen dioxide |
| $N_2H_4$ | hydrazine, propellant grade per MIL-P-26536 |
| $N_2O_4$ | nitrogen tetroxide, propellant grade per MIL-P-26539 or MSC-PPD-2 |
| neoprene | polychloroprene, a synthetic elastomer |
| nylon | thermoplastic polyamide |
| RP-1 | high-energy kerosene-base hydrocarbon fuel, propellant grade per MIL-R-25576 |
| Teflon | trademark of E. I. du Pont de Nemours and Company, Inc. for tetrafluorethylene polymer |
| UDMH | unsymmetrical dimethylhydrazine, propellant grade per MIL-P-27408 |
| 304, 347 | austenitic stainless steels |

## ABBREVIATIONS

| Organization | Identification |
|---|---|
| AFFTC | Air Force Flight Test Center |
| AFRPL | Air Force Rocket Propulsion Laboratory |
| AIAA | American Institute of Aeronautics and Astronautics |
| ASME | American Society of Mechanical Engineers |
| COSMIC | Computer Software Management and Information Center |

| Organization | Identification |
| --- | --- |
| CPIA | Chemical Propulsion Information Agency |
| GD/C | General Dynamics/Convair |
| GD/A | General Dynamics/Astronautics |
| IIT | Illinois Institute of Technology |
| ISA | Instrument Society of American |
| JAN | Joint Army-Navy |
| JANNAF | Joint Army-Navy-NASA-Air Force |
| JPL | Jet Propulsion Laboratory |
| MSFC | Marshall Space Flight Center |
| SD | Space Division |
| SID | Space and Information Division |
| SWRI | Southwest Research Institute |
| USAF | United States Air Force |

# REFERENCES


1. Holcomb, L. B.: Satellite Auxiliary-Propulsion Selection Techniques. Tech. Rep. 32-1505, Jet Propulsion Lab., Calif. Inst. Tech. (Pasadena, CA), Nov. 1, 1970.

2. Anon.: Turbopump Systems for Liquid Rocket Engines. NASA Space Vehicle Design Criteria Monograph, NASA SP-8107, August 1974.

3. Anon.: Liquid Rocket Metal Tanks and Tank Components. NASA Space Vehicle Design Criteria Monograph, NASA SP-8088, May 1974.

4. Anon.: Centaur Systems Summary. GDC-BGJ67-003, General Dynamics/Convair, April 1967.

5. Anon.: Saturn S-II Pressurization System Report. SID62-144, North American Aviation, Inc./SID, March 15, 1964, revised August 1966.

6. Anon.: Section II, Centaur Pneumatic System, Atlas-Centaur Flight Evaluation Report. GDC-BNZ66-026, General Dynamics/Convair, June 6, 1966.

7. Anon.: Pressurization Systems Design Guide. Vols. I and II: System Analysis and Selection. Rep. 2736, Aerojet-General Corp., September 1964, revised December 1965.

8. Anon.: Equilibrium Composition of Nitrogen Tetroxide. Liquid Propellants Handbook, RR63-38, North American Aviation, Inc./Rocketdyne, Dec. 1, 1963.

9. Sherman, A. L.; Gershman, R.; and Osugi, J. T.: Updated, Expanded, Fluid Properties Handbook. NASA Tech Brief 71-10078, April 1971.

10. Anon.: Liquid Propellant Manual (U). CPIA/M4, Chemical Propulsion Information Agency, The Johns Hopkins University Applied Physics Laboratory (Silver Spring, MD), July 1970. (CONFIDENTIAL)

11. Anon.: Liquid Propellants Handbook (U). Department of the Navy, Bureau of Aeronautics, Ships Installation Division (Washington, DC), October 1958. (Confidential – Modified Handling Authorized).

12. Marsh, W. R.; and Knox, B. P.: USAF Propellant Handbooks Hydrazine Fuels. AFRPL-TR-69-149, Vol. 1, Bell Aerospace Company, March 1970.

13. Anon.: Titan II Propulsion Handbook. WS107A-2, Aerojet-General Corp., March 1963.

14. Anon.: Study of the Reaction Mechanism and Thermal Decomposition of Certain Storable Propellants, Final Report. AFFTC-TR-61-30, North American Aviation, Inc./Rocketdyne, December 1960.

15. Schmitz, B. W.; Groudle, T. A.; and Kelly, J. H.: Development of the Post-Injection Propulsion System for the Mariner C Spacecraft. Tech. Rep. 32-830, Jet Propulsion Lab., Calif. Inst. Tech., April 1, 1966.

16. Brady, H. F.; DiStefano, D.; and Lukens, S.: Sterilizable Liquid Rocket Propulsion Systems. MCR-68-119, Martin Marietta Co., Part I, August 1968; Part II, September 1969.

17. Martin, J.; et al.: 1973 Viking Voyage to Mars. Astronaut. Aeron., vol. 7, no. 11, November 1969, pp. 30-59.

18. Pugmire, T. K.; Davis, W. S.; and Lund, W.: ATS-III Resistojet Thruster System Performance. J. Spacecraft Rockets, vol. 6, no. 7, July 1969, pp. 790-794.

19. Sackheim, R. L.: Survey of Space Applications of Monopropellant Hydrazine Propulsion Systems. Combustion Systems Laboratory, TRW Systems Group (Redondo Beach, CA), October 1973.

20. Holcomb, L. B.; and Lee, D. H.: Survey of Auxiliary-Propulsion Systems for Communications Satellites. AIAA Paper 72-515, AIAA 4th Communications Satellite Systems Conf. (Washington, DC), April 24-26, 1972.

21. Anon.: Aerospace Tanks. Vols. I and II. Rep. Contract NAS7-388, IIT Research Institute, 1969.

22. Sherman, A. L.; and Joy, M. L.: Parameterization Study of the S-IVB Liquid Oxygen Tank Pressurization System. Paper presented at 12th JANNAF Liquid Propulsion Meeting (Las Vegas, NV), November 1970.

23. Smith, W. W.: Hydrazine System Status Report. 1972 JANNAF Prop. Mtg., Monopropellant Hydrazine Propulsion System Sessions (New Orleans, LA), Nov. 27-29, 1972, CPIA Publ. 228, vol. 4, December 1972, pp. 53-69.

24. Nye, H. H.; and Moorman, D. W.: Lunar Orbiter Velocity Control System. J. Spacecraft Rockets, vol. 5, no. 2, February 1968, pp. 139-145.

25. Davis, M. L.; Allgeier, R. K., Jr.; Rogers, T. G.; and Rysavy, G.: The Development of Cryogenic Storage Systems for Space Flight. NASA SP-247, 1970.

26. Keller, W. F.; and Bogdanovic, J.: Development of a Hybrid Pressurization System. NOR69-269, Norair Div., Northrop Corp., May 1970.

27. Cady, E. C.; and Kendle, D. W.: Vehicle-Scale Investigation of a Fluorine Jet-Pump Liquid Hydrogen Tank Pressurization System. AIAA Paper 72-1133, AIAA/SAE 8th Joint Propulsion Specialist Conf. (New Orleans, LA), Nov. 29-Dec. 1, 1972.

28. Anon.: Development and Demonstration of Main Tank Injection (MTI) Pressurization System. RTD-TDR-63-1123, Martin Co., December 1963.

29. Huzel, D. K.; and Huang, D. H.: Design of Liquid Propellant Rocket Engines. Second ed., NASA SP-125, 1971.

30. Cady, E. C.: An Investigation of Fluorine-Hydrogen Main Tank Injection Pressurization. J. Spacecraft Rockets, vol. 9, no. 3, March 1972, pp. 158-164.

31. Ring, E.: Rocket Propellant and Pressurization Systems. Prentice-Hall, Inc. (Englewood Cliffs, NJ), 1964.

32. Key, C. F.: Compatibility of Materials with Liquid Oxygen. Vol. I, NASA TM-X-64711, 1972.

33. Obert, E. F.: Thermodynamics. McGraw-Hill Book Co., 1948, pp. 196-203.

34. Kunkle, J. S.; Wilson, S. D.; and Cota, R. A.: Compressed Gas Handbook. NASA SP-3045, revised 1970.

35. Anon.: Atlas Missile 83F Flight Test Evaluation Report. AOJ63-0054, General Dynamics/Astronautics, May 24, 1963, pp. 7-1 to 7-4.

*36. Foran, B.; and Williams, B. B.: Solubility of Helium in Nitrogen Tetroxide, Aerozine 50, and Methyl Hydrazine. SID65-232, North American Aviation, Inc./SID, March 15, 1963. (Unpublished)

*37. Hines. W. J.: Solubility of Nitrogen Gas in Propellants. SCH6-65-19, North American Aviation, Inc./SID, Rev. July 21, 1965. (Unpublished)

38. Anon.: Pressurization Systems Design Guide. Vol. III: Pressurant Gas Solubility in Liquid Propellants. DAC-60510-Fl, McDonnell-Douglas Corp./Astropower Laboratory, July 1968.

39. Anon.: Thor Booster Systems Familiarization Manual. McDonnell-Douglas Corp./McDonnell-Douglas Astronautics Co., December 1970.

40. Barrer, R. M.: Diffusion In and Through Solids. The University Press (Cambridge, England), 1941.

41. Bisciglia, N. R.: Propellant Standpipe and Acquisition Trap Assembly, Model Test Report. ASR 70-27, North American Rockwell Corp./Rocketdyne, Jan. 19, 1970.

42. Anon.: Design Guide for Pressurized Gas Systems. NASA CR-74400, IIT Research Institute, March 1966.

43. Howell, G. W.; and Weathers, T. M., eds.: Aerospace Fluid Component Designers' Handbook. Vols. I and II, Rev. D, RPL-TDR-64-25, TRW, Inc., February 1970.

44. Anon.: Contamination Control Handbook. NASA SP-5076, 1969.

45. Anon.: Propellant Tank Pressurization Analysis Program. COSMIC MFS-1506, Univ. of Georgia (Athens, GA), 1964.

*Dossier for the design criteria monograph "Pressurization Systems for Liquid Rockets". Unpublished. Collected source material available for inspection at NASA Lewis Research Center, Cleveland, Ohio.

46. Epstein, M.; and Anderson, R. E.: An Equation for the Prediction of Cryogenic Pressurant Requirements for Axisymmetric Propellant Tanks. Vol. 13 of Advances in Cryogenic Engineering. Plenum Press, 1968, pp. 207-214.

47. Nein, M. E.; and Thompson, J. F.: Experimental and Analytical Studies of Cryogenic Propellant Tank Pressurization Requirements. NASA TN D-3177, 1966.

48. Nein, M. E.; and Thompson, J. F.: Prediction of Propellant Tank Pressurization Requirements by Dimensional Analysis. NASA TN D-3451, 1966.

49. Roudebush, W. H.: An Analysis of the Problem of Tank Pressurization during Outflow. NASA TN D-2585, 1965.

50. DeWitt, R. L.; Stochl, R. J.; and Johnson, W. R.: Experimental Evaluation of Pressurant Gas Injectors During the Pressurized Discharge of Liquid Hydrogen. NASA TN D-3458, 1966.

51. Johnson, W. R.: Helium Pressurant Requirements for Liquid-Hydrogen Expulsion Using Submerged Gas Injection. NASA TN D-4102, 1967.

52. Stochl, R. J.; and DeWitt, R. L.: Temperature and Liquid-Level Sensor for Liquid-Hydrogen Pressurization and Expulsion Studies. NASA TN D-4339, 1968.

53. Stochl, R. J.; and DeWitt, R. L.: Pressurant Gas Requirements for the Pressurized Discharge of Liquid Hydrogen from Propellant Tanks. NASA TM-X-52573, 1969.

54. Stochl, R. J.; Masters, P. A.; DeWitt, R. L.; and Maloy, J. E.: Gaseous-Hydrogen Requirements for the Discharge of Liquid Hydrogen from a 1.52-Meter- (5-ft-) Diameter Spherical Tank. NASA TN D-5336, 1969.

55. Stochl, R. J.; Masters, P. A.; DeWitt, R. L.; and Maloy, J. E.: Gaseous-Hydrogen Pressurant Requirements for the Discharge of Liquid Hydrogen from a 3.96-Meter- (13-ft-) Diameter Spherical Tank. NASA TN D-5387, 1969.

56. Stochl, R. J.; Maloy, J. E.; Masters, P. A.; and DeWitt, R. L.: Gaseous-Helium Requirements for the Discharge of Liquid Hydrogen from a 1.52-Meter- (5-ft-) Diameter Spherical Tank. NASA TN D-5621, 1970.

57. Stochl, R. J.; Maloy, J. E.; Masters, P. A.; and DeWitt, R. L.: Gaseous-Helium Requirements for the Discharge of Liquid Hydrogen from a 3.96-Meter- (13-ft-) Diameter Spherical Tank. NASA TN D-7019, 1970.

58. Masters, P. A.: Computer Programs for Pressurization (Ramp) and Pressurized Expulsion from a Cryogenic Liquid Propellant Tank. NASA TN D-7504, 1974.

59. Montgomery, J. D.; Page, G. R.; and Scott, O. L.: Pressurization System for Use in the Apollo Service Propulsion System – Computer Utilization Manual. MCR-66-39, Martin Marietta Corp., July 1966.

60. Anon.: Liquid Rocket Pressure Regulators, Relief Valves, Check Valves, Burst Disks, and Explosive Valves. NASA Space Vehicle Design Criteria Monograph, NASA SP-8080, March 1973.

61. Anon.: Atlas SLV-3 Space Launch Vehicle Flight Evaluation Report. SLV-3 5802, General Dynamics/Convair, Dec. 16, 1966.

62. Anon.: Section II, Centaur Pneumatic System, Atlas-Centaur Flight Evaluation Report. GDC-BNZ66-059, General Dynamics/Convair, March 15, 1967.

63. Baumeister, T.; and Marks, L. S., eds.: Standard Handbook for Mechanical Engineers. Seventh ed., McGraw-Hill Book Co., 1967.

64. Perry, R. H.; Chilton, C. H.; and Kirkpatrick, S. D., eds.: Perry's Chemical Engineers' Handbook. Fourth ed., McGraw-Hill Book Co., 1969.

65. Steele, R.: Titan III-C Hydrazine Attitude Control Systems Users' Manual. MCR-69-543, Martin Marietta Corp., November 1969.

66. Carlson, R. A.: The Design, Development, and Qualification of the Pioneer F & G Propulsion System. 1972 JANNAF Prop. Mtg., Monopropellant Hydrazine Propulsion System Sessions (New Orleans, LA), Nov. 27-29, 1972, CPIA Publ. 228, vol. 4, December 1972, pp. 19-36.

67. Anon.: Saturn V Launch Vehicle Flight Evaluation Report – AS-509, Apollo Mission. MPR-SAT-FE-71-1, NASA Marshall Space Flight Center, April 1971.

68. Anon.: Liquid Rocket Disconnects, Couplings, Fittings, Joints, and Seals. NASA Space Vehicle Design Criteria Monograph, NASA SP-8119 (to be published).

69. Labus, T. L.; Aydelott, J. C.; and Amling, G. E.: Zero-Gravity Venting of Three Refrigerants. NASA TN D-7480, 1974.

70. Labus, T. L.; Aydelott, J. C.; and Lacovic, R. F.: Low-Gravity Venting of Refrigerant 11. NASA TM-X-2479, 1972.

71. Aydelott, J. C.; and Spuckler, C. M.: Venting of Liquid Hydrogen Tankage. NASA TN D-5263, 1969.

72. Baud, K. W.; et al.: Successful Restart of a Cryogenic Upper-Stage Vehicle After Coasting in Earth Orbit. NASA TM-X-1649, 1968.

73. Anon.: Sections 11 and 12, Saturn S-IVB-503N Stage Flight Evaluation Report. SM-47006, McDonnell-Douglas Astronautics Co., March 1969.

74. Abramson, E. N.: The Dynamic Behavior of Liquids in Moving Containers. NASA SP-106, 1966.

75. Anon.: Postflight Evaluation of Atlas-Centaur AC-8. NASA TM-X-1343, 1967.

76. Anon.: Slosh Suppression. NASA Space Vehicle Design Criteria Monograph, NASA SP-8031, May 1969.

77. Chen, I. M.; Zukowski, E. E.; and Turley, A. W.: Propellant System Technology for Large Launch Vehicles Under Low Gravity. Sec. I, SD67-934, North American Aviation, Inc./SD, October 1967.

78. Stark, J. A.; and Mitchell, R. C.: Study of Vapor/Liquid Separators for Venting Cryogenic Propellant Tanks in Space. NASA TM-X-60666, Proc. Conf. on Long-Term Cryo-Propellant Storage in Space (Marshall Space Flight Center, AL), Oct. 12-13, 1966.

79. Szabo, S. V., Jr.; et al.: Atlas-Centaur Flight AC-4 Coast-Phase Propellant and Vehicle Behavior. NASA TM-X-1189, 1965.

80. Anon.: Postflight Evaluation of Atlas-Centaur AC-4. NASA TM-X-1108, 1965.

81. Tracy, J. M.: Apollo Service Module Propulsion Systems Passive Life for Long-Duration Space Missions. SD68-969, North American Rockwell Corp./SD, November 1968.

*82. Kirkpatrick, C. R.: Functional Description of Gemini Propulsion Systems, Components, and Component Sub-Assemblies. II.5388-1075, North American Aviation, Inc./Rocketdyne, May 13, 1965. (Unpublished)

*83. Anon.: Functional Requirement, Mariner Mars 1971 Flight Equipment, Propulsion Subsystem. M71-4-2010, Jet Propuslion Lab., Calif. Inst. Tech., Nov. 5, 1968. (Unpublished)

84. Anon.: Atlas Space Launch Vehicle Systems Summary. GD/C-BGJ67-001, General Dynamics/Convair, February 1967.

85. Anon.: Mariner Mars Orbiter 1971 Propulsion Subsystem, Technical Volume. R-7750P-1, North American Rockwell Corp./Rocketdyne, Dec. 20, 1968, pp. 11-20.

*86. Absalom, J. G.: Dynamic Analysis of SE-5 Nitrogen Pressure Regulator and Associated Plumbing. II.8137-4070, North American Aviation, Inc./Rocketdyne, March 8, 1968. (Unpublished).

87. Anon.: Section 12, Performance Characterization. Status Report, Missile B, Phase I Extension. R-3954, North American Aviation, Inc./Rocketdyne, Dec. 28, 1962.

*88. Metzger, D. V.: Component Malfunction Analysis, Rocketdyne Engine Model SE-9, Martin Transtage Model 624-A. SFRR 3394-017 (Rev. A), North American Aviation, Inc./Rocketdyne, Dec. 14, 1963. (Unpublished)

89. Anon.: Flow Decay: Impaired Flow in Nitrogen Tetroxide Propulsion Systems Caused by Corrosion Product Deposits. Special Technical Report, AFRPL-TR-68-220, North American Rockwell Corp./Rocketdyne, November 1968.

90. Anon.: Liquid Rocket Actuators and Operators. NASA Space Vehicle Design Criteria Monograph, NASA SP-8090, May 1973.

*Dossier for the design criteria monograph "Pressurization Systems for Liquid Rockets". Unpublished. Collected source material available for inspection at NASA Lewis Research Center, Cleveland, Ohio.

91. Carden, W.; et al.: Reliability Analysis Study of SE5-3A Secondary Propulsion System. R-6795, North American Aviation, Inc./Rocketdyne, Feb. 7, 1967.

*92. Hastings, G.: Heat Exchanger Carbon-Fouling Investigation Progress Report. CDR7121-2186, North American Aviation, Inc./Rocketdyne, Dec. 12, 1967. (Unpublished)

*93. Cleveland, J. R.: Analysis of J-2 Heat Exchanger Data. IL6121-2182, North American Aviation, Inc./Rocketdyne, July 22, 1966. (Unpublished)

94. Friedly, J. C.: Stability Investigation of Thermally Induced Flow Oscillations in Cryogenic Heat Exchangers. S-68-1023, General Electric Research and Development Center, October 1967.

95. Munson, L.; and Miller, W. S.: A Study of Cooldown of Metals, Flow Instability, and Heat Transfer in Two-Phase Flow of Hydrogen. Res. Rep. 68-4, North American Aviation, Inc./Rocketdyne, February 1968.

96. Hastings, G. A.: Design Report: J-2S Oxidizer Turbine Exhaust Duct and Heat Exchanger. CDR 7121-2101, North American Aviation, Inc./Rocketdyne, revised Sept. 28, 1967.

97. Thurston, R. S.: Thermal-Acoustic Oscillations Induced by Forced Convection Heating of Dense Hydrogen. LA-3543, Los Alamos Scientific Laboratory, April 1966.

98. Anon.: Liquid Rocket Lines, Bellows, Flexible Hoses, and Filters. NASA Space Vehicle Design Criteria Monograph (to be published).

99. Minnar, E. J.; and Recchione, P. A., eds.: ISA Transducer Compendium. Plenum Press (New York, NY), 1963.

*100. Novoryta, R. J.: Pressurant Consumption Analysis for an SE5-2 Duty Cycle Using 9.6 lb $GN_2$. SEM2386-7013A, North American Aviation, Inc./Rocketdyne, June 5, 1962. (Unpublished)

101. Anon.: Digital Computer Program APD155 Performance Simulation of Apollo Service Propulsion System. SID66-1274, North American Aviation, Inc./SID, October 1966.

102. Roudebush, W. H.; and Mandell, D. A.: Analytical Investigation of Some Important Parameters in the Pressurized Liquid Hydrogen Tank Outflow Problem. Proc. Conf. on Propellant Tank Pressurization and Stratification (Marshall Space Flight Center, AL), Jan. 20-21, 1965.

103. Timmerhaus, K. D., ed.: Cryogenic Thermal Stratification and Interfacial Phenomena for Heated Tanks During Prolonged Orbital Flight. Vol. 18 of Advances in Cryogenic Engineering. Plenum Press, 1973, pp. 81-91.

104. Anon.: Section 11.0, S-II-4 Flight Final Test Report. SD69-98, North American Rockwell Corp./SD, May 16, 1969.

105. Anon.: SE5-5 Nitrogen Regulator, P/N RS002691 – Thirty-Day Nitrogen Tetroxide Vapor Exposure Test Report. SEM1159/SE5/2001, North American Rockwell Corp./Rocketdyne, Jan.21, 1971.

*Dossier for the design criteria monograph "Pressurization Systems for Liquid Rockets". Unpublished. Collected source material available for inspection at NASA Lewis Research Center, Cleveland, Ohio.

106. Anon.: Components Manual, Propulsion and Fluid Systems Components for the S-II Stage of Saturn V. SD72-SA-0077, North American Rockwell Corp./Space Division, April 10, 1972.

*107. Lee, J. C.: Temperature Rise in $N_2O_4$ Liquid Line in Gemini GT-5 System. SEM5388-1000, North American Aviation, Inc./Rocketdyne, Oct. 18, 1965. (Unpublished)

108. Lee, J. C.: Counter-Permeation Phenomenon in Bladdered Expulsion Tank. Proc. Symposium on Low-Gravity Propellant Orientation and Expulsion in Space Vehicles, AIAA/Aerospace Corp. (Los Angeles, CA), May 21-23, 1968, Western Periodicals (N. Hollywood, CA), 1968, pp. 165-174.

109. Anon.: Task D, Elimination of Permeation and Bubble Formation, Apollo RCS Positive Expulsion Tankage Product Improvement Program. Rep. 8514-828003 (Contract NAS9-7182), Bell Aerosystems Co., July 1967 through September 1969.

110. Anon.: Manned Orbiting Laboratory (MOL) Attitude Control and Translation Subsystem Propellant Tank Assemblies (Oxidizer and Fuel). R-6810P-1, North American Aviation, Inc./Rocketdyne, Dec. 8, 1966.

*111. Lee, J. C.: Gas Permeation in Gemini GT-9 OAMS Tank. IL-380-001, North American Aviation, Inc./Rocketdyne, June 7, 1966. (Unpublished)

112. Anon.: MM '71 Rocket Engine Assembly Type Approval Test Program Final Report. R-8357, North American Rockwell Corp./Rocketdyne, April 20, 1970.

113. Pistiner, J. S.: On-Off Control System for Attitude Stabilization of a Space Vehicle. ARS J., vol. 29, no. 4, April 1959, pp. 283-289.

114. McDermott, C. E.; et al.: Dynamic Performance of Surveyor Throttleable Rocket Engine Operating on Propellants Containing Dissolved Gas. AIAA Paper 66-949, AIAA Third Annual Meeting (Boston, MA), Nov. 29-Dec. 2, 1966.

*115. Lee, J. C.: SE-10 Termination Status Report – Injector Stability Analysis. SEM5334-1003, North American Aviation, Inc./Rocketdyne, Feb. 12, 1965. (Unpublished)

116. Anon.: Manned Orbital Laboratory (MOL) Thrust Chamber Assembly (Low-Thrust), Technical. R-15081P-1, North American Aviation, Inc./Rocketdyne, March 3, 1966, pp. 110-119.

*117. Lee, J. C.: Propellant Valve Leakage in SE-5 Propulsion System. North American Rockwell Corp./Rocketdyne, Feb. 24, 1969. (Unpublished)

118. Rose, R. G.; and Harris, R.: Dynamic Analysis of a Coupled Structural/Pneumatic System Longitudinal Oscillation for Atlas Vehicles. AIAA Paper 64-483, AIAA Second Annual Meeting, (Washington, DC), June 1964.

119. Rose, R. G.: Dynamics of the Atlas 5-cps Longitudinal Oscillation Following Launch as Related to the Tank Pressure Regulation System. Vol. 1: Longitudinal Model Development, GD/A 63-0712 General Dynamics/Astronautics, Dec. 31, 1963.

*Dossier for the design criteria monograph "Pressurization Systems for Liquid Rockets". Unpublished. Collected source material available for inspection at NASA Lewis Research Center, Cleveland, Ohio

120. Gerlach, C. R.; Shroeder, E. C.; Bass, R. L., III; and Holster, J. L.: Bellows Flow-Induced Vibrations and Pressure Loss. SWRI Proj. 02-2119, Southwest Research Institute, April 13, 1973.

121. Megyesy, E. F.: Pressure Vessel Handbook. Pressure Vessel Handbook Publishing, Inc. (Tulsa, OK), 1973.

*122. Anon.: Study of Low-Pressure Fuel Supply System for a Liquid-Propellant Space Vehicle. Pesco Products Div., Borg-Warner Corp., and Aircraft Accessories Turbine Dept., General Electric Co., August 1960.

123. Anon.: Revised Liquid Propellant Engine Manual (U). CPIA Manual M5 (Revised), January 1972. (CONFIDENTIAL)

124. Anon.: Don't Overlook Solid Propellant Gas Generators. Hydraulics and Pneumatics, vol. 25, no. 3, March 1972, pp. 99-102.

125. Much, R. C.: Design and Operational Features of a Dual Mode Hydrazine Reaction Control System. 1972 JANNAF Prop. Mtg., Monopropellant Hydrazine Propulsion System Sessions (New Orleans, LA), Nov. 27-29, 1972, CPIA Publ. 228, vol. 4, December 1972, pp. 37-52.

126. Hillbrath, H. S.; Dill, W. P.; and Wacker, W. A.: The Choking Pressure Ratio of a Critical Flow Venturi. ASME Paper 73-WA/FM-7, ASME Winter Annual Meeting (Detroit, MI), Nov. 11-15, 1973.

127. Johnson, R. C.: Real Gas Effects in Critical-Flow-Through Nozzles and Tabulated Thermodynamic Properties. NASA TN D-2565, 1965.

128. Kays, W. M.; and London, A. L., eds.: Compact Heat Exchangers. Second ed., McGraw-Hill Book Co., 1964.

129. Anon.: Prevention of Coupled Structure-Propulsion Instability (Pogo). NASA Space Vehicle Design Criteria Monograph, NASA SP-8055, October 1970.

*Dossier for the design criteria monograph "Pressurization Systems for Liquid Rockets". Unpublished. Collected source material available for inspection at NASA Lewis Research Center, Cleveland, Ohio.

# NASA SPACE VEHICLE DESIGN CRITERIA MONOGRAPHS ISSUED TO DATE

ENVIRONMENT

| | |
|---|---|
| SP-8005 | Solar Electromagnetic Radiation, Revised May 1971 |
| SP-8010 | Models of Mars Atmosphere (1974), Revised December 1974 |
| SP-8011 | Models of Venus Atmosphere (1972), Revised September 1972 |
| SP-8013 | Meteoroid Environment Model–1969 (Near Earth to Lunar Surface), March 1969 |
| SP-8017 | Magnetic Fields–Earth and Extraterrestrial, March 1969 |
| SP-8020 | Surface Models of Mars (1975), Revised September 1975 |
| SP-8021 | Models of Earth's Atmosphere (90 to 2500 km), Revised March 1973 |
| SP-8023 | Lunar Surface Models, May 1969 |
| SP-8037 | Assessment and Control of Spacecraft Magnetic Fields, September 1970 |
| SP-8038 | Meteoroid Environment Model–1970 (Interplanetary and Planetary), October 1970 |
| SP-8049 | The Earth's Ionosphere, March 1971 |
| SP-8067 | Earth Albedo and Emitted Radiation, July 1971 |
| SP-8069 | The Planet Jupiter (1970), December 1971 |
| SP-8084 | Surface Atmospheric Extremes (Launch and Transportation Areas), Revised June 1974 |
| SP-8085 | The Planet Mercury (1971), March 1972 |
| SP-8091 | The Planet Saturn (1970), June 1972 |
| SP-8092 | Assessment and Control of Spacecraft Electromagnetic Interference, June 1972 |
| SP-8103 | The Planets Uranus, Neptune, and Pluto (1971), November 1972 |

| | |
|---|---|
| SP-8105 | Spacecraft Thermal Control, May 1973 |
| SP-8111 | Assessment and Control of Electrostatic Charges, May 1974 |
| SP-8116 | The Earth's Trapped Radiation Belts, March 1975 |
| SP-8117 | Gravity Fields of the Solar System, April 1975 |
| SP-8118 | Interplanetary Charged Particle Models (1974), March 1975 |

STRUCTURES

| | |
|---|---|
| SP-8001 | Buffeting During Atmospheric Ascent, Revised November 1970 |
| SP-8002 | Flight-Loads Measurements During Launch and Exit, December 1964 |
| SP-8003 | Flutter, Buzz, and Divergence, July 1964 |
| SP-8004 | Panel Flutter, Revised June 1972 |
| SP-8006 | Local Steady Aerodynamic Loads During Launch and Exit, May 1965 |
| SP-8007 | Buckling of Thin-Walled Circular Cylinders, Revised August 1968 |
| SP-8008 | Prelaunch Ground Wind Loads, November 1965 |
| SP-8009 | Propellant Slosh Loads, August 1968 |
| SP-8012 | Natural Vibration Modal Analysis, September 1968 |
| SP-8014 | Entry Thermal Protection, August 1968 |
| SP-8019 | Buckling of Thin-Walled Truncated Cones, September 1968 |
| SP-8022 | Staging Loads, February 1969 |
| SP-8029 | Aerodynamic and Rocket-Exhaust Heating During Launch and Ascent, May 1969 |
| SP-8030 | Transient Loads From Thrust Excitation, February 1969 |
| SP-8031 | Slosh Suppression, May 1969 |
| SP-8032 | Buckling of Thin-Walled Doubly Curved Shells, August 1969 |
| SP-8035 | Wind Loads During Ascent, June 1970 |

| | |
|---|---|
| SP-8040 | Fracture Control of Metallic Pressure Vessels, May 1970 |
| SP-8042 | Meteoroid Damage Assessment, May 1970 |
| SP-8043 | Design-Development Testing, May 1970 |
| SP-8044 | Qualification Testing, May 1970 |
| SP-8045 | Acceptance Testing, April 1970 |
| SP-8046 | Landing Impact Attenuation for Non-Surface-Planing Landers, April 1970 |
| SP-8050 | Structural Vibration Prediction, June 1970 |
| SP-8053 | Nuclear and Space Radiation Effects on Materials, June 1970 |
| SP-8054 | Space Radiation Protection, June 1970 |
| SP-8055 | Prevention of Coupled Structure-Propulsion Instability (Pogo), October 1970 |
| SP-8056 | Flight Separation Mechanisms, October 1970 |
| SP-8057 | Structural Design Criteria Applicable to a Space Shuttle, Revised March 1972 |
| SP-8060 | Compartment Venting, November 1970 |
| SP-8061 | Interaction with Umbilicals and Launch Stand, August 1970 |
| SP-8062 | Entry Gasdynamic Heating, January 1971 |
| SP-8063 | Lubrication, Friction, and Wear, June 1971 |
| SP-8066 | Deployable Aerodynamic Deceleration Systems, June 1971 |
| SP-8068 | Buckling Strength of Structural Plates, June 1971 |
| SP-8072 | Acoustic Loads Generated by the Propulsion System, June 1971 |
| SP-8077 | Transportation and Handling Loads, September 1971 |
| SP-8079 | Structural Interaction with Control Systems, November 1971 |
| SP-8082 | Stress-Corrosion Cracking in Metals, August 1971 |

| | |
|---|---|
| SP-8083 | Discontinuity Stresses in Metallic Pressure Vessels, November 1971 |
| SP-8095 | Preliminary Criteria for the Fracture Control of Space Shuttle Structures, June 1971 |
| SP-8099 | Combining Ascent Loads, May 1972 |
| SP-8104 | Structural Interaction With Transportation and Handling Systems, January 1973 |
| SP-8108 | Advanced Composite Structures, December 1974 |

GUIDANCE AND CONTROL

| | |
|---|---|
| SP-8015 | Guidance and Navigation for Entry Vehicles, November 1968 |
| SP-8016 | Effects of Structural Flexibility on Spacecraft Control Systems, April 1969 |
| SP-8018 | Spacecraft Magnetic Torques, March 1969 |
| SP-8024 | Spacecraft Gravitational Torques, May 1969 |
| SP-8026 | Spacecraft Star Trackers, July 1970 |
| SP-8027 | Spacecraft Radiation Torques, October 1969 |
| SP-8028 | Entry Vehicle Control, November 1969 |
| SP-8033 | Spacecraft Earth Horizon Sensors, December 1969 |
| SP-8034 | Spacecraft Mass Expulsion Torques, December 1969 |
| SP-8036 | Effects of Structural Flexibility on Launch Vehicle Control Systems, February 1970 |
| SP-8047 | Spacecraft Sun Sensors, June 1970 |
| SP-8058 | Spacecraft Aerodynamic Torques, January 1971 |
| SP-8059 | Spacecraft Attitude Control During Thrusting Maneuvers, February 1971 |
| SP-8065 | Tubular Spacecraft Booms (Extendible, Reel Stored), February 1971 |
| SP-8070 | Spaceborne Digital Computer Systems, March 1971 |
| SP-8071 | Passive Gravity-Gradient Libration Dampers, February 1971 |

| | |
|---|---|
| SP-8074 | Spacecraft Solar Cell Arrays, May 1971 |
| SP-8078 | Spaceborne Electronic Imaging Systems, June 1971. |
| SP-8086 | Space Vehicle Displays Design Criteria, March 1972 |
| SP-8096 | Space Vehicle Gyroscope Sensor Applications, October 1972 |
| SP-8098 | Effects of Structural Flexibility on Entry Vehicle Control Systems, June 1972 |
| SP-8102 | Space Vehicle Accelerometer Applications, December 1972 |

CHEMICAL PROPULSION

| | |
|---|---|
| SP-8087 | Liquid Rocket Engine Fluid-Cooled Combustion Chambers, April 1972 |
| SP-8113 | Liquid Rocket Engine Combustion Stabilization Devices, November 1974 |
| SP-8107 | Turbopump Systems for Liquid Rocket Engines, August 1974 |
| SP-8109 | Liquid Rocket Engine Centrifugal Flow Turbopumps, December 1973 |
| SP-8052 | Liquid Rocket Engine Turbopump Inducers, May 1971 |
| SP-8110 | Liquid Rocket Engine Turbines, January 1974 |
| SP-8081 | Liquid Propellant Gas Generators, March 1972 |
| SP-8048 | Liquid Rocket Engine Turbopump Bearings, March 1971 |
| SP-8101 | Liquid Rocket Engine Turbopump Shafts and Couplings, September 1972 |
| SP-8100 | Liquid Rocket Engine Turbopump Gears, March 1974 |
| SP-8088 | Liquid Rocket Metal Tanks and Tank Components, May 1974 |
| SP-8094 | Liquid Rocket Valve Components, August 1973 |
| SP-8097 | Liquid Rocket Valve Assemblies, November 1973 |
| SP-8090 | Liquid Rocket Actuators and Operators, May 1973 |
| SP-8080 | Liquid Rocket Pressure Regulators, Relief Valves, Check Valves, Burst Disks, and Explosive Valves, March 1973 |

| | |
|---|---|
| SP-8064 | Solid Propellant Selection and Characterization, June 1971 |
| SP-8075 | Solid Propellant Processing Factors in Rocket Motor Design, October 1971 |
| SP-8076 | Solid Propellant Grain Design and Internal Ballistics, March 1972 |
| SP-8073 | Solid Propellant Grain Structural Integrity Analysis, June 1973 |
| SP-8039 | Solid Rocket Motor Performance Analysis and Prediction, May 1971 |
| SP-8051 | Solid Rocket Motor Igniters, March 1971 |
| SP-8025 | Solid Rocket Motor Metal Cases, April 1970 |
| SP-8115 | Solid Rocket Motor Nozzles, June 1975 |
| SP-8114 | Solid Rocket Thrust Vector Control, December 1974 |
| SP-8041 | Captive-Fired Testing of Solid Rocket Motors, March 1971 |



NASA-Langley, 1976

NASA-MSFC