NASA Contractor Report 3751

Analysis of Large Space Structures Assembly

Man/Machine Assembly Analysis

LIBRARY COPY

1983

LANGLEY RESEARCH CENTER
LIBRARY, NASA
HAMPTON, VIRGINIA

CONTRACT NAS8-32989
DECEMBER 1983

25th Anniversary
1958-1983

NASA

NASA Contractor Report 3751

Analysis of Large Space Structures Assembly

Man/Machine Assembly Analysis

Essex Corporation
Huntsville, Alabama

Prepared for
George C. Marshall Space Flight Center
under Contract NAS8-32989

NASA
National Aeronautics
and Space Administration

Scientific and Technical
Information Branch

1983

FOREWORD

This Man/Machine Assembly Analysis (MMAA) was developed by Essex Corporation for NASA's George C. Marshall Space Flight Center (MSFC) under contract NAS8-32989. This revised and updated edition of the MMAA provides a means for evaluating three modes of Large Space Systems (LSS) Assembly -- manual, remote and automated -- and comparing the relative costs and efficiencies provided by these assembly modes. The MMAA includes information from very advanced technologies like robotics and artificial intelligence in which we can expect significant changes during the next several years. It also contains historical data on extravehicular activity (EVA) assembly techniques from actual missions and from simulations conducted at MSFC. The cost and productivity data are provided to allow LSS mission designers to decide the most appropriate and effective means to accomplish LSS assembly. The analytical techniques will eventually require the use of an interactive computer due to the volume of data available for well defined missions and the increased information available from advancing technologies.

Questions and comments concerning this assembly analysis should be addressed to Harry Watters, NASA/MSFC at (205) 453-4430 or to Nicholas Shields, Essex Corporation at (205) 883-7471.

TABLE OF CONTENTS

		Page
	FOREWORD	i
	KEY WORDS AND ABSTRACT	ii
	TABLE OF CONTENTS	iii
	LIST OF FIGURES	iv
	LIST OF TABLES	v
	ACRONYMS AND ABBREVIATIONS	vi
1.0	INTRODUCTION	1-1
1.1	Background and Purpose	1-1
1.2	Instructions to Users	1-1
1.3	Man/Machine Assembly Analysis Major Steps and Flow	1-4
	Step 1.0 - Description of Proposed LSS Mission	1-4
	Step 2.0 - Prepare Functional Analysis	1-6
	Step 3.0 - Prepare Assembly Scenarios	1-6
	Step 4.0 - Prepare Task Descriptions	1-6
	Step 5.0 - Develop Assembly Costs	1-7
	Step 6.0 - Integrate and Compare Assembly Alternatives	1-7
1.4	Evolutionary Approach to the Development of LSS Assembly Techniques	1-7
2.0	DATA BASE DESCRIPTION	2-1
2.1	Data Base A - Manual Assembly Techniques for Large Space Systems	2-2
2.2	Data Base B - Remotely Controlled Assembly Techniques for Large Space Systems	2-21
2.3	Data Base C - Automated Assembly Techniques for Large Space Systems	2-44
2.4	Data Base D - STS Cost Element Descriptions	2-55
3.0	PREPARE FUNCTIONAL ANALYSIS	3-1
4.0	PREPARE ASSEMBLY SCENARIO	4-1
4.1	Manual Assembly Scenario	4-4
4.2	Remote Assembly Scenario	4-5
4.3	Automated Assembly Scenario	4-7
5.0	PREPARE CANDIDATE TASK DESCRIPTIONS	5-1
5.1	Task Flow Worksheets	5-1
5.2	Task Description Worksheets	5-1
6.0	REFERENCES	6-1
7.0	BIBLIOGRAPHY	7-1
APPENDIX A -	Science and Applications Manned Space Platform (SAMSP) Assembly Analysis	A-1
APPENDIX B -	EVA Design and Operations Guidelines: Lessons Learned Through Zero-Gravity Simulation	B-1

LIST OF FIGURES

Number		Page
1-1:	General Relationship of Data Bases and Process Analyses for the MMAA	1-2
1-2:	Man/Machine Assembly Analysis Flow Diagram	1-5
2-1:	Escalation Indices by FY for Space System Development	2-1
2-2:	EVA and RMS Large Space Structure Deployment	2-4
2-3:	EVA Assist of Major Assembly Aid	2-5
2-4:	Standard Orbiter External Lighting Locations	2-8
2-5:	EVA Removal of an Equipment Module	2-12
2-6:	EVA Translation Along a Structure Column	2-14
2-7:	EVA Assembly Aid Being Locked into Position	2-16
2-8:	Transfer 3m Cube with RMS to EVA Crew	2-17
2-9:	EVA Assisted by RMS in Deploying Two Modules from Frame	2-20
2-10:	Maneuvering System Teleoperator, Basic Configuration	2-27
2-11:	Multi-Armed Teleoperated Servicing Spacecraft	2-30
2-12:	Artist's Concept of Early Teleoperator Manipulator Spacecraft	2-31
2-13:	SRMS Mechanical Arm General Arrangement	2-32
2-14:	SRMS System Concept	2-33
2-15:	Orbiter Aft Station - Location of SRMS Equipment	2-34
2-16:	Automated Beam Builder (MSFC's Development Model)	2-50
2-17:	Teleoperator Space Spider Machine	2-52
2-18:	Automated Orbital Servicer Simulator	2-54
4-1:	EVA Subjects Completing 9-Beam Large Space Structure	4-2
4-2:	EVA Time and Motion Assembly Analysis	4-3
4-3:	Advanced SASP	4-11
5-1:	Example Task Description	5-7
5-2:	Assembly Alternatives - Comparative Worksheet	5-8

LIST OF TABLES

		Page
1-1:	Evolutionary Development of LSS Assembly Techniques	1-9
2-1:	Orbiter Provided Lighting for Space Construction	2-7
2-2:	Crew Support Equipment Cost Summary	2-10
2-3:	EVA Performance Times by Task Element	2-11
2-4:	Earth-Based Automated Assemblers/Part Handlers	2-46
2-5:	Assemblers/Part Handlers 1st Unit, Flight Qualified Production Costs (Estimated FY85$)	2-46
2-6:	Automated System Application of Sensor Subsystems	2-47
2-7:	Standard Space Shuttle Price for Dedicated Users (through 1985)	2-56
4-1:	LSS Assembly Cost Estimating Work Sheet	4-17
5-1:	Task Flow Work Sheets	5-2

ACRONYMS AND ABBREVIATIONS

ABB	Automated Beam Builder
AFC	Automatic Flight Control
AFD	Aft Flight Deck
AFDO	Aft Flight Deck Operator
AFI	Automatic Fault Isolation
AI	Artificial Intelligence
AJ	Assembly Jig
ALSE	Astronaut Life Support Equipment
ALSS	Airlock Support System (Subsystem)
AM	Actuator Mechanism
AOS	Automated Orbital Servicer
ARAMIS	Automation, Robotics and Machine Intelligence Systems
ASASP	Advanced Science and Applications Space Platform
ASSY	Assembly
ATP	Acceptance Test Procedure
AUTO	Automatic
B&W	Black and White
Bhd	Bulkhead
BTU	British Thermal Unit
Bu, B/U	Backup
CB	Cargo Bay
C&D	Control and Display
CCTV	Closed Circuit Television
CCW	Counter clockwise
CDA	Command and Data Acquisition
CELSS	Controlled Ecological Life Support System
CID	Computer Interface Device, Charged Induction Device
CMA	Construction Manipulator Assembly
CMD	Command
c/o	Checkout
CPU	Central Processing Unit
CRT	Cathode Ray Tube
CTS	Communications and Tracking System
CVR	Configuration Verification Review
CW	Clockwise
DOF	Degrees of Freedom
EB	Electron Beam
ECLS	Environmental Control and Life Support
ECLSS	Environmental Control and Life Support Subsystem
ECS	Environmental Control System
EDL	Electric Discharge Laser
EOS	Electrophoresis Operations in Space
EPS	Electrical Power Subsystem
ESA	European Space Agency
ESOC	European Space Operations Center

EMS	Electronic Mail Satellite (antenna form)
EMU	Extravehicular Mobility Unit
ESM	Earth Science Module
EST	Estimate(d)
ET	External Tank, Event Timer
EVA	Extravehicular Activity
ETVP	Engineering and Technology Verification Platform (Rockwell)
FAB	Fabricate, Fabrication
FFTO	Free-Flying Teleoperator
FRUSA	Flexible Rolled-Up Solar Array
FSS	Flight Support System
FT	Feet
FT^2	Square feet
FT^3	Cubic feet
F/S	Feet per second
FU	Flight Unit
FUR	Facility Utilization Request (JSC)
FWD	Forward
FY	Fiscal Year
GEO	Geosynchronous Orbit
GEOSEPS	Geosynchronous Solar Electric Propulsion Stage
GMT	Greenwich Mean Time
GPC	General Purpose Computer
GSFC	Goddard Space Flight Center
HAL	High-Order Assembly Language
HM	Habitability Module
HDQ	Headquarters
HDWE	Hardware
HEUS	High Energy Upper Stage
HPA	Handling and Positioning Aid
HPSP	High-Performance Spaceplane
HRS	Hours
HW/SW	Hardware/software
IAA	International Aerospace Abstract
IMU	Inertial Measurement Unit
IR	Infrared
IUS	Inertial Upper Stage
IVA	Intravehicular Activity
JSC	Johnson Space Center
Kg	Kilogram
Km	Kilometer
KSC	Kennedy Space Center
kw	Kilowatt
kybd	Keyboard
LARC	Langley Research Center (Hampton, VA)
LASS	Large Area Space Structures
LEO	Low Earth Orbit
LEPS	Laser Electric Propulsion System
LERC	Lewis Research Center (Cleveland, OH)
LM	Logistics Module

LSAT	Large Space Structures Automated Assembly Technique
LSM	Life Science Module
LSS	Large Space System(s)/Structure(s)
LSU	Life Support Umbilical
LTPS	Laser Thermal Propulsion System
Man	Manual
MDC	Main Display Console
MDF	Manipulator Development Facility
MET	Mission Elapsed Time
MESA	Module Equipment Storage Assembly
Min	Minutes
MIT	Massachusetts Institute of Technology
MMAA	Man/Machine Assembly Analysis
MMS	Multimission Modular Spacecraft
MMU	Manned Maneuvering Unit
MNVR	Maneuver
MRL	Manipulator Retention Latches
MRWS	Manned Remote Work Station
MSFC	Marshall Space Flight Center
MTM	Methods-Time-Measurement
NASA	National Aeronautics and Space Administration
NBS	Neutral Buoyancy Simulator
NBS	National Bureau of Standards
NLS	Normal Line of Sight
NO	Number
NRCC	National Research Council of Canada
OCP	Open Cherry Picker
OCSE	Orbital Construction Support Equipment
OIM	Orbital Interface Module
OMS	Orbital Maneuvering System
OOA	On-Orbit Assembly Spacecraft
ORB	Orbiter
OSS	Orbiting Space Station
OTV	Orbit Transfer Vehicle
P/L	Payload
PAM	Payload Assist Module
PAM-A	PAM, Atlas-Centaur Class Spacecraft
PAM-D	PAM, Delta Class Spacecraft
PCU	Pressure Controller Unit (to be worn with EMU)
PDP	Plasma Diagnostics Package
PDRS	Payload Deployment and Retrieval Systems
PEP	Power Extension Pack
PIDA	Payload Installation and Deployment Aid
PIF	Payload Integration Facility
PFMA	Proto-Flight Manipulator Arm
POCC	Payload Operations Control Center
PNEU	Pneumatic
PRCS	Primary Reaction Control System
PRS	Payload Retention Subsystem
PSI	Pounds per square inch
PSP	Payload Signal Processor
R&D	Research and Development

ACRONYMNS AND ABBREVIATIONS (Continued)

RAT	Radio Astronomy Telescope
RAU	Remote Acquisition Unit
RCS	Reaction Control System
RDT&E	Research Development Test and Engineering
REM	Remote Engagement Mechanism
RF	Radio Frequency
RHC	Rotational Hand Controller
RMS	Remote Manipulator System
ROBSIM	Robotics Simulator Computer Program
ROM	Rough Order of Magnitude
ROSS	Remote Orbital Servicing System Concept
SA	Solar Array
SADE	Structural Assembly Demonstration Experiment
SAMSP	Science and Application Manned Space Platform
SASP	Science and Application Space Platform
SBS	Satellite Business Systems
SCAFEDS	Space Construction Automated Fabrication Experiment
SCE	Space Construction Experiment
SCEDS	Space Construction Experiment Definition Study
SCSAS	Space Construction Systems Analysis Study
SEC	Seconds
SEPS	Solar Electric Propulsion Stage
SIMFAC	An RMS Computer Simulation Facility at JSC
SM	Support Module
SMA	Slave Manipulator Arm
SMM	Solar Maximum Mission
SOC	Space Operations Center
SPEE	Special Purpose End Effector
SPS	Solar Powered Satellites
SRMS	Shuttle Remote Manipulator System
SRS	Self Replicating System
SSA	Structural Support Assembly
SSUS	Spinning Solid Upper Stage
ST	Space Telescope
STDN	Spacecraft Tracking and Data Network
STEM	Storable Tubular Extendible Member
STS	Space Transportation System
S/W	Software
SYN	Synchronous
SYS	System
TBD	To Be Determined
TBS	Task Breakdown Structure
TDRS	Tracking and Data Relay Satellite
TDRSS	Tracking and Data Relay Satellite System
THC	Translation Hand Controller
TRS	Teleoperator Retrieval System
TV	Television
UV	Ultraviolet
VCRS	Vernier Reaction Control System
VDU	Visual Display Unit
VLBI	Very Long Baseline Interferometer

ACRONYMNS AND ABBREVIATIONS (Continued)

W/O	Without
W/S	Workstation
WBS	Work Breakdown Structure
WETF	Weightless Environment Training Facility
ZGT	Zero Gravity Trainer

1.0 INTRODUCTION

1.1 BACKGROUND AND PURPOSE

As access to the space environment increases, more space applications will be identified and a wider range of users will be committing resources to participate in orbital operations. Production and processing facilities will evolve from the current experimental modules and the scale of these facilities will inaugurate the era of large space systems (LSS). These large space systems will be orbital operating platforms on which both individual and cooperative payloads will share the finite supporting resources of power supplies, communications, navigation and orientation, and the physical limits of earth orbit. The systems which are currently under consideration, or for which proposals are being developed, are structurally more fragile and larger than any previous payload placed into orbit and as such will require assembly in space.

The intention of the Man/Machine Assembly Analysis (MMAA) is to develop a technique for analyzing assembly alternatives for Large Space Systems and an analysis process which can be supported by data bases across a range of assembly alternatives. This document is an expansion of the original work as a result of modifications to the analysis techniques and additions to the supporting data bases.

The purpose of the document is to provide a means for analyzing a particular space structure in terms of assembly requirements and the economies of assembly alternatives applied to those requirements.

1.2 INSTRUCTIONS TO USERS

This assembly analysis is functionally divided into two major sections, the data bases and the processes for stepping through an assembly of a particular structure using the data bases. In addition to these is some background material on human factors considerations in space and the use of the shuttle as an assembly support system.

There are four data bases: one each for manual assembly techniques, remote assembly techniques, automated assembly techniques, and cost element descriptions for the Space Transportation System (STS). Additionally, there are four process descriptions: one each for preparation of the system assembly scenario; preparation of the functional analysis; preparation of task descriptions; and development of the Man/Machine Assembly Analysis (MMAA). The general relationship for these elements is shown in Figure 1-1.

For the purpose of analyzing the assembly alternatives for LSS, a logical order of procedure is to:

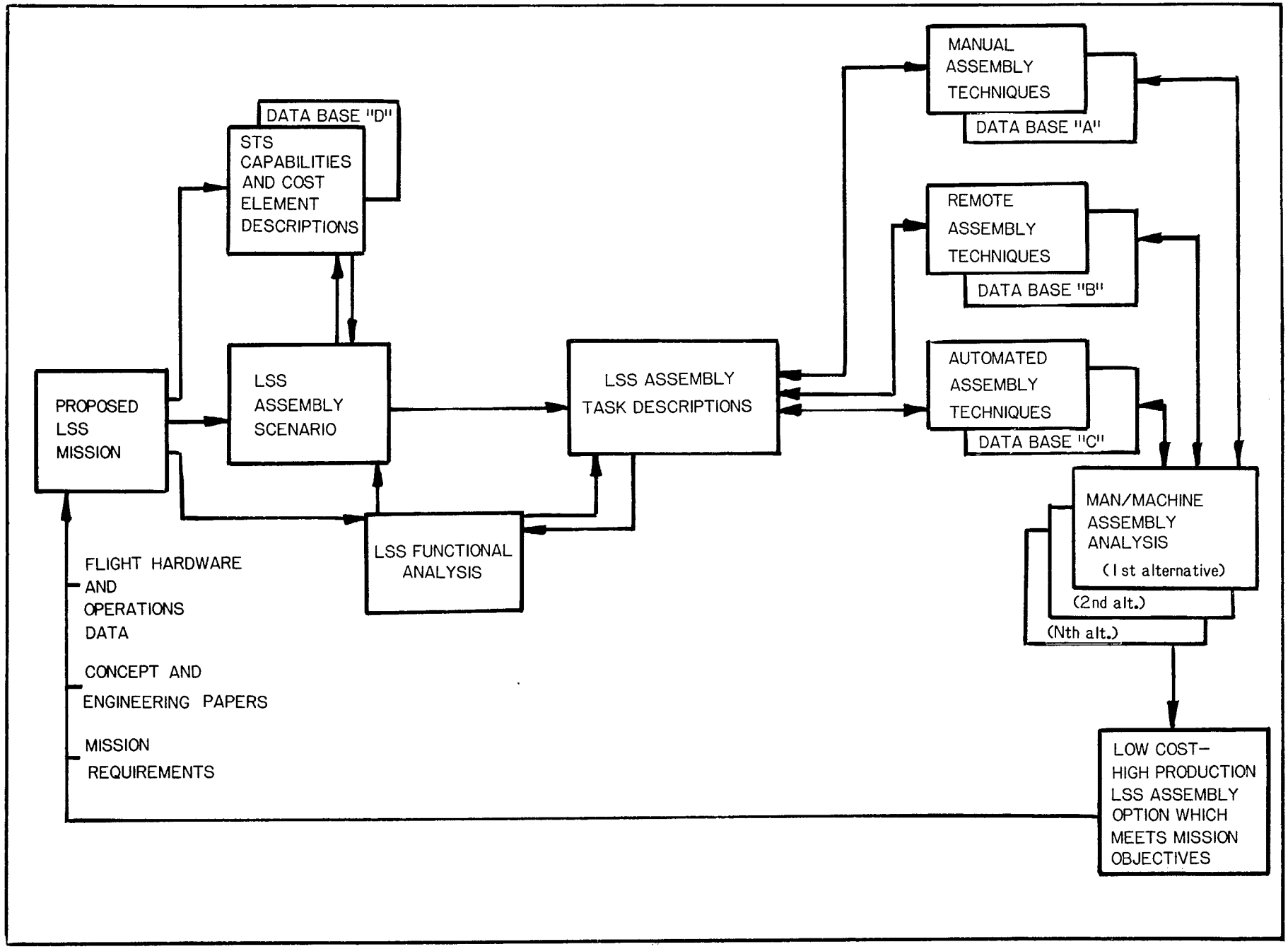

Figure 1-1: General Relationship of Data Bases and Process Analyses for the MMAA

1. Define the mission structure
2. Define the mission functions/objectives
3. Define an assembly scenario which addresses the requirements of the structure and the functions
4. Define the detailed tasks involved in the scenario
5. Compare structure, functions, scenarios and tasks for cost effectiveness.

This will give the analyst an organized insight into what has to be accomplished in order to meet the structure assembly requirements. The determination of the most effective and economical means to carry out the assembly comes after these processes are accomplished and the analyst determines comparative costs and performance times from the data bases.

A general strategy which has proved to be effective is to start with a basic understanding of the STS payload capabilities. The constraints imposed on STS payloads are volume, weight and on-orbit time. There are also limits on EVA and RMS operations, orbit characteristics, revisits to specific sites, payload support limits and communications limits. The STS costs at flight time, payload unique services and charges, ground support and similar financial considerations can also be viewed as limits or constraints. These are detailed in Data Base D, but a general familiarity with these is helpful as a first step toward assessing LSS concepts. Once the shuttle capabilities are understood, it is best to develop a thorough appreciation and understanding of the proposed LSS in terms of functions and objectives rather than just the hardware. The reason behind this suggestion is that an LSS concept is already constrained by the delivery via STS, so functions and objectives are necessarily tailored to STS criteria. Additional hardware constraints should not be imposed at the beginning of a mission description or concept formulation.

The description of the hardware and possible alternates to hardware configurations can be considered in light of the STS capabilities and the mission objectives. The LSS concept can be divided into components, subsystems, stock material, payloads, etc. in line with the STS payload bay capacity and the assembly logic of the LSS. From this point a packaging plan can be developed for the required shuttle flights and a deployment and assembly plan can be developed for each shuttle flight. Modification to the packaging plan can be made as necessary to accomplish one of several objectives: higher density of LSS materials, components and systems to reduce the number of delivery flights, organizing all EVA requirements into a single mission to reduce crew workloads and costs, and early manifests for remote or automated assembly support systems to increase productivity of the LSS assembly process. These exercises are a necessary part of the assembly analysis for they permit identification and assessment of a wide variety of alternatives in LSS program planning. It does place upon the analyst the responsibility for being familiar with the STS, the proposed LSS concept, and the mission objectives. But it also gives to the analyst the flexibility of studying options and proposing changes before mission definition is committed to hardware.

Once the several program alternatives have been developed and studied, the assembly analysis permits the analyst to exercise each alternative through three major routes (or modes) of the MMAA: manual assembly, remote assembly, and automated assembly. The details of each of these paths are presented in their respective data bases and are summarized in Section 1.3.

The object of exercising an LSS concept or concept alternatives through each path is to determine which assembly tasks can be performed most productively by which mode, and what mode mix yields the lowest LSS assembly cost. Cost, in this sense, can be dollars, time, probability of success, or some other appropriate dependent measure.

1.3 MAN/MACHINE ASSEMBLY ANALYSIS MAJOR STEPS AND FLOW

The organization of the MMAA is based on the requirement to integrate information from several data bases into a predictive model for mission assembly costs and levels of productivity. Figure 1-2 shows the interactive flow for deriving a low cost, high productivity assembly model.

Step 1.0 - Description of Proposed LSS Mission

The analyst will usually find a variety of information on a particular structure. Concept papers, study reports and engineering drawings are desirable types of information, but less formal data can also be used to augment this information. This would include technical discussions and presentations and information on advanced concepts which have no real definition and for which the analyst might have to rely on historical information based on other, but similar, structures.

It is fair to say that the degree of information maturity will vary from one LSS concept to another, but the MMAA does not require any particular level of concept development before it can be applied.

The first step is to gather as much information as is available and organize it into hardware descriptions, mission functional descriptions, STS support requirements, etc., for the convenience of the analyst. Lists of hardware can be developed and identified by physical data -- weight and length -- to make sure that the STS capacity is not exceeded for a structure packaging and delivery plan.

The purpose of gathering this information is to get as clear a picture of the structural components and the operations of the LSS mission as is possible. These are the data which can be manipulated during the assembly analysis to extract the most effective LSS assembly.

The principal source of data will usually be the concept developer or sponsoring activity, and where possible, the analyst should seek additional information directly from these sources.

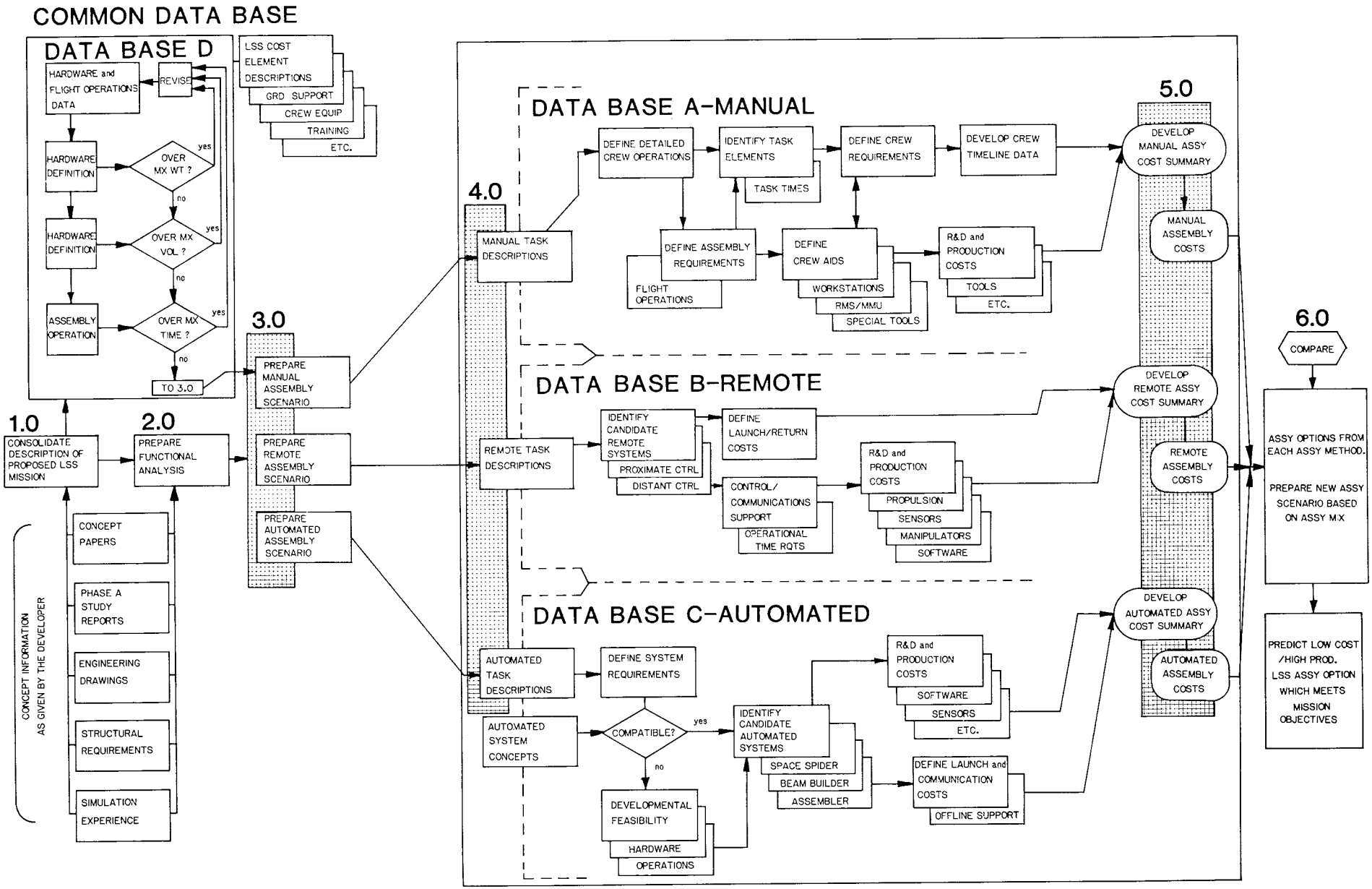

Figure 1-2: Man/Machine Assembly Analysis Flow Diagram

Step 2.0 - Prepare Functional Analysis

Derived from the primary data which describes the mission, i.e., the concept papers and study reports, the functional analysis serves as a guidepost for the LSS mission. While hardware, procedures and assembly details can be altered, the integrity of the mission functions must be maintained. During the preparation of the functional analysis, the analyst can develop different levels of mission functions such as primary and secondary functions or critical and non-critical functions. The mission functions do not need to be compared with other information such as the common Data Base D since the functional objectives of a mission are treated as "stand alone" information. Other data bases, on the other hand, are compared against in functional analysis.

The purpose of the functional analysis is to document thoroughly what must be accomplished during the assembly. This documentation will act as a bench mark during the analysis in light of the fact that the mission functions cannot be manipulated or changed by the analyst. The idea behind the MMAA is to derive the most economical way of accomplishing the objective by manipulating how it is done, not to manipulate what is accomplished in order to be most economical.

Step 3.0 - Prepare Assembly Scenarios

In preparing any of the assembly scenarios, data from the common data base, the LSS mission description and the functional analysis, are brought together as the basis for developing the assembly approaches. The assembly scenario, whether manual, remote or automated, is a sketch of the assembly mission which incorporates STS capabilities and limitations, the mission description and hardware definition into a time ordered layout of the mission. A minimum of three scenarios should be developed, one each for manual, remote and automated assembly approaches. Where defined alternatives exist within a particular mode, more than one scenario should be generated. Each scenario should be developed from those activities which are distinctly manual or remote or automated. A time to mix modes occurs later in the assembly analysis.

The assembly scenario provides the analyst the opportunity to develop an end-to-end assembly script, the purpose of which is to lay out the assembly chronology and assembly interactions. It is particularly useful as a basis for developing the more detailed task analyses.

Step 4.0 - Prepare Task Descriptions

Using a detailed task sheet, the analyst now makes a step-by-step progress through each of the assembly scenarios. The analyst needs to identify the smallest increments of the assembly tasks that make up the assembly sequences. The detailed task sheets permit the identification of the task cue, the actual task, who or what performs the task, the tools or support required, and the expected task output or results. Because the performance capabilities among the three assembly modes vary greatly, the task descriptions will reflect this variance. The variance in output, performance time, costs, technology, etc., will be the basis

for deciding the most appropriate assembly mode from among the alternatives. The product of the task descriptions is a detailed listing of what is to be accomplished, by whom, with what and when, during the assembly of an LSS. The task level information is the most useful for determining assembly costs and performance times.

Step 5.0 - Develop Assembly Costs

For each assembly alternative, a cost figure can be arrived at only after considering each of the following: packaging, stowage and support structures, predeployment operations, jigs, fixtures and accessories, fabrication, structural erection or deployment of frame, in process quality verification and operations monitoring, attachment of major elements and subsystem modules, and final checkout. Aside from these delivery and operation costs, there are technology development costs associated with advanced assembly techniques such as automated assembly, and costs for maintenance and repair. The delivery and operations costs associated with each of the assembly alternatives are based on the task descriptions and the cost and productivity information in the data bases. Having completed this, the analyst can now assign cost figures to a particular assembly mode or assembly task sequence. The objective is to find the relative cost differences between a strictly manual, strictly remote or strictly automated assembly approach for a given LSS concept. Further, the cost summary will yield information on what particular sequences of the assembly process can be accomplished most effectively using either manual, remote or automated systems. Effectiveness is measured by production rate (particularly if shuttle based), power or energy consumed, reliability, and component and mission costs. These segments can then be compared in Step 6.0 to develop a best case assembly scenario.

Step 6.0 - Integrate and Compare Assembly Alternatives

The final step in the assembly analysis is to take those assembly sequences which are comparatively low cost/high productivity sequences and combine them into an assembly scenario which is a best combination of the three separate approaches. This may yield a mission scenario which will be more efficient and economical than one accomplished solely by manual, remote or automated techniques and can be used to predict overall mission costs, new technology requirements, training requirements and hardware or system requirements.

1.4 EVOLUTIONARY APPROACH TO THE DEVELOPMENT OF LSS ASSEMBLY TECHNIQUES

The effectiveness of manual operations in space has been demonstrated for planned, contingency and emergency operations, and the effectiveness of remote and automated operations has been evaluated for planned space operations. Our ability to plan for future LSS operations is based in part on our historical success in these areas and partly on advances in technology planned for the remote and automated systems.

Current planning points in the direction of more autonomous operations for repetitive assembly tasks on very large structures and less

reliance on EVA operations. This is being done to reduce the risks to crew members to provide an assembly mode for environmental situations not easily adaptable to EVA, such as geosynchronous orbits, and to increase the productivity rate for the assembly of large space systems. Placing the human at a space based worksite has not been done without significant costs and risks, and the development of "surrogate" humans -- in terms of cognitive and manipulative capabilities -- is the focus for much of the current teleoperation and robotics research.

The ongoing programs in orbital assembly and platform construction, however, cannot be held in abeyance while we await the outcome of the research and development necessary to provide autonomously operating, artificially intelligent machines to replace EVA assembly. Most probably, we will follow along an evolutionary path which incorporates elements of the three major approaches to space operations -- manual, remote and automated operations -- building the technological base on precedent experience until we are capable of replacing most human skills and knowledge through machines.

Table 1-1 presents an evolutionary model which progresses from manual through remote to fully automated operations, listing the strengths and risks for each of the model's 12 transitional stages.

TABLE 1-1: Evolutionary Development of LSS Assembly Techniques
1. Manual Assembly 2. Manual Assembly with Minor Tools and Aids 3. Manual Assembly with Major Tools and Support Systems 4. Manual Assist of Machine Systems 5. Remote Assembly with Proximate Control 6. Remote Assembly with Distant Control 7. Remote Assembly with Preprogrammed Subroutines 8. Remote Assembly with Computerized Task Management - Operator Supervision 9. Automated Tasks with Operator Override 10. Automated Assembly, Preprogrammed 11. Automated Assembly with Alternative Logic 12. Automated Assembly with Artificial Intelligence

1. MANUAL ASSEMBLY

STRENGTHS	RISKS
A. Historical data from Apollo and Skylab	A. Human risk during EVA
B. Ease of simulation in neutral buoyancy simulator and KC-135	B. Limited duration
C. Comparatively low cost	C. Limited mobility
D. Decision maker at work site	D. Limited masses moved
E. Dexterous manipulation	E. Large support requirement in training, ground, logistics

EXAMPLES:
- o Non-Power, General Tool Kit
- o Film Changeout, ATM
- o Set Up Lunar Experiments

---

2. MANUAL ASSEMBLY WITH MINOR TOOLS AND AIDS

STRENGTHS	RISKS
A. Historical data and proven assembly capability	A. Human risk during EVA
B. Ease of simulation	B. Limited duration, mobility
C. Comparatively low cost	C. Large support requirement
D. Decision maker at task site	D. Damage using power tools
E. Dexterous manipulation	E. Limited masses moved
F. Increased output using power/ special tools	

EXAMPLES:
- o Power Tools, Special Tool Kits
- o Skylab Thermal Shield (MSFC)
- o Solar Maximum Repair Mission

TABLE 1-1: Evolutionary Development of LSS Assembly Techniques (Con't.)

3. MANUAL ASSEMBLY WITH MAJOR TOOLS AND SUPPORT SYSTEMS

STRENGTHS	RISKS
A. Relative increase in mobility	A. Human risk during EVA
B. Increase in masses moved and manipulation	B. Limited duration
C. Decision maker at task site	C. Untethered operations
D. Amenable to NB simulations	D. Limited historical data
E. Multimodal/cooperative technique (RMS, EVA, MMU)	E. Limited simulation data
	F. Dual/shared control systems for support
	G. Logistics requirements

EXAMPLES:
- o RMS with EVA, MMU
- o Lunar Rover, Apollo
- o Solar Shade - Skylab (JSC Parasol)
- o Open Cherry picker

4. MANUAL ASSIST OF MACHINE SYSTEMS

STRENGTHS	RISKS
A. Larger masses moved	A. EVA in proximity to large mobile hardware
B. Increased mobility	B. System failures
C. Multi-modal/cooperative	C. Shared control of major subsystems
D. Increased work output due to remote system	D. Limited duration
E. Decreased EVA workload	E. Untethered operations

EXAMPLES:
- o Teleoperator
- o RMS Shuttle Operations
- o Closed Cherry picker
- o Automated Beam Builder
- o Langley - Structures Assembly Platform

5. REMOTE ASSEMBLY WITH PROXIMATE CONTROL

STRENGTHS	RISKS
A. Direct viewing possible	A. RF link failure
B. Real time control of mobility/manipulator	B. Visual system failure
C. Large mass capability	C. Payload damage
D. Insertion/servicing	D. EVA backup/augmentation

EXAMPLES:
- o RMS on Shuttle Operations
- o Teleoperator via AFD
- o 30m ASASP Construction Manipulator

TABLE 1-1: Evolutionary Development of LSS Assembly Techniques (Con't.)

6. REMOTE ASSEMBLY WITH DISTANT CONTROL

STRENGTHS	RISKS
A. Large mass capability	A. Transmit/time delay
B. Operator safety from ground base	B. Payload damage
C. Logistic support available at control site	C. RF/visual link failure
D. Extended operations over long period of time	D. Transmit shadow
E. Insertion/servicing/extraction capability	

EXAMPLES:
- o Teleoperator via TDRSS
- o Viking Mission - Soil Sampling

7. REMOTE ASSEMBLY WITH PREPROGRAMMED SUBROUTINES

STRENGTHS	RISKS
A. Preprogrammed routines can be conducted during transmit shadows	A. Program failure/faults
B. Extended operating capability	B. Payload damage
C. Operator safety at ground base	C. Transmit/feedback time delay
D. Reduced operator workload	

EXAMPLES:
- o On-Orbit Approach and Docking
- o Beam Fabrication, Unmanned
- o Space Spider

8. REMOTE ASSEMBLY WITH COMPUTERIZED TASK MANAGEMENT - OPERATOR SUPERVISION

STRENGTHS	RISKS
A. Reduced operator workload	A. Program failure
B. Operations during transmit shadow	B. Payload damage
C. Extended operating time period	
D. Enhanced operator safety	

EXAMPLES:
- o Time Delay in Communications
- o Experiment Management on "Flyby" Missions
- o Housekeeping Operations on Platforms

9. AUTOMATED TASKS WITH OPERATOR OVERRIDE

STRENGTHS	RISKS
A. Minimum operator interaction	A. Transmit/feedback delays
B. Operator can command during emergency conditions	B. Program failure
	C. Tasks limited to program "competence"

EXAMPLES:
- o Orbital Emergency Override
- o Mitsibushi Steel Processing Plants

TABLE 1-1: Evolutionary Development of LSS Assembly Technique (Con't.)

10. AUTOMATED ASSEMBLY PREPROGRAMMED

STRENGTHS	RISKS
A. No operator in loop	A. No operator in loop
B. Small logistics requirement	B. Program failure/faults
	C. Task site anomalies not anticipated in program

EXAMPLES:
- o Munitions Assembly - U.S. Army
- o Automobile Assembly - Unimation Robots
- o Space Spider - Proposed, NASA

11. AUTOMATED ASSEMBLY WITH ALTERNATIVE LOGIC

STRENGTHS	RISKS
A. No operator in loop	A. No operator in loop
B. Small logistics requirement	B. Program failure/faults
C. Some anomalies corrected	C. All task site anomalies not anticipated in program
	D. Software development

EXAMPLES:
- o Experimental/Laboratory Models
- o Automated Machine Shop - Proposed National Bureau of Standards Prototype

12. AUTOMATED ASSEMBLY WITH ARTIFICIAL INTELLIGENCE

STRENGTHS	RISKS
A. Decision maker at work site	A. Hardware/software failure
B. No human risk	B. High cost of R&D
C. Extended operational time	C. Delay in data relay due to transmission distances
D. Large mass capability	D. We might find out that"we" are not indispensable
E. Small logistics support requirement	

EXAMPLES:
- o Experimental/Laboratory Models

2.0 DATA BASE DESCRIPTION

Four data bases are presented in this section to provide information on the costs, capabilities, support requirements, and timelines for specific assembly modes and for the basic STS delivery system. The data are current at the time of publication, but the user should augment any of the data bases with updated information or with data unique to his or her particular LSS concept or with unique STS utilization requirements. In addition, if there is significant information which, as a user, you feel would be useful to other analysts and designers, you are encouraged to submit the data to EL15, George C. Marshall Space Flight Center, Marshall Space Flight Center, Alabama.

For planning purposes, the cost data are presented in FY 1985 dollars. Conversions to FY85$ have been made in accordance with the Escalation Indices for Space System Development, developed in 1980 by the NASA Comptroller. A portion of the cost matrix is presented in Figure 2-1 for use with user-supplied cost data.

TO FY: ⇨

FROM FY: ⇩

	75	76	77	78	79	80	81	82	83	84	85	86	87	88
75	1.000	1.090	1.207	1.301	1.426	1.590	1.785	1.982	2.172	2.367	2.580	2.812	3.066	3.338
76	.917	1.000	1.107	1.194	1.308	1.458	1.637	1.818	1.992	2.171	2.368	2.579	2.811	3.062
77	.828	.903	1.000	1.078	1.181	1.317	1.479	1.842	1.799	1.961	2.137	2.330	2.539	2.765
78	.768	.838	.920	1.000	1.096	1.222	1.372	1.523	1.669	1.819	1.983	2.161	2.356	2.565
79	.701	.765	.847	.913	1.000	1.115	1.252	1.390	1.523	1.660	1.810	1.973	2.150	2.341
80	.629	.636	.759	.818	.897	1.000	1.123	1.246	1.366	1.489	1.623	1.769	1.928	2.100
81	.550	.611	.676	.729	.799	.891	1.000	1.110	1.217	1.326	1.445	1.575	1.717	1.870
82	.505	.550	.609	.657	.719	.802	.901	1.000	1.096	1.194	1.302	1.419	1.547	1.684
83	.460	.502	.556	.599	.656	.732	.822	.913	1.000	1.090	1.188	1.295	1.412	1.537
84	.422	.461	.510	.550	.602	.672	.754	.836	.915	1.000	1.090	1.188	1.295	1.410
85	.388	.423	.468	.504	.553	.616	.692	.768	.842	.917	1.000	1.090	1.188	1.294
86	.356	.388	.429	.463	.507	.565	.635	.706	.772	.842	.917	1.000	1.090	1.187
87	.326	.356	.394	.425	.465	.519	.582	.647	.708	.772	.842	.917	1.000	1.089
88	.300	.327	.362	.390	.427	.476	.536	.594	.651	.709	.773	.842	.918	1.000

Figure 2-1: Escalation Indices by FY for Space System Development

2.1 DATA BASE A - MANUAL ASSEMBLY TECHNIQUES, EQUIPMENT AND TIMES FOR LARGE SPACE SYSTEMS

The validity of employing EVA in space operations has been demonstrated for lunar and orbital operations, and many missions' success can be attributed directly to the capabilities of humans to perform planned maintenance and contingency repairs in space. Used as a technique for LSS assembly, EVA can bring the unique combination of cognitive and manipulative skills of the human to a complex work site. While EVA can be extremely exhaustive on the astronaut and is fairly limited in duration, it is in some cases the technique of choice for performing difficult servicing and repair tasks.

Productivity of EVA can be increased by providing the astronaut with tools and support mechanisms which can, to some extent, compensate for the physical and temporal limits of EVA. For the purposes of defining primarily manual modes, this data base includes four levels of manual activity as described below.

Manual Assembly - situations in which an EVA astronaut goes about an assembly operation using only his or her own manipulative skills for translation, stationkeeping and worksite activity. Assembly aids are limited to a non-powered general tool kit, preinstalled hand rails and foot restraints for mobility and support.

This approach might be preferred for one time, complex assembly tasks of short duration and requiring small masses or critical tolerances. It is often preferred for off nominal and emergency situations.

Manual Assembly with Minor Tools and Aids - where the EVA astronaut(s) employs specialized manual or powered tools to assist in task accomplishments, but the primary means of getting to the task site and bringing the tools to the task site reside with the EVA crew member(s). Task management, tool application, mobility and other task functions are the responsibility of the human operator who is aided by tools to increase task productivity.

The use of specialized tool kits implies that the elements of the task are fairly well understood, at least well enough to have designed a special tool, and the use of power tools suggests that the task site is prepared and that the forces or torques imparted by a power tool are compatible with the task equipment.

This mode of assembly would be preferred in situations requiring precise tolerances of several assembly pieces, varied forces and torques being applied by power tools to different fixtures, manipulation in complex spaces, and conditions where the task site and task elements are not fully detailed prior to a mission, such as emergency operations or unexpected failure recovery.

Manual Assembly with Major Tools and Support Systems - bring together the power of mobility aids, holding or manipulating fixtures and the intellectual and manipulative skills of the human at the task site. The human now has major support from systems like the Remote Manipulator System (RMS) or the Manned Maneuvering Unit (MMU) to move large masses over longer ranges, but the advantage of having the task manager at the task site is retained, albeit with some increase in hazard due to the size and dynamics of the support systems.

This assembly mode would be preferred in cases where a significant mass had to be moved from the Orbiter bay to a nearby assembly location, or where an EVA astronaut had to make many movements during an assembly sequence. Figure 2-2 shows an assembly approach using the RMS and two astronauts in a cooperative operation to deploy a LSS module from a deployment frame.

Manual Assist of Machine Systems - in manual assembly modes there is a point at which the relative contributions made by the human and the machine toward the accomplishment of a task change, and even though the human is in control of the machine operations, it is evident that the human is carrying out tasks based on the machine's capability. A concept for assembling large space structures is shown in Figure 2-3 where a movable assembly jig has two workstations for EVA astronauts, but the movement of the workstations is controlled by an operator at the shuttle aft flight deck (AFD) and the operations of the humans are only to support the assembly and deployment of the LSS. Note that the operator is still at the task site, but rather than having the human using a tool, we now have a very large and productive machine "using" a human for dexterous assembly tasks.

The increase in productivity would, of course, have to justify the increase in costs for the assembly fixture and EVA support equipment.

Manual Assembly Crew Support Equipment

Whenever a proposal has been made to employ manual assembly modes in the erection of large space systems, the first consideration is the requirement for EVA crew support.

Crew Support Equipment

For the purpose of this document, crew support equipment is defined as all general purpose equipment, procedures or services required to support the crew members during the performance of the LSS assembly tasks. This includes tools, handrails, foot restraints, crew procedures, pressure suits, time on-orbit, consumables, etc. Equipment directly related to a specific LSS configuration such as alignment fixtures is not included. Equipment used by the crew but available as a standard shuttle service is identified, but costs are included in standard services and not further burdened against the mission.

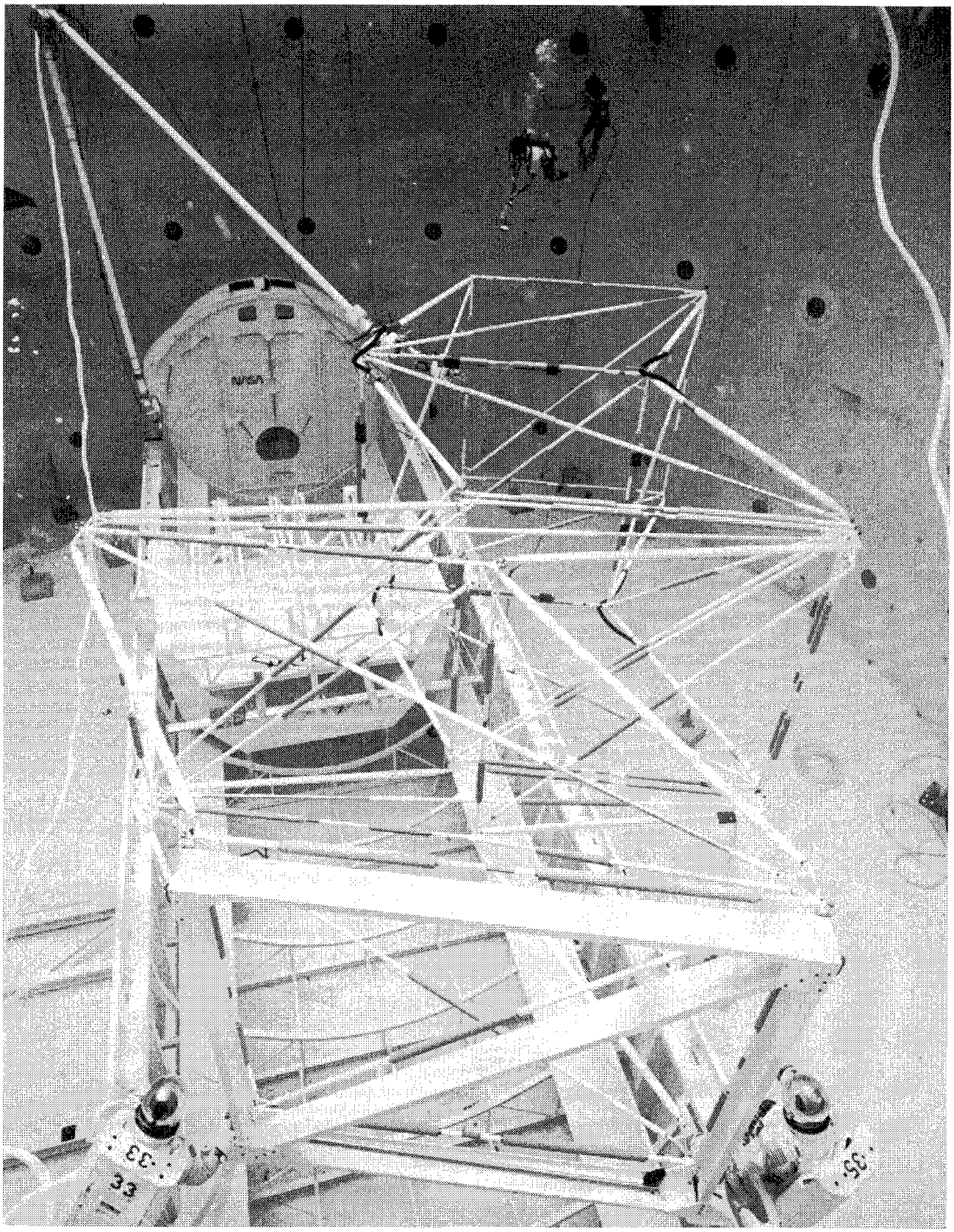

Figure 2-2: EVA and RMS Large Space Structure Deployment

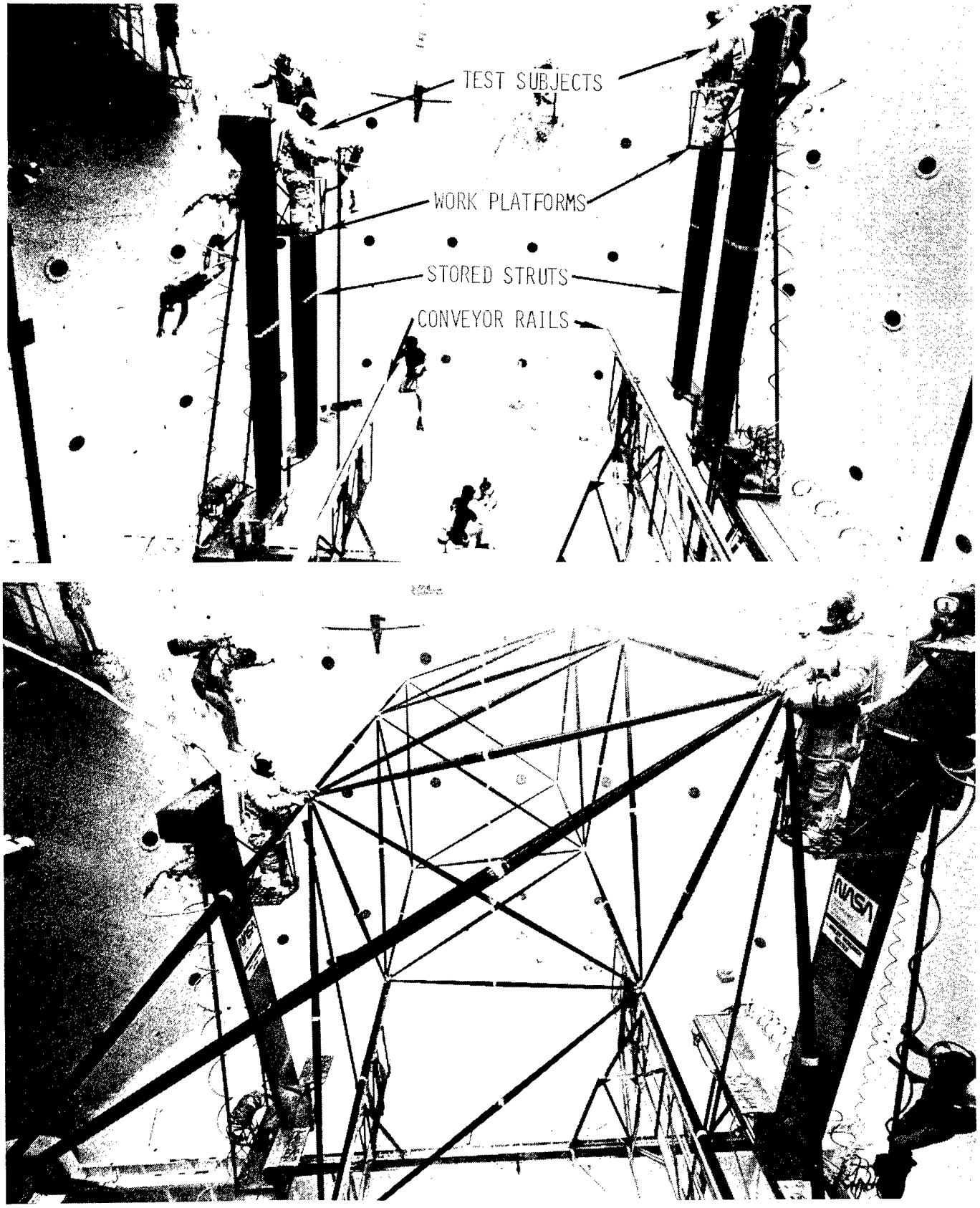

Figure 2-3: EVA Assist of Major Assembly Aid

Extravehicular Activity - Each shuttle flight is capable of supporting two 2-person EVA operations with up to 6 hours duration each. The $258,000 (FY85$) cost per EVA crew member for an EVA session also includes the use of:

- Extravehicular Mobility Unit (EMU pressure suit)
- Remote manipulator system to support EVA
- Standard support equipment such as tool kits, restraints and orbital bay lights
- Voice communications, video communication to the AFD
- MMU (1)
- Crew training (other than payload specific).

Extravehicular Mobility Unit and Related Services - The charges for the EMU pressure suit and related services such as stowage, resupply and servicing are included in the $154,800 to $258,000 per person, six-hour EVA. Additional charges may be required if more than two EVA's are required.

EVA Crew Aids - This category of crew support equipment contains all the mobility aids, crew restraints, tools and other aids required by an EVA crew member performing a typical EVA task. Payload specific crew aids are not included.

Handrails - EVA handrails are estimated to cost $5,160 per meter for design, fabrication, testing and installation on the STS or LSS equipment. Handholds will likely cost about $5,160 each (FY85$) for fabrication, testing and installation. Crew-installed portable foot restraints are estimated to cost $38,700 each. Available foot restraints may possibly be rented at a reduced rate.

Tethers - Tethers for EVA operations are estimated at $12,900 each (FY85$) although the cost will depend on length of tether and the type of tether hooks used.

Lights - Lights are available on the cargo bay interior to support EVA operations which are outlined in Table 2.1 and depicted in Figure 2.4. If additional lights are required, the estimated cost for each light is $25,800 (FY85$). Local lights are supplied on the EMU helmet for EVA work.

Cameras and Monitors - The cargo bay nominally contains a forward and aft camera and two monitors in the aft cabin. Additional cameras can be attached to the two bulkheads and along the cargo bay sill. The cost for an extra set of cameras and monitors is estimated at $516,000 (FY85$). The CCTV weights 7.3 kgs. The system consists of a camera, a power cable, the monitor, the monitor cable, the lenses (a 6-125 mm zoom and a 3 to 19 mm wide angle zoom) a camera bracket, a video interface unit, console monitors and a video tape recorder for the RMS camera. Images from ten cameras can be processed and then any two of these images can be monitored from the AFD. All ten can be downlinked to earth via S band. Locations for television mounts are shown in Figure 2-4.

TABLE 2-1. Orbiter Provided Lighting for Space Construction

(After Roebuck, 1980)

		DESCRIPTION			
Item	Qty	Watts (Each)	Lumens/ Watts	Type	Beam
Cargo Bay Floodlights in Side Walls	6	200	40 minimum	ARC Discharge (Metal halide)	135°cone or square
Docking Floodlight on 576 bulkhead, facing aft	1	200	40 minimum	ARC Discharge (Metal halide)	120° cone
Rendezvous/Docking Light, facing upward	1	130	12 minimum	Incand.	120° cone
RMS Wrist Light	1 (per arm)	150	12 minimum	Incand.	80°
EMU Mounted/Portable Light	1		(TBD)	Battery	(TBD)
Manned Remote Work Station Floodlights	3	60	(TBD)	Incand.	

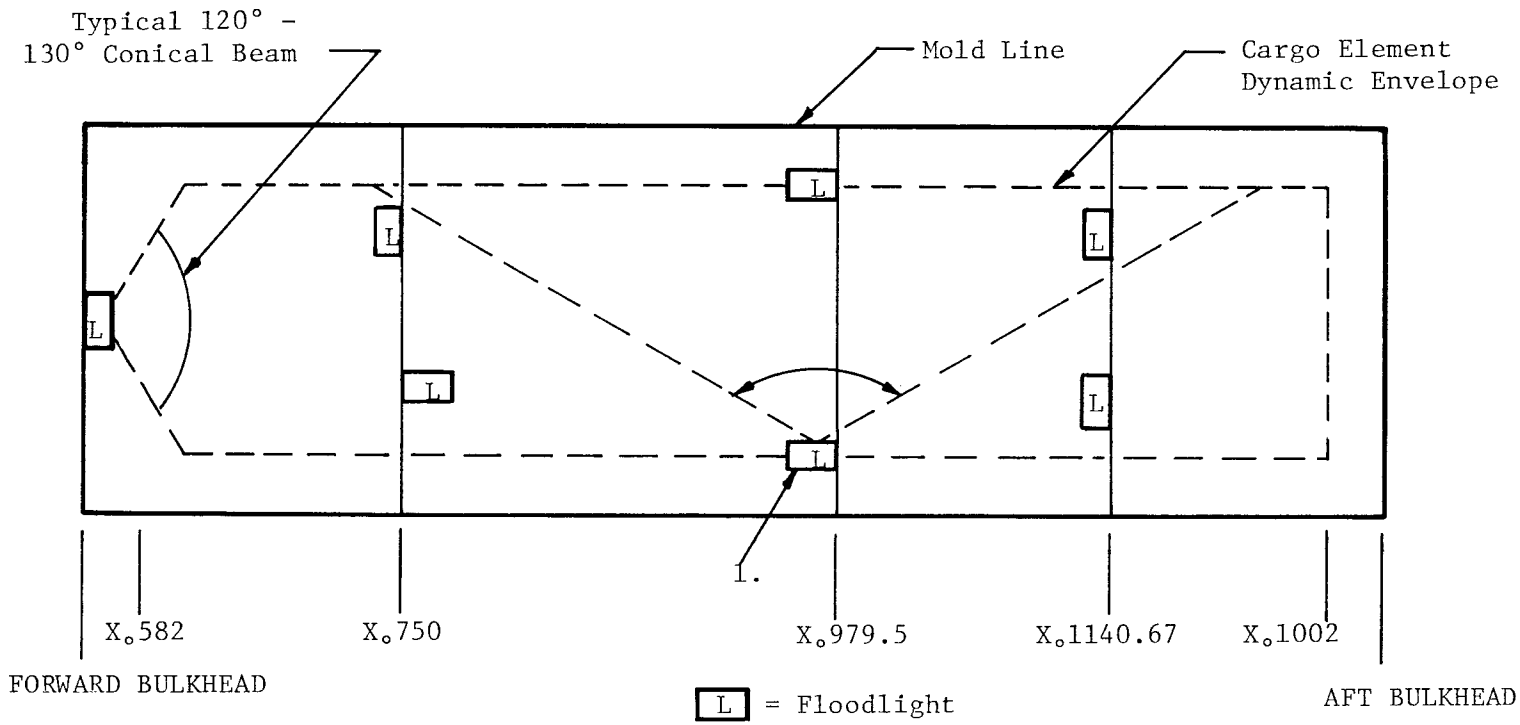

NOTES:

1. Six lights mounted outside cargo element dynamic envelope 120 degrees minimum conical beam

Figure 2-4. Standard Orbiter External Lighting Locations

Portable Workstation - A proposed baseline portable, crew-installed workstation with a foot restraint, handrails, lights and tools is estimated to cost $645,000 (FY85$). Assuming that this device is developed for flight use, this price will vary tremendously with the capability of the workstation and types of equipment needed.

RMS Mounted Foot Restraints - The RMS end effector can support foot restraint work platform. This will provide an operations station that can be moved throughout this RMS working envelope and take advantage of the EVA capability. The RMS foot restraints will cost an estimated $124,000 (FY85$).

Translation and Positioning Aids in the Orbital Bay - Two reel-type slidewires 14.5 m each run along the longerons, one on each side. A crew member can use these as a hand-over-hand translation aid or an "anchor" with an auxiliary tether. Hand holds and foot restraints are also installed at the forward aft bulkheads. These are provided as standard shuttle services. Access to any of these aids is not restricted by use of the Spacelab pallet.

Crew Tools - The cost for EVA tools will depend on their uniqueness, complexity, similarity to commercially available tools and modifications required for EVA use. The range of tool costs is from $5,000 for simple manual tools which are based on existing space qualified designs to over $2,500,000 (FY85$) for newly designed special purpose powered tools operated by the EVA crew.

A summary of crew support equipment is given in Table 2-2.

TABL. 2-2: Crew Support Equipment Cost Summary

CREW SUPPORT EQUIPMENT	COST (FY 85 $)
EVA Mobility Units and Resupply	$ 154,800 to $258,000 (FY 85$)
EVA Crew Aids	
o Handrails (per meter)	$ 5,160
o Foot Restraints	
- Permanent	$ 25,800
- Portable	$ 38,700
o Tethers - wrist, waist, reel-type	$ 12,900
o EVA Lights - fixed, portable	$ 25,800
o Cameras & Monitors - fixed, handheld	$ 516,000
o Portable Work Stations	$ 645,000
o RMS Mounted Foot Restraint	$ 124,000
EVA Tools	
o Manual	$ 5,160 to $ 25,800
o Powered	
- New design	$1,290,000 to $2,580,000
- Existing tool	$ 51,600
Time On-Orbit	$ 516,000 to $774,000/day
Assembly Procedures & Checklists	$ 5,200 to $ 38,700
Food and Other Consumables	Included in other charges
Communications Equipment	Included in other charges

Standard items which exceed the standard shuttle supply - more than two EMU's for instance - are chargeable to the user as part of the payload charge.

EVA Tasks and Performance Times

Aside from dollar costs, we can employ performance measures such as error rates, production rates, expended energy rates, etc., as indices with which to compare assembly modes. Simulations of LSS assembly tasks have led to the development of an EVA performance time list for several classes of tasks. The times given for each EVA task element are mean times from several dozen trials across several types of simulations. The data cannot be considered conclusive since the number of trials during task elements varied, there was a wide range of subject experience and skill levels, and the data collection was a secondary objective of a primary simulation. The data are fairly consistent, however, and represent a "best available" listing of EVA task times.

The performance times are presented in the following pages as Table 2-3 .

TABLE 2-3: EVA Performance Times by Task Element

EVA TASK ELEMENT		TIME HRS:MIN:SEC
1.0	REMOVE	
1.1	Equipment module from receptacle (1m x1m x.6m - push/pull, no latch)	00:00:21
1.2	Structural connector from stowage box	00:00:07
1.3	Structural connector from stowage post	00:00:10
1.4	Pin from post	00:00:05
1.5	Column from stowage rack	00:00:08
1.6	Waist tether from handrail	00:00:12
1.7	Wrist tether from union	00:00:15
1.8	Wrist tether from equipment module	00:00:13
1.9	Module from base plate pins - critical alignment (Figure 2-5)	00:00:15
1.10	3m cube deployable from holddown fixture	00:03:10
1.11	End cap from stowage	00:01:05
1.12	Small module from stowage	00:00:20

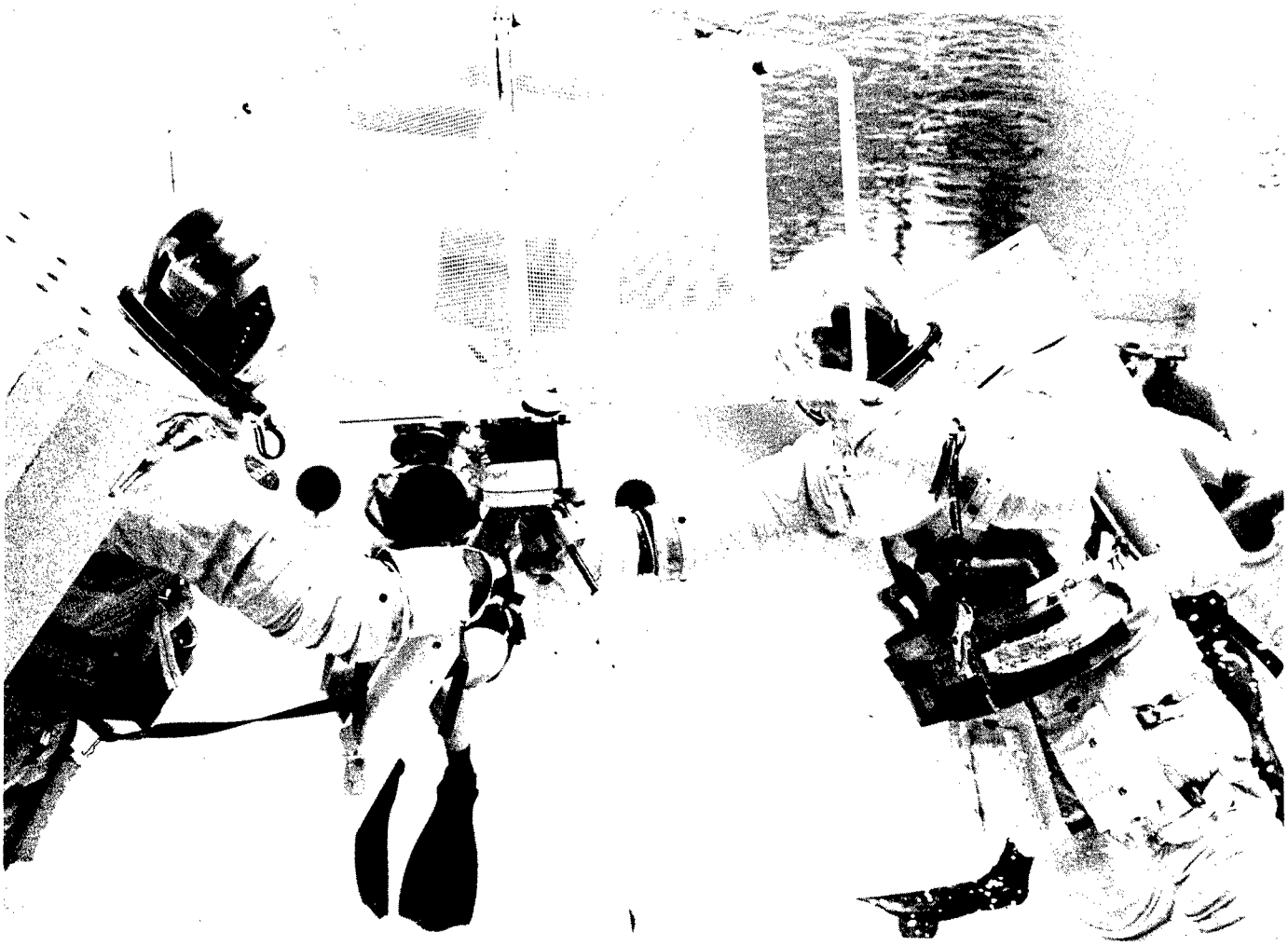

Figure 2-5: EVA Removal of an Equipment Module

EVA TASK ELEMENT	TIME HRS:MIN:SEC
2.0 TRANSLATE	
2.1 Along sill 10 ft.	00:00:24
2.2 Along sill 20 ft.	00:00:49
2.3 Over sill from outrigger	00:00:21
2.4 Over sill from cargo bay	00:00:11
2.5 Up assembly aid pole 15 ft.	00:00:22
2.6 Down assembly aid pole	00:00:22
2.7 Up assembly aid pole 15 ft. with equipment module (3'x3'x1-2')	00:00:44
2.8 20 ft. with columns using MMU	00:00:25
2.9 30 ft. with columns using MMU	00:00:35
2.10 20 ft. using MMU	00:00:20
2.11 30 ft. using MMU	00:00:30
2.12 Body 90°	00:00:10
2.13 Body 180°	00:00:20
2.14 10 ft. along straight handrail	00:00:12
2.15 10 ft. along curved handrail	00:00:15
2.16 10 ft. along column with column	00:00:20
2.17 10 ft. along column without column (Figure 2-6)	00:00:13
2.18 EVA translate from forward workstation to construction frame or frame to workstation (30 ft.)	00:00:59
2.19 EVA translate 3m of a cell of a module	00:00:20
2.20 EVA translate a module cell diagonal (10 ft.)	00:00:26
2.21 Translate 25 ft. w/MMU and install beam or column	00:01:10
2.22 Translate 50 ft. w/MMU and install beam or column	00:01:40
2.23 Translate 75 ft. w/MMU and install beam or column	00:02:01
2.24 Translate 100 ft. w/MMU and install beam or column	00:02:37
NBS-MMU TRANSLATION AND ROTATION TIMES FROM NBS DEMONSTRATIONS	
Average forward translation	1 fps
Average upward translation	1 fps
Average downward translation	1 fps
Average sideways translation	.58 fps
Average reverse translation	.36 fps
Average yaw	1.7 sec per 90°
Average roll	9.5 sec per 90°
3.0 POSITION BODY	
3.1 To ingress foot restraint	00:00:19
3.2 To ingress leg restraint	00:00:29
3.3 To attach waist restraint	00:00:23
3.4 To attach or verify union connection	00:00:22
3.5 To verify column connection	00:00:23
3.6 To receive union	00:00:08
3.7 To receive column in leg restraint	00:00:07
3.8 To receive column in foot restraint	00:00:05
3.9 To receive column w/o leg or foot restraint	00:00:17

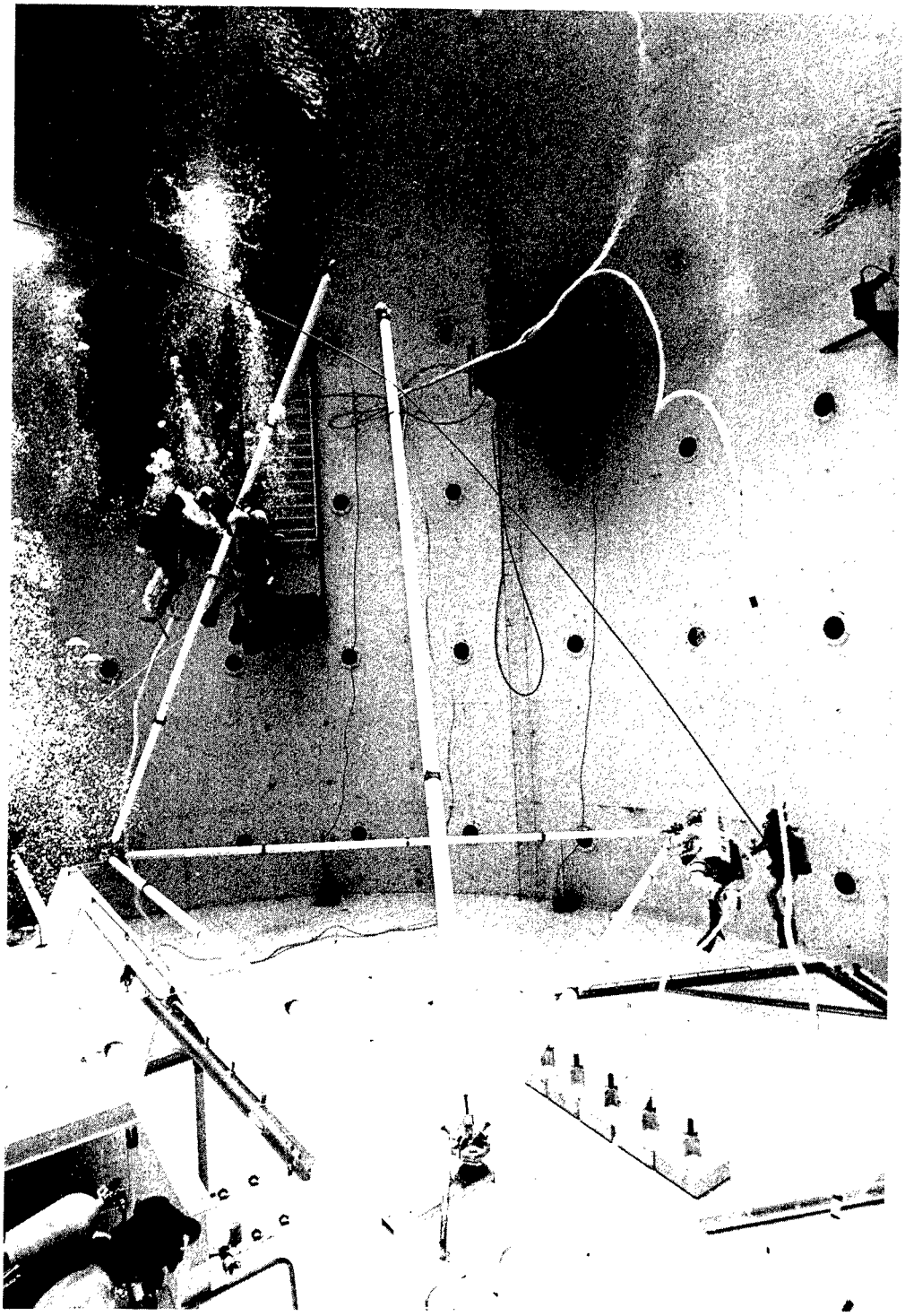

Figure 2-6: EVA Translation Along a Structure Column

	EVA TASK ELEMENT	TIME HRS:MIN:SEC
4.0	INGRESS	
4.1	Foot restraint using one handrail	00:00:21
4.2	Foot restraint using two handrails	00:00:13
4.3	Leg restraint using one handrail	00:00:37
4.4	Leg restraint using two handrails	00:00:35
5.0	EGRESS	
5.1	Foot restraint using one handrail	00:00:08
5.2	Foot restraint using two handrails	00:00:05
5.3	Leg restraint using one handrail	00:00:14
5.4	Leg restraint using two handrails	00:00:14
6.0	ATTACH	
6.1	Waist tether to handrail with foot restraint	00:00:16
6.2	Waist tether to handrail w/o foot restraint	00:00:20
6.3	Union to own wrist tether	00:00:17
6.4	Union to other crewman's wrist tether	00:00:12
6.5	Waist tether to Simulated Experiment Module	00:00:12
6.6	Module to clothesline hook	00:00:12
6.7	Wrist tether to clothesline module	00:00:15
7.0	TRANSFER	
7.1	Assembly aid to vertical position (1 or 2 crewmen)	00:00:33
7.2	Assembly aid to locked position (Figure 2-7)	00:00:26
7.3	18 ft. column 10° using foot restraint	00:00:12
7.4	18 ft. column 60° using foot restraint	00:00:49
7.5	18 ft. column 60° using no foot restraint	00:00:43
7.6	30 ft. column 10° using foot restraint	00:00:24
7.7	30 ft. column 60° using foot restraint	00:00:96
7.8	30 ft. column 60° using no foot restraint	00:01:49
7.9	Module on clothesline 20 ft.	00:00:35
7.10	10 ft. column 90° without foot restraints	00:00:14
7.11	10 ft. column 90° without foot restraints	00:00:22
7.12	10 ft. column 10 ft. with foot restraints	00:00:13
7.13	10 ft. column 10 ft. without foot restraints	00:00:22
7.14	3m cube from holddown fixture to deployment frame with RMS (Figure 2-8)	00:03:40

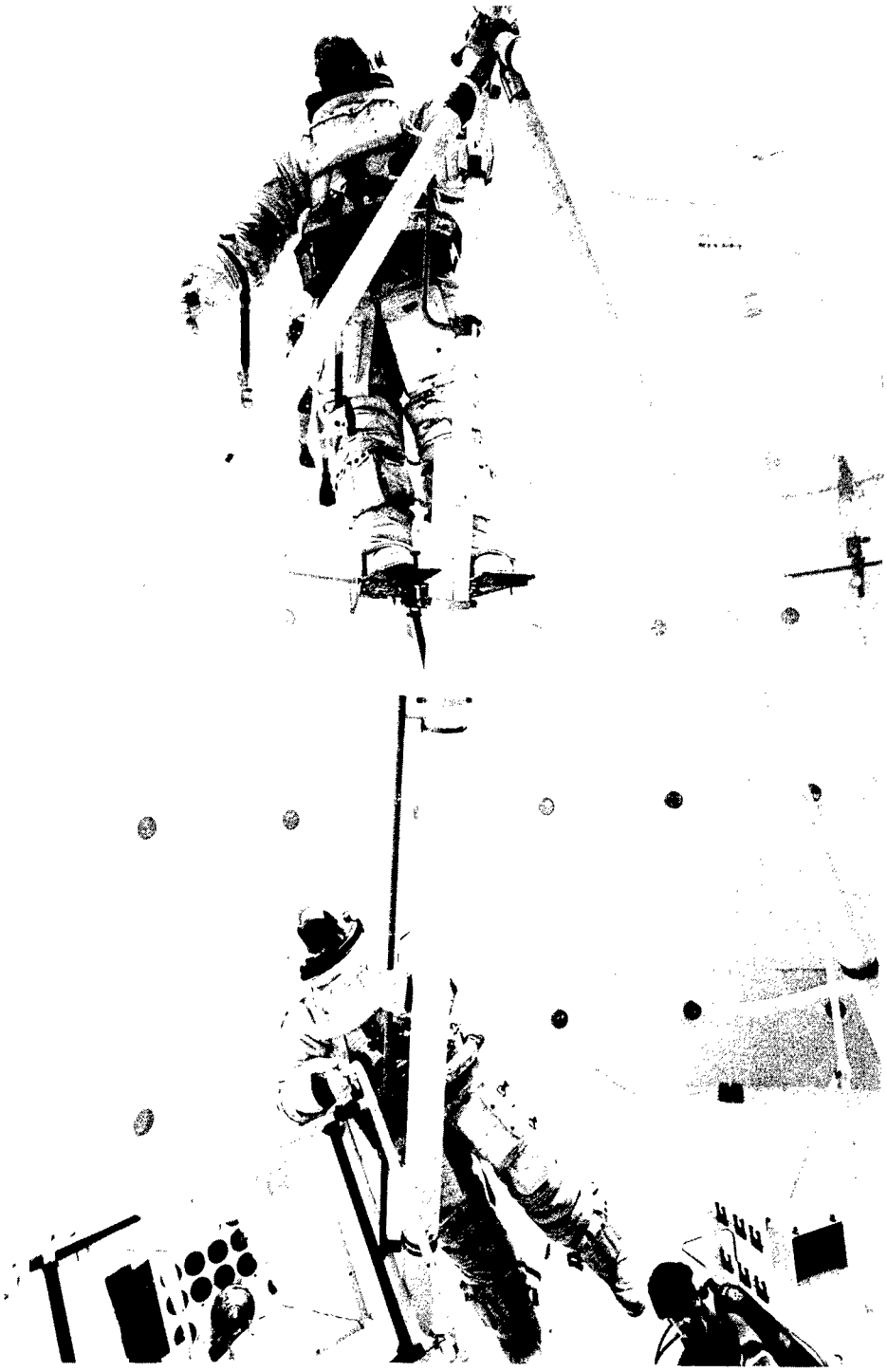

Figure 2-7: EVA Assembly Aid Being Locked into Position

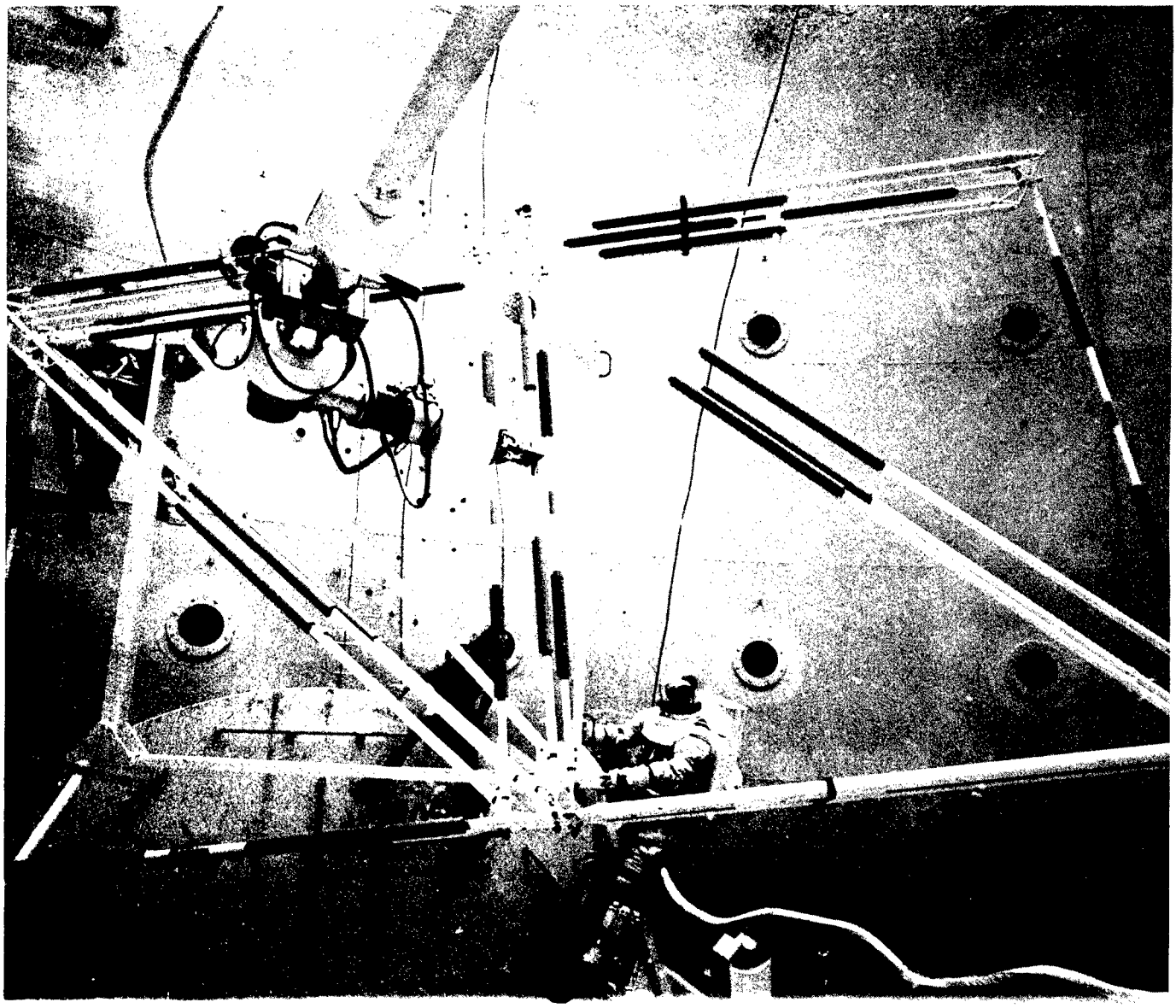

Figure 2-8: Transfer 3m Cube with RMS to EVA Crew

EVA TASK ELEMENT	TIME HRS:MIN:SEC
8.0 MATE	
8.1 Assembly aid clamp to pole	00:00:56
8.2 Union to pedestal - critical alignment	00:00:28
8.3 Column to union - critical alignment	00:00:31
8.4 Equipment module to union - critical alignment	00:01:35
8.5 Union to column - medium alignment	00:00:17
8.6 Column to cluster - medium alignment	
o with foot restraints	00:00:12
o without foot restraints	00:00:43
8.7 Union to pedestal - coarse alignment	00:00:23
8.8 Column to union - coarse alignment	00:00:09
8.9 Equipment module to union - coarse alignment	00:00:34
8.10 Union to assembly pole clamp	00:00:55
8.11 Union to column - coarse alignment	00:00:09
8.12 Tighten ball joint jam nut	00:00:12
8.13 Module to base plate pins - coarse alignment	00:01:30
8.14 3m cube to deployment frame	00:01:45
8.15 3m cube to deployable card table interconnect	00:03:00
8.16 Orthogonal beams (2) with lap joint union	00:07:10
8.17 Beams with shuttle sill latches	00:02:10
8.18 RMS/EVA orient a $3m^3$ module for lock on/mate	00:02:04
8.19 EVA lock on a 3m module with 4 drogues	00:02:00
8.20 EVA collapse a $3m^3$ cell for stowage	00:01:27
8.21 EVA demate $3m^3$ cell from a cell or deployment frame	00:01:27
9.0 VERIFY	
9.1 Assembly aid pole clamp secure	00:00:30
9.2 Assembly aid union clamp secure	00:00:35
9.3 Union mated to pedestal - critical alignment	00:00:20
9.4 Column mated to union - critical alignment	00:00:36
9.5 Union mated to pedestal - gross alignment	00:00:10
9.6 Column mated to union - gross alignment	00:00:15
10.0 HAND TOOL USE	
10.1 Grasp tool	00:00:17
10.2 Position ratchet on bolt	00:00:09
10.3 30° ratchet stroke*	00:00:03
10.4 45° ratchet stroke*	00:00:04
10.5 90° ratchet stroke*	00:00:06
10.6 180° ratchet stroke*	00:00:10
10.7 Release bolt clip	00:00:20
10.8 Engage bolt clip	00:00:25
10.9 Translate 2' between bolts	00:00:10

*Less than 5 ft-lbs torque

EVA TASK ELEMENT	TIME HRS:MIN:SEC
11.0 DEPLOY	*
11.1 Deploy 1 single fold module, 1 EVA w/RMS, from frame ($3m^3$)	00:23:48
11.2 Deploy 2 single fold modules, 1 EVA w/RMS, from frame ($3m^3$ each) Figure 2-9	00:31:16
11.3 Deploy 1 double fold module, 1 EVA w/RMS, from frame ($3m^3$)	00:42:12
11.4 Deploy 2 single fold modules, 2 EVA w/RMS, from frame ($3m^3$ each)	00:45:29
11.5 Deploy 1 double fold module, 2 EVA w/RMS, from frame ($3m^3$)	00:49:50
11.6 Deploy 2 single fold modules, 1 EVA w/RMS, from bay ($3m^3$ each)	00:29:29
11.7 Deploy 2 single fold modules, 2 EVA w/RMS, from bay ($3m^3$ each)	00:33:17
11.8 Deploy 2 double fold modules, 2 EVA w/RMS, from bay ($3m^3$ each) (Figure 2-9)	00:52:35
11.9 Deploy 2 double fold modules, 1 from bay, 1 from frame, 2 EVA w/RMS ($3m^3$ each)	00:47:40
11.10 Deploy 2 single fold modules, 1 from bay, 1 from frame, with interconnect, 2 EVA w/RMS ($3m^3$ each)	00:38:50

*Deployment time includes module unstow, transport, attachment to deployment frame and deployment.

12.0 RETRACT	*
12.1 Retract 2 single fold modules, 1 EVA w/RMS, from frame	00:38:13
12.2 Retract 2 single fold modules, 2 EVA w/RMS, from frame	00:23:51
12.3 Retract 2 double fold modules, 1 EVA w/RMS, from frame	00:34:39
12.4 Retract 2 double fold modules, 2 EVA w/RMS, from frame	00:35:00
12.5 Retract 2 single fold w/interconnect, 2 EVA w/RMS	00:37:33

*Note: Retract time includes module unlock, fold against deployment frame, demate from frame and transport to stowage rack at midbay.

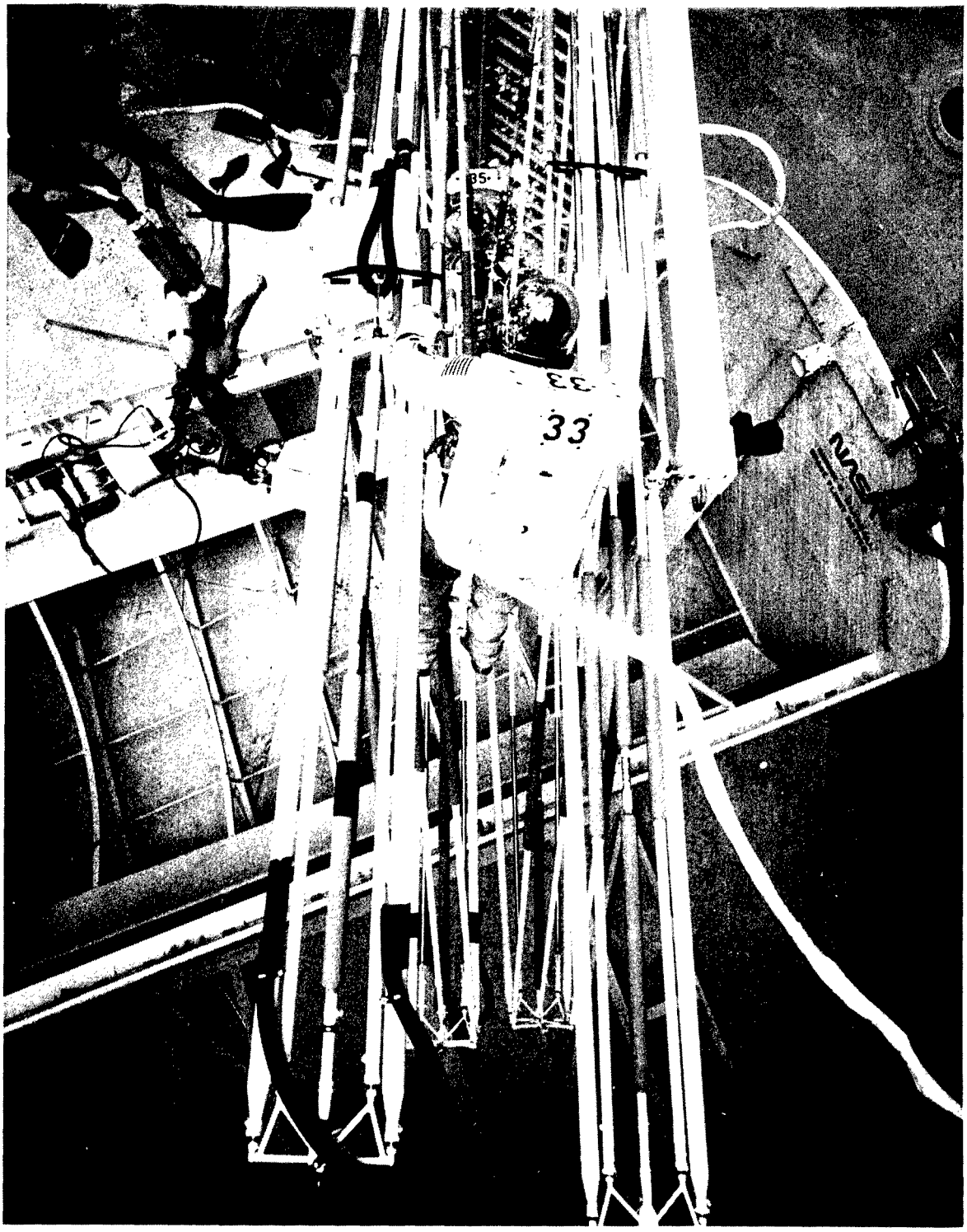

Figure 2-9: EVA Assisted by RMS in Deploying Two Modules from Frame

2.2 DATA BASE B - REMOTELY CONTROLLED ASSEMBLY TECHNIQUES FOR LARGE SPACE SYSTEMS

Remote systems for LSS assembly, as used in this document, include systems for fabrication, manipulation, assembly or mobility of structures. These systems are physically independent of the control site but are under the operational control or immediate supervisory control of the flight or ground crew. As in the case of other LSS assembly modes, there is a developmental line within remote assembly mode which bridges the region between manual modes and automated modes of structures assembly.

When we consider remote systems we are including each of the following types of systems:

- o Remote, with proximate control (e.g., from AFD)
- o Remote, with distant control (e.g., through TDRSS)
- o Remote, with preprogrammed subroutines (e.g., object approach and avoidance routines)
- o Remote, with computer management and operator supervision (e.g., transmission delay due to larger distances).

These categories would encompass the shuttle RMS operation, teleoperator maneuvering system (TMS), remote satellite servicers, and operator supervised deep space or planetary based assemblers. The advantages inherent in remote operations are freedom from human life support systems which are expensive and short lived, the ability to perform assembly or servicing at some distance from the shuttle, the capability to simultaneously employ several distinctly different assembly systems at the same rate, and the capability to perform supervised assembly at great distances from the operator's station or in "blind" spots in the communication link.

Regardless of the degree of remote operation autonomy, it is useful for the analyst to consider the following generic tasks and the operational parameters usually associated with remote manipulation. Generally, at least two of the three parameters should be defined before making cost or productivity estimates or assumptions. If the information is not available, the analyst should take this as an indication of the reliability of any subsequent estimate, i.e., the less that is known about the system, the less reliable will be the assembly estimates.

Some considerations to be taken up when evaluating remote operations, particularly remote manipulation, are shown in the following list. The type of tasks being performed will generally drive the manipulator requirements, and consequently the costs associated with the overall remote approach.

REMOTE MANIPULATOR OPERATIONAL CONSIDERATIONS AND PARAMETERS

GENERIC TASK	MANIPULATOR CONFIGURATION	MANIPULATOR ACTUATION	WORKING END EFFECTOR
Positioning	Variable within reach envelope	Gross manual	Tip position vs. joint control
Orienting	Variable within working envelope	Fine manual	Tip control vs. joint control
Align axes	Control law dependent	Fine manual vs. programmed	Tip control vs. joint control
Track attach point	Control law dependent	Automatic vs. manual	Target dependent
Avoid obstacles	Determined by working envelope	Automatic vs. manual	Tip control vs. joint control
Grapple attach point	Variable within working envelope	Automatic vs. manual	Close and apply forces
Despin	Mass and control law dependent	Automatic program control	Increase force application
Stabilize	Mass and control law dependent	Fine manual	Gripping/ torque sensing
Configure for fine manipulation	Variable within working envelope	Fine manual	Proximity sense
Configure for return	Variable within working envelope	Gross manual	Gripping/ force sensing
Remove module cover	Bilateral Operations	Fine manual	Grasp, wrist roll
Stow cover	Variable within working envelope	Pick and place	Grasp, orient, transfer
Align with module	Variable within reach envelope	Fine manual translation	Orient, open
Grasp module	Fixed	Automation command	Close

GENERIC TASK	MANIPULATOR CONFIGURATION	MANIPULATOR ACTUATION	WORKING END EFFECTOR
Unlock module	Bilateral - 2nd arm	Fine manual	Dexterous manipulation
Break connections	Bilateral - 2nd arm	Force/torque application	Dexterous manipulation, force sensing
Free module	Limited by module	Force and translation	Gripping, force sensing
Retract module	Limited by module	Translation	Gripping
Stow module	Variable within working envelope	Pick and place	Grasp, orient, transfer
Align module	Variable within working envelop	Fine manual translation	Gripping
Insert module	Limited by module	Force/torque application	Gripping, force sensing
Mate connections	Limited by connectors	Force/torque application	Dexterous manipulation, force sensing
Lock module	Bilateral - 2nd arm	Force/torque application	Dexterous manipulation, force sensing
Install module cover	Bilateral operations	Fine manual	Grasp, align, wrist roll

Remote assembly with proximate control is an assembly approach which involves the co-location of the human operator and the remote assembly machine. The Shuttle RMS (SRMS) is a good example of this concept; the operator is located at the aft flight deck and has a direct view of the shuttle arm as it is commanded through task sequences. Operations are conducted in real time, the aid of a major machine system permits large masses to be moved and controlled, the operator is permitted to work in a shirt-sleeved environment, and several shifts of operators can be scheduled for extended operational sequences. The reduction in human workload and the increase in available assembly time will generally more than compensate for the increase in the time to perform a given task sequence using remote systems. This mode of assembly is performed for missions where large masses are to be moved or positioned, and the overall space structure configuration does not interfere with the shuttle configuration. In assembly operations that do result in a structure which would interfere with the shuttle, it is desirable to employ a remote system in proximity to the shuttle such as a teleoperator. This approach still provides direct feedback of assembly operations but permits more latitude in assembly operations. Having moved slightly away from the shuttle, we now have transport time from the shuttle to the structure that reduces the overall time engaged in actual production. Proximate teleoperator control in the immediate shuttle area is probably more efficient for servicing structures or for moving assembled structural components from the shuttle to a construction site.

Remote assembly with distant control provides an assembly approach wherein the remote system is located out of direct viewing of the operator or at great distance or a short time delay from the operator. The most often cited advantage for distant control is that it does not rely on the Shuttle crew for operations management. The Shuttle moves into orbit, discharges the structures payload and remote assembler, and then the assembly operations are controlled from a ground station, most probably through TDRSS. This permits a dedicated assembly crew, working through a command link, to perform assembly operations via a distant teleoperator. The shuttle and its crew are free to carry out other parts of their mission which can result in significant savings on structures assembly. Also if required, multiple shifts of operators can be scheduled for controlling the assembly around-the-clock in a normal earth-based environment. We will realize an increase in the daily level of assembly and a decrease in the labor overhead, but distant control has some critical limitations. The first severe limit is the command and feedback time delay inherent in the control of distant remote systems. Without adequately compensating for this delay, the operator/machine performance level can degrade very quickly. Additionally, the removal of the active operator from the task site means that direct viewing is out of the question, so the operator's understanding of the task environment is limited to that information which is gained by remotely located sensors. The fact that the assembly system and its supplies are located away from any emergency or contingency "help" means that considerable reliability must be built into the system. This additional cost must be considered when evaluating this assembly approach.

Space structure assembly involving distant control of a remote assembler is the preferred mode for situations where there is known high reliability of the remote assembler components and known high reliability of the command and control link. It is an approach which is best suited for long duration assembly operations -- those which exceed the on-orbit time of the Shuttle -- and can be carried out without complex interactions between the operator's ability to compensate for time delays and limited sensory feedback.

Remote assembly with preprogrammed subroutines is an alternative which can compensate for some of the problems found in distant control of remote assembly systems. In this particular evolutionary stage, the primary decision maker is still the human operator, and his tool for assembly is still a distant machine system. But we can provide the machine with on-board cyclical logic and feedback so that simple and repetitive machine operations can be carried out without step-by-step human command. By integrating computerized commands for specific task sequences in the assembler, the human is now free to initiate those sequences when the conditions are suitable for the execution of that routine. This approach relieves the human of the task of constantly commanding the assembly progress while retaining the decision making authority.

The system now has become slightly more autonomous and as a result, assurance of high reliability must be designed into the hardware and software of the assembler. This will increase the system costs which can be traded against increases in assembly productivity and decreases in human labor.

Remote assembly with computerized management and operator supervision is a direct next step in the automation of space structures assembly. It is an extension of preprogrammed subroutine assembly, but now a complete assembly sequence can be carried out with the human performing in a supervisory capacity. The operator can make adjustments to the system, interview in off-nominal conditions, review progress and perform status monitoring. This represents a significant reduction in human workload and labor hours required and a considerable advance in the state of space application of software managed machine systems. With the computerized management of assembly tasks, other advantages accrue such as being able to continue operations in portions of the orbit that are shadowed from radio communication or having several remote assemblers working for one human supervisor.

The introduction of remote assemblers into space has been made with the inaugural flight of the SRMS, and planners of future space structures missions will be able to base assembly scenarios on data derived from the performance of the SRMS.

Remote System Concepts

Several concepts for remote management of large space systems assembly have been proposed with some fundamental studies having been completed. These are presented below and represent a sample of specific remote systems concepts being considered.

Teleoperator - The teleoperator system envisioned for LSS activities is derived from the Teleoperator Retrieval System (TRS) which was being developed for reboost/deorbit of Skylab, which in turn was based on study findings from the MSFC Teleoperator Technology Development Program.

The basic teleoperator is a mobility module which incorporates sensory and manipulative subsystems for the purpose of extending the human operator's skills and cognitive capabilities into hostile or remote environments. The teleoperator system encompasses all major RMS subsystems.

Initial development costs of the TRS were computed to be $68 million (FY85$) with a production flight version costing an estimated $65 million (FY85$). These cost figures represent the necessary subsystems such as the control/display station, communications, mobility, manipulation and docking, and also reflect an accelerated development and production effort. It is possible, therefore, that other teleoperator concepts such as the Teleoperator Maneuvering System (TMS) will cost less. Estimated production costs for a basic TMS are given as $48 million (FY85$). In addition to the basic TMS, costs for development, qualification and testing and the first production unit of a bilateral TMS manipulator system are estimated to be $23 million (FY85$). This type of system would be preferred for dexterous manipulation during "two handed" tasks. The projected user fee for the proposed TMS is $3 million (FY85$). Figure 2-10 shows one concept for a TMS being proposed for Shuttle missions.

Remote Construction Module and Large Construction Manipulator - This concept provides for an operations cab attached to a beam structure which is mated to an interface on a large space structure. The large manipulator is connected to the operations cab and can be operated by an EVA crew member from inside the cab or remotely from a remote operations station. The cab has at least 360° rotation about its attachment to the beam and can translate along the beam. The beam has up to 180° (±90°) rotation about its point of attachment to the large space structure. The manipulator arm has shoulder, elbow, wrist and end effector movement; however, engineering design criteria are dictated by specific applications.

Remote Structure Fabricator - For LSS assembly beyond the orbit capabilities of the Shuttle, a structure fabricator could be placed in high earth orbit to convert raw material into beams or other structural elements. This concept is similar to the shuttle-attached automated beam builder (ABB) developed for MSFC by Grumman, but its operations are controlled from a remote operations station.

The remote fabricator could be resupplied on-orbit by a teleoperator, or it could rendezvous with the Shuttle for resupply. Major operational control of the remote structure fabricator would be accomplished with preprogrammed subroutines since it is assumed that the final LSS design is thoroughly known prior to construction. Operator control could be exercised at specified points along the assembly timeline, while operator supervision of the fabricator would be full time.

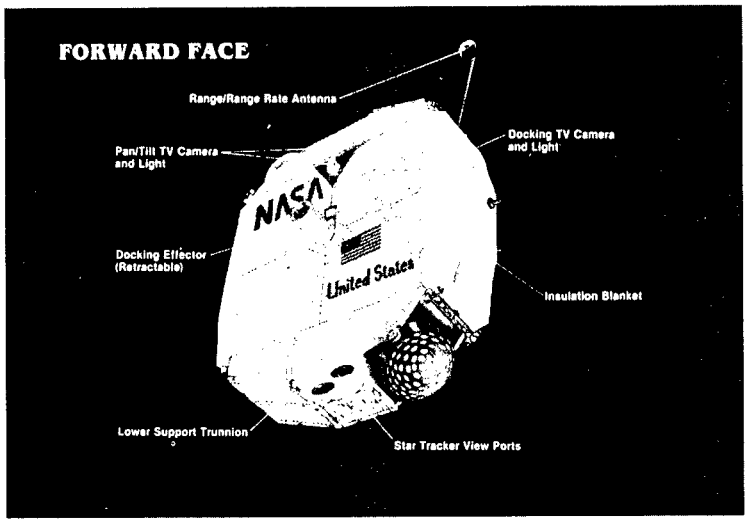

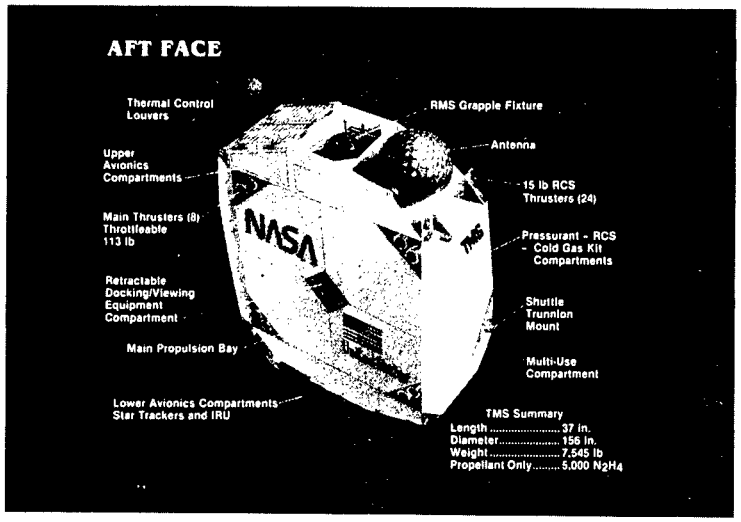

Figure 2-10: Maneuvering System Teleoperator, Basic Configuration

For structures that will be used in orbits beyond the current STS capability (altitude or inclination angle), remote devices such as the teleoperator should be considered in lieu of Shuttle OMS kits or special propulsion systems such as the Solar Electric Propulsion Stage (SEPS).

Principal Remote Subsystems

Propulsion Subsystem - Propulsion will provide mobility from the launch vehicle to a work site, including the transport of equipment and materials from the Shuttle to a large space structure assembly area.

Communications Subsystem - Communications are required for guidance and control of the remote system and relay of data back to the control station, including control of vehicle and manipulation subsystems during space structure assembly. Communications and data systems demands fluctuate with the needs of payload specific operations on any given mission. The standard orbiter systems are as follows: a radio-frequency system, a general-purpose computer, processing links between payloads and radio frequency systems, television and tape recording systems. The processors or payload signal processors are important for assembly as they handle data from newly deployed payloads, which then downlink to a ground base. Free-flying payloads link directly with ground base. From the AFD, crew can power up, checkout control one payload at a time through the radio frequency (RF) link, or up to five payloads through umbilicals to the cargo bay.

Sensor Subsystem - Sensors will provide visual and infravisual scene feedback to the control station. This may include a television view of the task site, range and range rate information for mobility control, force feedback data for manipulator control and similar transformation of environmental data into operator control information.

Cost estimates for flight qualified video components and visual systems can be derived from current and proposed programs. The data from the teleoperator retrieval system and the space transportation system (STS) indicate the following visual system costs can be used in computing remote system costs.

SENSOR/VISUAL SYSTEM	COST (FY85$)
Visual Sensor/TV Camera System	$ 645,000 - $ 774,000
Modified Graphics Display with Visual Scene Information	$1,032,000 - $1,290,000
Visual Display (CRT)	$ 77,900 - $ 129,000
Multi-Camera Multi-Display Systems with Switching, Remote Camera Control and Lighting Subsystem	$20,640,000
Dual CRT Display with Command Keyboard	$1,548,000 - $1,935,000
Continuous Wave Frequency Modulated Ranging Radars	$ 5,160,000
Ku Band Rendezvous Radar	$20,640,000 - $25,800,000

Manipulator Subsystem - Manipulators will be employed for handling large space system components such as beams and joints. This will include securing components for transportation to the task site, dexterous manipulation at the work site, and support of assembly operations. Manipulator subsystems can be highly specialized or general purpose, depending upon applications.

Manipulator subsystems and their widely varying characteristics and applications are very difficult to cost estimate, but several well known systems such as the Protoflight Manipulator System (PFMA) and the Shuttle Remote Manipulator System (SRMS) can provide some insights into subsystem costs.

MANIPULATOR SYSTEM	COST (FY85$)
Long Member (20 m) - Articulated with General Purpose End Effector	$9,907,200
Medium Member (5 m) - Articulated with General Purpose End Effector	$1,290,000 - $2,580,000
Short Member (1 m) - Bilateral System with General Purpose End Effector	$2,068,000 - $5,160,000
Special Purpose End Effector	Application-Specific

Remote Manipulator Spacecraft System - Early proposals by General Electric for a free-flying manipulating spacecraft provide some insight into costs associated with free-flying teleoperators. The teleoperator proposed was primarily dedicated to manipulative tasks as can be seen in Figures 2-11 and 2-12. The cost of system research and development is given as $65,267,400 (FY 85$), with the first flight unit costing $15,579,000 (FY 85$). The isometric, bilateral manipulator arms depicted at the top of the spacecraft will cost $9,420,000 to develop and space qualify for the first flight unit.

Additional Shuttle Remote Manipulator System - The standard SRMS costs are included in the optional or bidder services costs.

A kit providing a second SRMS arm can be located on the starboard side of the cargo bay opposite the baseline SRMS. The cost for using this arm is $278,898 (FY85$). A maximum additional charge for installing and removing the arm is set at $2,554,200 (FY85$) although this fee may be reduced by the terms of the launch agreement. The SRMS features are portrayed in Figures 2-13, 2-14 and 2-15.

The SRMS as a payload standard service is mounted at X_o 679.5 on the port side. The reach from the shoulder is 50 feet and six degrees of manipulator freedom are provided through joints at the shoulder,

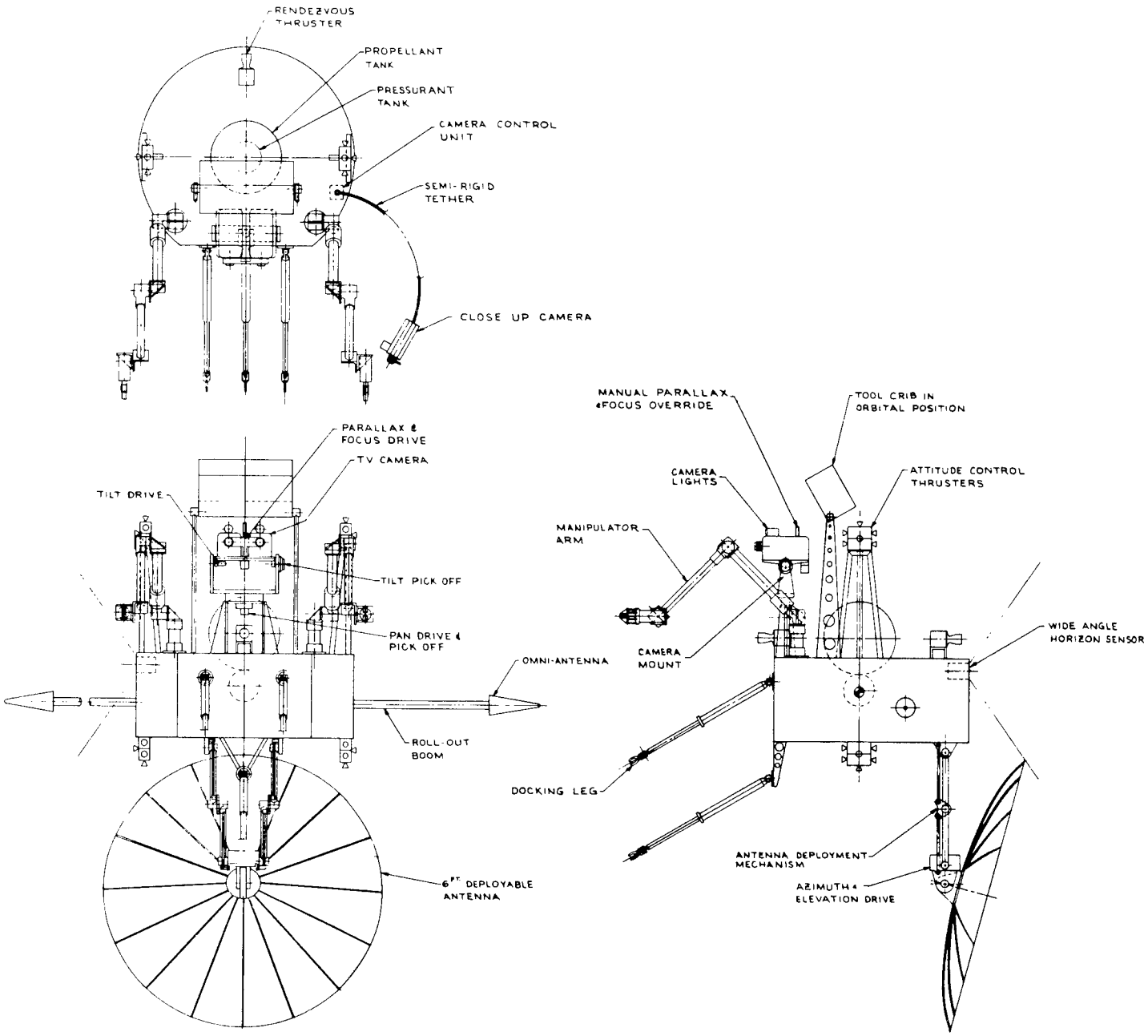

Figure 2-11: Multi-Armed Teleoperated Servicing Spacecraft

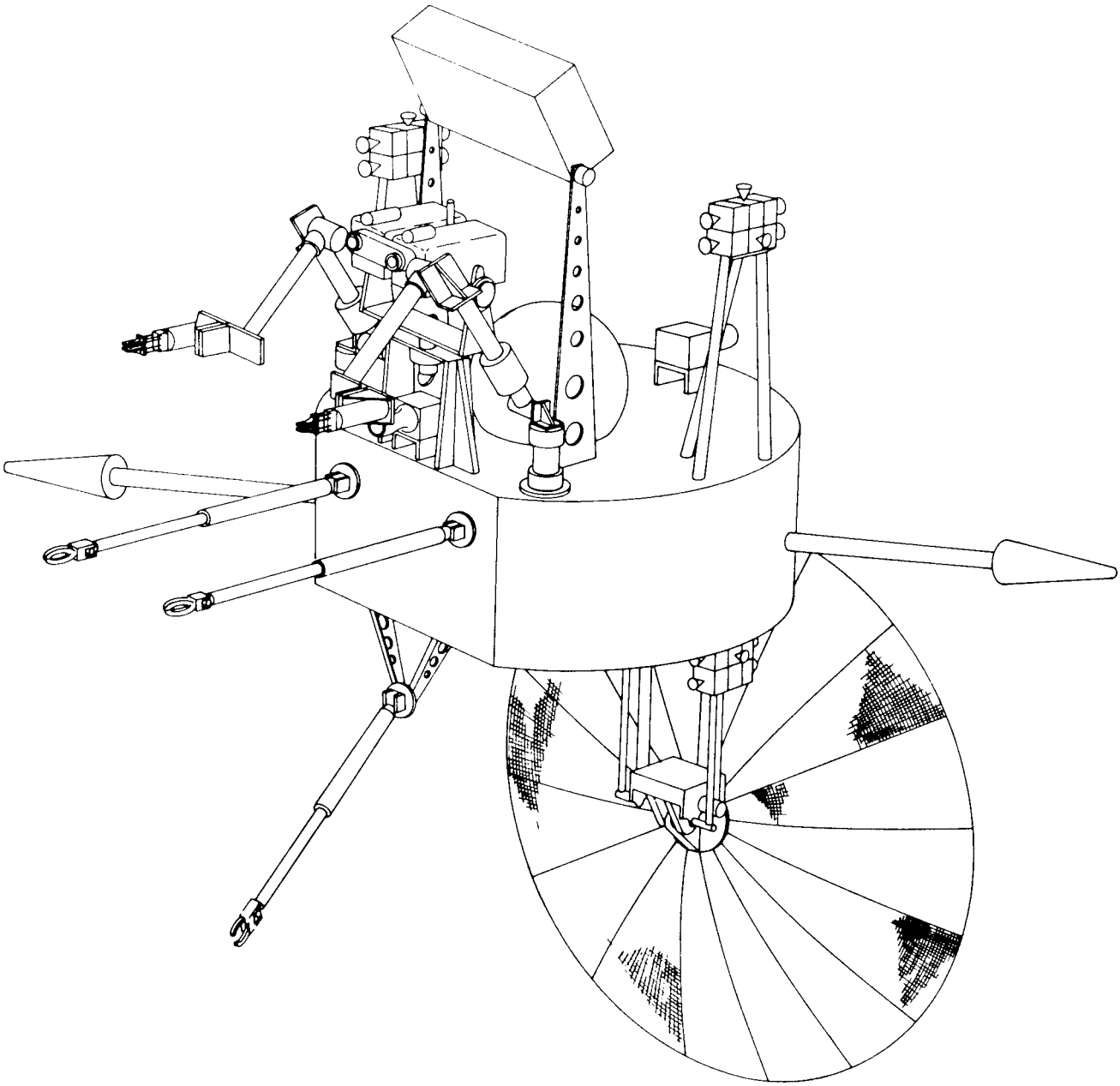

Figure 2-12: Artist's Concept of Early Teleoperator Manipulator Spacecraft

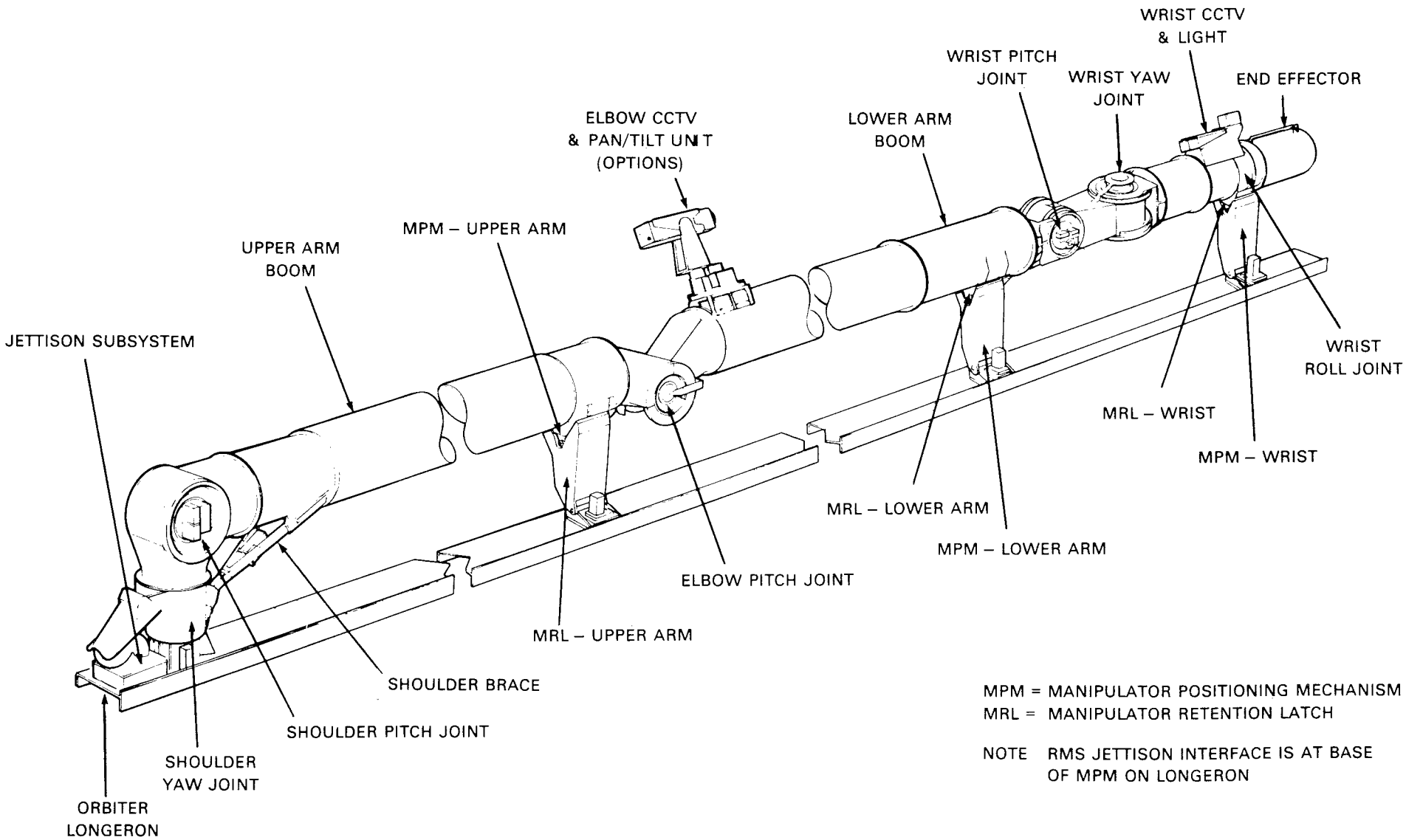

Figure 2-13: SRMS Mechanical Arm General Arrangement

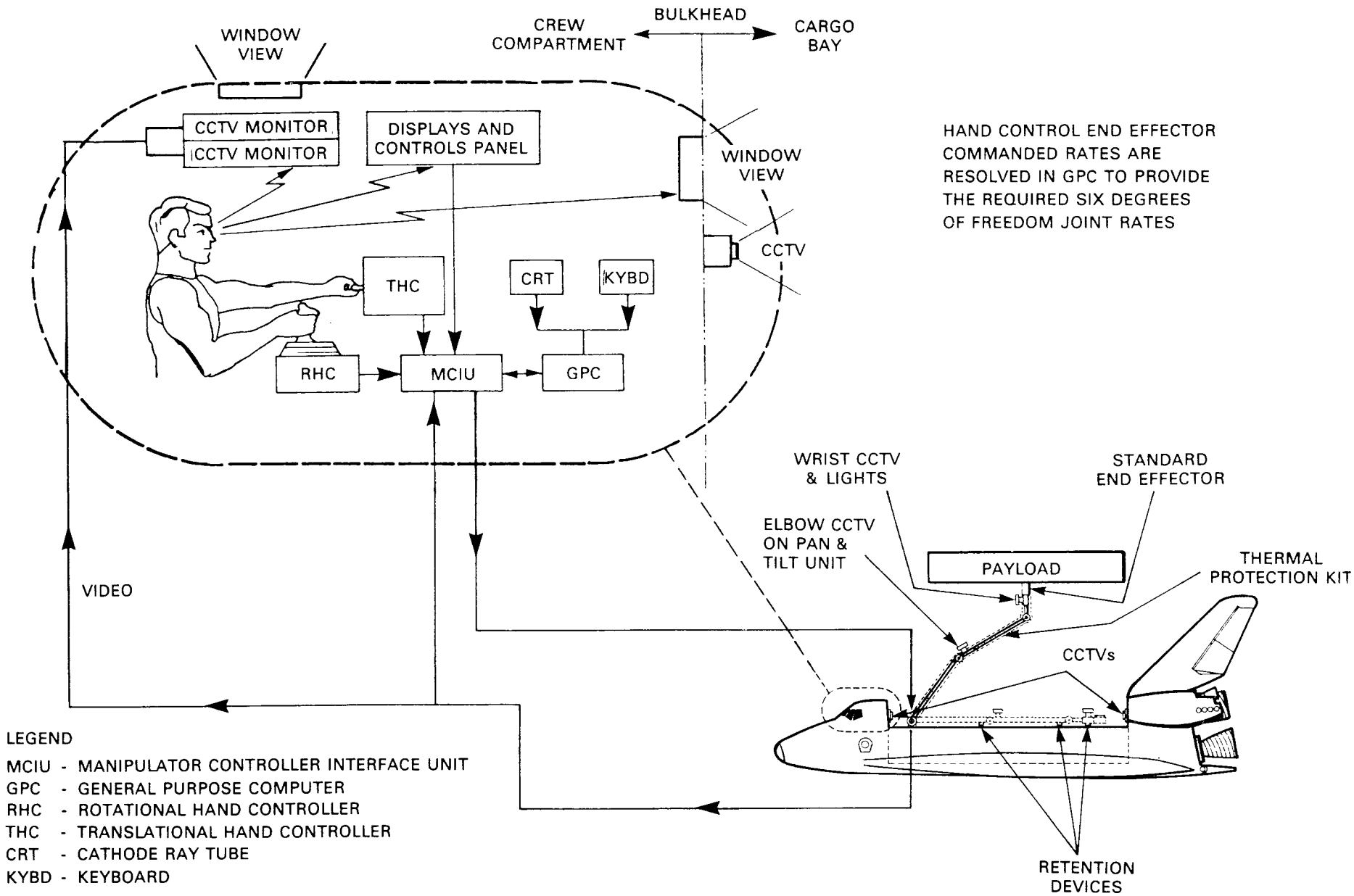

Figure 2-14: SRMS System Concept

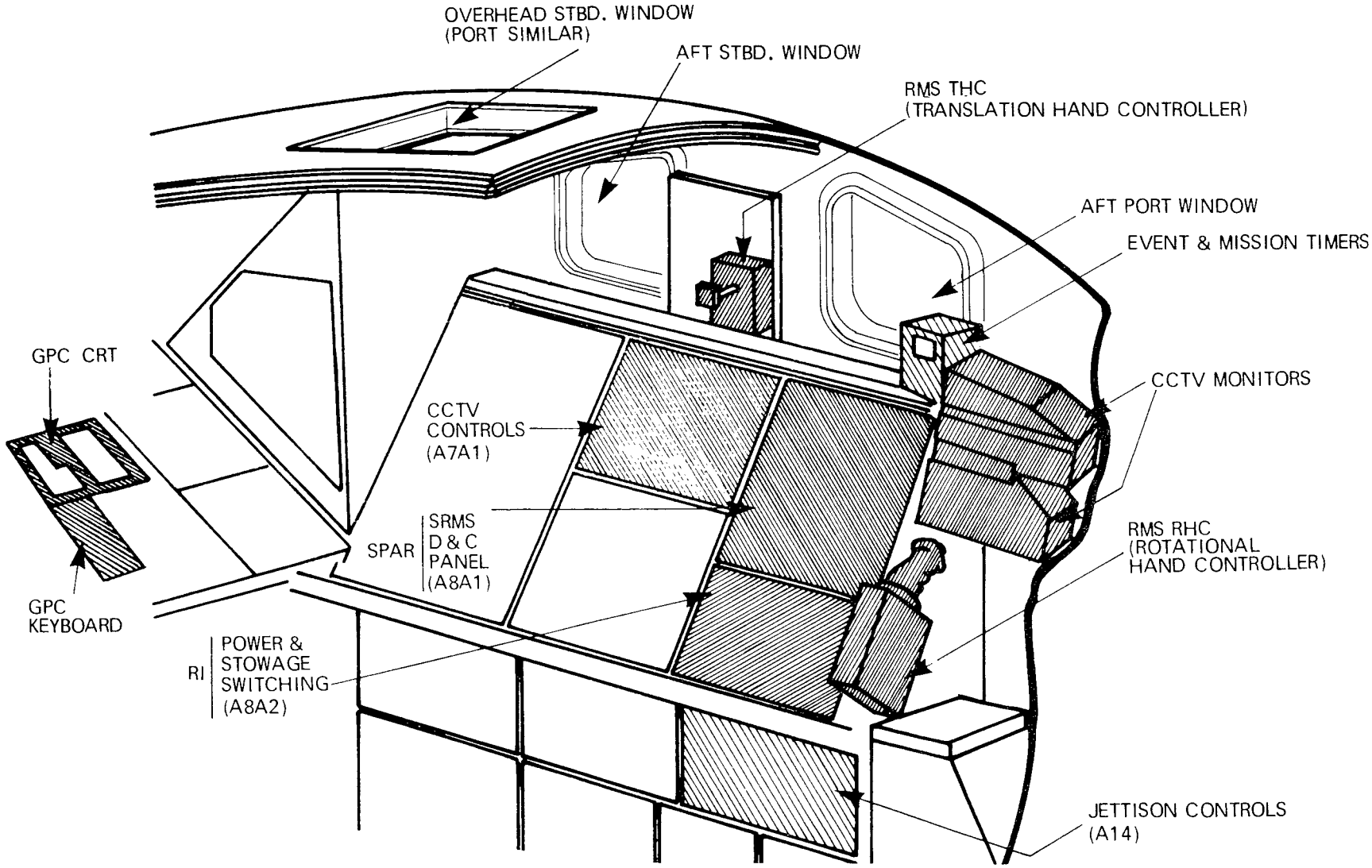

Figure 2-15: Orbiter Aft Station - Location of SRMS Equipment

elbow and wrist. The weight of the unit is 410 kilograms which includes a wrist mounted CCTV with lights. An elbow mounted CCTV is also available which adds another 13 kg.

The SRMS is capable of deploying payloads of up to 29,483 kg; however, nominal payloads to be retrieved should be limited to 14,515 kg.

There are four modes of operating the SRMS, each with its special capabilities and applications:

Direct Drive Mode - This is a hardwired command mode which bypasses the normal RMS software routines. Control is through the RMS control and display panel, and the results of the commands are displayed on the CRT. A backup direct drive mode is also available as a backup hardwire system with no display integration. This is not a nominal control mode.

Single Joint Drive Mode - This is an operator controlled movement of the SRMS on a joint by joint basis through joint switches on the AFD control and display panel. The SRMS software monitors give warnings to joint angle limits and controls the joint drive speeds. It also provides joint position feedback on the displays.

Manual - Augmented Mode - Control of the RMS is initiated by the RMS operator from the AFD using the rotational hand controller (RHC) and the translational hand controller (THC). The hand controller inputs are passed to the RMS software in the general purpose computer and the software resolves and integrates the commands into end effector position and location for the RMS.

Automatic Mode - Control in this mode is via commanded positions stored in the general purpose computer. The SRMS is commanded to follow either selected trajectives or to arrive at a specified destination given the terminal coordinates. Operator initiation is all that is required for manipulator movement; the RMS software commands the routine following the selection of the automated routine.

In addition to the controlling modes, there are two rates of movement for the RMS, coarse and vernier. For a 14,500 kg payload, the maximum translation and rotation rates are as follows:

Maximum Rate	Coarse	Vernier
Payload Translation	0.2 fps	0.01 fps
Payload Rotation	0.0083 rad/sec	0.00415 rad/sec

The rates can be premission specified, or if necessary, they can be adjusted while in flight.

Special SRMS End Effectors - Special end effectors for the SRMS may be required to handle the beams or columns as well as the unions, joints, conduits, experiment hardware, solar blankets, etc. For comparison, we can use the estimated costs for the standard SRMS end effector and a special purpose end effector (SPEE) developed for Goddard

Space Flight Center (GSFC) for the Multimission Modular Spacecraft (MMS). The user should note that more than one type of end effector may be required for a single LSS assembly flight and the user may be responsible for the costs of several end effectors.

Software Subsystems - Computer software will provide for remote systems logic such as tip position control of a manipulator subsystem or computer resolution of a site sensor subsystem. Software can support virtually all subsystems but may be required for some, again depending upon applications. Software support should be considered in view of power requirements, development expenditures and reliability, which may indicate a less costly approach ($500,000 - $12,500,000 FY85$).

Operators Station - The operators station will provide an integrated console for control of the remote system by the human operator. The operators station can be in proximity to the remote system or removed by some great distance, but should provide for complete control of all remote subsystems and a comprehensive display of the task site or remote environment. The operators station serves as the "flight cabin" of the remote systems and, as such, must be equipped with control and monitoring equipment for all task functions ($40,000 - $1,000,000 FY85$).

Task Site - The task site is any location or station used for the performance of a remotely controlled operation. Obviously, during the assembly of a large space structure, there are many tasks to consider, such as the unstow/deploy site, transportation route and terminate/-assembly site. Task sites can also be viewed as being prepared or non-prepared, depending on operations. Visual targets, grappling fixtures, manipulator adaptable fittings, work site lights, and docking modules would be examples of prepared work sites. Remote contingency operations might involve non-prepared task sites such as retrieval of free floating debris around a large space structure.

Remotely managed systems are truly in their element when they have been designed to enhance and extend the human operator's capability while relying on the human's manipulative and cognitive control expertise. Remote systems can be designed to exceed the human limits of strength, endurance, size, speed, mobility, sensing, stress, storage and retrieval capacity and isolation. As such, they enable the operator to perform LSS assembly functions which far exceed the capacity of EVA, but not without cost.

Remote System Performance Times

Remote system times from simulations and engineering models can be useful to the assembly analyst even though the times are given in rather large operational blocks. The following selections provide representative timelines from simulations and models. They are organized by major mechanism or task model.

REMOTE TASK ELEMENT

REF.	1.0 TRANSFER/MOVE	TIME HRS:MIN:SEC
10	1.1 RMS from payload to precradle	00:03:00
10	1.2 RMS from uncradle to payload	00:05:00
13	1.3 RMS from cradle to midbay	00:01:30
13	1.4 RMS orient and capture grapple fixture	00:02:00
13	1.5 RMS release grapple fixture	00:00:30
13	1.6 Stow RMS in cradle and secure	00:19:45
13	1.7 Release from cradle and checkout RMS	00:09:00
33	1.8 TMS moves from 1000m to 200m of target	00:15:25
33	1.9 TMS moves from 200m to 25m of target	00:11:45
33	1.10 TMS moves from 25m to dock with target	00:11:45
	2.0 FINE PLANAR MOVEMENTS	
14	2.1 Move 2-9 cm to .7 cm terminal target	00:00:15
14	2.2 Move 2-9 cm to 1.0 cm terminal target	00:00:12
14	2.3 Move 2-9 cm to 1.3 cm terminal target	00:00:11
14	2.4 Move 2-9 cm to 1.6 cm terminal target	00:00:10
14	2.5 Move 2.2 cm with tolerance from .7 to 1.6 cm	00:00:18
14	2.6 Move 4.4 cm with tolerance from .7 to 1.6 cm	00:00:26
14	2.7 Move 6.6 cm with tolerance from .7 to 1.6 cm	00:00:27
14	2.8 Move 9.0 cm with tolerance from .7 to 1.6 cm	00:00:30
	3.0 WORKING TIP/EFFECTOR ORIENTATION	
24	3.1 +10°, -10° Yaw, joint control	00:00:01
24	3.2 +10°, -10° pitch, joint control	00:00:01
24	3.3 +10°, -10° yaw, integrated control	00:00:01
24	3.4 +10°, -10° pitch, integrated control	00:00:01
24	3.5 +10°, -10° roll	00:00:01
	4.0 WORKING TIP/EFFECTOR POSITION	
25	4.1 +10 cm, -10 cm Z joint control	00:00:10
25	4.2 +10 cm, -10 cm X joint control	00:00:16
25	4.3 +10 cm, -10 cm Y joint control	00:00:16
25	4.4 +10 cm, -10 cm Z integrated control	00:00:02
25	4.5 +10 cm, -10 cm X integrated control	00:00:04
25	4.6 +10 cm, -10 cm Y integrated control	00:00:04
28	4.7 Effector jaw open +10 cm	00:00:02
28	4.8 Effector jaw close -10 cm	00:00:02

REF.	5.0 INSERTIONS FOR DEXTEROUS MANIPULATION		HRS:MIN:SEC
19	5.1	Pin in hole, 0° alignment offset	00:00:20
19	5.2	Pin in hole, 10° alignment offset in yaw	00:00:23
19	5.3	7.9 mm pin in 9.5 mm hole	00:00:38
19	5.4	11.1 mm pin in 12.9 mm hole	00:00:32
19	5.5	14.3 mm pin in 15.9 mm hole	00:00:28
19	5.6	17.5 mm pin in 19.1 mm hole	00:00:29
21	5.7	Install 1.0-.5 kg block over index pin	00:05:10
26	5.8	Docking probe ± 5 cm, ± 5° capture	00:00:05
26	5.9	Docking probe latch	00:00:20
	6.0 POSITIONING/ORIENTATION		
10	6.1	Align effector at 10 cm	00:00:30
10	6.2	Terminal movement from 10 cm	00:00:15
3	6.3	Grasp handle larger than gripper	00:00:15
3	6.4	Grasp handle smaller than gripper	00:00:30
10	6.5	Release/remove effector to 10 cm	00:00:20
11	6.6	Orient with horizontal strut	00:00:45
11	6.7	Orient with vertical strut	00:01:00

	7.0 OPERATIONS		MASTER/SLAVE HRS:MIN:SEC	RESOLVED RATE
21	7.1	Turn valve open 180° cw	00:00:11	00:02:02
21	7.2	Turn valve closed 180° ccw	00:00:13	00:02:36
21	7.3	Install 2 prong plug	00:00:13	00:03:20
21	7.4	Remove 2 prong plug	00:00:08	00:02:36
21	7.5	Insert locking pin		00:03:00
2	7.6	Remove locking pin		00:02:00
2	7.7	Connect payload umbilical		00:06:48
2	7.8	Changeout antenna feed		00:23:00
	8.0 DEPLOY			
2	8.1	RMS deploy pallet		01:01:00
2	8.2	High gain antenna		00:16:00
2	8.3	Contamination control shroud		00:20:00
	9.0 RETRACT			
2	9.1	Solar panel - 10 m		00:25:00
2	9.2	High gain antenna		00:16:00

REMOTE OPERATIONS DATA FOR DEPLOYMENT AND REBERTHING OF INDUCED ENVIRONMENTAL CONTAMINATION MONITOR* (REFERENCE 12)

Deployment and Reberthing of Payload (Induced Environment Contamination Monitor) in Bay with Direct Vision and the Following Camera Configuration

	HRS:MIN:SEC
PRT and STBD Aft Bulkhead, Elbow and Forward Port Bulkhead Cameras	00:07:05
Without PRT Aft Bulkhead Camera	00:07:13
Without Elbow Camera	00:07:04
Without STBD Aft Bulkhead Camera	00:06:56
Without Either Aft Bulkhead Camera	00:05:40
Without Port Forward Bulkhead Camera	00:03:57
PRT and STBD Aft Bulkhead, Elbow and Forward Port Bulkhead Cameras with Single Joint Control, Berthing Only	00:04:41

REMOTE OPERATIONS DATA FOR FLIGHT SUPPORT SYSTEM OPERATIONS (MMS TYPICAL)

Close Spacecraft Retention Latch (lock)	00:00:24
Close Berthing Latches	00:00:18
Electrical Umbilical Drive (mate/demate)	00:00:10
Position FSS	
Pivot (pitch) 90°	00:10:00
Rotate (roll) 180°	00:01:40
(Typical for major positioning tasks)	

SOLAR MAXIMUM SIMULATION DATA

RMS Berthing with SMM and Stow in FSS (Data for 29 trials)	00:56:30

REMOTE OPERATIONS DATA FOR OPEN CHERRY PICKER (OCP) MANEUVERING TIMES (REFERENCE 32)

(Example given for critical RMS Movements)

Move RMS from Park to Grapple with OCP	00:03:43
Move OCP from FSS to AFD window	00:15:41
Reberth OCP using:	
integrated controllers	00:16:14
single joint controllers	00:39:45
Reberth SRMS using:	
integrated controllers	00:11:12
single joint controllers	00:18:50

* IECM is 1m x 1m x 1.3m and 37 kg.

PAYLOAD DEPLOYMENT AND RETRIEVAL SYSTEM (PDRS)

	HRS:MIN:SEC
BACKGROUND	
On Orbit Checkout	00:20:00
Power Up/Uncradle	00:10:00
OPERATIONS FOR DEPLOYMENT	
Move, Orient and Grapple Payload in Bay	00:05:00
Maneuver Payload from Berth until Clear of Bulkhead	00:10:00
Maneuver Payload from Hover Position to Deploy	00:10:00
Release Payload and Maneuver RMS to Precradle	00:03:00
Cradle/Powerdown	00:10:00
Deployment TOTAL Operation	01:08:00
OPERATIONS FOR RETRIEVAL	
Move and Orient RMS for payload capture	00:05:00
Proximity Operation (despin, etc.)	mission dependent
Grapple Payload	00:02:00
Maneuver Payload from Capture to Hover Position	00:10:00
Berth Payload	00:15:00
Release Payload	00:00:30
Maneuver RMS to Precradle	00:01:30
RMS Cradle/Power Down	00:10:00
Retrieval TOTAL Operation Time	01:14:00

OPERATOR IN THE LOOP, REMOTE SYSTEMS ASSEMBLY TIMELINE

MODULE EXCHANGE, 2 Arm, task site unprepared

Background

	HRS:MIN:SEC
Control/display power up	00:05:00
Control/display verification	00:05:00
Control/display calibration	00:10:00
	00:20:00

Operations

Maneuver to 50 meters	mission dependent
Station keep/inspect	00:06:00
Orient for approach	00:01:30
Close from 50 to 10 meters	00:03:37
Orient for docking	00:01:45
Null out roll rates °1/sec	mission dependent
Null out cone rates °1/sec	mission dependent
Null out nutation rates	mission dependent
Close from 10 meters to capture	00:05:28
Activate capture device/dock	00:02:00
Despin 1°/10 sec.	mission dependent
Stabilize	dependent on masses
Unlock #1 manipulator arm (3m type)	00:01:00
Uncradle #1 manipulator arm	00:01:30
Deploy manipulator arm	00:01:30
Verify manipulator operation	00:05:00
Orient for grapple of access panel	00:00:45
Position over grapple fixture	00:00:30
Grapple	00:00:15
Verify-visual/instrument	00:00:30
Unlock #2 manipulator arm (3m type)	00:01:00
Uncradle #2 manipulator arm	00:01:30
Deploy manipulator arm	00:01:30
Verify manipulator operation	00:05:00
Orient arm for panel release	00:00:45
Position arm for panel release	00:00:30
Mate with panel release screws/locks (move 30 cm)	00:00:53
1st panel screw/lock unfastened, ¼ turn	00:00:12
Nth panel screw/lock unfastened each	00:01:35
#1 arm remove panel (move 100 cm)	00:00:50
#2 arm orient for module grapple	00:00:30
#2 arm position for module grapple	00:00:25
#2 arm grapple module fixture (move 30 cm)	00:00:41
Verify - visual/instrument	00:00:30
#2 arm withdraw module (61 cm x 91 cm x 61 cm)	00:01:00
Verify module clear	00:00:30
Transfer module to storage 120°	00:00:25
Stow old module	00:01:00
Orient for grapple of new module	00:00:45
Position for grapple of new module	00:00:30
Grapple new module	00:00:41

Operations (continued)

	HRS:MIN:SEC
Transfer module 120°	00:00:25
Position and orient for insertion	00:00:50
Align and insert new module	00:01:30
Verify completed insertion	00:00:45
#2 arm release module	00:00:05
#2 arm move clear of access area	00:00:15
#1 arm transfer panel	00:01:00
#1 arm align panel with access	00:00:45
#1 arm position panel over access	00:00:30
#2 mate with panel locks	00:00:53
#2 lock 1st panel screw, ¼ turn	00:00:12
Nth panel lock secured, each	00:01:35
Cradle #1 arm	00:10:00
Cradle #2 arm	00:10:00

Module Exchange, orbital servicer, 1 arm fixed trajectory

Operator in the loop:	
30 TV frames/sec	00:29:00
5 TV frames/sec	00:31:30
1 TV frame/sec	00:33:45
Automated orbital servicer computer controlled exchange of a single module	00:10:00

Remote system reliability is a major cost consideration; critical component failure can lead to loss of assembly activity, structure damage or mission failure as a worst case. The research and system development necessary to prepare for a prototype system is another significant cost, and depending upon the new materials and technologies used in remote systems, space qualification can also effect costs. One means of reducing the R and D costs is to build upon the existing technology base that has developed around earth-based remote systems used in assembly and materials handling.

2.3 DATA BASE C - AUTOMATED ASSEMBLY TECHNIQUES FOR LARGE SPACE SYSTEMS

Our experience with automated assembly in space is, at best, limited. While automated missions have been flown for planetary exploration and fly-by, and automated experiments have been part of all of the major science missions, automated assembly of structures has remained earthbound. There are proposals for automated and semi-automated assembly missions, and there have been components for automated fabrication and assembly designed and demonstrated in research laboratories. To date, however, our assumptions about space-based automated assembly have been predictive and based upon data from earth-based, automated assembly systems.

The cost for automated assembly systems depends on several factors relating to the specific device and the particular structural assembly application. The primary cost driver will be the research and development required to develop the system to the point where it can be fabricated. This cost includes preliminary design, mockup development, testing, reviews, redesign, and preparation of flight unit fabrication drawings. Fabrication cost will be a second major cost factor and will include test, checkout, qualification, and preparation for flight. Launch and return costs are a function of size, mass, number of flights and special handling provisions. The fourth cost factor, orbital operations cost, includes crew time, supplies and shuttle utilities (i.e., electrical power) and will be a function of the size of the automated system and the structure to be fabricated or assembled.

When one considers the costs and benefits of employing automated assembly systems, it is recognized that precise predictions cannot be made. Rates of production, reliability, servicing, refurbishment, and system safety must be garnered from available engineering data or even less well defined concept papers. Costs can be predicted from similar space qualified systems or from operating earth-based systems, with an appropriate "unknown" as part of the costing equation to account for unique system characteristics or for qualification for space flight.

<u>Automated tasks with operator override</u> is a step in the evolutionary progress which advances the art of assembling space structures to the point that we have begun to realize in earth-based assembly and processing plants. The assembly tasks are initiated by the human, but the assembly process is carried out without any requirement of human intervention. As long as the assembly process continues within limits, the human is free to stand to other tasks which need not be related to the assembly mission. This approach would be ideal for missions involving uncomplicated assembly which could be carried out over a long period of time, such as a spinning operation for antennas. It is generally recognized, however, that single tasks are most appropriate for this level of automation, similar to auto body welding by robots on earth. More complex assembly processes require a much higher order of software control.

<u>Automated assembly preprogrammed</u> is a method of assembly which can be designed to carry out multiple tasks on the basis of software control of the machine system. The software issues preprogrammed instructions

and then monitors the machine system performance. At predefined points in the assembly sequence, the software can issue new commands and have the system perform new functions. An example of such an approach would be to (1) extrude assembly beam, (2) cut beam to specific length, (3) fit beam end with end connector, (4) join beam end connector to space structure, (5) verify correct connection and geometry, and (6) repeat (1). Each step is commanded and monitored by the onboard software, and there is no requirement for human supervision. The assembly program has to be clearly defined and verified in order for this approach to be effective. Systems such as the automated space spider and the automated Orbital servicer are examples of preprogrammed automated systems, but it must be well noted that these are only proposed systems. We are not far enough along the developmental train of automated assembly systems where the systems are at the conceptual stage or at the laboratory and experimental level.

Automated assembly with alternative logic presents us with an intelligent assembly machine capable of deciding among alternative assembly modes based upon system performance, structural requirements, malfunctions, environmental circumstances, and other operating parameters. The software development requirements for the necessarily complex merchandise assembly program are very significant, but can be justified in terms of assembly reliability, the ability to integrate many functions in one machine system, and failure diagnosis and recovery. Even earth-based systems at this developmental level are only in the conceptual/experimental stages. So, while the potential applications are good, the source data are highly speculative.

Automated assembly with artificial intelligence is essentially the stage at which we began this developmental path, with a singular critical difference--the human is totally removed from the system definition. The responsibility for decision making, commanding, manipulation, sensing, diagnostics and similar human capabilities resides with the autonomous machine system in cooperation with its software systems. While no system exists that can accomplish these requirements, research is pressing upon the boundary between human and machine, and for exotic and hazardous environments, humans generally agree they would rather have machines there. So this assembly alternative, while not developed, is the end point for many of the advanced concepts being put forth for the next century and as such should be included for advanced assembly systems.

Automated System Costs

There are several classes of automated systems from which we can draw data based on automated terrestrial systems. Since space-based automated LSS assemblers have not been qualified, this earth-based information seems to be an appropriate starting point. Table 2-4 presents the data for the earth-based units, while Table 2-5 extrapolates data for space qualification on an estimate basis.

A suggested approach to costing space-qualified automated systems includes the determination of the costs of a similar or related ground-based function, e.g., assemblers, sensors, transport, etc. Such costs for consideration appear in Tables 2-4 through 2-6. Others may be

Table 2-4 : Earth-Based Automated Assemblers/Part Handlers

MODEL	EARTH APPLICATION	1G TIP WT. CAPACITY	NON-SPACE QUALIFIED COSTS (FY85$)	FY85$/KILO
ASEA IRB-6	Parts handling	6 kilos	86,700	$14,450/kilo
ASEA IRB-60	Parts handling	60 kilos	130,000	2,170/kilo
GN-FANUC-1	Parts handling	20 kilos	43,300	2,170/kilo
Industrial Automates 9500	Parts handling	4.5 kilos	17,300	3,840/kilo
Modular Machine (MOBOT)	Parts handling	200 kilos	21,700	108/kilo
Rim Rock 195	Parts handling	27 kilos	86,700	3,180/kilo
SEIKO 7000	Assembly	.5 kilos	11,500	23,000/kilo
Unimation/Puma	Assembly	2.2 kilos	50,600	23,000/kilo

Table 2-5: Assemblers/Part Handlers 1st Unit, Flight Qualified Production Costs (Estimated FY85$)*

	PART HANDLERS		ASSEMBLERS	
Design/Development	15%	6.5	23%	54.4
System Engineering	4%	1.7	6%	14.2
Software	3%	1.3	17%	40.2
System Test	12%	5.2	14%	33.1
GSE	10%	4.3	2%	4.7
Management	5%	2.2	5%	11.8
Structure Subsystems	51%	22.0	33%	78.2
	100%	43.2 mil.	100%	236.6 mil.

*Estimated costs based on data extrapolated from Robotics International, Society of Manufacturing Engineers.

Table 2-6: Automated System Application of Sensor Subsystems

DEVELOPER	APPLICATION	NON-SPACE QUALIFIED COST (FY85$)	EST. SPACE QUALIFIED SYSTEM COST (FY85$)
National Bureau of Standards	Target sensing through optical arrays mounted on manipulator effector	$ 65,000	$210,000
National Bureau of Standards	Pattern recognition in visible spectrum (target recognition) synthetic vision	$122,000	$350,000
Massachusetts Institute of Technology	Visual display of manipulator tactile information	$ 52,000	$260,000
Machine Intelligence	Pattern recognition in visible spectrum (target recognition)	$ 81,000	$290,000

obtained from the various manufacturers of ground-based robots performing the required function. Once costs are determined for all necessary functions, they should be added together. An additional cost for integrating the functions should be assessed. Since most ground-based robots are quite large, additional costs will be necessary for packaging the assembly robot within the Space Shuttle dimensional constraints. Lastly, a cost is necessary for space qualifying the integrated system.

Automated System Software Development

The hardware systems for automated assemblers can be direct extensions of existing hardware, but the software for autonomous assemblers will have to be derived from research and experimental models being developed in artificial intelligence laboratories. One example of a hierarchical software system for the data based management of an assembly system comes from a prototype automated machine shop being developed by the National Bureau of Standards. Development cost estimates for controlling, scheduling, operations, diagnostic and interactive communications software are based upon labor effort needed to develop the software system. The FY85 dollar cost is projected to $1.45 million for the controlling software programs.

Automated System Sensor Development

Most automated system processes are based upon indexing the pieces being assembled. Other sensor systems under development are optical arrays, radars and visual recognition systems. Developmental information is presented in Table 2-6.

Performance of automated systems is strictly dependent upon design. Unlike human systems involved in the manual and remote assembly scenarios, the design engineer can specify speeds, limits, tolerances and other parameters for automated systems. Consequently, a description of the task elements and their times is a function of the specific engineering requirement. Some typical ranges are provided below from earth-based automated assembly systems, but these are times taken from systems where production speed is important, and this is not necessarily the case for earth-based systems. Reliability of the automated system is assumed to be much more important than speed.

Automated Task Element Space-Based Module (From Automated Servicer Simulation and Operating Criteria)

		HRS:MIN:SEC
1.0 ORIENT ASSEMBLY ARM		
1.1	Axial Orientation through 90° 10°/sec	00:00:09
1.2	Radial Orientation through 90° .1°/sec	00:01:30
1.3	Axial Orientation through 180°	00:00:18
1.4	Radial Orientation through 180°	00:03:00
1.5	Shoulder Roll through 90°	00:00:08
1.6	Shoulder Roll through 180°	00:00:16
1.7	Wrist Roll per 90°/continuous	00:00:07
1.8	Elbow Pitch per 90°/±135°	00:00:05
1.9	Wrist Pitch per 90°/±90°	00:00:09
EARTH-BASED MODEL (Automated Assembler)		
1.10	Maximum Radial Velocity	.76m/sec
1.11	Maximum Vertical Velocity	1.27m/sec
1.12	Maximum Rotational Velocity	110°/sec
1.13	Wrist Axes, Maximum Velocity	110°/sec
1.14	Radial Arm Motion (shoulder yaw)	1.00m/sec
1.15	Vertical Arm Motion (shoulder pitch)	1.35m/sec
1.16	Rotary Arm Motion (shoulder roll)	90°/sec
1.17	Wrist pitch	90°/sec
1.18	Wrist yaw	150°/sec
1.19	Mass handling	60 kg
2.0 TRANSFER - EARTH-BASED DATA, MAXIMUM AVAILABLE RATES WITH 60 kg MASS		
2.1	10 feet X, Y, Z - gantry mounted assembler	00:00:04
2.2	15 feet X, Y, Z - gantry mounted assembler	00:00:05
2.3	20 feet X, Y, Z - gantry mounted assembler	00:00:07
2.4	40 feet X, Y, Z - gantry mounted assembler	00:00:13
2.5	60° radial shoulder, 60°/sec	00:00:01
2.6	120° radial shoulder	00:00:02
2.7	180° radial shoulder	00:00:03

STORED TRAJECTORY TRANSFERS

2.8	Fore/aft range and velocity	800mm at 80mm/sec
2.9	Vertical range and velocity	180° at 18°/sec
2.10	Sweep (radial) range and velocity	340° at 17°/sec
2.11	End effector range and velocity	50mm at 5mm/sec
2.12	End effector pitch	200° at 33°/sec
2.13	End effector roll	340° at 34°/sec

Proposed Space Systems/Automated Assemblers

While earth-based systems provide one indication of automated system costs, proposed space systems can give us another. The costs are based upon design criteria and mission experience with similar systems, and as such are subject to some variance around the cost figure given.

Automated Beam Builder - The automated beam builder (ABB) is a metal or composite forming device that takes rolled sheet stock and prefabricated structural components and forms an open, triangular beam on-orbit. Since the structural beams are fabricated from materials stored in high density rolls or stacks, the overall packing density may be higher than with ground fabricated beams or columns.

System Description - The following paragraphs describe the ABB's physical characteristics, power requirements, material requirements and the crew interfaces.

a. Function - The ABB, shown in Figure 2-16, is a one-G development model built to demonstrate the beam fabrication concept. The ABB forms the three beam caps from rolls of sheet stock and then attaches preformed vertical and diagonal braces with spot welds. The end product is a stiff beam 1.15 m on each side with bays 1.5 m long. Joints for attaching beams to each other or to other equipment are separate cost items.

b. Size and Mass - A flight type ABB would probably be about 3 m long and 1.5 m wide and would weigh about 1200 to 1800 kilograms.

c. Power - Power requirements for spot welding the beam diagonals and cross pieces to the longerons would be quite high and not realistic for a flight beam builder. Instead, pierce and fold devices are being considered to satisfy the fastening requirement. Power requirements for this technique have not been defined.

d. Material Used - Both composite material (epoxy graphite) and .016 in. aluminum stock have been considered for ABB application.

e. Crew Interfaces - An ABB will likely be controlled by a payload or mission specialist. An EVA crew member may be required for joint installation, beam handling and ABB reloading.

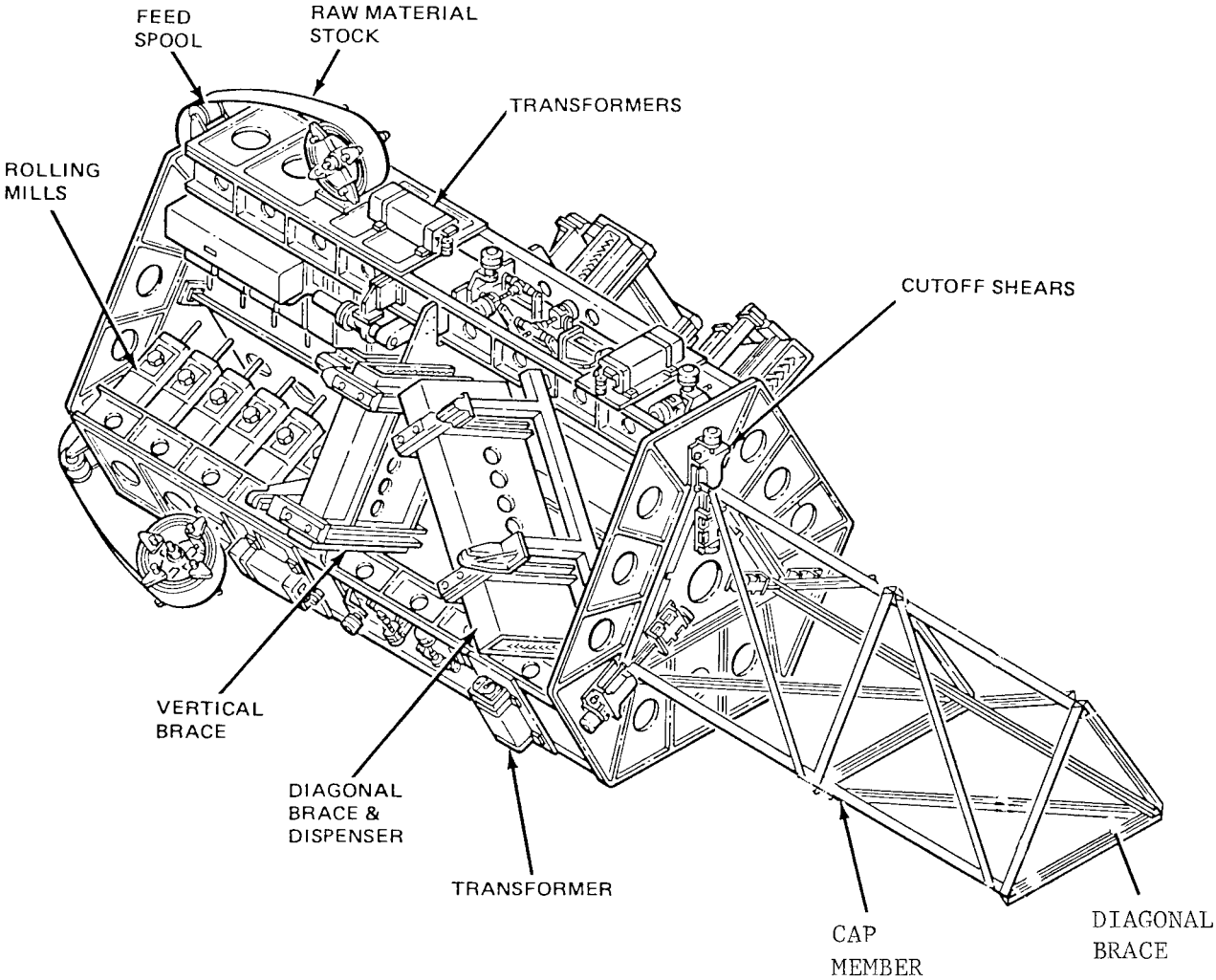

Figure 2-16: Automated Beam Builder (MSFC's Development Model)

Cost Data - The cost estimates presented below were based on the MSFC/Grumman ABB and may be quite different for automated beam machines using another material or designed to build beams of a different size.

a. Research and Development Costs - Total cost for developing an ABB up to the point of fabrication and assembly is estimated to be $25,800,000 (FY85$).

b. Fabrication - Fabrication and checkout costs for an ABB is estimated to be $38,700,000 (FY85$).

c. Launch and Return - The cost for flying an ABB by itself will be a function of the size and mass. However, any LSS payload is likely to require a dedicated flight and consequently, the total flight cost would apply.

d. Orbital Operations - Cost for the payload or mission specialist is included in the charge for optional payload-related services.

Space Spider - The Space Spider (Figure 2-17) is a rail-guided automated fabricator which is capable of converting rolled stock material into a spiral frame about a central hub. Several Space Spiders working together can construct a spiral frame and cover this frame with a designated material to construct antennas, solar reflectors or a protective shell.

System Description - The following points highlight the capabilities and requirements of the proposed Space Spider systems.

a. Function - The Space Spider is designed to convert rolled stock into strut and rail braces around a central hub. In doing so, it produces a spiral frame structure about the hub. This frame can be used as a mounting platform for orbiting payloads, or it can form the basis of large antennas or other reflectors/receivers. The proposed system tracks its progress and maintains its translation by guiding itself along its previously fabricated roll braces.

b. Size and Mass - The proposed flight version of the Space Spider would be 15,000 lbs. The platform central core would be 2,500 lbs., leaving 47,500 lbs. for material to produce a 600 ft. diameter platform.

c. Power Requirements - The power requirements for a flight type Space Spider have been estimated to be 4.3 kw of peak power and 1.46 kw average power. Power requirements for a 600 ft. diameter platform would be 130 kw hours.

d. Crew Interfaces - The Space Spider will be under remote operator supervision, but primary control will be through autonomous on-board logic; consequently, no crew interface is anticipated for ongoing nominal control. EVA is proposed for deployment assist from the payload bay, assembly of the platform crew and module installation operations. Five 2-man, 6-hour EVA's are identified for a structure on the order of the geostationary platform.

Cost Data - The cost data presented are assumptions based on the proposed Space Spider Program and are taken from MSFC Program descriptions, although no attempt was made to firmly cost the system during its study phase.

a. Research and Development Costs - The required development costs and cost of research to advance remote systems technology are estimated to be about ten times the proposed cost of a demonstration model, or $85,140,000 (FY85$).

b. Production and Checkout Costs - The costs associated with the production of a Space Spider are estimated to be greater than those of R&D, or $105,780,000 (FY85$).

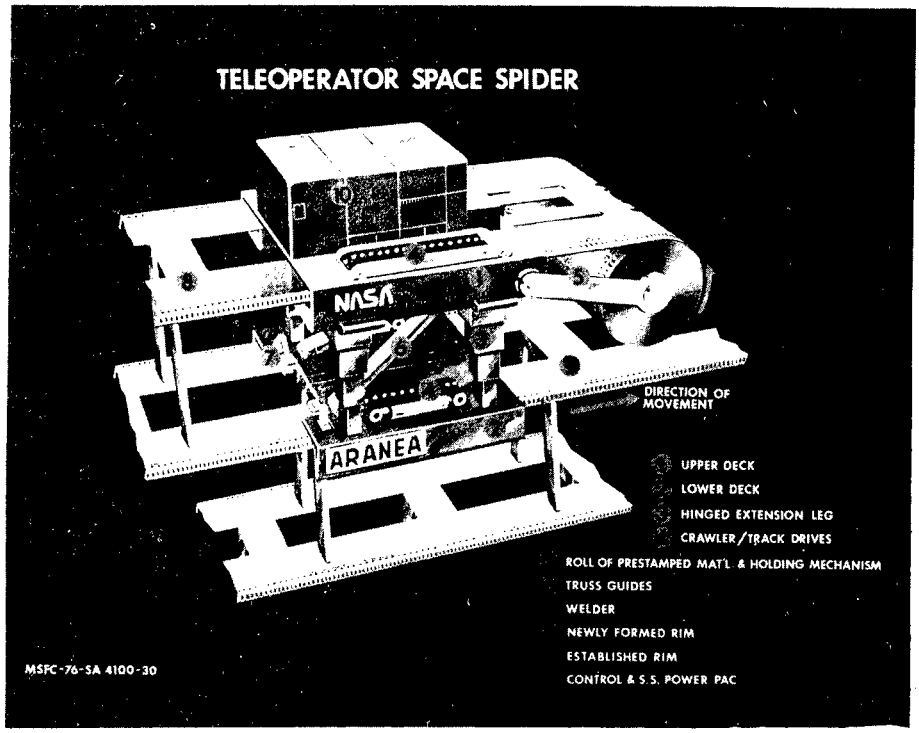

Figure 2-17: Teleoperator Space Spider Machine

c. Launch and Return - Total flight costs are assumed to apply for low earth orbit operations.

d. Orbital Operations - Dedicated flights already include payload specialist costs. Assuming fully automated operations, orbital operations would be costed in production and R&D costs. EVA operations are estimated to be between $1,290,000 and $2,580,000 (FY85$).

Automated Orbital Servicer - The orbital servicer is envisioned as a general purpose on-orbit satellite servicer which is transported to orbit by the shuttle and then remotely piloted and docked to a satellite needing refurbishment or repair. It can also be used to automatically service payloads on large space structures.

System Description - The following sections detail some of the significant features of the Automated Orbital Servicer (AOS). Figure 2-18 shows an AOS concept.

a. Function - The functions of the AOS are to approach and rendezvous with a satellite using a power module such as the teleoperator maneuvering system or the full capability Space Tug. The AOS then closes and docks with the satellite, using the AOS docking probe and the satellite's capture mechanism. Once docked, the AOS manipulator arm extracts serviceable modules from the satellite/orbiting payload and replaces them with fresh modules contained in the AOS. These functions can be carried out in operator supervised or operator controlled modes with the potential for autonomous control.

b. Size and Mass - The current size is a 15-ft. diameter stowage rack, approximately 4 ft. thick, with the unloaded stowage rack frame and module changeout mechanism weighing approximately 8,000 lbs.

c. Power Requirements - To be fully defined at a later date.

d. Crew Interfaces - A control panel with integrated hand controllers or joint-by-joint controllers will be located in the aft flight deck. Visual feedback will be via TV systems and direct viewing.

Cost Data - Based upon the MSFC/Martin Marietta integrated orbital servicing survey, the following costs for development and production are presented.

a. Research and Development Costs - Costs for development and evaluation of the AOS are estimated to be between $77,400,000 and $85,140,000 (FY85$).

b. Production - Production costs are between $36,120,000 and $46,440,000 (FY85$).

c. Launch and Return - The AOS does not require a dedicated shuttle flight and can operate from the orbiter bay, in which case partial flight charges would be levied depending on weight and volume of the mission. The AOS can also be placed into higher orbits with an orbital transfer vehicle (OTV), in which case the mission would be dedicated and the additional costs for the OTV would be included. These factors give rise to a cost range of $77,400,000 - $159,960,000 (FY85$).

d. Orbital Operations - The operations costs cited by Martin Marietta range from $774,000 - $2,580,000 (FY85$) and include on-orbit maintenance costs and servicing operations.

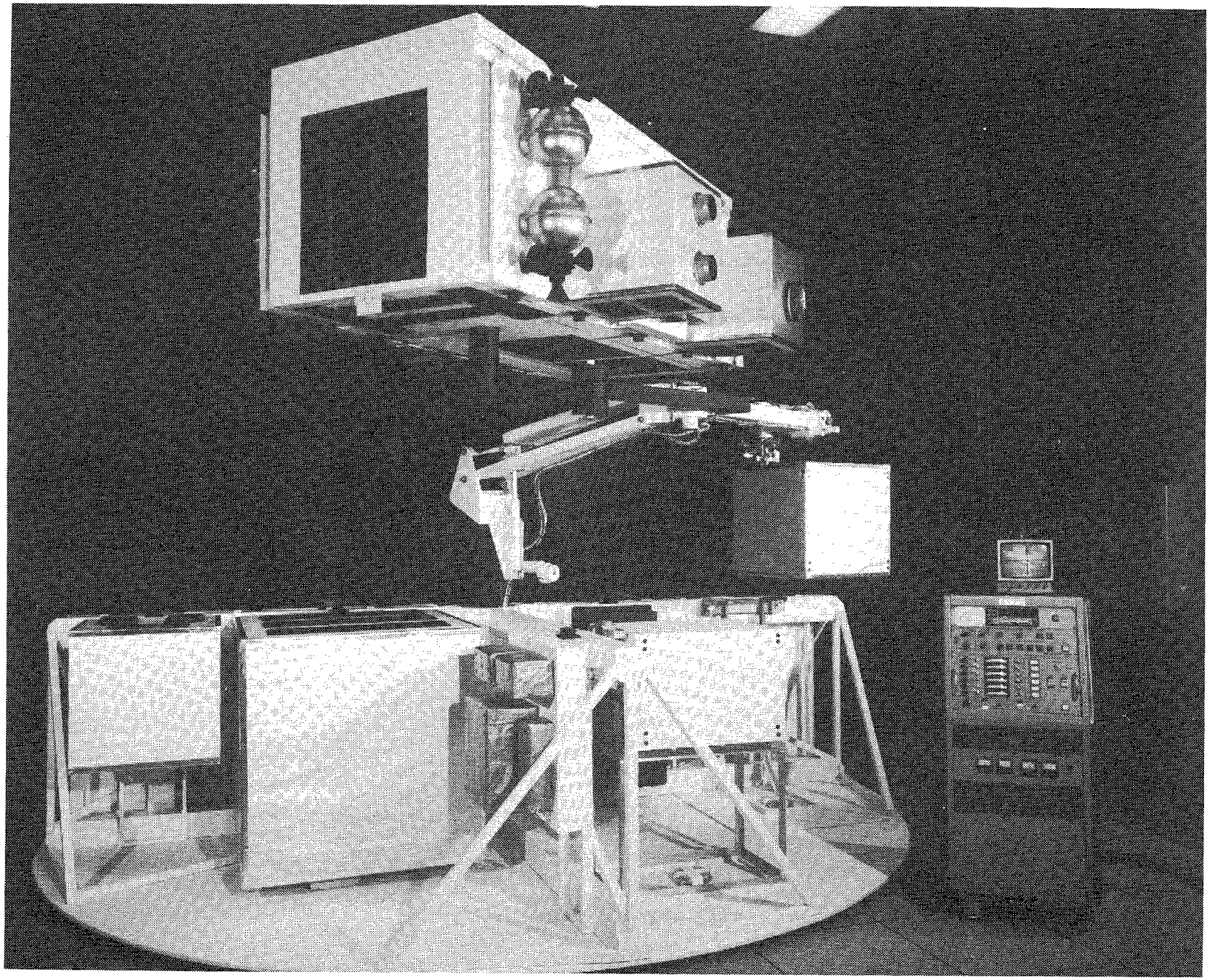

Figure 2-18: Automated Orbital Servicer Simulator

2.4 DATA BASE D - STS COST ELEMENT DESCRIPTIONS

The delivery of structures, components, stock material, assembly tools and human labor to a LSS assembly site depends on the STS capabilities. While the actual orbital delivery is not part of the assembly costs, how the cargo is manifested, the required STS assembly support, requirements for STS mission unique services, an additional RMS, and similar Shuttle-provided services which are directly related to LSS assembly can be considered in the MMAA.

This data base provides a summary of STS capabilities and limitations and costs associated with LSS assembly. Depending upon the mode of assembly, STS related costs can be expected to have a significant influence upon the overall assembly costs.

Flight Operations

The cost data presented in the paragraphs below were derived from the several NASA documents listed below. The user is encouraged to obtain and use these documents if the information presented in this report is insufficient for a particular application.

- Federal Register, Vol. 42, No. 14 - January 21, 1977, Chapter V, National Aeronautics and Space Administration, Part 1214, Reimbursement for Shuttle Services.

- Space Transportation System Reimbursement Guide, Civilian U.S. Government and Non-U.S. Government, National Aeronautics and Space Administration, JSC-11802, May 1980.

- Space Transportation System Reimbursement Guide, Civilian U.S. Government and Non-U.S. Government, National Aeronautics and Space Administration, JSC, (no document number or date).

- Space Transportation System Determination of Charge Factor, National Aeronautics and Space Administration, JSC, (no document number), May 1977.

- Space Transportation User Handbook, National Aeronautics and Space Administration, JSC, (no document number), July 1977.

- NASA Management Instruction, Utilization of and Funding for Space Transportation System (STS) Elements and Services for NASA and NASA-Related Payloads, NASA Headquarters, NMI 8610.12, June 8, 1979.

- NASA Management Instruction, Reimbursement for Shuttle Services Provided to Civil U.S. Government Users and Foreign Users Who Have Made Substantial Investment in the STS Program, NASA Headquarters, NMI 8610.9, February 11, 1977.

Reimbursement Categories - Shuttle users will be in one of three classes with flight costs calculated differently for each class. These three classes of users are:

1. Non-U.S. Government

   - Private individuals or organizations in the United States or territories and public organizations which are not part of the Federal government

   - Private individuals, public or private organizations, or governments of foreign nations or international organizations. Exceptions qualifying for lower flight prices are governments of Canada and of nations participating in Spacelab development

   - Agencies of the U.S. or Canadian governments or the European Space Agency (ESA)

2. Civilian U.S. Government

3. Department of Defense.

Table 2-7 lists the costs for the four user classes described above. This table assumes a dedicated LSS flight with no costs shared with small payloads.

Table 2-7: Standard Space Shuttle Price for Dedicated Users (through 1985)

USER CLASS	COST (FY85$) Transportation Charge	Use Fee (Constant)
Non-U.S. Government	$46,440,000	$11,090,000
Civilian U.S. Government	$46,440,000	N/A
Department of Defense	$31,476,000	N/A
Exceptional Program	$28,380,000-$36,120,000	N/A

Special consideration is given to users having an experimental, new use of space or having a first time use of space that has great potential public value. This is called an "exceptional determination." A dedicated flight with this classification will cost in the range of $20 to $30 mission (FY85$) as determined by the NASA Administrator.

The cost for assembling a large structure in space will be a function of the costs associated with the particular structure, the mode of assembly, and the cost of using standard STS services. The costs incurred because of the specific LSS design can be categorized as follows:

- o Flight Operations
  - Standard flight charge
  - Optional services

- o Labor
  - On-orbit EVA and intravehicular activity (IVA)
  - Crew training
  - Ground support

- o Crew Support Equipment
  - Pressure suits (EMU)
  - Tools
  - Manned maneuvering units (MMU's)
  - Handrails and foot restraints
  - Tethers
  - Workstations

- o LSS Hardware
  - Beams and columns
  - Joints
  - Assembly fixtures
  - Tools

- o Remote Systems
  - Manipulators
  - Teleoperator

- o Automated Systems
  - Automated assemblers
  - Automated fabricators
  - Autonomous robots

Standard Flight Charge - The price charged to users for standard shuttle transportation will be based on anticipated costs accrued over a 12-year period. The price will be fixed (excepting inflation adjustment) for flights in the first three years of operations. The cost for LSS flights after the third year of STS operation will vary significantly from the costs defined in this document. The FY85 dollar figure used for this document is $46,440,000 per flight. Projected estimates from the Office of Space Transportation Operations put the Shuttle operation charges at $97.5 million in 1985, $106 million in 1986, and $116 million in 1987.

Schedule Options - Several schedule options that can impact the flight price are available to the STS user. A fixed price option for future flights in a given year beyond the three-year fixed price period will be made available to users already contracting for STS launch services. NASA will be reimbursed the user's flight price compounded at 8% for each year beyond the fixed price period. The fee for this option is $2,580,000 (FY85$).

Several other schedule options exist but are not likely to affect the cost of a LSS payload flight. These options are short term call up, accelerated launch date, postponement, and cancellation.

Calculation of Reimbursements - The total price for STS launch services can be determined by summing the charges for:

1. Standard STS services
2. Optional flight systems
3. Payload-related optional services
4. Special fees such as schedule options.

Generally, NASA's responsibilities under the standard shuttle services agreement are:

1. Furnishing STS/user interface specifications
2. Providing for preparation and checkout of the STS for each payload launch
3. Managing the Shuttle/payload integration
4. Regulating access to and operation of the payload from delivery at the integration facility through separation in-orbit
5. Conducting all launch services as agreed with the user.

Under these same agreements, the STS user will be responsible for:

		Estimates of Percent Cost Contribution
1.	Delivering the payload to the launch site in a ready-to-fly configuration	49%
2.	Providing payload ground support equipment and personnel to prepare the payload for launch	9%
3.	Providing to NASA all mission requirements and constraints	4%
4.	Assuring compatibility of the payload with all STS interfaces	4%
5.	Providing to NASA payload design specifications and flight qualification test plans	12%
6.	Providing to NASA information regarding hazardous equipment or crew operations	2%
7.	Providing payload-specific training to the NASA EVA RMS crew and to Payload Operations Support Center personnel	2%
8.	Provide program management	6%
9.	Refurbishment	2%
10.	Contingency and fee	10%-30%

The percentile cost contributions are based on historical data for mechanized, unmanned space missions and are estimates of costs only. The sum varies from 100% to 120% depending on item 10, which is a contingency holdback. Generally, the newer technologies will require a large contingency pool, while space experienced technologies will require a simpler contingency.

Launch Site Services - Services available at Kennedy Space Center (KSC) that the STS user may require include transportation, aircraft support, ground handling support equipment, office space, test equipment, calibration and technical shops. Costs are mission specific and negotiated with KSC.

Flight Planning and Operations Support - Flight planning and operations are provided as part of the standard Shuttle transportation charge. Three crew members are provided under the basic charge with up to one day of on-orbit payload operations for deploying or erecting the structural assembly. Preflight planning and training necessary for normal STS operations are included. LSS-specific training will be charged to the user. The charge also covers the preparation of a flight data file for the assembly operations.

Standard real-time support services include one or two flight controllers who will assist the user with flight plan and crew procedures changes. STS users are encouraged to use simulation facilities at the various NASA centers for pretest planning, timeline development, and hardware evaluation. These facilities include MSFC's Neutral Buoyancy Simulator (NBS) and JSC's zero-G aircraft. Costs for using these facilities are not defined.

Assembly Procedures and Checklists - Assembly diagrams, part lists, crew procedures and checklists required for the LSS assembly tasks will likely cost from $5,160 to $38,700 (FY85$) depending on the amount of paper required on-orbit. However, any assembly mode will require some supporting documentation and the cost of providing this material may be the same for the different modes.

Payload Specialist and Training - The estimated cost of $193,500 to $258,000 (FY85$) for training a payload specialist and providing him on-orbit is based on a seven day flight. This will likely depend on the complexity of the crew tasks associated with the IVA operations associated with the LSS assembly. If a trained payload specialist makes repeated flights, the cost for later flights may be reduced.

Additional Days of STS Support - Only one day of mission operations is included in the standard services to a payload. Any situation involving the need for more than one day of on-orbit time will dictate the purchase of this option. Each additional day will cost $516.000 to $774,000 (FY85$). The maximum number of days on-orbit with the current STS configuration is seven.

It is anticipated that deployable structures may be assembled in one or two days while erectible structures may take several days to assemble.

Payload Revisit - LSS assembly projects requiring more than one shuttle flight will have to pay $774,000 to $1,032,000 (FY85$) for each revisit option in addition to the other launch costs.

Payload Operations Control Center - The Payload Operations Control Center (POCC) enables the user to support real-time on-orbit operations with voice communications, video, data analysis, etc. The charge for use and services of the POCC will be based on four cost categories as follows:

1. Cost for NASA personnel required for POCC support
2. Use charge for office space, facilities and services
3. Cost for manpower and facilities to accommodate unique POCC training and simulation activities
4. Cost for specialized services such as voice transcripts, video tapes, etc.

Because of the variable nature of the POCC requirements for different types of LSS payloads and the developmental state of this cost policy by NASA for these services, specific cost estimations cannot be made.

Optional Flight Services

The STS optional flight services most likely to be required by a LSS user are Spacelab pallets, an additional RMS additional power and Orbital Maneuvering Subsystem (OMS) delta-V kits. The costs for these items are discussed below.

Experiment Pallets - LSS's with experiments mounted to the structure will likely use some type of pallet(s) experiment hardware mounting. The Spacelab pallets can be used at a cost of $3,828,720 (FY85$) each. However, these pallets may not be ideally suited for LSS applications. The cost of providing pallets of another design is dependent on the specific design.

Teledyne Brown Engineering produces a 32-inch pallet which is considerably less expensive and may have applications for some LSS operations. The short pallet is $430,000 (FY85$) without keel or trunnion fittings, which are furnished for $234,000 (FY85$).

Spacelab Pallets - Use of the pressurized Spacelab module is not anticipated for any LSS assembly mission. However, Spacelab pallets may be used for mounting column stowage containers, assembly fixtures or other deployment hardware.

The price charged a Spacelab (i.e., pallet) user will be the sum of the shuttle standard transportation flight price, the Spacelab standard operations price, any optional services required by the user, and the Spacelab use fee, if applicable. The standard costs will be fixed for the first three years of the STS operations and will be updated annually for the remaining years.

The available cost descriptions all assume the use of experiment hardware on the pallet and do not lend themselves to calculating of specific costs for LSS type payloads. However, it appears a pallet plus igloo will cost $2,296,200 (FY85$). The price for pallets without the igloo is not defined. Additionally, the use fee for each pallet is $62,952 for shared pallets, and $185,760 for dedicated pallets (FY85$).

Orbital Maneuvering Subsystem Delta-V Kit - up to three Orbital Maneuvering Subsystem (OMS) auxiliary propulsion kits can be added to the integral OMS propellant tanks. Each kit produces an additional 152 m/sec (500 ft/sec) velocity to the shuttle in orbit and could be used to deliver payloads to higher than standard orbits or to orbits beyond the standard inclination angle. The two standard orbits are:

- o 160 NMi altitude, 28.5° inclination, 29,483 kgs.
- o 160 NMi altitude, 57.0° inclination, 25,401 kgs.

The installation and removal cost for each OMS kit is $1,044,900 (FY85$). The cost of using one, two or three kits is listed below.

OMS KIT	COST - Includes Use Fee (FY85$)
1 Tank	$222,000
2 Tanks	$312,000
3 Tanks	$401,000

ORBITAL TRANSFER VEHICLES (OTVs)

The shuttle is the major vehicle in the Space Transportation System but must operate in orbits under 1,110 km. For LSS designed for geosynchronous orbits of 35,900 km, supplementary transport systems are used. Three versions of these are presently operable: PAM-A, PAM-D and the IUS.

Payload Assist Module (PAMs) are transfer vehicles designed by McDonnell Douglas. At present, the Atlas or PAM-A to boost payloads up to 2,000 kgs and the Delta or PAM-D boosts payloads up to 900 kgs into geosynchronous orbit. Each have their own cradle into which they fit during shuttle transit. An intermediary module, the PAM-D2, is currently under development and will have a 1600 kg initial capacity, growing to 1800 kgs. Flight readiness is planned for May 1985.

For the Department of Defense, TRW and Boeing have developed a 2,300 kg Inertial Upper Stage of IUS, which is deployed with the RMS. It has a 15 year life expectancy.

Fairchild has developed the concept of a space bus based on an MMS or Multi-Mission Modular Spacecraft. The basic design has already been used on the Solar Maximum Mission and Landsat 4. Leasecraft, the commercial bus, is an integral modular system having its own power propulsion communications and payload modules. It remains with the payload in a Lower Earth Orbit until it decays to the shuttle orbit where it is serviced by the RMS. Pam A & D have three additional power modules making a total of six which surround a central propulsion module. A space transport system for lease by commercial ventures which will subsidize scientific payloads. Such a system could transport fresh reels, struts, or other construction replenishments from the shuttle to a higher orbit and supply the power source necessary to integrate these into the platform. Fairchild itself plans a small platform in LEO as a business venture and would be self-sufficient in servicing it.

A first level is planned for 1986. Leasecraft would occupy only five feet of the cargo length. Once in orbit it could be controlled through the Tracking Data and Relay System, TDRS, Payload exchange is to be accomplished in part, with the aid of three motor driven jack screws, a step toward automation.

Docking Module - The optional docking module will provide a means for other orbiting vehicles to hard dock with the orbiter. The projected price for this option is $41,280 (FY85$).

Docking adaptors can be fitted to the spacecraft in order to secure a LSS and bring it within the reach envelope of the RMS. Docking of two spacecraft at a docking interface is achieved with the aid of reaction control thrusters. Interfaces on space docking adaptors, space system modules and orbital transfer vehicles should be standardized.

Optional Payload-Related Services - Optional payload-related services are specific tasks performed for the user by NASA utilizing existing capabilities. These services are outside the scope of currently defined STS services and include functions such as EVA, payload specialists and their training, additional time on-orbit and payload revisit. Unique optional services which are custom tailored to the user's specific mission needs are listed below.

Common Optional Services

OPTIONS	PRICE RANGE (FY85$)
EVA	$154,800 to $258,000 each/6 hours
Payload specialist & training	$193,500 to $258,000 each
Additional days of STS support	$516,000 to $774,000 per day
Payload revisit	$774,000 to $1,032,000 per flight*
JSC Payload Operations Control Control Center (POCC)	To be negotiated
Launch site services	
- Spacecraft optional services package	$851,400
- SSUS-D optional services package	$193,500
- SSUS-A optional services package	$219,300
- Vertical processing facility	$12,900

*Estimated incurred costs only (launch costs and other unique optional services not included).

Unique Services - Several unique payload-related optional services may be performed by NASA if the user chooses not to perform these services himself. The services most likely to be needed by a STS user and the estimated charges are listed below.

UNIQUE OPTIONAL SERVICES

OPTIONS	PRICE RANGE (FY85$)
Engineering analyses	
- Thermal loads analysis	
Initial	$ 258,000 to $ 387,000 each
Subsequent	$ 129,000 to $ 193,500 each
- Structural dynamic loads	
Shuttle models and forcing functions	$ 103,200 to $ 193,500 each
- Electromagnetic interference/ compatibility analysis	$ 51,600 to $ 129,000 each
- Special studies	To be negotiated
Data analysis and software support	
- Nonstandard inclination (dedicated) - initial	$1,032,000 to $1,548,000 each
- Nonstandard attitude - initial	$1,032,000 to $1,548,000 each
- Data software modification	$ 154,800 to $ 258,000 each
- End-to-end data tests	$ 258,000 to $1,290,000 each
Unique integration hardware	To be negotiated

3.0 PREPARE FUNCTIONAL ANALYSIS

Each LSS mission is proposed, developed and flown to accomplish one or more mission objectives, and the ones of interest in this document are the assembly objectives. How these assembly objectives are reached is the product of a series of assembly functions being performed during the mission. To determine how these assembly functions can most productively and economically be carried out is the purpose of this Large Space System Man-Machine Assembly Analysis.

The primary purpose of the mission functional analysis is to securely tie down all of the functions which need to be accomplished during an assembly. The assembly and mission functions are the elements which the analyst cannot manipulate; consequently, they must be clearly identified so that any alternatives in operations suggested by the analyst completely fulfill the functional requirements. This gives the development of the functional analysis a special importance in the MMAA in that it defines the mission more clearly than even the hardware characteristics of the mission and is the standard against which scenarios and tasks are compared.

Beginning with the overall mission objective--e.g., to orbit a large geostationary communications station--we can identify the classes of operations and activities which as a whole contribute to the system assembly objectives. These might be to deploy and orient a large antenna array or assemble and orient a large antenna array, fabricate a support beam or assemble a support beam and deploy, deploy LSS material with the remote manipulator system or deploy LSS material with MMU equipped EVA crew members. Each of these functional blocks is fairly arbitrarily defined, and certainly should be at the discretion of the analyst, for they are the "chunks" of a mission which can be moved about and appropriately repositioned without disrupting the overall assembly objective. It should be noted that the functions are classes of activities and not the specific operations themselves, as in "travel" being a functional descriptor and "go by ship" being a task descriptor. You can see that "travel" allows a lot more analytic latitude (all of your travel options are open), but it also involves more work than limiting one's self to "go by ship."

Another important aspect of functional analyses is that they are not dealing with, nor define, equipment or personnel. They are concerned with what is to be done and not who does it, nor with the particular means to accomplish it. This is an important consideration in that it precludes a premature decision concerning how a function is carried out prior to a more appropriate analysis, such as task or cost analysis. A brief functional block diagram is given below as an example.

First Level Functional Analysis
Large Space Systems
Mission Objective: Emplace Geostationary Communications Platform

1.0 Prepare Structure Components for GEO Insertion	2.0 Deliver Structure Components to GEO	3.0 Deploy/Assemble Structure Components
4.0 Prepare Payload Components for GEO Insertion	5.0 Deliver Payload Components to Structure	6.0 Rendezvous with Structure
7.0 Mate Payload with Structure	8.0 Connect Payload Utilities to Structure Power Supply	9.0 Activate/Check-out Payload

These blocks represent very large chunks of mission activities arranged in chronological order. The details of the first level functional analysis can be broken out in second and third level analyses or to whatever level of detail is required by the particular mission, but the same caution concerning attention to the "what is to be done" is in order without defining who or what accomplishes the activity. The assignment of roles for specific tasks comes during the preparation of task descriptions discussed in Section 5.0.

If we wish to take the functional analysis to a greater degree of detail, we can do so by treating any functional block as an end item and then defining the functional elements needed to satisfy that new end item. A second level functional analysis using 7.0, Mate Payload with Structure, is shown in the example that follows.

Second Level Functional Analysis
Large Space Systems
Mission Objective: Emplace Geostationary Communications Platform
Function Objective: 7.0, Mate Payload with Structure

7.1 Unstow Payload	7.2 Perform System Checkout	7.3 Deploy Payload
7.4 Transport Payload to Structure	7.5 Orient Payload w/ Mating Device	7.6 Attach Payload to Structure
7.7 Demate Payload & Transporter	7.8 Perform System Checkout on Payload	

As the blocks come to represent smaller and smaller units of work, we can begin to get a clear picture of what functions have to be satisfied and in what order these functions must be accomplished. This leads to the development of the detailed assembly scenarios in which we can review assembly options while still satisfying the mission functional objectives.

4.0 PREPARE ASSEMBLY SCENARIO

This is the point at which the analyst's knowledge of the assembly options, the STS capabilities, the mission objectives, and the LSS concept being studied comes together. It is the focal point for exploring the available alternatives in packaging, delivery, deployment, fabrication, assembly, and payload attachment. This is also the point at which the MMAA departs from conventional costing algorithms, engineering analyses, and structural assessments. For the assembly scenarios are not developed to drive out a dependent measure for a fixed structure, but rather to employ "what if" strategies for several configurations of a structure and hopefully yield more productive and more economical assembly approaches. A recent example from LSS simulations conducted at MSFC will help to illustrate this point.

Using precut lengths of automated beam builder (ABB) triangular beams, two A7LB suited subjects were required to assembly a large space structure mockup across the Orbiter bay. The objective of the task was to test for man/system performance differences in two types of structural attachments used to assemble the structure. Figure 4-1 shows the completed structure as it was assembled in the Neutral Buoyancy Simulator (NBS). Obvious questions of procedure arose during assembly, such as:

- What is the role of the SRMS?
- Shall the test subjects work together or on their own special tasks?
- What are the optimum translation paths?
- What is the task order?

and similar questions. During one step of the operations it was necessary to have a subject on each side of the shuttle bay followed by a step which required they both be on the same side of the bay (Figure 4-2). From the preliminary assembly scenario, it was proposed that Subject 1 move across the bay to the new location and Subject 2 remain at his workstation. This was accomplished in about 200 seconds as shown in the heavy, dark translation route in the figure. It was later suggested that a shorter translation route was a diagonal path across the structure, although this route did not afford handholds and would presumably require MMU support. This would save approximately one minute in the structure assembly process, but even greater savings can be obtained by having both crew members simultaneously move to new stations as shown by the dashed routing lines. Since the translation is repeated over and over again during the assembly of this LSS concept, the savings become multiples of the 100 seconds.

This simulation example points out the flexibility of the MMAA--in that several assembly alternatives can be reviewed prior to defining assembly tasks. The objective is to work toward a minimum time, maximum productivity assembly scenario which maintains the sanctity of the mission functional objectives.

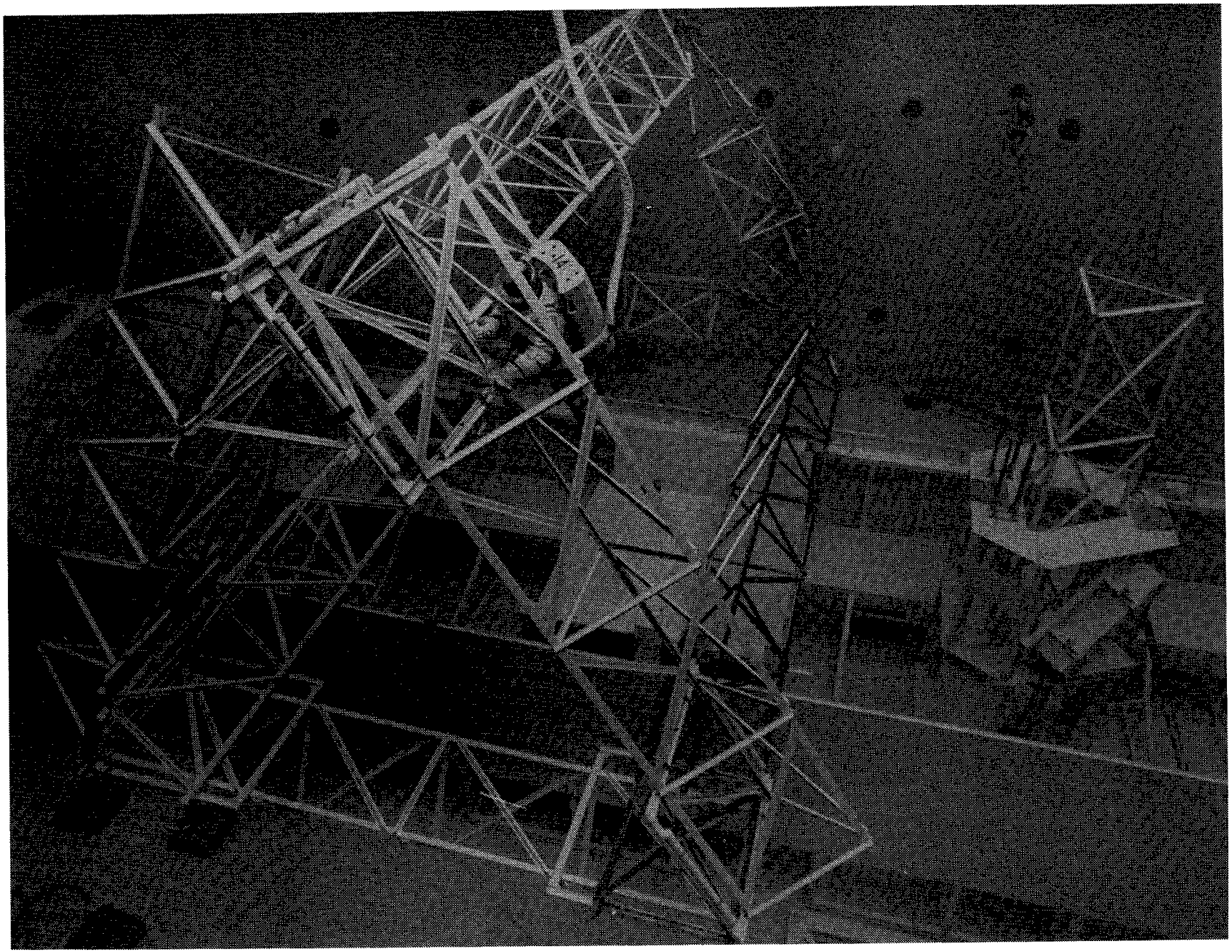

Figure 4-1: EVA Subjects Completing 9-Beam Large Space Structure

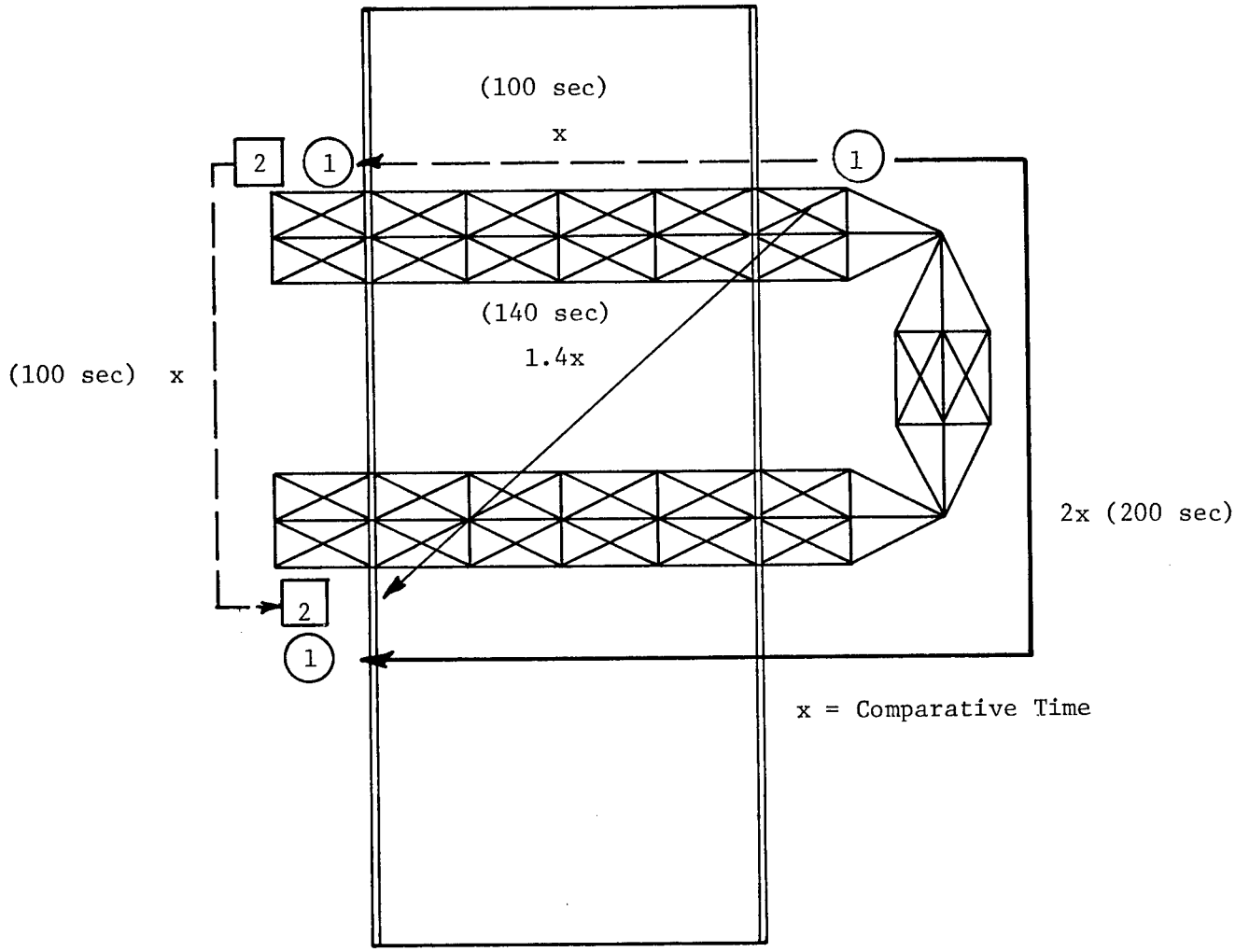

Figure 4-2: EVA Time and Motion Assembly Analysis

The purpose of the simulation was to make sure that the LSS assembly was being accomplished with the most productive use of EVA time. By developing different translation routes, we have reduced the task assembly time, reduced EVA idle time for one EVA crew member, and permitted the EVA crew to translate about the structure without the aid of the MMU. The net result will be an increase in production rate and reduction in direct and support costs.

The variables of interest at this point will be gross times, idle times, support requirements, probability of success/failure, labor requirements and similar large variables like rates of assembly throughout the scenario. Detailed task variables are to be identified in the development of the task descriptions.

Similar savings can be realized by changing the flight packaging plan for LSS structures, with the potential for reducing the required number of flights, or for recommending engineering design changes to take advantage of automated systems which can continue assembly or fabrication operations between shuttle missions. The objective of the several assembly scenarios is to take full advantage of the weight, volume and on-orbit capabilities of the shuttle and to identify potential engineering concepts which meet these capabilities.

4.1 MANUAL ASSEMBLY SCENARIO

The first assembly path we want to explore is assembly using EVA. This is based on the fact that we have data from previous missions on the capability of EVA and on the safety and productivity limits of EVA. The constraints of EVA are principally that two EVA crew members can work only for a period of six hours per day on LSS assembly tasks and that all LSS equipment must be EVA-compatible based upon MSFC-STD-512A, "Man/System Requirements for Weightless Environments," and JSC 10615, "Shuttle EVA Description and EVA Criteria." Using the Data Base A and the description of the LSS components packaged with a shuttle flight, we can work through an assembly scenario using only EVA methods. This will enable us to see what assembly steps are easily accomplished by EVA, which ones need additional support and which steps are not feasible for EVA. For example:

TASK	TIME OR OTHER MEASURE
0. EVA Preparation	sec
1. Egress Airlock	sec
2. Translate to Workstation	sec/m
3. Ingress Workstation (foot/leg restraints)	sec
4. Unlock Assembly Components	sec/forces
5. Deploy Assembly Components	sec/forces
6. Orient Assembly Components	sec/stability requirements
7. Install Mating Elements	sec/tolerances
8. Mate Assembly Components	sec/forces/tolerances
9. Install Components in Assembly Fixture	sec/tolerances
10. Deploy Utility Subsystem	sec/forces
11. Install Structure Utilities	sec/m
12. Mate Utility Unions	sec/forces/tolerances
13. Deploy LSS Experiment Packages	sec/forces
14. Orient Experiment Packages	sec/forces/feedback
15. Align Experiment Packages	sec/tolerances/feedback
16. Mate Experiment Packages	sec/tolerances/forces.

These steps might reflect the tasks and criteria for assembling a simple LSS with a powered experiment module. As each step in the assembly scenario is addressed, we can determine approximate time to complete, forces and torques required, special EVA actions such as orientation and stabilization, tolerances, and similar dependent measures. Where total time exceeds six hours of operating time, we know we must reevaluate our assembly approach. Where forces and torques exceed EVA capability, we know we must provide tools or other support. Where tolerances are too fine for EVA operations, we know we may suggest engineering changes in the mating or assembly equipment. Where LSS components exceed masses which can be adequately controlled and managed by EVA crew members or where LSS components cannot be made compatible with EVA requirements, then we must assign alternative assembly techniques to these portions of the assembly scenario.

4.2 REMOTE ASSEMBLY SCENARIO

The next assembly path we may want to explore involves remote operations, since some potentially applicable remote systems are part of the shuttle's standard services, i.e., the shuttle remote manipulator system (SRMS). An end-to-end assembly scenario should be developed which is totally remote so that we can identify tasks which are particularly appropriate to remote manipulation, and those which exceed current remote systems capabilities. This will yield a better understanding of what roles remote assembly should play versus what tasks should be allocated to some other assembly mode and it will also drive out technology needs in the area of remote assembly applications.

An example of remote assembly of a LSS with an experiment module is as follows:

TASK	MEASURE
1. Activate SRMS	
2. Unstow SRMS from Launch Brackets	
3. Position and Orient SRMS with Respect to LSS Component Stowage Rack	stability/feedback/sec
4. Release Locks on LSS Components	tolerance forces/torques/sec
5. Orient SRMS with Respect to LSS Components	stability/feedback/sec
6. Capture Probe	sec/feedback
7. Deploy LSS Components	sec/stability
8. Translate LSS Component	sec/accuracy
9. Orient and Position Component in Assembly Fixture	sec/accuracy/stability
10. Release Probe	sec/feedback
11. Reposition SRMS to #3 and Repair	sec/accuracy
12. Position and Orient SRMS with Respect to Utilities Assembly	sec/stability
13. Grasp Utilities Assembly	sec/accuracy
14. Deploy Utilities Assembly	sec/forces
15. Move to Structure, Orient	sec/stability/feedback
16. Attach Utilities to Structure	sec/accuracy/feedback
17. Connect Utilities	sec/accuracy/feedback
18. Move to Experiment Package	sec/stability
19. Orient, Grasp Experiment Package	sec/accuracy
20. Deploy Package	sec/forces
21. Move to Structure, Orient	sec/accuracy
22. Connect Experiment Package to Structure	sec/accuracy/forces/ feedback
23. Stow SRMS	sec/automatic.

There are more demands being placed on the remote system since the decision maker/operator is now removed from the immediate task site. There are requirements of accuracy, stability, feedback and operations sensing which must be built into the RMS and LSS equipment to provide the operator with sufficient information and latitude to successfully complete the assembly tasks.

With the replacement of the operator at the worksite with the SRMS, we have reduced the risks inherent in EVA, made it feasible to move and control larger masses, and enlarged the working envelope around the shuttle bay. By employing the SRMS we can expect an increase in available operating time over manual modes since comparatively little time is involved in preparation for operations. Also, it is possible to operate more than one shift per day. It is possible for dedicated remote assembly missions to be designed for 24 hour a day operation if required. This increased time-on-assembly compensates for generally lower rates of assembly involved in remote systems.

Again, as was the case with the manual assembly mode, we want to proceed from start to finish with an assembly scenario totally carried out by remote systems. This enables us to identify those sequences well suited for remote operations and those which exceed remote capabilities and require additional technological capability or a different assembly approach.

At this point in the development of the assembly scenarios, we have two parallel paths to accomplish the same assembly objectives and we have identified sequences within those paths which are strong candidates for a particular assembly mode. It is possible to review these two paths and see the areas of potential cooperation between manual and remote assembly modes which would yield a more productive, more economical mode of LSS assembly. But before we formally develop this combination, we need to work through an assembly scenario which is totally automated in operation.

4.3 AUTOMATED ASSEMBLY SCENARIO

Fully automated assembly operations require a significant progress in space technology before we can start to build a valid data base from on-orbit and ground based demonstrations. However, much research is ongoing in the development of earth-based automated assembly systems and as this technology develops and space-based proof of concept demonstrations are initiated, it is envisioned that automated systems will become the preferred assembly mode by reason of safety, productivity and economics. Evidence for this position is found in automated medical laboratory testing, parts inspection and quality control, welding and spray painting operations on assembly lines, and electronic component assembly. Additionally, as of 1980, approximately 3% of existing automated systems were designed to accomplish assembly tasks, but 40% of the long range orders for robots were for assembly systems. This indicates the developing importance of automated assembly systems and why we should strongly consider this assembly option for LSS assembly tasks.

Automated systems will carry the burden of research and development costs, but autonomy of operation and rates of assembly productivity per 24 hour period should recoup these costs during the operating life cycle of the automated system.

The typical LSS example which we have been using for the development of manual and remote assembly scenarios which involves a structure, utilities and an experiment package, could be automatically assembled as follows:

TASK	MEASURE
1. Preparation for Automated System Deployment o Open bay doors o Unstow/deploy SRMS	
2. Activate Automated Assembler o Power on o Instrumentation check	go/no go
3. Grapple Assembler with SRMS	sec/accuracy
4. Release Launch Restraints on Assembler	sec/from AFD
5. Deploy Assembler from Bay	sec/stability
6. Complete Systems/Functions Test on Assembler	go/no go
7. Release Assembler and Stow SRMS	sec/forces/ stability
8. Shuttle Retreats or Assembler Thrusts into Assigned Orbit Position	sec/accuracy
9. Automatic Assembly Procedure Initiated	go/no go

With the assembler operating away from the Orbiter, the question of materials resupply must be addressed. One option is to have a resupply teleoperator shuttle materials from a storage area to the assembler. The two vehicles--teleoperator and assembler--would mate and the transfer of materials and resupply of any consumables would be accomplished. Another option would be to have all stock materials delivered to the appropriate orbit as part of the assembler payload. Since one of the shuttle payload constraints is weight, the integration of assembler and materials could be accomplished as a single payload element.

The employment of either option would depend upon the specific mission, but once in orbit with material, the assembler would proceed with the structures assembly on an automatic basis with failsafe systems and self- diagnosis of problems as part of the assembler package. The assembly operation would then only require monitoring or supervision by a human to assure that all assembly operations were proceeding according to schedule.

The advantage of a free flying assembler is that it can proceed with assembly activity in the absence of shuttle support, but there are proposals for automated assemblers which are deployed in the shuttle bay and operate directly from the shuttle. The shuttle serves as a storage and utilities platform for the assembler, and the assembled structure is built out from the payload bay.

An automated assembly scenario which retains the assembler in the payload bay would include some of the following elements:

	TASK	MEASURE
1.	Preparation for Automated Assembler Activation o Open bay doors o Unstow/deploy SRMS	
2.	Activate Automated Assembler o Power on o System checkout	go/no go
3.	Position and Orient Assembler in Work Attitude o With SRMS o Or, on tilt work platform	sec/accuracy
4.	Secure Assembler in Work Attitude	go/no go
5.	Complete Systems/Functions Test on Assembler	go/no go
6.	Begin Production and Assembly of LSS	
7.	LSS Assembly Proceeds at a Given Production Rate for the Particular Assembler Until the Stock Material Is Expended	sec/failures
8.	Deactivate Assembler	
9.	Return Assembler to Stowed Position and Lock Down Launch Restraints	sec/accuracy

The advantages of having an automated assembler in the payload bay are:

- o Having the SRMS available to support operations
- o Utilities and consumables derived from the Orbiter
- o Potential for EVA assistance/repair
- o Proximate supervision of operations and immediate system performance feedback to the AFD.

The disadvantages of having an automated assembler in the payload bay are:

- o Restricted working envelope for deploying structural elements
- o Limited on-orbit time
- o Cost of maintaining shuttle in orbit to provide services to the assembler
- o Potential for inadvertent damage to shuttle by automated system.

For both free flying and attached concepts of automated assembly, it has been assumed that the structure's utility system has been designed as an integral part of the structure and the assembly process. When not so designed, the following steps will be required in the automated assembly scenario:

TASK	MEASURE
1. Unstow Utilities Package	sec/accuracy
2. Mate Utilities to the LSS and Route Utilities	sec/accuracy/ stability/feedback
3. Unstow the Experiment Package	sec/forces/torque
4. Mate Experiment Package to LSS	sec/accuracy/ stability/feedback
5. Experiment Activation and Checkout	go/no go

Now that we have outlined three distinct modes for assembly, we can check to see what steps present technological problems or production or safety problems, and we can begin to derive an assembly approach which combines the best elements of each assembly path while reducing problems, costs, times, etc.

The assembly scenarios developed at this point represent the broadest definition of structural assembly for a particular assembly. The details of assembly are taken up in the task descriptions of assembly. It is at this task level that discrete activities are assigned to man and machine for operational responsibility.

An example assembly scenario from the Advanced Science Applications Space Platform (SASP) is presented below for a remote assembly operation. This example is based on combined manual and remote assembly operations. Times for <u>either</u> mode alone were found to be three to four times greater.

ASSEMBLY SCENARIO FOR THE ADVANCED SCIENCE APPLICATION SPACE PLATFORM (SASP)

ITEM	MMAA FUNCTION
1.0 <u>Description of Structure and Components</u> "T" shaped basic structure (160 m x 82 m) Box shaped strongback sections form "T" and two diagonal braces Two shuttle berthing interfaces Construction platform Construction module with manipulator Scientific berthing stations (5) Ku band antennas (2) Propulsion module 50 kw power system Four experiments proposed (not considered as part of LSS)	Serves as a consolidated descriptin of the LSS mission hardware. Required to establish the orbital system baseline, which should not change as the assembly scenarios are developed. See Figure 4-3.

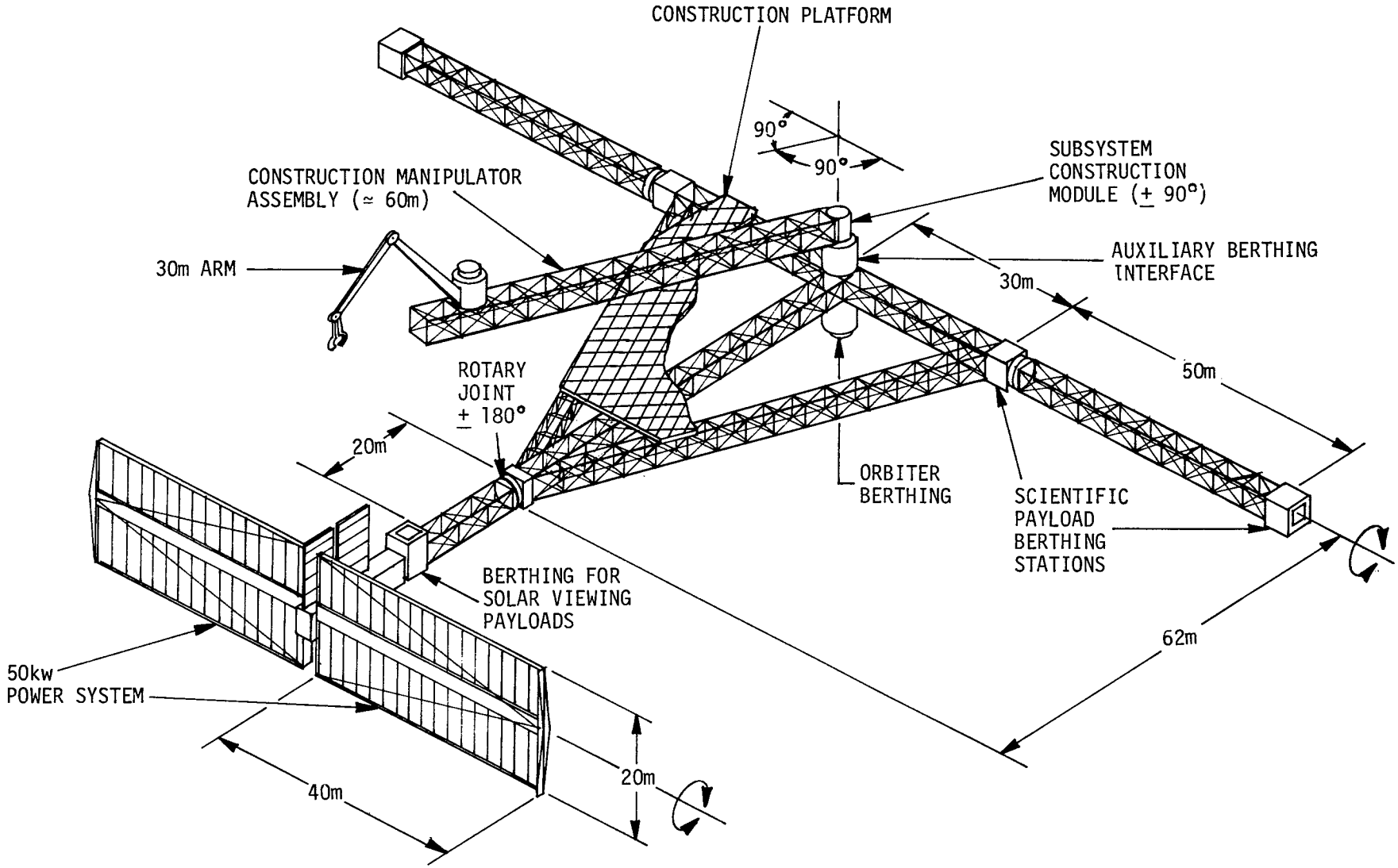

Figure 4-3: Advanced SASP

ITEM	MMAA FUNCTION
2.0 Assumptions:	
1. Box beams used as the primary triangulated "T" structure are 3 m on a side and fold to 3/4 m square cross section. They do not compress longitudinally. 2. Sections up to 3 bays long can be carried in the cargo bay (45 ft.). 3. Three-bay sections are joined using an "end-to-end box joint." 4. Rotary joints, payload berthing stations, and Orbiter berthing interfaces have built-in attachment joints. 5. The two triangulating elements are joined to the basic "T" structure with "angle joints." 6. Construction platform is 13,000 ft.^{2}, constructed of 120 prefabricated columns each 15 ft. long. 7. Manipulator control capsule with 30 m arm is available for operation after Flight 1. 8. EVA required for operation of 30 m manipulator from control capsule. 9. Manipulator capsule is attached using the auxiliary berthinf station immediately aft of the 50 kw power system. 10. RMS available for supporting construction manipulator.	Compliments 1.0 where firm data are not available. Serves to document any variations between assembly alternatives.
3.0 Shuttle Packaging Plan Flight — Cargo 1 — 50 kw power system 50 kw berthing interface 2 3-bay sections Rotary joint 3 end-to-end box joints Construction module/ aux berthing station Construction manipulator and boom 2 2-bay angle box joints	Used to demonstrate that structure components do not exceed Shuttle capability, while most effectively using the capacity of the Shuttle.

3.0 Shuttle Packaging Plan (Con't.)

Flight	Cargo
2	Orbiter berthing station
	2 1-bay angle box joints
	3 2-bay sections
	12 3-bay sections
	12 end-to-end joints
3	4 scientific payload stations
	6 3-bay sections
	4 end-to-end joints
	1 propulsion module
	2 rotary joints
	Construction platform columns & joints

4.0 Major Assembly Steps

Flight 1:

	Operations	Potential Mode	Est. Time
o	Deploy 50 kw power system	RMS EVA/MMU	25 min 18 min
o	Deploy/attach berthing station to 50 kw power system	RMS EVA/MMU	20 min
o	Deploy aux berthing module/attach to solar viewing station	RMS EVA/MMU	60 min
o	Deploy/attach construction boom to aux berthing station	RMS EVA/MMU	85 min
o	Deploy/attach construction module to construction boom	RMS EVA/MMU	55 min
o	Deploy 30m arm to construction module	RMS EVA/MMU	45 min
o	Deploy/attach 3-bay section to 50 kw berthing station	30m/RMS/EVA	10 min
o	Deploy/attach rotary joint to 3-bay section	30m/RMS/EVA	15 min
o	Deploy/attach #2, 3-bay to rotary joint	30m/RMS/EVA	10 min
o	Deploy/attach 2, 2-bay angle joints to port and starboard #2, 3-bay	30m/RMS/EVA	20 min
o	Deploy/attach 3 end-to-end joints to beam ends	30m/RMS/EVA	15 min
			360 min

Flight 2:

	Operations	Potential Mode	Est. Time
o	Deploy/attach #1, 3-bay #1 end-to-end, #2, 3-bay, #2 end-to-end and #1, 2-bay to center beam	30m/RMS	45 min
o	Deploy/attach 4, 3-bays and 4 end-to-end joints for port diagonal boom	30m/RMS	65 min
o	Deploy/attach 4, 3-bays and 4 end-to-end joints for starboard diagonal boom	30m/RMS	65 min
o	Deploy/attach 1, 2-bay, 1 end-to-end joint and 1, 3-bay to port of center boom	30m/RMS	25 min
o	Deploy/attach 1, 2-bay 1 end-to-end joint and 1, 3-bay to starboard of center boom	30m/RMS	25 min
o	Deploy/attach angle joint at port junction of diagonal and "T" boom	30m/RMS	10 min
o	Deploy/attach angle joint at starboard junction of diagonal and "T" boom	30m/RMS	10 min
o	Deploy/attach Orbiter berthing station at "T" intersection	30m/RMS	50 min
o	Reposition aux berthing station at "T" intersection	30m/RMS	60 min
			335 min

Flight 3:

	Operations	Potential Mode	Est. Time
o	Deploy/attach starboard payload berthing station to end of "T" beam	RMS/30m	25 min
o	Deploy/attach port payload berthing station to end of "T" boom	RMS/30m	25 min
o	Deploy/attach rotary joint, 3, 3-bays and 2 end-to-end joints to port berthing station	RMS/30m	80 min
o	Deploy/attach rotary joint, 3, 3-bays and 2 end-to-end joints to starboard berthing station	RMS/30m	80 min
o	Deploy/attach end port beam scientific payload station	RMS/30m	25 min
o	Deploy/attach end starboard boom scientific payload station	RMS/30m	25 min
o	Deploy attach propulsion mode	RMS/30m	30 min
o	Deploy/secure construction platform columns and joints to beams	RMS/30m	70 min
			360 min

2nd Day

Assemble construction platform	RMS/EVA/MMU/ 30m	360 min

Table 4-1: LSS Assembly Cost Estimating Work Sheet

ALTERNATE/3 FLIGHT SCENARIO REMOTE

COST ELEMENTS	COST (FY85$)
1.0 FLIGHT OPERATIONS	
- Standard Flight Charge	
• Transportation Charge (3 Flights) . . .	$139,320,000
• Use Fee	0
- Optional Flight Services	
• Spacelab Pallets	0
• Additional RMS	0
• OMS Delta-V Kit	0
- Optional Payload-Related Services	
• EVA (Includes MMU)	1,548,000
• Payload Specialist & Training	258,000
• Additional Days On-Orbit	903,000
• Payload Revisit	774,000
• POCC	0
• Launch Site Services	0
2.0 LABOR (Covered in charges for EVA, Payload Specialist & POCC)	
3.0 CREW SUPPORT EQUIPMENT	
- EVA Crew Aids	
• Handrails	90,300
• Foot Restraints	25,800
• Tethers	12,900
• Lights	0
• Cameras & Monitors	0
• Portable Work Stations	0
- EVA Tools	
• Powered	0
• Manual	0
- Procedures & Checklists	25,800

Table 4-1: LSS Assembly Cost Estimating Work Sheet (Con't.)

(ALTERNATE/3 FLIGHT SCENARIO REMOTE)

COST ELEMENTS	COST (FY85$)
4.0 LSS EQUIPMENT	
- Special MMU Beam Handler	$1,935,000
- Beams & Columns*.	0
- Joints & Unions*.	0
- Assy. Jigs & Fixtures*.	0
- Assy. Aids & Tools*	0
- Special RMS End Effector	3,800,000
- Automated Devices	0
- Automated Device Materials	0
- Remote System Launch & Return	0
- Remote System Communications	0
- Remote System Ground Support	0
- Remote System Use Cost	0
- Remote System R&D Cost	0
- Remote System Production Cost	0
	0
TOTAL ASSEMBLY COST	$150,040,000 (FY85$)

*Include if costs are unequal for various assembly modes.

5.0 PREPARE CANDIDATE TASK DESCRIPTIONS

The development of the Man/Machine Assembly Analysis to the point where we have a justifiable basis for allocating specific activities to specific system components leads us to the execution of the test descriptions. The task descriptions are the most detailed level of the assembly analysis and tie the user, the hardware, the software and the functional objectives together in such a manner as will accomplish the mission objective. The test description further serves to assign roles and responsibilities within the system assembly definition.

The significant difference within the MMAA task description versus convenience task descriptions is that we have the three alternate assembly modes (paths)--manual, remote and automated--on which to base the tasks. The analyst is free to complete the task description through each path or to be selective among the three paths, taking blocks of activities from the most appropriate path based on an assessment of the functional analysis flow developed in 3.0.

5.1 TASK FLOW WORKSHEETS

Some advantages can be gained by completing a task flow which provides a general timeline of activities for a particular flight. Table 5-1 shows a chronological flow of work for a third flight in the assembly of the ASASP. While not necessary prior to completing the task descriptions, for complex missions it provides a simple means for keeping track of a great deal of information.

5.2 TASK DESCRIPTION WORKSHEETS

In order to organize the task information into a useful format, one that identifies who does what, with which and at what time, the analyst will find it helpful to have a task description worksheet. The particular format is not critical but the information requirements are. Each task description should contain the following:

- <u>Function Heading</u> - a major title which identifies the functional objective addressed by the task

- <u>Task Name</u> - the identity of the task and the classified for all related subtasks

- <u>Subtask</u> - the specific activity being undertaken. This is the most detailed description of an activity and may not be appropriate in all cases of analysis.

- <u>Task Cue</u> - identifies the activity which occurs immediately <u>before</u> this required task and serves as a stimulus for task initiation

- <u>Required Action</u> - the behavior required to complete the task

Table 5-1: Task Flow Worksheets

Flight 3, Assembly of ASASP

1. Flight Number 3 berths at Orbiter interface module (OIM) at head of vertical "T" section.

	Operation	Mode	Est. Time
2.	Cargo bay doors open	Auto on CMD	
3.	RMS controlled from aft flight deck control station:	RMS Operator	
	Unlock		
	Unstow		
4.	EVA crew member egresses airlock	EVA	
	Translates to cab via construction module beam		15 min
	Ingress to cab		
	C/O 30m arm, position 30m		10 min
5.	RMS grapples #1 angled box joint	RMS	
	Release #1 angled box joint	Auto	10 min
	Unstow	RMS	
	Handoff to 30m	RMS/30m	
6.	30m translates along beam to position angled box joint aft of vertical structure rotary joint	Cab/30m	6.5 min
7.	Attach angle box joint to vertical structure, port beam	30m	5 min
	Translate to pickup station	Cab/30m	6.5 min
8.	Grapple #1, end-to-end joint	RMS	While 6 & 7 are in progress (8 min)
	Release #1, end-to-end	Auto	
	Unstow	RMS	
	Handoff to 30m	RMS/30m	2 min
9.	Translate #1, end-to-end to construction platform beam angle box joint	30m	6 min
	Attach		5 min
	Translate to pickup station		6 min
10.	Grapple #1, 3-bay structure	RMS	While 9 is in progress (8 min)
	Release #1, 3 bay	Auto	
	Unstow	RMS	
	Handoff to 30m	Rms/30m	2 min

Table 5-1: Task Flow Worksheets (Con't.)

	Operation	Mode	Est. Time
11.	Translate and attach #1, 3 bay to construction platform beam	Cab/30m	Trans. 6 min Attach 5 min
	Translate to pickup station	30m	6 min
12.	Grapple #2 end-to-end joint	RMS	During 11
	Release	Auto	
	Unstow		
	Handoff to 30m		
13.	Translate #2 end-to-end joint to construction beam #1 bay	30m	5.5 min
	Attach		
	Translate to pickup station		5 min
14.	Grapple #2, 3-bay structure	RMS	During 13
	Release	Auto	
	Unstow	RMS	
	Handoff to 30m	RMS/30m	2 min
15.	Translate #2, 3-bay to #2 end joint	30m	5.5 min
	Attach		5 min
	Translate to pickup station		5.5 min
16.	Grapple #3 end-to-end joint	RMS	During 15
	Release	Auto	
	Unstow	RMS	
	Handoff to 30m	RMS/30m	
17.	Translate #3 end-to-end joint to construction beam #2 gay	30m	5 min
	Attach		5 min
	Translate to pickup station		5 min
18.	Grapple #3, 3-bay structure	RMS	During 17
	Release	Auto	
	Unstow	RMS	
	Handoff to 30m	RMS/30m	2 min
19.	Translate #3, 3-bay to #3 end joint	30m	5 min
	Attach		5 min
	Translate to pickup station		5 min
20.	Grapple #4 end-to-end joint	RMS	During 19
	Release	Auto	
	Unstow	RMS	
	Handoff to 30m	RMS/30m	2 min

Table 5-1: Task Flow Worksheets (Con't.)

	Operations	Mode	Est. Time
21.	Translate #4 end-to-end joint to construction beam #3 bay	30m	4.5 min
	Attach		5 min
	Translate to pickup station		4.5 min
22.	Grapple #4, 3-bay structure	RMS	During 21
	Release	Auto	
	Unstow	RMS	
	Handoff to 30m	RMS/30m	
23.	Translate #4, 3-bay structure to #4 end joint	30m	4.5 min
	Attach		5 min
	Translate to pickup station		4.5 min
24.	Grapple #5 end-to-end joint	RMS	During 23
	Release	Auto	
	Unstow	RMS	
	Handoff to 30m	RMS/30m	2 min
25.	Translate #5 end joint to construction beam #4 bay	30m	4 min
	Attach		5 min
	Translate to pickup station		4 min
26.	Grapple #2 angled box joint	RMS	During 25
	Release	Auto	
	Unstow	RMS	
	Handoff to 30m	RMS/30m	2 min
27.	Translate #2 angled joint to position between #5 end-to-end and the port side "T" extension immediately inboard of the rotary joint	30m	4 min
	Attach to #5 end-to-end		5 min
	Attach to port side "T" extension		10 min
	Translate to pickup station		4 min
TIME TO COMPLETE PORT CONSTRUCTION BEAM			233 min
	Repeat #5-#27 for starboard construction beam		
TIME TO COMPLETE STARBOARD BEAM			208 min

Table 5-1: Task Flow Worksheets (Cont'd.)

	Operation	Mode	Est. Time
28.	Stow 30m arm; secure construction cab	EVA	10 min
29.	EVA crew egress cab Translates to airlock via beam Ingress to airlock	EVA	15 min
		TOTAL ESTIMATED TIME 7.77 hours	466 min

Once the construction platform beams are installed, placement of the construction platform columns and joints can begin which will complete the construction platform. Due to the requirements for joining columns and joints prior to assembly, and the terminal accuracy required for mating joints, remote operations are not currently being considered.

TOTAL PLATFORM CONSTRUCTION TIME UTILIZING EVA/RMS/MMU 10.0 hours	600 min

- Feedback - the indication that the task has/has not been successfully accomplished

- Potential Errors/Failures - identifies the probable sources of task error/task failure

- Task Time - is simply the designed time to successfully complete the task. More complex times can be generated such as mean times, necessary versus allowable times, time range, etc.

- Task Criticality - identifies pivotal tasks on which mission or functional success depends. A degree of criticality can be assigned to tasks based on a probability model if this will help with the assembly analysis.

- Task Classification - identifies mode (manual, remote or automated) being employed to accomplish the task and what component task is assigned to human, human/machine, machine system. The specific human or machine components (i.e., teleoperator servicing system, operated by mission specialist at aft flight deck) can also be identified to aid in task definition.

- Task Output Interaction - the output of each task may interact with one or more tasks in the system. The identity of these interactions will provide the task cue for the next task descriptions. We can proceed with this cycle until we successfully accomplish the functional objective.

It is recognized that for advanced technologies and concepts beyond the current state-of-the-art, complete task descriptions will be difficult to obtain. However, the analyst can use these "blanks" in the assembly analysis to identify nontechnology requirements and advanced procedure requirements which can serve as the initiative for new concept studies.

An example task description worksheet is presented in Figure 5-1, but system requirements might indicate a more or less detailed sheet which can be developed by the assembly analyst. Figure 5-2 shows a task description from a hypothetical mission involving RMS/EVA deploying an experiment module.

A means of comparing tasks carried out by one of the three assembly alternatives is to use the task descriptions and assign an appropriate dependent measure to each task element. As each task worksheet is proposed for each assembly mode, the separate tasks can be transferred to a comparative worksheet such as Figure 5-2.

1. FUNCTION/FUNCTION HEADING: XYZ Module Installation on Platform

2. TASK NAME (CODE NUMBER) Grapple XYZ Experiment Module with RMS

2Δ SUBTASKS (CODE NUMBER) Activate RMS, Release Module Lockdowns

3 TASK CUE	4 REQUIRED ACTION	5 FEEDBACK	6 POTENTIAL ERRORS/ FAILURES	7 TASK TIMES	8 TASK CRITICAL	9 TASK CLASSIFICATION	10 OUTPUT INTERACTION
3.1 RMS verified ready at display station	4.1 Command RMS to EXP mod, orient and grapple	5.1 Direct and TV - visual console indicator lights	6.1 RMS failure, positioning error contact with other payloads	7.1 68 secs	8.1 High	9.1 RMS operator, primary operation - remote mode	10.1 Ready to deploy exper-iment module
3.2 EXP module verified released in bay hold down	4.2 EVA inspect exp. module, and verify to RMS operator that module is ready to be grappled	5.2 Visual and voice communication	6.2 EVA fails to detect failed hold down latch	7.2 15 secs	8.2 Moderate	9.2 EVA crew, secondary operation in support of RMS operator - manual mode	10.2 Ready to secure exp. module launch fixture

Figure 5-1: Example Task Description

	COMPARATIVE DEPENDENT MEASURES		
TASK/ASSEMBLY ELEMENT	MANUAL	REMOTE	AUTOMATED

Figure 5-2: Assembly Alternatives - Comparative Worksheet

6.0 REFERENCES

1. McDonnell Douglas Corporation: Mid-term Briefing: Conceptual Design Study Science and Applications Space Platform (SASP). Report Number MDC 68295. McDonnell Douglas Corporation, Huntington Beach, California, 1980.

2. Pruett, E.C., Kirkpatrick, M., Malone, T.B. and Shields, N.L., Jr. Development and verification of Shuttle payload extravehicular activity (EVA) requirements, Report Number H-76-4. Essex Corporation, Alexandria, Virginia, under Contract NAS8-31454, March 1976.

3. Brye, R.G., Henderson, D.E., Pruett, E.C., Shields, N.L., Jr., and Slaughter, P.H. Earth orbital teleoperator systems evaluation, 1977 year end report. Essex Corporation, Alexandria, Virginia, January 1978.

4. Roebuck, J.: Shuttle Considerations for the Design of Large Space Systems. NASA Contractor Report 60861. Rockwell International, Downey, California, 1980.

5. Bertsche, W., et. al.: Operator Performance in Undersea Manipulator Systems: Studies of Control Performance with Visual Force Feedback, Final Report. Report Number WHO 1069-6. Woods Hole Oceanographic Institution, Woods Hole, Massachusetts, 1977.

6. Miller, J.: Looking at Regenerative Systems. In Astronautics and Aeronautics, Pages 38-41. American Institute of Astronautics and Aeronautics, New York, March, 1983.

7. Olstad, W.: Targeting Space Station Technologies. In Astronautics and Aeronautics, Pages 28-32. American Institute of Astronautics and Aeronautics, New York, March 1983.

8. Scott, W.: Electronic Displays Dominating Designs. In Aviation Week and Space Technology, Pages 231-235. McGraw Hill, New York, March 14, 1983.

9. European Space Agency: Spacelab Payload Accommodation Handbook. Report Number SLP/2104. European Space Agency/National Aeronautic and Space Administration, Marshall Space Flight Center, Alabama, 1978.

10. National Aeronautics and Space Administration, Johnson Space Center: FUR 342. Report of PDP/REM Deployment and Berthing Evaluation.

11. National Aeronautics and Space Administration, Johnson Space Center: FUR 309. Report of the Definition of the PAS-01, Berthing Aids for STS-7. Document EW5-81-138M, 1981.

12. National Aeronautics and Space Administration, Johnson Space Center: FUR 339. Report of IECM, REM Deployment, Berthing Evaluation, 1981.

13. SPAR, Quick Look Report on STS-2 Flight Data. Spar Aerospace, Ontario, Canada, 1981.

14. Brye, R.G., Frederick, P.N., Kirkpatrick, M. and Shields, N.L., Jr. Earth orbital teleoperator manipulator system evaluation program, Report Number 4. Essex Corporation, Alexandria, Virginia, January 1977.

15. Shields, N.L., Jr., Kirkpatrick, M. and Malone, T.B. Manipulator evaluation criteria. Proceedings of the Sixth Congress of the International Ergonomics Association. International Ergonomics Association, July 1976.

16. Freddy, A., et. al.: The Application of a Theoretical Learning Model to a Remote Handling Control System. Management Information Services, Detroit, Michigan, 1970.

17. Barbera, A.: An Architecture for a Robot Hierarchical. Control System, U.S. Department of Commerce, National Bureau of Standards, Washington, D.C., December 1977.

18. Dunne, M.: An Advanced Robot Assembly. In Robots II. Conference in Detroit, Reference Number M577-756. Society of Manufacturing Engineers, Dearborn, Michigan, 1977.

19. Kirkpatrick, M., Shields, N.L., Jr., Malone, T.B., Frederick, P.N. and Brye, R.G. Manipulator system performance measurement. Proceedings of the Second National Conference on Remotely Manned Systems. University of Southern California, 1975.

20. Nevins, J. and Whitney, D.: Assembly Research and Manipulation. In Proceedings of the 1977 Institute of Electrical and Electronic Engineering Conference on Decision and Control, Pages 735-742, IEEE, New York, 1977.

21. Vertut, J.: Control of Master-Slave Manipulators and Force Feedback. In Proceedings of the Joint Automatic Control Conference, Pages 172-184, IEEE, New York, 1977.

22. Munson, G.: Foundaries, Robots and Productivity. In Industrial Robots, Volume 2, edited by W. Tanner, Pages 109-124. Society of Manufacturing Engineers, Dearborn, Michigan, 1979.

23. National Aeronautic and Space Administration: Space Shuttle Program: Level II Program Definition and Requirements. Space Shuttle System Payload Accommodations. Document JSC 07700, Volume XIV, Revision G. Johnson Space Center, Texas, 1980, (with updates included through 1982).

24. Malone, T.B., Kirkpatrick M. and Shields, N.L., Jr. Manipulator system man-machine interface evaluation program, Report Number H-4-3. Essex Corporation, Alexandria, Virginia, under Contract NAS-28298, January 1974.

25. Shields, N.L., Jr., Brye, R.C., Henderson, D.E. and Slaughter, P.H. Earth orbital teleoperator systems evaluation, 1978 year-end report. Essex Corporation, Alexandria, Virgnia, February 1979.

26. Brye, R.G., Shields, N.L., Jr. and Kirkpatrick, M. Earth orbital teleoperator mobility system evaluation program, Report Number 1. Essex Corporation, Alexandria, Virginia, January 1977.

27. Shields, N.L., Jr., Pruett, E.C., Loughead, T.E. and Neal V. Neutral Buoyance Simulation NB-19 fabricated beam assembly of large space structures. Essex Corporation, Huntsville, Alabama, March 1981.

28. Shields, N.L., Jr. and Henderson D.E. Earth orbital teleoperator systems evaluation, 1979-1980 report. Essex Corporation, Huntsville, Alabama, February 1981.

29. National Aeronautics and Space Administration: Research and Technology, Annual Report. Marshall Space Flight Center, Research and Technology Office, Alabama, 1981.

30. National Aeronautics and Space Administration: Research and Technology, Annual Report. Marshall Space Flight Center, Research and Technology Office, Alabama, 1982.

31. Middleton, R.: Quick Look Report. National Aeronautics and Space Administration, Marshall Space Flight Center, 1982.

32. Johnson, FUR 302. Document Number 582-2693. Report of Open Cherry Picker, Satellite Servicing, 1982.

33. Martin Marietta: Skylab Boost Mission, Space Shuttle Program and Teleoperator Retrieval System, 1978.

34. National Aeronautics and Space Administration, Johnson Space Center: FUR 175. Evaluation of the REM for the PDP, 1980. (unpublished internal note.)

35. Inagaki, K., et. al.: A Remote Inspection System for Nuclear Power Plants. In Proceedings of the 25th Conference on Remote Systems Technology, Pages 405-410. American Nuclear Society, La Grange Park, Illinois, 1977.

36. Rieger, H. and Abt, B.: Antenna for Communications Satellites. In Dorier-Post (English Edition), Pages 23-26, November 2, 1981.

37. Crawford, P. and Kasulka, L.: Science and Applications Space Platform (SASP) End to End System Study, Final Report, Report Number MDC G9372. McDonnell Douglas Corporation, Huntington Beach, California, 1981.

38. Greenberg, M.S.: Development of Deployable Structures For Large Space Platforms, Interim Report, Volume 1. Report Number SSD-820121-1. Rockwell International, Space Operations/Integration and Satellite Systems Division, Downey, California, 1982.

40. Bement, L., et. al.: EVA Assembly of a Large Space Structure Element. NASA Technical Paper 1872. National Aeronautic and Space Administration, Scientific and Technical Information Branch, Washington, D.C., 1981.

7.0 BIBLIOGRAPHY

Albus, J.: Proximity-Vision System for Protoflight Manipulator Arm, Final Report, Report Number NBSIR 78-1576. National Bureau of Standards, Washington, D.C., 1978.

Albus, J., et al: National Bureau of Standards/Robot Institute of America Robotics Research Workshop. Library of Congress Catalog Card Number 80-600192, proceedings of the NBS/RIA Workshop on Robotic Research, held at the National Bureau of Standards, 1979. National Bureau of Standards, Industrial Systems Division, Washington, D.C., 1981.

American Institute of Astronautics and Aeronautics: Toward Permanent Manned Occupancy of Space. 2nd AIAA Conference on Large Space Platforms held in San Diego, California. American Institute of Aeronautics and Astronautics, New York, 1981.

American Society for Testing Materials: Adhesion on Cold Welding of Materials in Space Environments. ASTM Spec. Tech. Publ. No. 431, Philadelphia, Pennsylvania, 1967.

Armstrong, W., et. al.: Large Space Erectable Structures, Building Block Structures Study, Final Report. Report Number D-180-20607-2, prepared for Johnson Space Center. Boeing Aerospace Company, Seattle, Washington, 1977.

Astrophysics Explorer Missions Study, Final Report. Aerospace Report Number ATR-79(7678-02)-1. The Aerospace Corporation, Programs Group, Satellite Systems Division, El Segundo, California, 1979.

Autofact: Computer-Integrated Manufacturing: Its Huge Potential for U.S. Industry, Conference Report. In Modern Materials Handling, Cahners Publication Company Incorporated, Boston, January 6, 1982.

Aviation Week and Space Technology: Boeing Aerospace Wins IUS Contract. In Aviation Week and Space Technology, Page 22. McGraw-Hill, Inc., New York, February 14, 1983.

Aviation Week and Space Technology: External Tank Depicted as Space Station Element. In Aviation Week and Space Technology, Page 246. McGraw-Hill, Inc., New York, September 6, 1982.

Aviation Week and Space Technology: Lockheed Develops Solar Wing Array. In Aviation Week and Space Technology, Page 247. McGraw-Hill, Inc., New York, September 6, 1982.

Aviation Week and Space Technology: Manned Orbital Space Station Studied. In Aviation Week and Space Technology, Pages 57-61. McGraw-Hill, Inc., New York, August 23, 1982.

Battelle: Low Energy Deployment and Retrieval Analyses, Final Briefing. Report Number PF14/79-4. Columbus Laboratories, Columbus, Ohio, 1979.

Bevilacqua, F. and Pasta, M.: Large Platforms for Future Telecommunication Applications: European Conceptual Approach. Report No. A81-47321, presented at The 32nd Congress of the International Astronautical Federation in Rome. Pergamon Press, New York, 1981.

Black, J.T. Cellular Manufacturing Systems: The Japanese Advantage. Department of Industrial and Systems Engineering, UAH, Huntsville, Alabama, 1982.

Boddy, J. and Wiley, L.: Space Construction System Analysis, Final Report, Space Construction Experiments Concepts. Report Number SSD 80-0040. Rockwell International, Downey, California, 1980.

Bodle, J. Space Construction Experiment Definition Study Part I Final Report, GDC-ASP-81-010. General Dynamics, Convair Division, San Diego, California, 1981.

Boeing Aerospace Company: GEO Construction/Electric OTV Concept. In Solar Power Satellite System Definition Study. Boeing Aerospace Company, Seattle, Washington, 1976.

Boeing Aerospace Company, General Electric, Grumman, Arthur D. Little, Inc., and TRW: Solar Power Satellite System Definition Study. Document Number D180-24735-1. Boeing Aerospace Company, Seattle, Washington, 1979.

Boeing Aerospace Company, General Electric, Grumman, Arthur D. Little, Inc., and TRW: Solar Power Satellite System Definition Study, Phase 2, Interim Report. Document Number D180-25381-1. Boeing Aerospace Company, Seattle, Washington, 1979.

Boeing Aerospace Company, General Electric, Grumman, Arthur D. Little, Inc., and TRW: Solar Power Satellite System Definition Study, Phase 2, Part 1, Midterm Briefing. Document Number D180-25402-1. Boeing Aerospace Company, Seattle, Washington, 1979.

Boeing Aerospace Company, Hamilton Standard and Grumman: Space Operations Center System Analysis Study Extension, Final Report, Volume 3, Book 1 of 2, SOC System Definition Report, Revision A. Document Number D180-26495-3. Boeing Aerospace Company, Seattle, Washington, 1980.

Boeing Aerospace Company, Hamilton Standard and Grumman: Space Operations Center System Analysis Study Extension, Final Report Volume 3, Book 2 of 2, SOC System Definition Report, Revision A. Document Number D180-26495-3. Boeing Aerospace Company, Seattle, Washington, 1980.

Boeing Aerospace Company, Hamilton Standard and Grumman: Space Operations Center System Analysis Study Extension, Executive Summary, Final Report, Volume 1. Report Number D180-26785-1, prepared for Johnson Space Center. Boeing Aerospace Company, Seattle, Washington, 1982.

Boeing Aerospace Company, Hamilton Standard and Grumman: Space Operations Center System Analysis Study Extension, Programmatics and Cost, Final Report, Volume 2. Report Number D180-26785-2, prepared for Johnson Space Center. Boeing Aerospace Company, Seattle, Washington, 1982.

Boeing Aerospace Company, Hamilton Standard and Grumman: Space Operations Center System Analysis Study Extension, Final Report, Volume 4, SOC System Analysis Report, Book 1 of 2. Document Number D180-26785-4. Boeing Aerospace Company, Seattle, Washington, 1982.

Boeing Aerospace Company, Hamilton Standard and Grumman: Space Operations Center System Analysis Study Extension, Final Report, Volume 4, SOC System Analysis Report, Book 2 of 2. Document Number D180-26785-4. Boeing Aerospace Company, Seattle, Washington, 1982.

Boeing Aerospace Company, Hamilton Standard and Grumman: Space Operations Center System Analysis, Final Report Volume 3, Book 1 of 2, SOC System Definition Report. Document Number D180-26495-3, Revision A. Boeing Aerospace Company, Seattle, Washington, 1982.

Boeing Aerospace Company, Hamilton Standard and Grumman: Space Operations Center System Analysis, Final Report Volume 3, Book 2 of 2, SOC System Definition Report. Document Number D180-26495-3, Revision A. Boeing Aerospace Company, Seattle, Washington, 1982.

Boyer, W. (Ed.): Large Space Systems Technology, 1981. NASA Conference Publication 2215 Part 1. Third Annual Technical Review held at Langley Research Center. National Aeronautics and Space Administration Scientific and Technical Information Branch, Washington D.C., 1981.

Boyer, W. (Ed.): Large Space Systems Technology, 1981. NASA Conference Publication 2215 Part 2. Third Annual Technical Review held at Langley Research Center. National Aeronautics and Space Administration, Scientific and Technical Information Branch, Washington D.C., 1981.

Bowden, M. and Akin, D.: NB-42B Test Report: Neutral Buoyancy Simulation of EVA Assembly. Document Number SSL 23-81. Massachusetts Institute of Technology, Cambridge, Massachusetts, 1981.

Britton, W. et al.: Design Study of Teleoperator Space Spider. Report Number MCR-79-522. Contract NAS8-32620. Martin Marietta, Denver, Colorado, 1979.

Brown, J.: Test Report FUR 175, Evaluation of Release Engagement Mechanism (REM) for the Plasma Diagnostics Package (PDP). Report Number JSC 16969. National Aeronautics and Space Administration, Johnson Space Center, Texas, 1980.

Brown, J.: Test Report FUR 216, Solar Maximum Mission/Multimission Modular Spacecraft (SMM/MMS) Berthing/Stowing. National Aeronautics and Space Administration, Johnson Space Center, Texas.

Burke, B.: Radio Telescopes Bigger than the Earth. In Astronautics and Aeronautics, Pages 44-52. American Institute of Aeronautics and Astronautics, New York, October, 1982.

Burns, G.: Space Platform Advanced Technology Study, Final Report. Report Number MDC G9346. McDonnell Douglas Astronautics Company, Huntington Beach, California, 1981.

Campbell, H.: Materials Processing in Space Free-Flyer Study Economic Benefits Analysis, Final Report. Report Number NAS5-26551, prepared for Goddard Space Flight Center. The Aerospace Corporation, El Segundo, California, 1981.

The Charles Stark Draper Laboratory, Inc.: Post Flight Analysis STS4 Flight Data Analysis. The Charles Stark Draper Laboratory, Cambridge, Massachusetts, 1982.

Clarke, M. and Preston-Anderson, A.: Color Coding of Televised Task Elements in Remote Work: A Literature Review with Practical Recommendations for a Fuel Recycle Facility. Report Number ORAU-190, UC-86. Oak Ridge, Tennessee, 1981.

Covault, C.: Mission 6's EVA to Verify Capability. In Aviation Week and Space Technology, Pages 47-49. McGraw-Hill, Inc., New York, January 3, 1983.

Covault, C.: Planners Set Long-Term Space Goals. In Aviation Week and Space Technology, Pages 75-78. McGraw Hill, Inc., New York.

Covault, C.: Soviets Plan Larger Space Assemblies. In Aviation Week and Space Technology, Page 55. McGraw-Hill, Inc., New York, October 9, 1978.

Covault, C.: TDRSS Deployment Involves Complex Operations. In Aviation Week and Space Technology, Pages 88-100. McGraw-Hill, Inc., New York, January 17, 1983.

Covington, C., and Piland, R.: Space Operations Center, Next Goal for Manned Space Flight? In Astronautics and Aeronautics, Pages 30-37. American Institute of Astronautics and Aeronautics, New York, September, 1980.

Deutsch, S.: Teleoperator Technology Development Program. National Aeronautics and Space Administration, Office of Life Sciences Bioengineering Division, Washington, D.C., 1975.

Disher, J.: Planning for Large Construction Projects in Space. In Using Space, Today and Tomorrow, proceedings of the Twenty-Eighth International Astronautical Congress, Volume 1, Pages 79-123. Pergamon Press, Oxford, 1979.

Duscai, S.: Manned Maneuvering Unit. Technical Briefing at Johnson Space Center. Martin Marietta, Huntington Beach, California, 1980.

Eike, D. and Malone, T.: Human Engineering Design Criteria for Modern Control/Display Components and Standard Parts, Final Report. Technical Report Number RS-CR-80-1, prepared for U.S. Army Human Engineering Laboratory Detachment, Systems Engineering Directorate. U.S. Army Missile Command, Redstone Arsenal, Alabama, 1980.

Engel, S. and Granda, R.: Guidelines for Man/Display Interfaces. Technical Report Number TR00-2720. IBM Poughkeepsie Laboratory, Poughkeepsie, New York, 1975.

Essex Corporation: Assembly/Deployment Scenario, GDC and Comsat LSTT Geostationary Platform, Alternative #1, Platform #1. Essex Corporation, Huntsville, Alabama, 1980.

Essex Corporation: Assembly Scenario. For McDonnell Douglas Astronautics Company, Advanced Science and Applications Space Platform (ASASP). Essex Corporation, Huntsville, Alabama, 1980.

Essex Corporation: Earth Orbiter Teleoperator Manipulator System Evaluation Program. Test Report Number 4. Essex Corporation, Huntsville, Alabama, 1977.

Essex Corporation: EVA Manipulation and Assembly of Space Structure Columns. Contract Number NAS8-32989. Essex Corporation, Huntsville, Alabama, 1979.

Essex Corporation: NB-37 Test and its Inverse, Test 4. Neutral Buoyancy Experiments at the Marshall Space Flight Center. Essex Corporation, Huntsville, Alabama, 1980.

Essex Corporation: Quick Look Test Report NB-19, Fabricated Beam Assembly. Neutral Buoyancy Experiments at Marshall Space Flight Center. Essex Corporation, Huntsville, Alabama, 1980.

Essex Corporation: Quick Look Test Report NB-37, Erectable Concepts for Large Space Systems Technology. Neutral Buoyancy Experiments at Marshall Space Flight Center. Essex Corporation, Huntsville, Alabama, 1980.

European Space Agency: Spacelab Payload Accommodation Handbook. Report Number SLP/2104. European Space Agency/National Aeronautic and Space Administration, Marshall Space Flight Center, Alabama, 1978.

Fairchild Space & Electronics Company: Spacecraft Services for Low-Earth-Orbit Missions, Proprietary Information. Fairchild, Space & Electronics Company, Germantown, Maryland, 1982.

Foldes, P. and Dienemann M.: Large Multibeam Antennas for Space. In Journal of Spacecraft and Rockets, Volume 17, Number 4, Pages 363-371. The American Institute of Aeronautics and Astronautics, New York, July-August 1980.

General Dynamics: Space Construction Experiment Definition Study (SCEDS) Part 1, Final Briefing. Report Number GDC-ASP-81-007. General Dynamics, Convair Division, San Diego, California, 1981.

General Dynamics: Space Construction Experiment Definition Study (SCEDS), Part 1, Final Report, Volume 1, Executive Summary. Contract Number NAS9-16303. General Dynamics Convair Division, San Diego, California, 1981.

General Dynamics: Space Construction Experiment Definition Study (SCEDS), Part 1, Final Report, Volume 2, Study Results. Contract No. NAS9-16303. General Dynamics Convair Division, San Diego, California, 1981.

General Dynamics: Space Construction Experiment Definition Study (SCEDS), Part II. Final Report, Executive Summary. Report Number GDC-ASP-82-003, submitted to National Aeronautics and Space Administration, Johnson Space Center. General Dynamics Convair Division, San Diego, California, 1982.

General Dynamics: Space Construction Experiment Definition Study (SCEDS), Part 2, Final Report, Study Results. Report Number GDC-ASP-82-004. General Dynamics Convair Division, San Diego, California, 1982.

General Dynamics Convair Division and Comsat Corporation: Geostationary Platform Systems Concepts Definition Follow-on Study, Task 2, LSST Special Emphasis. Report Number GDC-GPP-79-009. Convair Division of General Dynamics and Communications Satellite Corporation, San Diego, California, 1980.

General Dynamics Corporation: Geostationary Platform Systems Concepts Definition Follow-on Study, Final Report, Task 2, LSST Special Emphasis. Volume 2A. Technical Report Number GDC-GPP79-010. Convair Division of General Dynamics and Communications Satellite Corporation, San Diego, California, 1980.

General Electric Company: A Study of Teleoperator Technology Development and Experiment Programs for Manned Space Flight Applications, Final Report, Volume 1, Summary Volume. Report Number 71SD4202. The General Electric Company, Space Systems Organization, Valley Forge Space Center, Pennsylvania, 1971.

Gerlach, R.: A Maneuverable Subsatellite for Shuttle. National Aeronautics and Space Administration, Johnson Space Center, Texas, 1982.

Gevarter, W.: An Overview of Artificial Intelligence and Robotics - Robotics, 2. Report Number NBSIR 82-2479, prepared for National Aeronautics and Space Administration. U.S. Department of Commerce, National Bureau of Standards, Washington, D.C., 1982.

Gevarter, W.: An Overview of Computer Vision. Report Number NBSIR 82-2982, prepared for National Aeronautics and Space Administration. U.S. Department of Commerce, National Bureau of Standards, Washington, D.C., 1982.

Gomersall, E. (Coordinator): Life Science Research and the Science and Applications Space Platform. Ames Research Center, Biosystems Division, Moffet Field, California, 1982.

Graves, J. (Ed.): Space Power Subsystem Automation Technology. NASA Conference Publication 22B. National Aeronautics and Space Administration, Marshall Space Flight Center, Alabama, 1981.

Greenberg, H.: Third Monthly Report Development of Deployable Structures for Large Area/Linear Space Platforms. Prepared for Marshall Space Flight Center. Rockwell International, Downey, California, 1982.

Grumman Aerospace Corporation: Systems Definition Study for Shuttle Demonstration Flights of Large Space Structures, Volume 2. Technical Report Number DRD-MA-04, prepared for Marshall Space Flight Center. Grumman Aerospace Corporation, Bethpage, New York, 1979.

Grumman Aerospace Corporation: Orbiter-Based Construction Equipment Study - 4th Progress Report. Report Number SA-OB-RP-005, prepared for Johnson Space Center. Grumman Aerospace Corporation, Bethpage, New York, 1981.

Grumman Aerospace Corporation: Systems Definition Study for Shuttle Demonstration Flights of Large Space Structures, Final Review. Report Number NSS-LS-RP0020, prepared for Marshall Space Flight Center. Grumman Aerospace Corporation, Bethpage, New York, 1979.

Grumman Aerospace Corporation: Space Fabrication Demonstration System (SFDS), Operation and Maintenance, Volume 1. Grumman Aerospace Corporation, Bethpage, New York, 1978.

Hall, S.: Neutral Buoyancy Facility, NB-19 Test Plan, PD24. National Aeronautics and Space Administration, Marshall Space Flight Center, Alabama, 1980.

Harmon, L.: Touch-Sensing Technology: A Review. Technical Report Number MSR80-03. Society of Manufacturing Engineers, Dearborn, Michigan, 1980.

Hart, R. and Myers, H.: Space Construction System Analysis, Part 2, Platform Definition, Final Report. Report Number SSD 80-0037. Rockwell International, Downey, California, 1980.

Heard, W. et al.: Mobile Workstation Concept for Assembly of Large Space Structures (Zero Gravity Simulation Tests). In Large Space Systems Technology, Third Annual Technical Review, Part 1, held at Langley Research Center, Pages 193-204. National Aeronautics and Space Administration, Washington, D.C., 1981.

Heer, E.: Automated Decision Making and Problem Solving, Executive Summary, Volume 1, NASA Conference Publication 2180. National Aeronautics and Space Administration, Washington, D.C., 1980.

Herling, W.: In-Orbit Test Requirements for Initial Large Space Structures (LSS) Demonstration flight. SAWE Paper No. 1289. Index Category N30. Los Angeles, California: Society of Allied Weight Engineers, Inc., 1979.

Holloway, P. and Garrett, L.: Utility of and Technology for a Space Central Power Station. In Space - Laser Power Transmission System Studies, NASA Conference Publication 2214, Proceedings of a Symposium at Langley. National Aeronautics and Space Association, 1981.

Ibrahim, A. and Misra, A.: Altitude Dynamics of a Satellite During Deployment of Large Plate-Type Structures. Journal of Guidance, Control and Dynamics, Volume 5, Number 5, Page 442. American Institute of Aeronautics and Astronautics, New York, September-October 1982.

Interian, A.: A Study of Teleoperator Technology Development and Experiment Programs for Manned Space Flight Applications, Summary Volume, Final Report. Report Number 715/04202. Contract Number NAS9-11067. General Electric Company, Philadelphia, Pennsylvania, 1971.

Johnson, R.: Solar Power Satellite : Putting it Together. In Spectrum, Volume 16, Pages 37-40. Institute of Electrical and Electronics Engineering, September 1979.

Katz, E., et al.: Space Construction System Analysis, Final Resolution. Report Number PB80-39. Rockwell International, Downey, California, 1980.

Kirkpatrick, M.: Appendix A, Role of Man in Flight Experiment Payloads - Phase 2, Final Report, prepared for Marshall Space Flight Center. Essex Corporation, Huntsville, Alabama, 1975.

Kopriver, III, F. (Ed.): Large Space Systems Technology - 1980, Base Technology. NASA Conference Publication 2168. National Aeronautics and Space Administration, Scientific and Technical Information Branch, Washington, D.C., 1980.

Kopriver, III, F. (Ed.): Large Space Systems Technology - 1980, Base Technology. NASA Conference Publication 2168. National Aeronautics and Space Administration,Scientific and Technical Information Branch, Washington, D.C., 1980.

Kunz, K.: Orbit Transfer Propulsion and Large Space Systems. In Journal of Spacecraft and Rockets, Volume 17, Pages 495-500. American Institute of Aeronautics and Astronautics, New York, November-December, 1980.

Lenda, J.: Manned Maneuvering Unit (MMU) Capabilities. Presented at Space Shuttle-Payload Accommodations/Applications, UCLA Extension Course, co-sponsored by University of Maryland. Martin Marietta, Denver, Colorado, 1979.

Lenda, J.: Manned Maneuvering Unit Report. Space Operations Simulator Run Report Number 5. Report Number MMU-SE-17-32-05. Contract Number NAS9-15999. Martin Marietta, Denver, Colorado, 1982.

Lenda, J.: Manned Maneuvering Unit User's Guide, Contract Number NAS9-14593. Martin Marietta, Denver, Colorado, 1978.

Lenorovitz, J.: French Plan Unmanned Space Station. In Aviation Week and Space Technology, Pages 49-51. McGraw-Hill, Inc., New York, August 3, 1981.

Lillenas, A.: Erectable Large Structures Concept Evaluation and Trade-off Studies, Task 2, Final Report. Report Number 79MA0376. Rockwell International, Downey, California, 1979.

Lockheed Missiles and Space Company: Automated Installation of Large-Platform Utilities, Second Annual LSST Program Technical Review. Prepared for Langley Research Center. Lockheed Missiles & Space Company, Sunnyvale, California, 1980.

Loughead, T. and Pruett, E.: EVA Manipulation and Assembly of Space Structure Columns. NASA Contractor Report 3285, prepared for Marshall Space Flight Center. National Aeronautics and Space Administration, Scientific and Technical Information Office, Washington, D.C., 1980.

Lowrie, J. et al.: Evaluation of Automated Decision Making Methodologies and Development of an Integrated Robotic System Simulation, Study Results. National Aeronautics and Space Administration, Langley Research Center, Virginia, 1982.

Lowrie, J., et al.: Evaluation of Automated Decision Making Methodologies and Development of an Integrated Robotic System Simulation, Appendices B, C, D, E. Contract Report Number 165977. National Aeronautics and Space Administration, Langley Research Center, Virginia, 1982.

Malone, T. et al.: External Operational, Maintenance and Repair (OMR) Mode Selection Criteria. Report Number H-76-5, prepared for Marshall Space Flight Center. Essex Corporation, Huntsville, Alabama, 1976.

Mandell, H.: New Technology Cost Estimating Relationships. National Aeronautics and Space Administration, Johnson Space Center, Texas, 1977.

Martin Marietta Corporation: Attached Manipulator System Design and Concept Verification for Zero Gravity Simulation, Final Report. Report Number JSC 08021, prepared for Johnson Space Center. Martin Marietta Corporation, Denver, Colorado, 1973.

Martin Marietta Corporation: Integrated Control/Display Station for Teleoperator and Experiments (Aft Crew Station of Orbiter), Informal Midterm Briefing. Contract Number NAS8-31147. Martin Marietta Corporation, Huntington Beach, California, 1975.

Martin Marietta Corporation: Integrated Orbital Servicing Study Follow-On, Design Acceptance Review. Prepared for Marshall Space Flight Center. Martin Marietta Corporation, Denver, Colorado, 1978.

Martin Marietta Corporation: Manned Maneuvering Unit User's Guide. Report Number MMU-SE-17-46. Contract Number 15999. Martin Marietta Corporation, Denver, Colorado, 1982.

Martin Marietta Corporation: Manned Maneuvering Unit System Design Specification, Revision A. Report Number MCR-75-398. Martin Marietta Corporation, Denver, Colorado, 1975.

Martin Marietta Corporation: Orbital Assembly and Maintenance Study. Contract Number NAS9-14319. Publication Number MCR-75-319. Martin Marietta Corporation, Huntington Beach, California, 1975.

Martin Marietta Corporation: Orbital Construction Support Equipment, Final Report. Report Number MCR-77-234. Martin Marietta Corporation, Huntington Beach, California, 1977.

Martin Marietta Corporation: Skylab Boost Mission (Teleoperator Retrieval System) Preliminary Design Review. Report Number TRS-CM-04 (PDR-2B). Contract Number NAS8-32821. Martin Marietta Corporation, Huntington Beach, California.

Martin Marietta Corporation: Space Shuttle Program Teleoperator Retrieval System Mission Operations Requirements, Skylab Boost Mission, Revision. Report Number TRS-OP-04. Martin Marietta Corporation, Huntington Beach, California, 1978.

Martin Marietta Corporation: Space Shuttle Program Teleoperator Retrieval System, Software, Skylab Boost Mission. Preliminary Design Review. Report Number TRS-CM-04-4DR-SS-4-4. Martin Marietta Corporation, Huntington Beach, California, 1978.

Massachusetts Institute of Technology: Monthly Progress Report, Number 3, Automated Techniques for Large Space Structures, An Expansion to Space Applications of Automation, Robotics, and Machine Intelligence Systems (ARAMIS), Phase 1. SSL Report Number 39-81, submitted to Marshall Space Flight Center. Massachusetts Institute of Technology, Space Systems Laboratory, Cambridge, Massachusetts, 1981.

Massachusetts Institute of Technology: Department of Aeronautics and Astronautics, Space Systems Laboratory, MNBF - MIT Underwater Simulation of EVA Assembly, NB-32B. Massachusetts Institute of Technology, Cambridge, Massachusetts, 1980.

McDonnell Douglas Corporation: Evolutionary Science and Applications Space Platform (Characterization of Concepts) (Tasks A and B), Final Briefing (DR-3). Report Number MDC G9766. McDonnell Douglas Corporation, Huntington Beach, California, 1982.

McDonnell Douglas Corporation: Evolutionary Space Platform Concept Study, Volume 1, Executive Summary. Report Number MDC H0072/DPD-610/DR-4. McDonnell Douglas Corporation, Huntington Beach, California, May 1982.

McDonnell Douglas Corporation: Evolutionary Space Platform Concept Study, Technical Report Part A - SASP Special Emphasis Trade Studies, Volume 2. Report Number MDC-H0072. McDonnell Douglas Corporation, Huntington Beach, California, 1982.

McDonnell Douglas Corporation: Evolutionary Space Platform Concept Study, Volume 2, Technical Report, Part B - Manned Space Platform Concepts. Report Number MDC H0072. McDonnell Douglas Corporation, Huntington Beach, California, 1982.

McDonnell Douglas Corporation: First Quarterly Briefing: Conceptual Design Study of a Science and Applications Space Platforms (SASP). Report Number MDC G8257. McDonnell Douglas Corporation, Huntington Beach, California, 1979.

McDonnell Douglas Corporation: Mid-term Briefing: Conceptual Design Study Science and Applications Space Platform (SASP). Report Number MDC 68295. McDonnell Douglas Corporation, Huntington Beach, California, 1980.

McDonnell Douglas Corporation: Third Quarter Briefing: Conceptual Design Study Science and Applications Space Platform (SASP) Report Number MDC G8543. McDonnell Douglas Corporation, Huntington Beach, California, 1980.

McDonnell Douglas Corporation: LSST System Analysis and Integration Task for an Advanced Science and Application Space Platform. McDonnell Douglas Corporation, Huntington Beach, California, 1980.

Middleton, J.A.: SPAR STS-3 Quick Look Report. Report Number SPAR-RMS.R.558. Spar Aerospace Limited, Weston, Ontario, Canada, 1982.

Miller, R. and Smith, D.: Fabrication Methods for Construction from Lunar Materials. Report Number A79-53304, presented at the 30th Congress of The International Astronautical Federation in Munich. Pergamon Press, New York, 1979.

Miller, R., et al.: Space Applications of Automation, Robotics and Machine Intelligence Systems (ARAMIS), Volume 2. Space Projects Overview, Phase 1, Final Report, prepared for Marshall Space Flight Center, Alabama. Massachusetts Institute of Technology, Cambridge, Massachusetts, 1982.

Miller, R., et al.: Space Applications of Automation, Robotics and Machine Intelligence Systems (ARAMIS), Phase 1. Monthly Progress Report Number 6. SSL Report No. 38-81, submitted to Marshall Space Flight Center. Massachusetts Institute of Technology, Cambridge, Massachusetts, 1981.

Miller, R., et al.: Space Applications of Automation, Robotics and Machine Intelligence Systems (ARAMIS), Phase I. SSL Report Number 3-82. Contract Number NAS8-34381, submitted to Marshall Space Flight Center. Massachusetts Institute of Technology, Space Systems Laboratory, Cambridge, Massachusetts, 1982.

Miller, R., et al.: Space Applications of Automation, Robotics and Machine Intelligence Systems (ARAMIS) AMARMIS Overview, Phase I. Final Report, prepared for Marshall Space Flight Center. Massachusetts Institute of Technology, Space Systems Laboratory, Artificial Intelligence Laboratory, Cambridge, Massachusetts, 1982.

Miller, R., et al.: Space Applications of Automation, Robotics and Machine Intelligence Systems (ARAMIS) Application of ARAMIS Capabilities to Space Project Functional Elements, Phase 1. Final Report, Volume 4, prepared for Marshall Space Flight Center. Massachusetts Institute of Technology, Cambridge, Massachusetts, 1982.

Miller, R., et al.: Space Applications of Automation, Robotics and Machine Intelligence Systems (ARAMIS) Supplement Appendix 4.3: Candidate ARAMIS Capabilities, Phase 1. Final Report, Volume 4, prepared for Marshall Space Flight Center. Massachusetts Institute of Technology, Cambridge, Massachusetts, 1982.

Mitchell, J.: Test Report, FUR 302, Open Cherry Picker Satellite Servicing, Part 2. National Aeronautics and Space Administration, Johnson Space Center, Houston, Texas, 1982.

Mitchell, J.: Test Report, FUR 309, Definition of the SPAS-01 Berthing Aids for STS-7. National Aeronautics and Space Administration, Johnson Space Center, Houston, Texas, 1981.

Mitchell, J.: Test Report, FUR 339, IECM/REM Deployment and Berthing Evaluation. National Aeronautics and Space Administration, Johnson Space Center, Houston, Texas, 1981.

Mitchell, J.: Test Report, FUR 342, PDP/REM Deployment and Berthing Evaluation. National Aeronautics and Space Administration, Johnson Space Center, Houston, Texas, 1981.

Modern Materials Handling: Industrial Robots - Now They Can See, Think, and Feel, Robots 6 Report. In Modern Materials Handling, Pages 50-62. Cahners Publishing Company, Incorporated, Boston, Massachusetts, May 6, 1982.

Molloy, R.: Space Shuttle Program Teleoperator Retrieval System, Revision A. Document Number TRS-SE-02. Martin Marietta, Huntington Beach, California, 1978.

Nathan, A.: A Near Term Space Demonstration Program for Large Structures. In the Industrialization of Space: Proceedings of the Twenty-Third Annual Meeting, Part 1, Pages 57-77. Report Number AAS77-202. American Astronautical Society and Univelt, Inc., San Diego, California, 1978.

National Aeronautics and Space Administration: Assessment and Sensitivity Analysis of the Vought Corporation's Low Energy Stage Study Program Development. Marshall Space Flight Center, Alabama, 1978.

National Aeronautics and Space Administration: Experimental Geostationary Platform. Marshall Space Flight Center, Alabama, 1980.

National Aeronautics and Space Administration: 15th Aerospace Mechanisms Symposium, NASA Conference Publication 2181, held at Marshall Space Flight Center. Scientific and Technical Information Branch, Washington, D.C., 1981.

National Aeronautics and Space Administration, Flight Activities Branch. Flight Operations Directorate: Final OFT Shuttle Flight Operational Manual, Payload Deployment and Retrieval System. Report Number 16-PDRS. Johnson Space Center, Texas, 1981.

National Aeronautics and Space Administration: Fourteenth Annual Conference on Manual Control NASA Conference Publication 2060, held at the University of Southern California, Ames Research Center, Moffet Field, California, 1978.

National Aeronautics and Space Administration: The Human's Role in Space. From the New Directions Symposium, Woods Hole, Massachusetts, 1980.

National Aeronautics and Space Administration: Large Space Structures, Program Summary. Office of Space Transportation Systems Advanced Programs, Washington, D.C., 1981.

National Aeronautics and Space Administration: Large Space Systems/Low Thrust Propulsion Technology. NASA Conference Publication 2144, information exchange held at Lewis Research Center. Scientific and Technical Information Branch, Washington, D.C., 1980.

National Aeronautics and Space Administration: Large Space Systems Technology, 3rd Technical Review. Langley Research Center, Virginia, 1981.

National Aeronautics and Space Administration: Machine Intelligence and Robotics: Report of the NASA Study Group, Final Report. Washington, D.C., 1980.

National Aeronautics and Space Administration: NRCC/Lehigh Real Time Photogrammetry System Demonstration. Report Number FUR 257. Manipulator Development Facility at Houston, Texas. Johnson Space Center, Texas. National Research Council, Ottawa, Canada, 1980.

National Aeronautics and Space Administration: Payload Integration Plan, Space Transportation System and Teleoperator Retrieval System, Preliminary. Johnson Space Center, Texas, and Marshall Space Flight Center, Alabama, 1978.

National Aeronautics and Space Administration: Preliminary Payload Element Schedules and Characteristics for Space Platforms Concept Studies. Office of Space Science, Washington, D.C., 1979.

National Aeronautics and Space Administration: Remote Teleoperator System (RTS) Program Definition Activities. Marshall Space Flight Center, Alabama, 1979.

National Aeronautics and Space Administration: Research and Technology Annual Report. Research and Technology Office, Marshall Space Flight Center, Alabama, 1980.

National Aeronautics and Space Administration: Research and Technology Annual Report. Research and Technology Office, Marshall Space Flight Center, Alabama, 1981.

National Aeronautics and Space Administration: Research and Technology Annual Report. Research and Technology Office, Marshall Space Flight Center, Alabama, 1982.

National Aeronautics and Space Administration: Satellite Services Workshop. Report Number JSC-18201, sponsored and conducted by Johnson Space Center. Engineering and Development Directorate, Texas, 1982.

National Aeronautics and Space Administration: Satellite Services Workshop, Volume 2. Johnson Space Center, Texas, 1982.

National Aeronautics and Space Administration: 16th Aerospace Mechanisms Symposium, NASA Conference Publication 2221 held at Kennedy Space Center, Florida. Scientific and Technical Information Branch, Washington, D.C., 1982.

National Aeronautics and Space Administration: Solar Maximum Mission/ Multimission Modular Spacecraft (SMM/MMS), Berthing, Stowing Simulation (FUR 216), Volume 10, Number 17. Johnson Space Center, Texas, 1980.

National Aeronautics and Space Administration: Space Systems Technology Model, Space Technology Trends and Forecasts, Volume 2. Office of Aeronautics and Space Technology, Washington, D.C., 1981.

National Aeronautics and Space Administration: Space Transportation Systems Advanced Concepts, Large Space Structures. Washington, D.C., 1981.

National Aeronautics and Space Administration: Spacecraft Technology Plan, Second Draft, Plan Overview and Methodology, Volume 1. Office of Aeronautics and Space Technology, Space Systems Division, Washington, D.C., 1981.

National Aeronautics and Space Administration: Spacecraft Technology Plan, Second Draft, Detailed Tasks and Requirements, Volume 2. Office of Aeronautics and Space Technology, Space Systems Division, Washington, D.C., 1981.

National Aeronautics and Space Administration, S/E Chief, Life Science Project Division: Strawman Payload for 30-Day Mission. Johnson Space Center, Houston, Texas, 1979.

Naumann, E. and Butterfield, A.: Large Space Systems Technology, Volume 1. NASA Conference Publication 2035, proceedings from an Industry/Government Seminar held at Langley Research Center. National Aeronautics and Space Administration Scientific and Technical Information Office, Washington, D.C., 1978.

Pratt, R.: Orbiter Based Construction Equipment Study - 5th Progress Report. Report Number SA-OB-RP-007, prepared for Johnson Space Center. Grumman Aerospace Corporation, Bethpage, New York, 1981.

Pruett, E., et al.: Extravehicular Activity Design Guidelines and Criteria. Report No. H-76-6. Contract NAS8-31454, prepared for Marshall Space Flight Center. Essex Corporation, Huntsville, Alabama, 1976.

Pruett, E., et al.: Structural Attachments for Large Space Structures, Report No. H-80-04. Essex Corporation, Huntsville, Alabama, 1980.

Puckett, P.: PDRA 2102 Payload Deployment and Retrieval System Workbook. National Aeronautics and Space Administration, Johnson Space Center, Crew Training and Procedures Division Flight Training Branch, Texas, 1979.

Rockwell International: Development of Deployable Structures for Large Area/Linear Space Platforms. Report Number SSD 82-0009, prepared for Marshall Space Flight Center. Rockwell International Space Operations and Satellite Systems Division, Downey, California, 1982.

Rockwell International: Satellite Power System (SPS), LSST Systems Analysis and Integration Task for SPS Flight Test Article (Exhibit E), Final Review. Prepared for Marshall Space Flight Center. Rockwell International, Downey, California, 1980.

Rockwell International: Satellite Power Systems (SPS), Final Report (Exhibit E). Report Number DCN 1-0-PP-00935. Space Operations and Satellite Systems Division, Downey, California, 1980.

Roebuck, J.: Shuttle Considerations for the Design of Large Space Structures, Amendment Modification 4S. NASA Contract Report Number 160861, researched by Rockwell International Corporation, Space Operations and Satellite Systems Division. National Aeronautics and Space Administration, Johnson Space Center, Texas, 1980.

Roebuck, J.: Space Construction System Analysis, Part 2, Final Report. Report Number SSD 80-0038. Rockwell International Satellite Systems Division, Space Systems Group, Downey, California, 1980.

Santeler, D.J., et al., Vacuum Technology and Space Simulation. Report Number Sp-105. National Aeronautics and Space Administration, Washington, D.C., 1966.

Sater, B. and Moore, T.: The Use of Ion Beam Cleaning to Obtain High Quality Cold Welds with Minimal Deformation. Report Number NASA TM 78933. Lewis Research Center, Ohio, 1978.

Schrock, S.: Teleoperator Maneuvering System/Mark II Propulsion Module Study, Monthly Progress Report. Report Number TMS-MA-01-02, prepared for Marshall Space Flight Center. Martin Marietta Aerospace, Denver, Colorado, 1981.

Schrock, S.: Teleoperator Maneuvering System/Mark II Propulsion Module Study, Briefing Material, Mid-term Review, Report Number TMS-SE-01-03. Contract Number NAS8-34581. Martin Marietta, Denver, Colorado, 1982.

Schwartz, J. and Hilchey, J.: The Manned Platform as an Evolutionary Means to Achieve a Permanent Manned Orbital Operations facility. Report Number AIAA-81-0462, presented at a Conference on Large Space Platforms: Toward Permanent Manned Occupancy of Space, 2nd. American Institute of Aeronautical Astronautics, San Diego, California, 1981.

Sheppard, A.: Aerospace Physiology (T-37/T-38) Life Support, Flying Training, Undergraduate Pilot Training, Study Guide/Workbook. Report Number P-V4A-B/D-AS-S. Air Training Command, 1976.

Sheridan, T. & Verplank, W.: Human and Computer Control of Undersea Teleoperations. Contract Number N00014-77-C-0256. Massachusetts Institute of Technology, Department of Mechanical Engineering, Cambridge, Massachusetts, 1978.

Sheridan, T. (Ed.): Performance Evaluation of Robots and Manipulators. NBS Special Publication 459, report of a Workshop held at Annapolis, Maryland, 1975. U.S. Department of Commerce, National Bureau of Standards, Washington, D.C., 1976.

Shields, N. & Pruett, E.: Human Factors and Space Technology: Notes on Space Related Human Factors Research and Development, History, Facilities, and Future Requirements. Report Number H-82-04. Prepared for Dr. Melvin Montemerlo of National Aeronautics and Space Administration Human Factors and Simulation Technology Division. Essex Corporation, Huntsville, Alabama, 1982.

Shields, N.: Human Operator Performance of Remotely Controlled Tasks: A Summary of Teleoperator Research Conducted at NASA's Marshall Space Flight Center between 1971 and 1981, Executive Summary. Report No. H-82-01.1, prepared for National Aeronautics and Space Administration. Essex Corporation, Huntsville, Alabama, 1982.

Shields, N.: Spacelab Display Design and Command Usage Guidelines. Report Number MSFC-PROC-711A. National Aeronautics and Space Administration, Marshall Space Flight Center, Alabama, 1980.

Shultz, J., et al.: Deployable Antenna Phase Study, Final Report. Contract No. NAS8-32394, prepared for National Aeronautics and Space Administration. Grumman Aerospace Corporation, Bethpage, New York, 1979.

Singer, A. and Rony, P.: Controlling Robots With Personal Computers. In Machine Design, Pages 78-82. Penton/IPC, Inc., Cleveland, Ohio, September 23, 1982.

Skelton, R., et al.: Order Reduction for Models of Space Structures Using Modal Cost Analysis. In Journal of Guidance, Control and Dynamics, Volume 5, Number 4, Page 351. American Institute of Aeronautics and Astronautics, New York, July-August, 1982.

Slysh, P. and Kugath, D.: Large Space Structure Automated Assembly Technique. In Journal of Spacecraft and Rockets, Volume 17, Number 4, Pages 354-362. American Institute of Aeronautics and Astronautics, New York, July-August 1980.

Smith, D.: Space Manufacturing Studies for SPS. In Space-Enhancing Technological Leadership, pages 229-246, proceedings of the Twenty-Seventh Annual Meeting. American Astronautical Society and Univelt, Incorporated, San Diego, California, 1981.

Smith, H.: Micro Accurate Weld Arc Guidance Controls Development. M&P Discretionary Fund Project Review. National Aeronautics and Space Administration, Marshall Space Flight Center, Alabama, 1979.

Snoddy, W.: Space Platforms for Science and Applications. In Astronautics and Aeronautics, Pages 28-36. American Institute of Aeronautics and Astronautics, New York, April 1981.

Solomon, S.: Miracle Workers. In Science Digest, Page 38-44. Hearst Magazines, New York, December 1981.

Soviets Show Assembly of Space Station Units. In Aviation Week and Space Technology, Page 21. McGraw-Hill, Inc., New York, 1981.

Space World Staff: Satellite Servicing NASA holds back. In Space World, Pages 36-37. Palmer Publications Incorporated, Amherst, Wisconsin, October 1982.

Spar Aerospace Ltd.: Quick Look Analysis of STS-2 Flight Data. Report Number SH/S EN-2. Weston, Ontario, Canada, 1982.

Stein, D., et al.: Space Station Needs, Attributes and Architectural Options. Grumman Aerospace Corporation, Bethpage, New York, 1982.

Stratton, D. and Butt, C.: Application of Shuttle Remote Manipulator System Technology to the Replacement of Fuel Channels in the Pickering Canada Reactor. Spar Aerospace Limited, Toronto, Canada, 1982.

Teledyne Brown Engineering: Space Platform Mission Information Document, Technical Report. Report Number SP82-MSFC-2623, prepared for Marshall Space Flight Center. Contract Number NAS8-34586. Teledyne Brown Engineering, Huntsville, Alabama, 1982.

Tewell, J., et. al.: Future Manned Machines and Operations in Space. In Proceedings of the Fifth World Congress on Theory of Machines and Mechanisms, Volume 1, Pages 78-81. The American Society of Mechanical Engineers, New York, 1979.

TRW: Large Space Structure Control Technology. Defense and Space Systems Group, Redondo Beach, California, 1981.

TRW: Payloads Requirements/Accommodations Assessment Study for Science and Applications Space Platforms, First Quarterly Review. Prepared for Marshall Space Flight Center. TRW Defense and Space Systems Group, Redondo Beach, California, 1980.

TRW: Payloads Requirements/Accommodations Assessment Study for Science and Applications Space Platforms, Second Quarterly Review. Prepared for Marshall Space Flight Center, Alabama. TRW, Redondo Beach, California, 1980.

Treer, K.: Automated Assembly. Society of Manufacturing Engineers, Dearborn, Michigan, 1979.

Turci, E. and Portelli, C.: Joint Technologies and Junction Concepts for Large Space Systems. Report Number A81-47486, presented at the 32nd Congress of the International Astronautical Federation in Rome. Pergamon Press, New York, 1981.

Truszkowski, W. and Moe, K.: Automation Program. Report Number 506-54-66. Goddard Space Flight Center, Maryland, 1982.

URS Corporation: URS/Matrix Company, Manned Maneuvering Unit Mission Definition Study. Final Report, Volume 2, Modification Number 15 (Appendices to the MMU applications analysis), prepared for Johnson Space Center. URS Matrix Company, Life and Environmental Sciences Division, Huntsville, Alabama, 1975.

URS Corporation: URS/Matrix Company, Manned Maneuvering Unit Mission Definition Study. Final Report, Volume 3, Modification Number 15 (MMU Ancillary Support Equipment and Attachment Concepts), prepared for Johnson Space Center. URS Matrix Company, Life and Environmental Sciences Division, Huntsville, Alabama, 1975.

URS Corporation: URS Matrix Company, Manned Maneuvering Unit Mission Definition Study. Final Report, Volume 1, Modification Number 15 (MMU Applications Analysis and Performance Requirements), prepared for Johnson Space Center. URS Matrix Company, Life and Environmental Sciences Division, Huntsville, Alabama, 1975.

URS Corporation: URS Matrix Company, Manned Maneuvering Unit Mission Definition Study, Final Review, Modification Number 15, prepared for Johnson Space Center. URS Matrix Company, Life and Environmental Science Division, 1975.

U.S. Army Test and Evaluation Command: Guidebook Supplement for Hedge. Human Factors Engineering Data Guide for Evaluation. U.S. Army, 1974.

Vernon, R.: Automated Installation of Large Platform Utilities. In Large Space Systems Technology, 1980, Second Annual Technical Review. Lockheed Missiles and Space Company, Incorporated, Sunnyvale, California, 1980.

Von Tiesenhausen, G.: An Approach Toward Function Allocation Between Humans and Machines in Space Station Activities. NASA Technical Memorandum 82510. Marshall Space Flight Center, Alabama, 1982.

Vought Corporation: Development of Deployable Structures for Large Area and Linear Space Platforms, First Quarterly Review. Prepared for Marshall Space Flight Center. Vought Corporation, Dallas, Texas, 1982.

Vought Corporation: Erectable Concepts for Large Space System Technology, Executive Summary. Report Number 2-51400/OR-LSS-01, prepared for Marshall Space Flight Center. Vought Corporation, Dallas, Texas, 1980.

Vought Corporation: Erectable Concepts for Large Space System Technology, NB-37. Neutral Buoyancy Facility, Neutral Buoyancy Experiments at Marshall Space Flight Center, Huntsville, Alabama, 1980.

Vought Corporation: Development of Deployable Structures for Large Area and Linear Space Platforms. Prepared for Marshall Space Flight Center, Vought Corporation, Dallas, Texas, 1980.

Vought Corporation: Erectable Concepts for Large Space System Technology. Contract Number NAS8-33431. Vought Corporation, Dallas, Texas, 1980.

Vought Corporation: Erectable Concepts for Large Space System Technology, Final Program Review. Vought Corporation, Dallas, Texas, 1980.

Vought Corporation: Low Energy Stage Study, Executive Summary, Report Number 2-55910/8R-3483, prepared for Marshall Space Flight Center. Vought Corporation, Dallas, Texas, 1978.

Vought Corporation: Teleoperator Maneuvering System Mission Requirements and System Definition Study, Formal Review. Report Number 2-30400/OR-52611, prepared for Marshall Space Flight Center. Vought Corporation, Dallas, Texas, 1980.

Vought Corporation: Teleoperator Maneuvering System Study Mission Requirements and System Definition Review, Executive Summary. Report Number 2-32500/IR-52821, prepared for Marshall Space Flight Center. Vought Corporation, Dallas, Texas, 1981.

Vought Corporation: Teleoperator Maneuvering System Study Mission Requirements and System Definition Review. Report Number 2-32500/IR-52961, prepared for Marshall Space Flight Center. Vought Corporation, Dallas, Texas, 1981.

Watters, H. and Stokes, J.: Construction in Space, Toward a Fresh Definition of the Man/Machine Relation. In Journal of Astronautics and Aeronautics, Pages 42-63. American Institute of Aeronautics and Astronautics, New York, 1979.

Wiesner, P.: Space Soyuz 6 and the Welding Process, Welding Experiments During Flight of Soyuz 5, Number 1, Pages 54-57. Translated into English from 215-MIT, Halle, East Germany, 1970.

Wheatley, T: SME Technical Report, Proceedings of NBS/Air Force ICAM Workshop on Robot Interfaces. Report Number MSR80-06. Society of Manufacturing Engineers, Dearborn, Michigan, 1980.

White, J: LSST System Analysis and Integration Task For an Advanced Science and Application Space Platform, Final Report. Report Number MDC-G8533, prepared for Marshall Space Flight Center. McDonnell Douglas Astronautics Company, Huntington Beach, California, 1980.

Williams, M. & Conway, E. (Eds.): Space Laser Power Transmission System Studies. NASA Conference Publication 2214. National Aeronautics and Space Administration, Washington, D.C., 1981.

Woodcock, G.: Space Settlements and Extraterrestrial Resources - What Benefits to SPS Construction? Space Solar Power Review, Volume 3, Pages 167-192. Pergamon Press, New York, 1982.

Zuech, Nello. Vision Systems Are Here. Control Engineering Conference and Exposition, Proceedings of Control Expo/82. Optical Recognition Systems, 1982.

APPENDIX A

SCIENCE AND APPLICATIONS MANNED SPACE PLATFORM (SAMSP)

ASSEMBLY ANALYSIS

1.0 INTRODUCTION

The Man Machine Assembly Analysis (MMAA) was exercised using the McDonnell-Douglas Science and Applications Manned Space Platform (SAMSP) as a test case. The exercise was performed to evaluate the assembly analysis as a tool for identifying assembly hardware such as restraint fixtures, manipulator, and crew aids as well as predicting assembly time and assembly cost. The analysis also forced consideration of alternate modes of assembly to identify the low cost option.

The exercise also provided or detailed analysis of the SAMSP proposed hardware, assembly plan, and crew procedures.

2.0 RELATED DOCUMENTATION

SAMSP reports and related documentation used in this exercise is listed below.

- Evolutionary Space Platform Concept Study. McDonnell Douglas Corporation, MDC H0072, DPD-610, DR4.

  - Volume I - Executive Summary (May 1982)
  - Volume II - Technical Report (May 1982)
  - Volume II - Programmation (May 1982)
  - Final Briefing (February 1982).

- Evolutionary Space Platforms, Space Transportation Systems Advanced Concepts, NASA MSFC, August 1982.

- LSST System Analysis and Integration Task for Advanced Science and Application Space Platform, Contract NAS8-33572, McDonnell Douglas Corporation, MDC G8533, July 1980.

3.0 SAMSP SYSTEM COMPONENTS

Several SAMSP concepts have been considered by MDAC and range from a basic platform with a few experiment pallets to several larger configurations with spacecraft servicing parts, large structure assembly fixtures, teleoperator docking hangars and numerous science payloads. The concept selected for this MMAA exercise was a basic configuration that could be expanded later. The selected configuration consists of four major system components and four payload components as listed below.

<u>Major System Components</u>

- 25 KW Space Platform

- Central Module

- Habitability Module

- Logistics Module

Payload Components

- o Solar Terrestrial Payload - Pallet
- o Earth Sciences Payload - Pallet
- o Life Science Laboratory - Can
- o Electrophoresis Unit - Can (Optional)

Also, optional system components can be provided to increase the platform capability. These components are the payload support beam for earth science payloads, and a supplemental crew module. The major system components are shown in Figure 1.

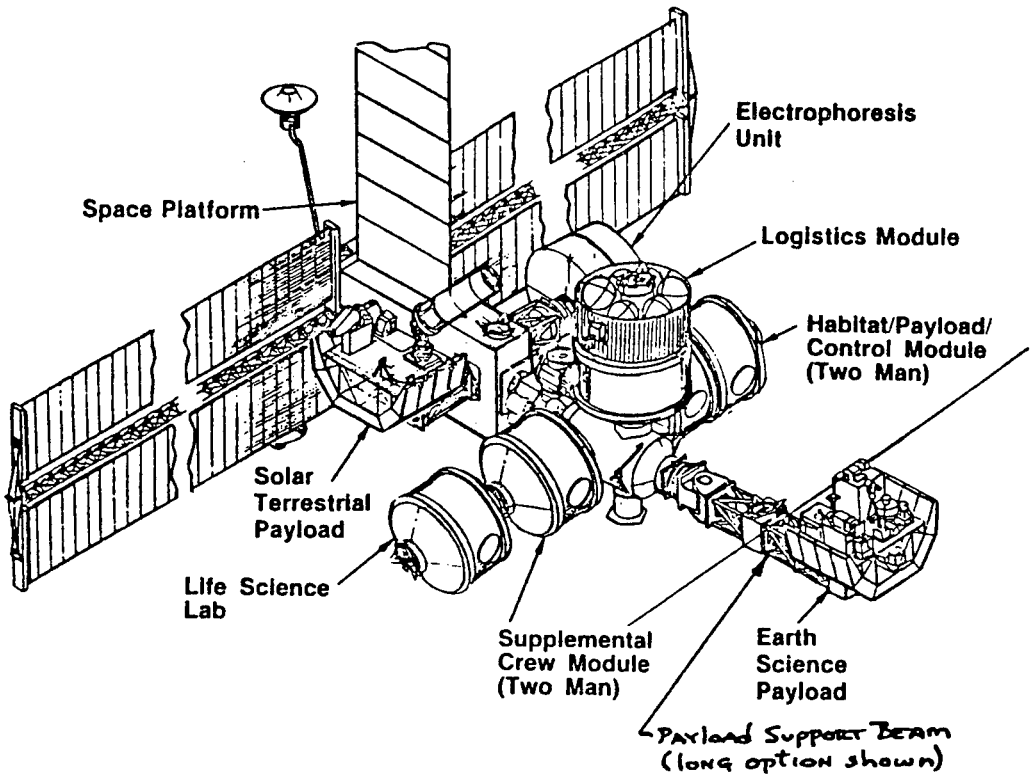

FIGURE 1 - MAJOR SYSTEM COMPONENTS

4.0 BASELINE ASSEMBLY PLAN

The MDAC reports describe two assembly methods for the SAMSP. In the concept study Volume II, Section 6.1 - Overall Configuration, a four-flight assembly sequence is described. In Section 6.13 - Mass Properties, a three-flight assembly sequence is described. The three-flight option was selected for more detailed evaluation. The shuttle manifests are shown in Table 1 for each option.

TABLE 1 - Flight Manifest
(Ref. Vol II, Part B)

FLIGHT NO. Section	SHUTTLE MANIFEST 6.13 Mass Properties Section*	6.1 Overall Configuration
1	25 KW Power Module Solar Terrestrial Pallet	25 KW Power Module Solar Terrestrial Pallet
2	Central Module Habitability Module	Central Module Electrophoresis Unit Earth Sciences Pallet Payload Support Beam
3	Logistics Module Earth Science Pallet Life Science Can	Logistics Module Supplemental Crew Module
4	None	Habitability Module Life Science Can

* Selected as baseline configuration

The major assembly steps required to construct the SAMSP are shown in Table 2 along with the proposed assembly method for each step.

TABLE 2 - Functional Analysis Major Steps

		Prime Mode
1.	Deploy Space Platform	RMS
2.	Erect Solar Arrays, HGAs & Radiator	Automated
3.	Deploy Solar Terrestrial Pallet & Berth to Space Platform (-Y)	RMS
4.	Deploy Central Module & Berth to Space Platform (+X)	RMS
5.	Deploy Habitability Module & Berth to Central Module (+Y)	RMS
6.	Deploy Logistics Module & Berth to Central Module (+Z)	RMS
7.	Deploy Life Science Payload & Berth to Central Module (-Y)	RMS
8.	Deploy Earth Observation Payload & Berth to Central Module (+X)	RMS

Using the proposed three-flight assembly plan as a baseline, launch weights were determined for each flight based on the weight of components to be flown and the shuttle support hardware required for each flight. These data are presented as Table 3.

TABLE 3 - Launch Weight Summary

FLIGHT NO.	WEIGHT (LBS) PLATFORM & PAYLOAD	SHUTTLE SUPPORT*	TOTAL
1	37,118	6,748	43,866
2	32,244	6,410	38,634
3	35,074	6,571	41,645

*Shuttle support includes berthing arm & payload restraints

None of the total flight weights exceed the shuttle capability.

The components on each flight are sized to occupy almost all the 15 ft. diameter and 60 ft. long cargo bay so flights cannot be combined to reduce the transportation charge.

For each flight, the system to be handled and its weight are listed in Table 4. All hardware is too massive for EVA or EVA/MMU handling but is within the range of RMS capabilities so the RMS is the logical choice for handling the components.

All latches & connectors will be remotely operated devices with EVA overrides.

TABLE 4 - Assembly Technique Selection

FLIGHT	SYSTEM TO BE "HANDLED"	WEIGHT (LBS)	BEST HANDLING METHOD
1	Space Platform	29,887	RMS
	Solar Terrestrial Pallet	7,231	RMS
2	Central Module	16,112	RMS
	Habitability Module	16,132	RMS
3	Logistics Module	20,333	RMS
	Life Sciences Payload	9,600	RMS
	Earth Observations Payload	5,141	RMS

5.0 DETAILED ASSEMBLY TASK DESCRIPTION (RMS)

The detailed assembly steps are described in Appendix A-1 for the baseline assembly method (RMS). This particular timeline represents the best of a series of iterations and had the lowest assembly time of any of the RMS assembly methods considered. The time required for each step, each task, and each of the three missions is also defined based on MMAA task element data from NBS simulations, RMS simulations at JSC and simulation data from SPAR. The assembly time summary from this timeline analysis is shown in Table 5. The table identifies the total time for RMS operations, automated operations and system checkout for each flight and each task. The summary shows that for each flight the cargo can be assembled in one day, thus avoiding the cost for additional days on orbit.

TABLE 5 - Assembly Time Summary

		- TIME REQ'D (MIN) -				TOTAL TIME	
FLIGHT	TASK	RMS OPERATIONS*	AUTO OPERATIONS	SYSTEM CHECKOUT	MIN	HRS	DAYS
1	1	92	-	-	92	1.5	
	2	-	30	-	30	.5	
	3	87	-	120	207	3.5	1
2	4	303	-	120	423	7.1	
	5	68	-	240	308	5.2	1
3	6	144	-	30	174	2.9	
	7	144	-	30	71	1.2	
	8	156	-	240	396	6.6	1

* Some automated & system checkout operations are included in the RMS operations but are generally less than 5 min. duration.

6.0 ALTERNATE ASSEMBLY METHODS

The three primary assembly methods and an assessment of their application to SAMSP assembly is presented below. Although RMS assembly is the most obvious assembly candidate, EVA support of the RMS operations could reduce the assembly time and cost.

Manual Assembly
- RMS considered most appropriate assembly method
- RMS with EVA assistance should be considered

Automated Assembly
- Not practical because of non-repetitive tasks

Remote Assembly
- Not considered - all tasks are performed in and around cargo bay
- Use of TMS would add expense of additional shuttle flight

A detailed task analysis for RMS with EVA similar to the RMS-only task analysis was performed and the costs associated with each method were identified from the MMAA Data Base D (STS Cost Elements). The costs for the two assembly techniques are included as Appendix A-2 and are summarized below.

BASIC MPS
ASSEMBLY COST SUMMARY

Method	Assembly Cost ($M)
RMS	149.7
RMS with EVA	152.2
Remote	N/A
Auto	N/A

7.0 SUMMARY

The assembly analysis of the SAMSP indicated no deficiencies in the MMAA structure or data bases except for RMS operation time data. This information was solicited from JSC and SPAR and was used to develop the task analysis times for RMS assembly. These task element times have been added to the MMAA data base.

The "manned" section of the MMAA forced consideration of manned assembly methods and provided data for their evaluation in terms of time for task completion and assembly cost. The "remote" and "automated" sections were not exercised in detail because of the nature and location of the assembly operations.

The only recommendations for improving the MMAA is to upgrade the EVA and RMS task element time data bases as more STS experience is gained through such tasks as Solar Max Repair Mission EVA and RMS operations, Space Telescope servicing, and deployment of various payloads with the RMS.

APPENDIX A-1

MSP TASK DESCRIPTION

MANNED SPACE PLATFORM TASK DESCRIPTION

FLIGHT NO. 1 - DEPLOY SPACE PLATFORM & SOLAR TERRESTRIAL PALLET

NO.	TASK/SUBTASK	PRIME MODE	REMARKS	TIME (MIN.)
1.0	DEPLOY SP	RMS		
1.1	Deploy Orbiter berthing arm & verify latch operation	Auto		10
1.2	Power up/warm up/uncradle RMS	RMS		10
1.3	Checkout RMS	RMS		20
1.4	Move RMS to SP grapple fixture	RMS		5
1.5	Adjust position & alignment	RMS		2
1.6	Attach RMS to grapple fixture & verify	RMS		2
1.7	Release keel & trunnion latches & verify	AUTO		10
1.8	Pull SP out of cargo bay & move to berthing arm	RMS		20
1.9	Adjust position & alignment	RMS		5
1.10	Berth SP to berthing arm, secure latches	RMS		2
1.11	Release RMS & move to cradle position	RMS		6
			TOTAL	92

NO.	TASK/SUBTASK	PRIME MODE	REMARKS	TIME (MIN.)
2.0	DEPLOY SOLAR ARRAYS, HIGH GAIN ANTENNAS & RADIATOR	AUTO		
2.1	Deploy solar arrays (2)	AUTO	Sequestial deployment assumed	10
2.2	Deploy HGAs (2)	AUTO		10
2.3	Deploy Radiator	AUTO		10
			TOTAL	30
3.0	DEPLOY SOLAR TERRESTRIAL PALLET			
3.1	Move RMS to pallet grapple fixture	RMS		5
3.2	Adjust position & alignment	RMS		2
3.3	Attach RMS & verify	RMS		2
3.4	Release keel & trunnion latches & verify	AUTO		10
3.5	Pull pallet out of cargo bay & move to SP -Y payload port	RMS		20
3.6	Adjust position & alignment	RMS		2
3.7	Berth pallet to port, secure latches, verify	RMS		5
3.8	Release RMS	RMS		2
3.9	Move RMS to SP grapple fixture	RMS		5
3.10	Adjust position & alignment	RMS		2
3.11	Attach RMS to grapple fixture & verify	RMS		2
3.12	Release Orbiter berthing arm latches	AUTO		2
3.13	Move SP to deployment position	RMS		10
3.14	Release SP	RMS		2

NO.	TASK/SUBTASK	PRIME MODE	REMARKS	TIME (MIN.)
3.15	Move RMS to cradle position	RMS		5
3.16	Cradle RMS, power down	RMS		11
3.17	Checkout all SP/payload systems	REMOTE		120
			TOTAL	207
			FLIGHT 1 -	329

- DEORBIT -

FLIGHT NO. 2 - DEPLOY CENTRAL MODULE & HABITABILITY MODULE

NO.	TASK/SUBTASK	PRIME MODE	REMARKS	TIME (MIN.)
4.0	DEPLOY CENTRAL MODULE	RMS		
4.1	Deploy Orbiter berthing arm & verify latch operations	AUTO		10
4.2	Power up/warm up/ uncradle RMS	RMS		10
4.3	Checkout RMS	RMS		20
4.4	Final rendezvous with SP			15
4.5	Move RMS to SP	RMS		5
4.6	Adjust position & alignment	RMS		2
4.7	Attach RMS to grapple fixture & verify	RMS		2
4.8	Move SP to berthing arm	RMS		20
4.9	Adjust position & alignment	RMS		5
4.10	Berth SP to berthing arm, secure latches	RMS		2
4.11	Release RMS & move to SP +X payload arm	RMS		6
4.12	Adjust position & alignment	RMS		5
4.13	Attach RMS to arm grapple fixture & verify	RMS		2
4.14	Pull arm to deployed position, verify latched	RMS		5
4.15	Release RMS & move to Central Module	RMS		6
4.16	Adjust position & alignment	RMS		2
4.17	Attach RMS to Central Module grapple fixture & verify	RMS		2
4.18	Release keel & trunnion latches & verify	RMS		10

NO.	TASK/SUBTASK	PRIME MODE	REMARKS	TIME (MIN.)
4.19	Move to SP +X port	RMS		20
4.20	Adjust position & alignment	RMS		5
4.21	Berth Central Module to SP +X port, secure latches	RMS		10
4.22	Verify interfaces	REMOTE		60
4.23	Release Orbiter berthing arm latches	AUTO		1
4.24	Move SP to parking position	RMS		10
4.25	Stow Orbiter berthing arm	AUTO		2
4.26	Move SP to position Central Module berthing port over Orbiter berthing port	RMS		20
4.27	Adjust position & alignment	RMS		5
4.28	Berth Central Module to Orbiter berthing port, secure latches	RMS		10
4.29	Crew enter central module and perform checkout of all systems (shirtsleeve)	DIRECT	A/L press/depress required, checkout time assumed	120
4.30	Release berthing port latches	AUTO		1
4.31	Lift Central Module away from port	RMS		5
4.32	Rotate 90° so module +Y port faces aft	RMS		10
4.33	Move module to Orbiter berthing port	RMS		5
4.34	Adjust position & alignment	RMS		2
4.35	Berth Control Module to Orbiter berthing port, secure latches	RMS		2
4.36	Release RMS, move to Habitability Module	RMS		6
			TOTAL	423

NO.	TASK/SUBTASK	PRIME MODE	REMARKS	TIME (MIN.)
5.0	DEPLOY HABITABILITY MODULE	RMS		
5.1	Adjust position & alignment	RMS		2
5.2	Attach RMS to grapple fixture & verify	RMS		2
5.3	Release keel & trunnion latches & verify	AUTO		10
5.4	Pull module out of cargo bag & move to Central Module +Y port	RMS		20
5.5	Adjust position & alignment	RMS		2
5.6	Berth Habitability Module, secure latches	RMS		2
5.7	Checkout Habitability Module System. Crew exist MSP & ingress Orbiter	DIRECT	A/L press/depress required, checkout time assumed	120
5.8	Release Orbiter berthing port latches	AUTO		2
5.9	Move MSP to deployment position	RMS		10
5.10	Release MSP	RMS		2
5.11	Move RMS to cradle position	RMS		5
5.12	Cradle RMS, power down	RMS		11
5.13	Checkout all MSP systems			120
			TOTAL	308
			FLIGHT 2	731

- DEORBIT -

FLIGHT NO. 3 - DEPLOY LOGISTICS MODULE, LIFE SCIENCES PAYLOAD & EARTH OBSERVATION PAYLOAD

NO.	TASK/SUBTASK	PRIME MODE	REMARKS	TIME (MIN.)
6.0	DEPLOY LOGISTICS MODULE	RMS		
6.1	Deploy Orbiter berthing port & verify latch operations	AUTO		10
6.2	Power up/warm up/uncradle RMS	RMS		10
6.3	Checkout RMS	RMS		20
6.4	Final rendezvous with MSP			15
6.5	Move RMS to MSP	RMS		5
6.6	Adjust position & align	RMS		2
6.7	Attach RMS to grapple fixture & verify	RMS	RMS may use Central Module grapple fixture	2
6.8	Move MSP to berthing port	RMS		20
6.9	Adjust position & alignment	RMS		5
6.10	Berth MSP Central Module to Orbiter berthing port, secure latches	RMS		2
6.11	Release RMS, move to Logistics Module	RMS		6
6.12	Adjust position & alignment	RMS		2
6.13	Attach RMS to grapple fixture & verify	RMS		2
6.14	Release keel & trunnion fittings & verify	RMS		10
6.15	Pull Logistics Module out of cargo bay & move to Central Module +Z port	RMS		20
6.16	Adjust position & alignment	RMS		5

NO.	TASK/SUBTASK	PRIME MODE	REMARKS	TIME (MIN.)
6.17	Berth module to +Z port, secure latches	RMS		2
6.18	Verify interfaces	REMOTE		30
6.19	Release RMS & move to Life Sciences Payload	RMS		6
			TOTAL	174
7.0	DEPLOY LIFE SCIENCE PAYLOAD	RMS		
7.1	Adjust position & alignment	RMS		2
7.2	Repeat 6.12 - 6.18 for Life Science Payload		TOTAL	71
8.0	DEPLOY EARTH OBSERVATION PAYLOAD	RMS		
8.1	Release RMS & move to short payload beam at SP parking port	RMS		6
8.2	Adjust position and alignment	RMS		2
8.3	Attach RMS to beam grapple fixture	RMS		2
8.4	Release parking port latches	AUTO		1
8.5	Move beam to Central Module +X port	RMS		20
8.6	Adjust position & alignment	RMS		2
8.7	Berth beam to +X port, secure latches	RMS		2
8.8	Release RMS and move to Earth Observation pallet	RMS		6
8.9	Repeat 6.12-6.18 for pallet (mount to short beam)	RMS		71

NO.	TASK/SUBTASK	PRIME MODE	REMARKS	TIME (MIN.)
8.10	Release RMS and move to MSP (or Central Module) grapple fixture	RMS		7
8.11	Adjust position & alignment	RMS		2
8.12	Attach RMS to grapple fixture & verify	RMS		2
8.13	Verify all MSP & payload system	REMOTE	Verification time assumed	120
8.14	Release Orbiter berthing port latches	AUTO		5
8.15	Move MSP to deployment position	RMS		10
8.16	Release MSP	RMS		2
8.17	Move RMS to cradle position			5
8.18	Cradle RMS power down			11
8.19	Checkout all MSP & payload systems	REMOTE	Checkout time assumed	120
			TOTAL	396
			FLIGHT 3	641
	- DEORBIT -			

SAMSP ASSEMBLY COST ESTIMATES

- o RMS
- o RMS WITH EVA

ITERATION NO. 1
- RMS ONLY

LSS Assembly Cost Estimating Work Sheet

COST ELEMENTS	COST ($)
1.0 FLIGHT OPERATIONS	
- Standard Flight Charge	
o Transportation Charge	139,320,000
o Use Fee	0
- Optional Flight Services	
o Spacelab Pallets	7,657,440
o Additional RMS	0
o OMS Delta-V Kit	0
- Optional Payload-Related Services	
o EVA (Includes MMU)	0
o Payload Specialist & Training	1,161,000
o Additional Days On-Orbit	0
o Payload Revisit	1,548,000
o POCC	0
o Launch Site Services	0
2.0 LABOR (Covered in charges for EVA, Payload Specialist & POCC)	
3.0 CREW SUPPORT EQUIPMENT	
- EVA Crew Aids	
o Handrails	
o Foot Restraints	
o Tethers	
o Lights	
o Cameras & Monitors	
o Portable Work Stations	
- EVA Tools	
o Powered	
o Manual	
- Procedures & Checklists	41,600

LSS Assembly Cost Estimating Work Sheet (Continued)

COST ELEMENTS	COST ($)
4.0 LSS EQUIPMENT	
- Beams & Columns*	_____
- Joints & Unions*	_____
- Assy. Jigs & Fixtures*	_____
- Assy. Aids & Tools*	_____
- Special RMS End Effector	_____
- Automated Devices	_____
- Automated Device Materials	_____
- Remote System Launch & Return	_____
- Remote System Communications	_____
- Remote System Ground Support	_____
- Remote System Use Cost	_____
- Remote System R&D Cost	_____
- Remote System Production Cost	_____

TOTAL ASSEMBLY COST $243,400,040

* Include if costs are unequal for various assembly modes.

ITERATION NO. 2
- RMS WITH EVA HELP

LSS Assembly Cost Estimating Work Sheet

COST ELEMENTS	COST ($)
1.0 FLIGHT OPERATIONS	
- Standard Flight Charge	
o Transportation Charge	
o Use Fee	
- Optional Flight Services	
o Spacelab Pallets	
o Additional RMS	
o OMS Delta-V Kit	
- Optional Payload-Related Services	
o EVA (Includes MMU)	928,800
o Payload Specialist & Training	
o Additional Days On-Orbit	1,548,000
o Payload Revisit	
o POCC	
o Launch Site Services	
2.0 LABOR (Covered in charges for EVA, Payload Specialist & POCC)	
3.0 CREW SUPPORT EQUIPMENT	
- EVA Crew Aids	
o Handrails	
o Foot Restraints	
o Tethers	
o Lights	
o Cameras & Monitors	
o Portable Work Stations	
- EVA Tools	
o Powered	
o Manual	
- Procedures & Checklists	

LSS Assembly Cost Estimating Work Sheet (Continued)

COST ELEMENTS	COST ($)
4.0 LSS EQUIPMENT	
- Beams & Columns*	_____
- Joints & Unions*	_____
- Assy. Jigs & Fixtures*	_____
- Assy. Aids & Tools*	_____
- Special RMS End Effector	_____
- Automated Devices	_____
- Automated Device Materials	_____
- Remote System Launch & Return	_____
- Remote System Communications	_____
- Remote System Ground Support	_____
- Remote System Use Cost	_____
- Remote System R&D Cost	_____
- Remote System Production Cost	_____

TOTAL ASSEMBLY COST $2,476,800(1)

* Include if costs are unequal for various assembly modes.

(1) Additional cost to basic MPS assembly cost, Iteration No. 1.

APPENDIX B

EVA DESIGN AND OPERATIONS GUIDELINES

LESSONS LEARNED THROUGH ZERO GRAVITY SIMULATION

1.0 INTRODUCTION

The following guidelines and recommendations are provided as an output of many large space structures (LSS) zero-gravity simulations (conducted since 1975). The majority of the simulations were conducted in the MSFC Neutral Buoyancy Simulator, with several additional tests performed aboard the NASA Zero G aircraft. All tests were performed after Skylab and, in some cases, verify the lessons learned during the Skylab EVAs. The enclosed data, though derived from LSS simulations, is also applicable to Space Stations and other manned programs.

2.0 HARDWARE DESIGN GUIDELINES

2.1 Structural Elements

A long column (up to 30 ft) can be manipulated by an EVA crewman in a foot restraint with a tip placement accuracy of ± 1 in. in the up/down left/right directions.

Opposed jaw end effects on a remote manipulator arm are less than optimal for handling columns due to rotational forces exerted by the jaws during grasping.

Triangular beams fabricated from .016 in. aluminum and the associated joints are difficult for EVA crewman to handle and are susceptible to damage during assembly. Likewise, sharp edges can damage pressure suit gloves.

Latching of from three to eight latches on each joint on the fabricated beam (59 in., each side) is not possible from one foot restraint location and requires crew translation over the structure before it is rigidized by the joints. This can lead to damage to beams and joints.

Graphite/epoxy columns are easily damaged during assembly simulation by inadvertent contact with the EVA crew, especially from side loads.

EVA crewmen and structural components should be tethered during all assembly operations.

2.2 Connectors and Joints

Locking mechanisms for structural joints should have positive visual indication of locking.

Ball/socket insertion is possible from 15 ft away if alignment guides are provided on the socket and if the crewman is secured in foot restraints.

Different types of similarly appearing LSS joints should be color coded to prevent confusion.

Ball/socket joints are less sensitive to structural alignment than other types of joints and may result in lower assembly times.

Manual dexterity of suited crewman is limited. Connectors and joints should be designed so tactical feedback and fine manipulations are not required.

Locking devices should be color coded to indicate lock/unlock status.

"Sensitivity to structural alignment" is deemed an important consideration for connector design because it has been determined in neutral buoyancy testing that connector segments require some free play when initially mated in order to prevent overloading of the partially made connector by the operator or by the structure members. The less the flexibility between components during mating and demating, the greater is the risk of damaging or failing the connector.

A connector should be assembled in a two-step process. The components should be initially restrained together, but with alignment flexibility among the components. Once structure final alignment is complete, the connector components should be lockable.

Joints or connectors should be completely safe for crew operation. A design goal should be that no stored energy shall exist in any of the components prior to, during, or following mating of components. If stored energy components do exist, the energy level should be kept to a minimum.

Connectors requiring mating by a crewman should be hand-operated without the necessity of tools. Likewise, release of the device should be by hand, or, at the most, a simple tool. Assembly should require one hand only. Connector mating should occur without the need for additional crew restraints or assembly aids.

Components should be attachable without critical alignment being a requirement. As a design goal a connector should be capable of being made with limited or no visual access.

Since pressure-suit gloves are very bulky and difficult to operate, a connector should require very low effort by the crewman to attach the components.

The crewman should have a positive indication that the connector has been mated, through feel, visual access or both.

If a connector has a cluster of similar components, it should be immediately obvious to the crewman which components properly mate.

Design consideration should be given to transporting groups of connectors so that they can be easily controlled without harming the crewman or damaging either the connector or the surrounding hardware, and be removable from the storage apparatus in order of need.

Connector operation should be intuitively obvious, and require minimal crew training.

Forethought should be given to connector design if the connector will be exposed to multiple cycles or harsh environments, such as chlorinated water. Data gathered from the test environment or as a result of test conditions may not be directly applicable to one-time assembly in space, resulting in over design.

2.3 Assembly Aids

Remote manipulators and EVA capabilities are complimentary to each other.

Strut restraint devices should permit easy removal/stowage of struts by a restrained crewman using one hand. Individual struts should be presented to the crew in order of use.

It is possible for the EVA crew to install portable grapple fixtures for interfacing with remote manipulators. Such devices reduces hardware envelope and complexity. This is especially useful for hardware that may be jettisoned as part of a contingency task such as Solar Array jettison on Space Telescope.

Storage provisions are required for all loose EVA equipment.

Assembly jigs which mechanically locate and position connectors at an EVA worksite can increase assembly ease and accuracy and reduce damage potential to struts.

2.4 Crew Restraints

Workstation geometry should comply with suited crewman reach data provided in MSFC-STD-512A or similar EVA man/system documentation.

Loop leg restraints and waist restraints do not give adequate restraint for LSS assembly operations. Standard EVA foot restraints are preferable.

Foot restraints should be located at each assembly work site and should position the crewman at an optimum position for the assembly tasks. A goal is to permit the crewman to perform the task without egressing the foot restraints.

Foot restraints should locate crew operated equipment at chest level. The optimum work envelope for both hands is a circle in front of the chest approximately 1 ft in diameter.

Handrails and foot restraints are recommended and most often required for all crew tasks.

Comparison of EMU and A7LB pressure suits does not indicate a substantial increase in workable reach envelope for the EMU suit.

Foot restraints are more effective and safer than handholds-only for large ORU handling.

Analytical (MSFC-STD-512A) determination of foot restraint location followed by zero gravity simulation verification is an effective method of locating foot restraints in an optimum configuration.

One restraint method, stabilization of one EVA crewman by a second crewman is marginal for EVA tasks. Permanent or portable crew restraints should be provided for planned EVA tasks.

All accessible hardware within reach of crewman may be used for handholds. All equipment near EVA workstations and translation paths should be designed for crew loads or should be guarded.

Properly located handholds are needed for foot restraint ingress and egress.

As a goal, several EVA tasks should be performed from one foot restraint location to minimize number of foot restraint or attachment devices.

Handrails are required adjacent to all crew operated mechanisms.

2.5 Tools

EVA tasks that do not require use of hand tools are preferable to tasks that do.

Counterclockwise rotation of shafts, fasteners or other crew operated mechanisms should result in a loosening, removal or jettison of the equipment.

All tool operated fasteners or mechanisms should be sufficiently strong to take shear side loads as well as rotation torques since one hand wrench operations are expected.

Ratchet crank mechanisms are an effective method for an EVA crewman to extend/retract booms and antennas. For ratchet wrench operation the work area should be designed so that the ratchet is approximately at the crewman's chest height. Foot restraints are desirable but not absolutely required if handrails are properly arranged to allow adequate resolution of the forces resulting from the cranking motion. Any retractable or jettisonable equipment that is subject to damage if touched by the crewman (e.g., solar array panels) should be jettisoned/retracted prior to EVA operations if at all possible.

Mating of socket or extension to ratchet should be positive and not subject to accidental release.

Ratchet drive receptacles on sockets or extensions should have ball detent holes or grooves in all four positions to insure that the ratchet is always locked in position. Clearance should be provided for ratchet strokes of approximately 35 degree arcs and the power stroke should be a pulling motion for the most likely task. For example, retracting a failed boom element is a more likely task than extending a failed element. Therefore, the ratchet mechanism should be designed so a pulling motion is required to retract the element.

For failed-extended equipment jettison, cutting tasks are feasible but highly undesirable because crew effort required and the potential damage from sharp edges. If possible, designers should consider some manual release technique for extended elements to avoid the possibility of cutting operations. For safety reasons, during an jettison operation, the crewman should be tethered to some stable structure in addition to being in foot restraints. A crewman can effectively maneuver and jettison large massive equipment if handrails or other structure suitable for gripping with the EVA glove are positioned to allow application of the forces through the center of mass.

Sockets mounted to extensions cover 6 in. long should have wobble drives that allow at least ± 10° misalignment. Sockets should be spring loaded to center position.

Fasteners should have 8-10 in-oz back drive torque to facilitate ratchet wrench operations.

Fasteners should have hard stops at the fastened and loosened positions. Crew should not be required to count the number of turns to determine status of fastener.

25 ft-lbs is acceptable for 3-5 turns if adequate handholds and a foot restraint are provided (using a ratchet wrench with a 14 in. handle).

A power tool is recommended to make Orbital Replacement Unit (ORU) changeout tasks faster and easier for the crew and to minimize the number of foot restraints because of an extended useable work envelope.

A crewman can operate contingency hardware using an EVA ratchet wrench requiring a high number of turns (e.g., 130) but will experience fatigue, glove wear, wrist chaffing and long task time (e.g., 70 min.).

2.6 Attachable Hardware

EVA installed equipment should be designed so critical alignment and mating are not required by the EVA crew.

Fluid recharge EVA tasks can be almost trivial if adequate crew access, crew restraint and EVA compatible support equipment are provided.

Large (e.g., 4' x 4' x 1.5') modules can be exchanged by the EVA crew with RMS assistance. Likewise, two pressure suited subjects can handle a mass of 1500 lbs if no critical or fragile components or mechanisms are exposed to impact forces.

ORU's should have alignment indicators, especially for larger units.

A 1.0 in. hex fastener height for a wrench socket interface is preferable to a 0.5 in. hex height. Taller hex prevents tool from slipping off fastener.

A visual indicator should be used to indicate lock/unlock status of module fasteners.

Solar array blanket box changeout can be accomplished in approximately 15 min. exclusive of crew and equipment transfer. Two man operations are preferred for solar array box changeout.

Positive indication of release should be provided for jettison hardware.

For failed extended payload elements, retraction operations are preferred over jettisoning operations, although the forces and total EVA time required for retraction operations might necessitate going to a jettison mode.

Protective covers should be used on modules susceptible to damage or contamination and equipment that could injure the crew.

Alignment/insertion guides should be used on all crew installed equipment.

Crew operated latches should be spring loaded to "open" position until locked by crew.

Access doors should have positive stops in full-open position and be secured open until closed by the crew.

ORU's should be held in place by a temporary storage/locator device while crew secures permanent lock/latches/fasteners.

All manual electrical and fluid connectors should have back shells with alignment marks.

Index marks should be provided on jettison clamps and should be visible from the anticipated EVA work position.

Handles and tether rings are required for all ORU's and equipment that could be jettisoned.

Labels are required on all manual override mechanisms to indicate rotation convention and number of turns required to release or attach the equipment to its mounting provisions.

2.7 Crew Mobility Aids

Handholds should be located adjacent to hardware operated by the EVA crew (e.g. connectors and joints).

A track-mounted mobile workstation can accomplish some crew translation and restraint requirements for some LSS assembly tests and reduce time for translation and equipment handling.

Assembly techniques that require only limited, simple, routine tasks from the EVA crew can lead to rapid assembly of truss structure when using the mobile workstation (e.g., 38 seconds per strut).

The RMS Manipulator Foot Restraint is a valid approach for solar array or box changeout if the RMS not required for equipment handling.

Coordination between an EVA crewman and the remote manipulator operator are possible using verbal directions from the EVA crewman.

2.8 Translation Routes

All hardware along the EVA translation path should have sharp edges and corners removed to prevent wear to the pressure suit or damage to the hardware being transferred.

Handrails in transfer tunnels should be 180° apart to permit translation by two crewmen.

Tunnel lights should be at least 15 in. away from tunnel handrails to prevent elbow contact by translating crewmen.

3.0 OPERATIONS GUIDELINES

Slow rate of travel of the NBS remote manipulator negates effect of water drag during underwater simulations. Approximating Shuttle RMS velocities with simulation manipulators meets this criterion.

Two double-cell deployable modules of 10 ft struts can be assembled in 45 min. using two EVA crewmen and the remote manipulator. Modules of smaller length struts can be assembled in less time.

The remote manipulator is very time consuming relative to EV crew performance for assembly of individual LSS elements. If time is the only consideration, EV assembly is the more efficient.

An EVA crewman can translate along LSS structural elements with up to four columns attached to one wrist or two columns attached to each wrist, provided the structural elements or surrounding equipment cannot be damaged by loosely restrained items.

Assembly procedures should minimize crew translation. Crew movement along a beam restrained on only one end can overload and damage the restraining connector or the beam.

Deployable structures are preferred over erectables for ease of assembly and assembly time required.

Gloved hand access should be provided for all crew operation of manual equipment.

One-hand operation is preferred over two-handed operation of EVA equipment

Where visibility is limited and visual alignment is necessary, two EVA crewmembers are required.

1. REPORT NO.	2. GOVERNMENT ACCESSION NO.	3. RECIPIENT'S CATALOG NO.
NASA CR-3751		

4. TITLE AND SUBTITLE	5. REPORT DATE
Analysis of Large Space Structures Assembly - Man/Machine Assembly Analysis	December 1983
	6. PERFORMING ORGANIZATION CODE
7. AUTHOR(S)	8. PERFORMING ORGANIZATION REPORT # H-83-03
9. PERFORMING ORGANIZATION NAME AND ADDRESS ESSEX CORPORATION Huntsville Facility 3322 South Memorial Parkway Huntsville, Alabama 35801	10. WORK UNIT NO. M-429
	11. CONTRACT OR GRANT NO. NAS8-32989
12. SPONSORING AGENCY NAME AND ADDRESS National Aeronatics and Space Administration Washington, D. C. 20546	13. TYPE OF REPORT & PERIOD COVERED Contractor Report
	14. SPONSORING AGENCY CODE

15. SUPPLEMENTARY NOTES

Technical Monitor: Jack W. Stokes, Jr., George C. Marshall Space Flight Center, AL.

16. ABSTRACT

This document outlines procedures for analyzing large space structures assembly via three primary modes: manual, remote and automated. Data bases on each of the assembly modes and a general data base on the shuttle capabilities to support structures assembly are presented. Task element times and structure assembly component costs are given to provide a basis for determining the comparative economics of assembly alternatives. The lessons learned from simulations of space structures assembly are detailed in Appendix B.

17. KEY WORDS		18. DISTRIBUTION STATEMENT
Assembly Costs	Teleoperation	Unclassified - Unlimited
Automated Assembly	Remote Sys Assy	
EVA Assembly	Space Deploy. Sys.	
Human Factors	Space Erectable Sys.	
Large Space Platforms	Space Fabrication	
Large Space Structures	Shuttle Payload	
Large Space Systems	Capabilities	Subject Category 12

19. SECURITY CLASSIF. (of this report)	20. SECURITY CLASSIF. (of this page)	21. NO. OF PAGES	22. PRICE
Unclassified	Unclassified	171	A08

For sale by National Technical Information Service, Springfield, Virginia 22161

NASA-Langley, 1983

National Aeronautics and
Space Administration

Washington, D.C.
20546

Official Business
Penalty for Private Use, $300

SPECIAL FOURTH CLASS MAIL
BOOK

Posta
Nati
Spac
NAS

LANGLEY RESEARCH CENTER
3 1176 00189 6712
U.S.MAIL

NASA

POSTMASTER: If Undeliverable (Section 158 Postal Manual) Do Not Return