NASA/TM– 97–206310

Investigation of Springback Associated With Composite Material Component Fabrication

(MSFC Center Director's Discretionary Fund Final Report, Project 94–09)

M.A. Benzie
Marshall Space Flight Center, Marshall Space Flight Center, Alabama

November 1997

The NASA STI Program Office…in Profile

Since its founding, NASA has been dedicated to the advancement of aeronautics and space science. The NASA Scientific and Technical Information (STI) Program Office plays a key part in helping NASA maintain this important role.

The NASA STI Program Office is operated by Langley Research Center, the lead center for NASA's scientific and technical information. The NASA STI Program Office provides access to the NASA STI Database, the largest collection of aeronautical and space science STI in the world. The Program Office is also NASA's institutional mechanism for disseminating the results of its research and development activities. These results are published by NASA in the NASA STI Report Series, which includes the following report types:

- TECHNICAL PUBLICATION. Reports of completed research or a major significant phase of research that present the results of NASA programs and include extensive data or theoretical analysis. Includes compilations of significant scientific and technical data and information deemed to be of continuing reference value. NASA's counterpart of peer-reviewed formal professional papers but has less stringent limitations on manuscript length and extent of graphic presentations.

- TECHNICAL MEMORANDUM. Scientific and technical findings that are preliminary or of specialized interest, e.g., quick release reports, working papers, and bibliographies that contain minimal annotation. Does not contain extensive analysis.

- CONTRACTOR REPORT. Scientific and technical findings by NASA-sponsored contractors and grantees.

- CONFERENCE PUBLICATION. Collected papers from scientific and technical conferences, symposia, seminars, or other meetings sponsored or cosponsored by NASA.

- SPECIAL PUBLICATION. Scientific, technical, or historical information from NASA programs, projects, and mission, often concerned with subjects having substantial public interest.

- TECHNICAL TRANSLATION. English-language translations of foreign scientific and technical material pertinent to NASA's mission.

Specialized services that complement the STI Program Office's diverse offerings include creating custom thesauri, building customized databases, organizing and publishing research results…even providing videos.

For more information about the NASA STI Program Office, see the following:

- Access the NASA STI Program Home Page at ***http://www.sti.nasa.gov***

- E-mail your question via the Internet to help@sti.nasa.gov

- Fax your question to the NASA Access Help Desk at (301) 621–0134

- Telephone the NASA Access Help Desk at (301) 621–0390

- Write to:
  NASA Access Help Desk
  NASA Center for AeroSpace Information
  800 Elkridge Landing Road
  Linthicum Heights, MD 21090–2934

NASA/TM–97–206310

Investigation of Springback Associated With Composite Material Component Fabrication

(MSFC Center Director's Discretionary Fund Final Report, Project 94–09)

M.A. Benzie
Marshall Space Flight Center, Marshall Space Flight Center, Alabama

National Aeronautics and
Space Administration

Marshall Space Flight Center

November 1997

Available from:

NASA Center for AeroSpace Information
800 Elkridge Landing Road
Linthicum Heights, MD 21090-2934
(301) 621-0390

National Technical Information Service
5285 Port Royal Road
Springfield, VA 22161
(703) 487-4650

TABLE OF CONTENTS

1. INTRODUCTION 1

2. EXPERIMENTAL APPROACH 2

2.1 Taguchi Designed Experiment 2
2.2 Material Selection 4
2.3 Tooling Configuration 6
2.4 Design Considerations 7
2.5 Bagging Procedures 7
2.6 Part Fabrication 8
2.7 Data Collection 10
2.8 Confirmation Experiment 12

3. DISCUSSION OF RESULTS 14

3.1 Fabrication Problems 14
3.2 Experimental Data 16
3.3 Taguchi Analysis of the Data 18
3.4 Discussion of the Factors 22
3.5 Confirmation Experiment 24

4. CONCLUSIONS AND RECOMMENDATIONS 27

REFERENCES 28

APPENDIX 29

LIST OF FIGURES

1. Different tooling angles as shown on male tools 3
2. Standard male tooling configuration 7
3. Basic vacuum bagging stackup 9
4. Bagged part ready for cure 9
5. Autoclave used for processing 11
6. Oven used for processing 11
7. Tool measurement procedure 12
8. Part measurement procedure 13
9. Data point location mapping diagram 13
10. Standard female tooling configuration 15
11. Closeup of bridging problem in female tooling during layup 15
12. Summary springback data versus run number 17

LIST OF TABLES

1. L_{12} orthogonal array Taguchi test matrix 3
2. Summary of factors and levels for experiment 4
3. Epoxy resin material selection summary 5
4. Bagging materials used for entire test matrix 8
5. Summary springback data 16
6. Relative springback rankings (1=lowest) 17
7. S/N ratio calculation summary 19
8. S/N response table 20
9. Mean response table 20
10. Control factor summary 21
11. ANOVA table for initial matrix 25
12. ANOVA table (Pooled) 25
13. Confirmation run summary and Taguchi analysis 26
14. Raw data for run 1 29
15. Raw data for run 2 29
16. Raw data for run 3 30
17. Raw data for run 4 30
18. Raw data for run 5 30
19. Raw data for run 6 31
20. Raw data for run 7 31
21. Raw data for run 8 31
22. Raw data for run 9 32
23. Raw data for run 10 32
24. Raw data for run 11 32
25. Raw data for run 12 33
26. Raw data for confirmation run 33

LIST OF SYMBOLS

i	sample counter
j	level of the factor
k	runs counter
n	number of factors including in the estimated mean
n_e	effective number of replications
n_j	number runs with factor X at level j
r	sample size in a single trial
S/N	signal-to-noise ratio
SS_e	sum of squares for error
SS_m	sum of squares for mean
SS_t	total sum of squares
V_e	error variance
V_{ep}	pooled error variance
X_j	factor
y_i	sample data point
$\bar{y}$	average of y_i for a given i
$\bar{Y}$	average of all y_i
$\hat{\mu}$	estimated mean
v_e	degrees of freedom for error
v_{ep}	degrees of freedom for pooled error
v_m	degrees of freedom for mean
v_T	total degrees of freedom

TECHNICAL MEMORANDUM

INVESTIGATION OF SPRINGBACK ASSOCIATED WITH COMPOSITE MATERIAL COMPONENT FABRICATION (MSFC CENTER DIRECTOR'S DISCRETIONARY FUND FINAL REPORT, PROJECT NO. 94–09)

1. INTRODUCTION

As the National Aeronautics and Space Administration (NASA) continues its efforts toward a Single Stage to Orbit (SSTO) Reusable Launch Vehicle (RLV), the need for weight reduction is critical. To accomplish this, these vehicles must use advanced materials that possess a multitude of improved properties (lower density, higher stiffness and strength, resistance to damage and moisture absorption, good fatigue resistance, and high temperature stability) compared to conventional aerospace materials. Polymer matrix composites have been used in some primary structural applications with good success, in both military and commercial applications. Aerospace vehicles are beginning to contain more polymer matrix composite structures in order to reduce weight. Recent examples of such hardware can be traced to DC–XA (intertank, LH_2 tank, and LH_2 feedlines) and X–33 (LH_2 multilobe tank, etc.).

As the use of composite materials for space structures continues to increase, the complexity of the designs increase. These designs often include sharp radii and angles which have proven difficult to fabricate on a controlled basis because of a phenomena called springback. Springback was originally a metalworking term to describe the action of sheet metal bent at an angle springing back after forming, caused by residual stress. By contrast, the majority of high-temperature curing composite prepregs spring-in during manufacture. Low-temperature curing prepregs may exhibit springin, springback, or even zero spring. The springback problem in tooling for composites occurs primarily on sharp angles and contours. Springin or springback can cause up to 4° of error on tools and parts. It poses more of a problem on thick parts than thin, mainly because thicker-section parts cannot be forced as easily into shape to conform to the rest of an assembly.[1]

The objective of this research project is to examine some processing and design parameters involved in the fabrication of composite components in order to obtain a better understanding and attempt to minimize springback associated with composite materials. To accomplish this, both processing and design parameters will be investigated. Composite angled panels will be fabricated by hand layup techniques, according to an established Taguchi fractional factorial matrix. Using precision measurement equipment, the fabricated panels will be inspected for springback effects. Major contributing factors will be selected and a confirmation run will be performed. These findings can be used to aid design and manufacturing engineers in the development of future polymer composite hardware.

2. EXPERIMENTAL APPROACH

The experimental method used to determine the significant contributing factors in springback in polymer composite components is presented in this section. First, the design of the Taguchi experiment utilized will be presented, followed by a discussion of supporting details.

2.1 Taguchi Designed Experiment

Robust design, commonly known as Taguchi Methods, was developed in the 1950's by Dr. Genichi Taguchi. Its purpose is to develop products and processes which perform consistently as intended under a wide range of user's conditions. This consistency is achieved by maximizing robustness; meaning, maximize the intended results of a system while minimizing the impact of factors which tend to degrade performance.[2]

Taguchi Methods utilize fractional factorial experiments to investigate the main effects and interactions in a design. The L_{12} Orthogonal Array is a specially designed array in that interactions are distributed more or less uniformly to all columns. The advantage of this design is its capability to investigate 11 main effects, making it a highly recommended array.[3] The conclusions regarding main effects are more robust against confounding in this array, making it an excellent choice for screening. The scope of this experiment is to look at individual factors, not higher ordered interaction effects, making this array an excellent choice. The L_{12} is a Plackett-Burman fractional factorial array.[4] This approach drastically cuts down on the number of trials that must be run for the experiment: from 2^{11}=2,048 trials, down to a total of 12 trials.

Taguchi techniques are intended to achieve optimum performance through the selection of factor levels that are robust against external environmental effects (noise). Intentional noise can also be designed into the test matrix in order to define a larger set of operating conditions. This experiment included a range of fabrication angles in order to provide a larger environment in which robustness could be achieved. Robustness is a product or process that performs consistently on target and is relatively insensitive to factors that are difficult to control.[4] The three different angles chosen cover the typical range observed in composite hardware design: 60°, 90°, and 120°. The male configuration tooling showing all three angles is presented in figure 1. A more detailed discussion of the tooling is presented in section 2.3. Three data points will be taken from each panel, giving a total of nine data points for each test condition. A thorough discussion of the data collection is presented in section 2.7.

Randomization is the cornerstone underlying the use of statistical methods in experimental design.[4] Randomization of the trial run order protects the experimenter from any unknown and uncontrolled factors that may vary during the entire experiment and influence the results. This will prevent a bias in the interpretation of which factors and interactions cause a change in the average of the quality characteristic(s) of interest.[5] The runs designed in this experiment were done in random order to prevent any unintentional biasing in the experiment.

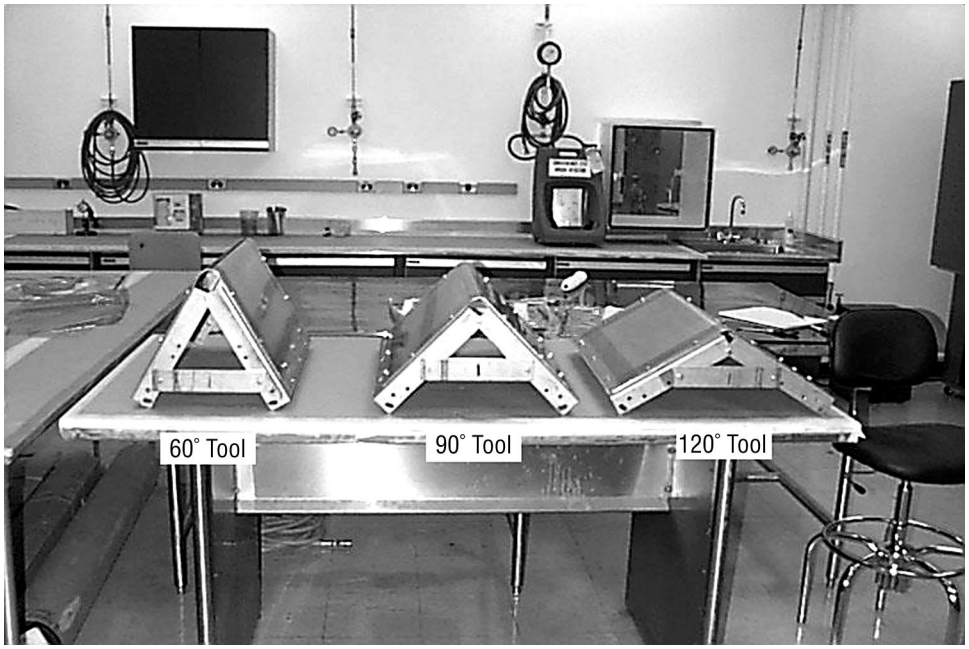

FIGURE 1.—Different tooling angles as shown on male tools.

The Taguchi test matrix designed for this experiment is presented in table 1. This table includes the factor levels and noise conditions for each experimental run. A run is defined as the fabrication of three panels at angles of 60°, 90°, and 120°, at the given levels for each factor from which three data points from each panel will be collected. The 12 runs will be done in random order. The empty columns on the right side of the table are reserved for data collection.

TABLE 1.—*L_{12} orthogonal array Taguchi test matrix.*

												N_1–60°			N_2–90°			N_3–120°		
Run/Factor	**A**	**B**	**C**	**D**	**E**	**F**	**G**	**H**	**I**	**J**	**K**	**1**	**2**	**3**	**1**	**2**	**3**	**1**	**2**	**3**
1	1	1	1	1	1	1	1	1	1	1	1									
2	1	1	1	1	1	2	2	2	2	2	2									
3	1	1	2	2	2	1	1	1	2	2	2									
4	1	2	1	2	2	1	2	2	1	1	2									
5	1	2	2	1	2	2	1	2	1	2	1									
6	1	2	2	2	1	2	2	1	2	1	1									
7	2	1	2	2	1	1	2	2	1	2	1									
8	2	1	2	1	2	2	2	1	1	1	2									
9	2	1	1	2	2	2	1	2	2	1	1									
10	2	2	2	1	1	1	1	2	2	1	2									
11	2	2	1	2	1	2	1	1	1	2	2									
12	2	2	1	1	2	1	2	1	2	2	1									

The factors to be tested in this experiment were chosen based on a literature review and experience gained from previous composite material programs worked at NASA Marshall Space Flight Center. These factors and the associated levels included in the test matrix are summarized in table 2.

TABLE 2.—*Summary of factors and levels for experiment.*

Factor		Level 1	Level 2
Cure Temperature	A	250 °F	350 °F
Resin Flow	B	Low	High
Fiber Modulus	C	Low	High
Tool Material	D	Alum	Steel
Radius Orientation	E	Male	Female
Tool Radius	F	0.25 Inch	1 Inch
No. Plies	G	8	24
Layup	H	(0°/90°)s	(0°/+45°/–45°/90°)s
Pressure Intensifier	I	Off	On
Resin Content	J	Bleed	No Bleed
Cure Method	K	Oven	Autoclave

Several of the factors are directly related to the material selection (factors A, B, and C). The rationale and background for these factors are presented in section 2.2. Tooling considerations are a key element in the processing of polymer composite hardware. The tooling configuration and its related factors (D, E, and F) are outlined in section 2.3. Performance requirements for hardware often drive several design features. Rationale for factors G and H are presented in section 2.4. Finally, processing is the single most important element in producing quality composite hardware. Several processing-related factors (I and J) are discussed in relation to vacuum bagging in section 2.5. Also, fabrication control for the panels and another processing-related factors (K) in this experiment are outlined in section 2.6.

2.2 Material Selection

The use of several different polymer composite materials were considered. Polymer composite materials consist of two distinct components which work together to achieve the resultant desired material. The first of these two materials is the matrix binder, or resin. Many resins are available, and the choice of which to use is based on the application and/or environment which the hardware to be built will be subjected. Epoxies are the most commonly used polymer resin system, primarily because of their use in processing, cost, and temperature usage range. Bismaleidies, phenolic, and polyimides are examples of other resin systems that are used for higher temperature applications such as leading edges, aerostructures, and nozzles. Similar to the fiber selection, only epoxy resins were selected for use in this experiment for consistency purposes. The selection of epoxy resins also makes the results from the experiment more transferable to the largest percentage of composite hardware being built in industry.

There are different formulations of epoxy resins, with the selection of which to use based on the desired performance characteristics. Epoxy resins are available with two different cure temperatures, 250 °F and 350 °F. Thermal characteristics of the resin and fiber interface play a key role in springback due to the thermal mismatch. Resins at both of these temperatures will be used to distinguish if the curing temperature difference has an effect on springback. This is factor A in the experiment.

Just as these are different epoxies that cure at different temperatures, the flow characteristics of these resins can also vary. The resistance to flow is factor B in the experiment. The levels chosen for this factor are simply high flow and low flow, based on a relative order of magnitude viscosity difference between the resins. Table 3 is a summary of the resins chosen for this experiment to satisfy the requirements for factors A and B. The resin designations are that from the vendor, Fiberite.

TABLE 3.—*Epoxy resin material selection summary.*

Material Selection Summary		Factor B	
		Low Flow	High Flow
Factor A	250 °F Cure	949	7740
	350 °F Cure	977–2	938

The second of these two materials is the fibers. Common fibers used are graphite, fiberglass, and Kevlar™. The material properties, availability, and cost of graphite fibers have made their usage the industry standard. Graphite fibers were selected for use in this experiment for consistency and also to preclude the test matrix from becoming unreasonably large. Design requirements drive the selection of which graphite fibers to utilize. The loads on a given composite part drive the stress analysis. It is at this point the required strength of the fibers is determined. In order to cover a wide range of potential design applications, this experiment will investigate both low and high modulus fibers. The low modulus fibers are very widely used because of their relative cost. IM7, manufactured by Herculus, is one of those very widely used fibers. High modulus fibers are very expensive and are typically only used when dictated by design requirements. M55J, manufactured by Toray, is a commonly used high modulus fiber. These fibers will be designated by low modulus and high modulus in factor C.

Polymer composite materials can be obtained in two forms, the choice being dependent on the processing applications to be used in the fabrication of subsequent composite hardware: resin and dry fibers, or fibers preimpregnated with resin, called prepreg. Prepreg can be custom run or obtained “off-the-shelf” by vendors using a standard set of specifications. These specifications include physical properties such as resin content and fiber areal weight. For consistency throughout this experiment, all materials chosen were purchased as prepregs with standard specifications.

Prepregs themselves can also be obtained in several forms, also dependent upon the processing techniques to be used. Woven fabric and unidirectional tape are the two most common forms utilized, and both are produced on rolls and available in a variety of roll widths. Fabrics can be custom designed, based on the application, to be woven with a particular tow bundle size as well as with a particular weave. Woven fabrics are the desired choice for most applications involving hand layup because of their workability into desired shapes and along complex contours of tooling surfaces. Unidirectional tape is preimpregnated fibers aligned in a single direction with a uniform thickness. This experiment used a total of eight different materials (fiber/resin combinations), to be discussed later. The availability of each of these eight materials in an identical woven configuration would have required an extensive amount of setup costs and lead time from the manufacturer. These factors were unreasonable, given the scope of this experiment. Therefore, unidirectional tape in 12-inch-wide rolls were purchased of all eight materials, using a standard set of processing specifications. These specifications included resin content, 32 to 38 percent, and fiber areal weight, 140 to 150 G/M E2.

2.3 Tooling Configuration

The material selected for tooling is dependent on the requirements of the composite component. Materials commonly used include metals (invar, steel, aluminum), nonmetals (composites, monolithic graphite, rubber, wood), and one-time use materials (foam, sand, salt, and plaster). The rationale in defining the lowest cost tooling approach should center around the requirements of the component to be built on the tool. A thorough understanding of the geometry, tolerances, surface finish, and fabrication process of the composite component is required to design low-cost, efficient tooling.[6]

The tooling materials were chosen for this experiment based on two key considerations—cost and time. The parts to be made in this experiment are not intended to be used for any subsequent component production, nor is this tooling intended to be used for a large production run of parts. Therefore, the tooling should be inexpensive and easy to fabricate. The angles to be fabricated in this experiment could easily be laid up on bent metal tooling. The metal tooling could be easily made in a bending fixture and supported with a frame for stability. Readily available materials at the time of fabrication were 2219 Aluminum and 304 Stainless Steel. These materials have a key inherent property difference—thermal expansion. The inclusion of this difference is factor D in the cooling material experiment.

A key element in composite part design is the tolerance fit-up of the part in the subsequent assembly. Composite components are fabricated so that critical interfaces are on the tooling surface of the part for tolerance control. This design consideration determines the radius orientation of the tooling for the part. Male tooling is more common and easier to layup on, but female tooling is also sometimes used. Female tooling often presents processing problems, which will be discussed later. The tooling radius orientation is factor E in this experiment.

Another key consideration in composite part design is the radius in the angle to be fabricated. This experiment will include a tight radius, 0.25 inch, and a shallow radius, 1 inch in factor F. The radius chosen in the design, however, is often dictated by the limitations of the chosen manufacturing process.

The tooling was designed such that each composite part made would result in approximately a 12- by 12-inch angled panel. The basic concept is depicted in figure 2. Several variations to this basic configuration were utilized in the test matrix, based on the previously discussed factors. Each piece of tooling, however, does include several common features. Each tool has two basic components: the layup surface and the frame. The layup surface was made by bending a piece of sheet metal with dimensions 24 by 24 inches. It also has a smooth pit-free surface for the layup of composite prepreg. The $^1/_8$-inch thickness of the surface plate is the same for all tools. This thickness was chosen thin enough so that the tooling would heat uniformly, yet thick enough to provide a firm layup surface. Holes around the perimeter of the plate are used to fasten the plate to the frame, and the frame also has a stabilizer bar across each side. These features help keep the tool rigid and prevent unwanted warpage, bending, or thermal cycling

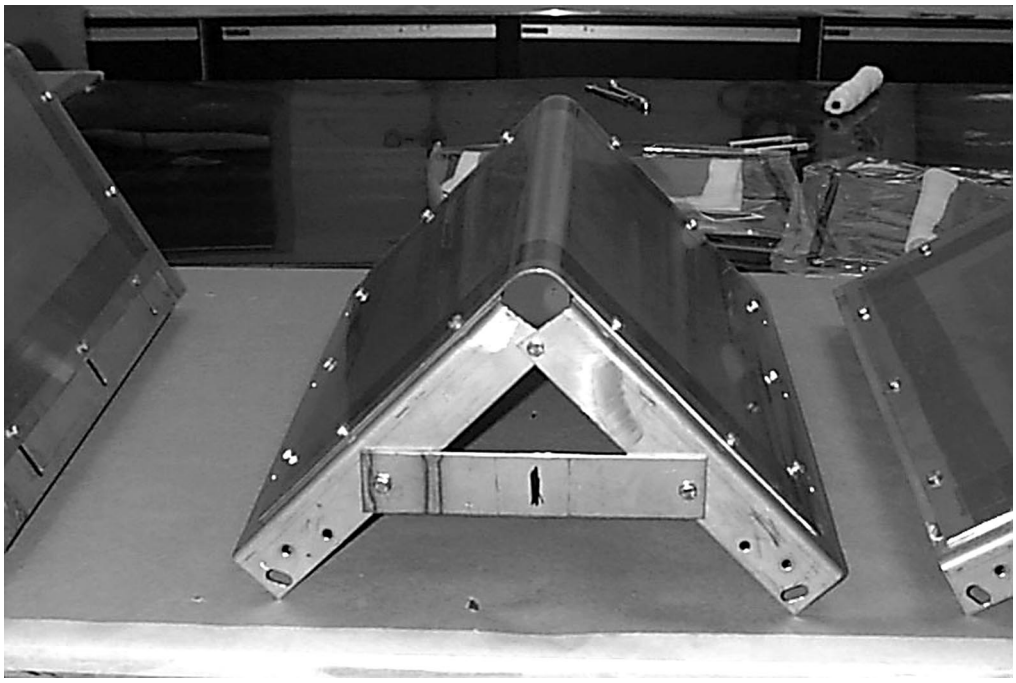

FIGURE 2.—Standard male tooling configuration.

2.4 Design Considerations

One of the most desirable properties of composite materials is their very low weight-to-strength ratio. This allows for very thin, lightweight parts to be used for structural applications. Also, as a result of the fabrication process of composite parts, the designed strength is tailorable based on the number of plies in the design. Factor G includes two different panel thicknesses—a thin panel made by using only 8 plies and a thicker panel using 24 plies. Each ply has a thickness of approximately 0.005 inch, resulting in final panel thicknesses of about 0.040 inch (8 plies) and 0.120 inch (24 plies). Most parts used in the aerospace industry fall within these thicknesses.

Another key ingredient in the design of a composite part is that the layup angle of each ply has to be controllable. Factor H includes two fundamental stacking sequences for composite fabrication; (0°/90°)s and (0°/+45°/–45°/90°)s. Each stack is symmetric so that no springback is intentionally designed in the part. Using an unbalanced stack, the part can be designed to purposefully spring. The goal of this experiment, however, is to minimize springback.

2.5 Bagging Procedures

The vacuum bagging of a composite part plays a major role in the processing of composite material hardware. The vacuum bag has the ability to evenly apply pressure to conform prepreg material to complex shapes. With the incorporation of a vacuum pump, pressure of 14.7 lb/in^2 (2,000 lb/ft^2) can be attained, which, this allows for predictable and consistent pressure application. The constant vacuum pressure in turn provides control of part thickness and assistance in core placement and bonding. Additionally, laminate strength directly relates to the ratio of fiber content to resin. Resin is the weakest

and, therefore, key link. The main purpose of the resin is to bind the load-carrying fibers together. The even distribution of vacuum pressure aids in a more precise control of the fiber/resin ratio.[7]

In order to provide a consistent testing environment for this experiment, all the composites panels were fabricated using the same basic bagging techniques and the same bagging materials. This was an essential element in the processing of these parts to ensure that they were processed consistently for better comparison. The bagging materials used for the processing of all the parts is summarized in table 4.[8] All the bagging materials were obtained from a single vendor source (Airtech International, Inc.), and each type of material used came from only one manufacturing lot, thereby reducing any additional noise into the experimental environment. All materials were chosen to withstand, at a minimum, the highest temperature cure in the test matrix, 350 °F.

TABLE 4.—*Bagging materials used for entire test matrix.*

Material	Designation	Comments
Vacuum Bag	Ipplon DP 1000	Nylon, 0.002-Inch Thickness, 390 °F Usage
Breather Cloth	Ultraweave 1324	Nylon 6-6 Nonwoven, 13 oz/yd^2,450 °F Usage
Solid Release Film	A4000R	0.002-Inch Thickness, 500 °F Usage
Pressure Intensifier	Airpad	Uncured Nonsilicone Rubber
Bleeder Cloth	Bleeder Lease C	Fiberglass, 0.009-Inch Thickness, 800 °F Usage
Porous Release Film	A4000RP	0.045-Inch Holes, 0.25-Inch Centers, Similar to A4000R
Sealant Tape	GS–213	400 °F Usage
Mold Release	Release-All 30	Liquid, 500 °F Usage

The basic bagging stackup is depicted in figure 3. Based on the test matrix, two variations to this basic bagging technique were utilized, noted by (*) and (**). The (*) materials were used only when the pressure intensifier was to be used, factor I. Pressure intensifiers are used in order to provide more consistent resin flow and compaction in radiused areas. Inconsistent resin flow can lead to an increase in void content, porosity, and the potential for delaminations. The (**) materials were used only when a “bleed” stack was to be used, factor J. Resin is bled out of the prepreg during cure to control the resin content in a composite part. Vacuum ports were utilized on both sides of the tooling in the breather cloth area to serve as escape paths for air inside the bag. A bagged part ready for cure is shown in figure 4.

2.6 Part Fabrication

Each composite part was fabricated according to the factors presented in the test matrix. The processing was controlled to ensure that each part was fabricated under exactly the same conditions; the parts were fabricated in the same environmentally controlled laboratory by the same two people. These controls helped to eliminate any potential source of environmental noise that could enter the experiment and influence the data. It is not always desired to eliminate all noise from an experiment, though; one controllable noise factor was designed into this experiment. Three panels were made for each test condition, as described in section 2.1: 60°, 90°, and 120°. This provided an envelope under which the experiment could achieve robustness across a larger set of operating conditions.

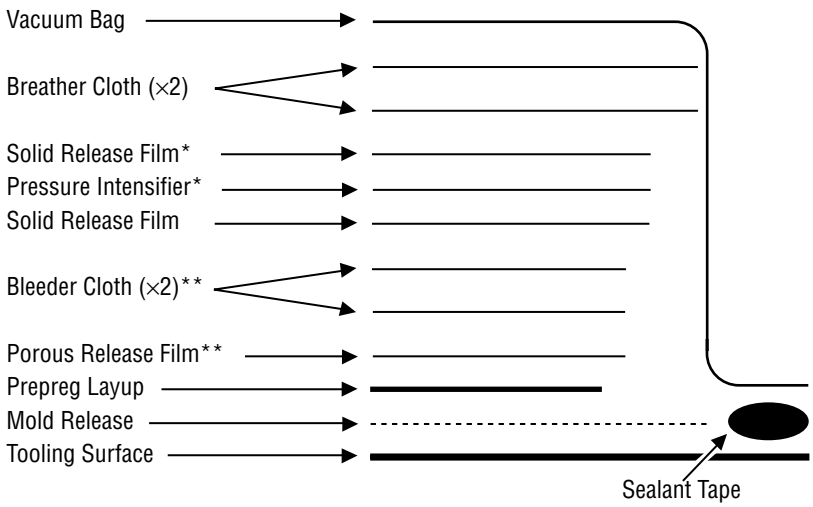

FIGURE 3.—Basic vacuum bagging stackup.

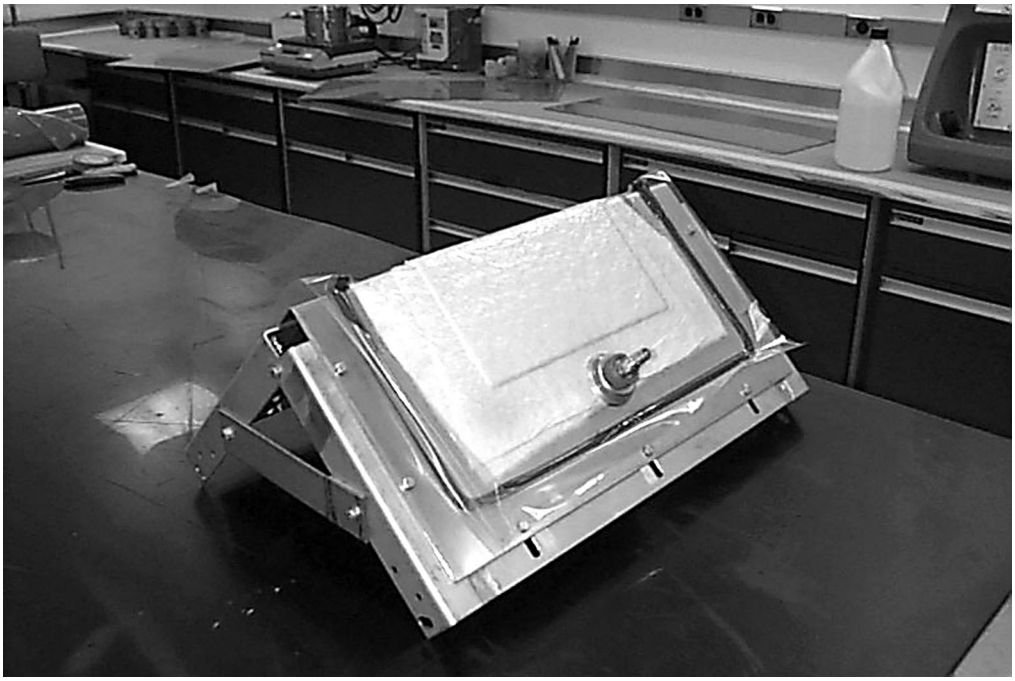

FIGURE 4.—Bagged part ready for cure.

Prior to the layup of the composite parts, the tools had to be prepared. The bolts were tightened to ensure a stable tool. Each tool was then cleaned with solvents to remove contaminates from the tooling surface. The outside perimeter of the layup surface was covered with 2-inch-wide Teflon™ tape. This tape protected the area of the tool where the sealant tape will be located from being coated with mold release. The remainder of the tool was then treated with liquid-based mold release. The mold release prevents the resin in the prepreg from permanently bonding to the tooling surface, allowing for the part to release from the tool after cure.

All prepreg materials must be stored in cold storage to prevent acceleration of the resin cure process. Prior to the layup of any part, the prepreg was taken out of the freezer and allowed adequate time in laboratory conditions to thaw. The plies required, per the test matrix, were then cut using templates. The use of templates to cut the plies ensures that all plies for the parts are cut the same size and at the exact required angles. These templates were made from thin aluminum stock and coated with Teflon™ tape. The tape served to prevent resin from transferring to the template which causes the template to become very tacky, thus inhibiting its efficient use. The plies were laid up centered on the tool, per specifications in the test matrix.

During layup, the bulk factor of the layup was controlled. Extreme care was used to ensure that there were no air bubbles, wrinkles, or folds in the prepreg as each ply was positioned on the tool or over a previous ply. Bridging or looseness between plies, which could create wrinkles or bridging during cure, was not allowed. Debulking was used extensively during the layup to aid in controlling the bulk factor. Debulking is the process of a minimal vacuum bag on the part during layup to ensure adequate compaction of the prepreg. This bagging stack included a porous release film, breather cloth, and a vacuum bag. Debulks were always performed after the 1st, 8th, 16th, and 24th plies for a minimum of 15 minutes. If the material was particularly nontacky, additional debulks were also done after the 4th, 12th, and 20th plies to further ensure adequate compaction. Following the completed layup, each part was vacuum bagged according to section 2.5 and held under a vacuum for a minimum of 8 hours.

The parts were cured using the recommended cure cycles supplied from the vendor. The test matrix, factor K, dictated in which vessel the parts were to be cured. Composite parts are cured in a variety of different ways. Factor K included two of those methods in this experiment—autoclave and oven curing. The autoclave used, shown in figure 5, is programmable to temperature control within ±1 °F and pressure control within ±1 psi. The oven used, shown in figure 6, is also programmable with temperature control within ±1 °F.

2.7 Data Collection

Procedures were put in place to ensure consistent data collection for this experiment. Prior to layup of a part, one end of the tooling was marked for indexing purposes. The angle of the tool was then measured at distances of 8, 12, and 16 inches from this side of the tool. This procedure can be seen in figure 7, using a universal bevel protractor with an accuracy to one-twelfth of a degree (5 minutes). These locations on the tool map directly correspond to the desired locations to be measured for comparison on the composite parts. Recall that there were three parts made for each run of the experiment. Three data points on each part result in nine data points per run. At the completion of the layup, each part was numbered on the left half of the same side as the index marking on the tool. This provided a reference point by which the measurements from the tool could be mapped to the part. The part was then bagged and cured.

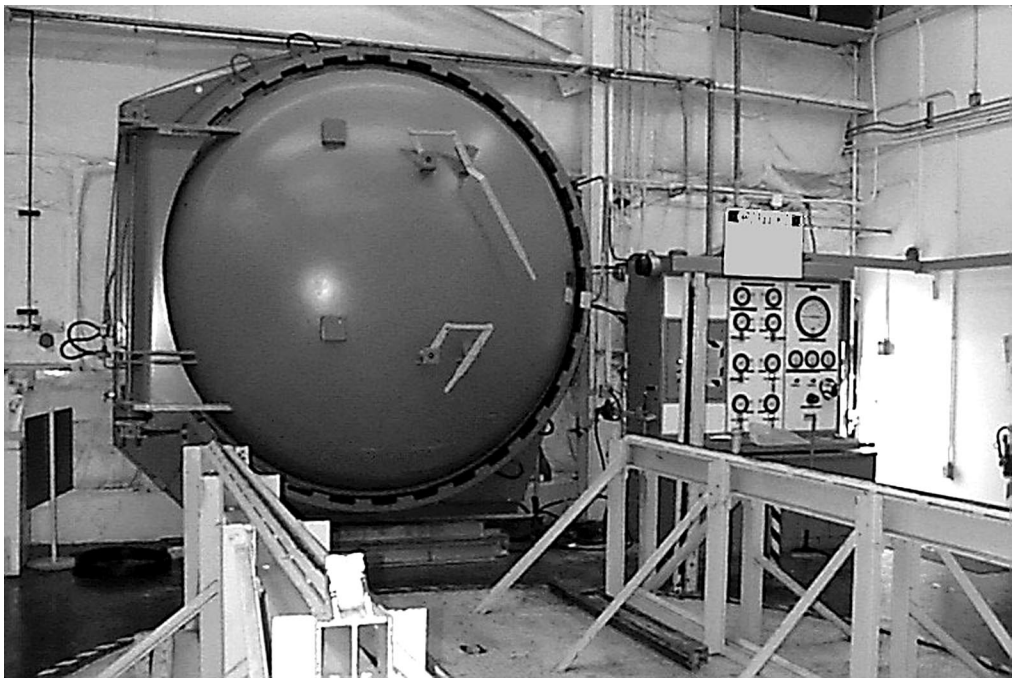

FIGURE 5.—Autoclave used for processing.

FIGURE 6.—Oven used for processing.

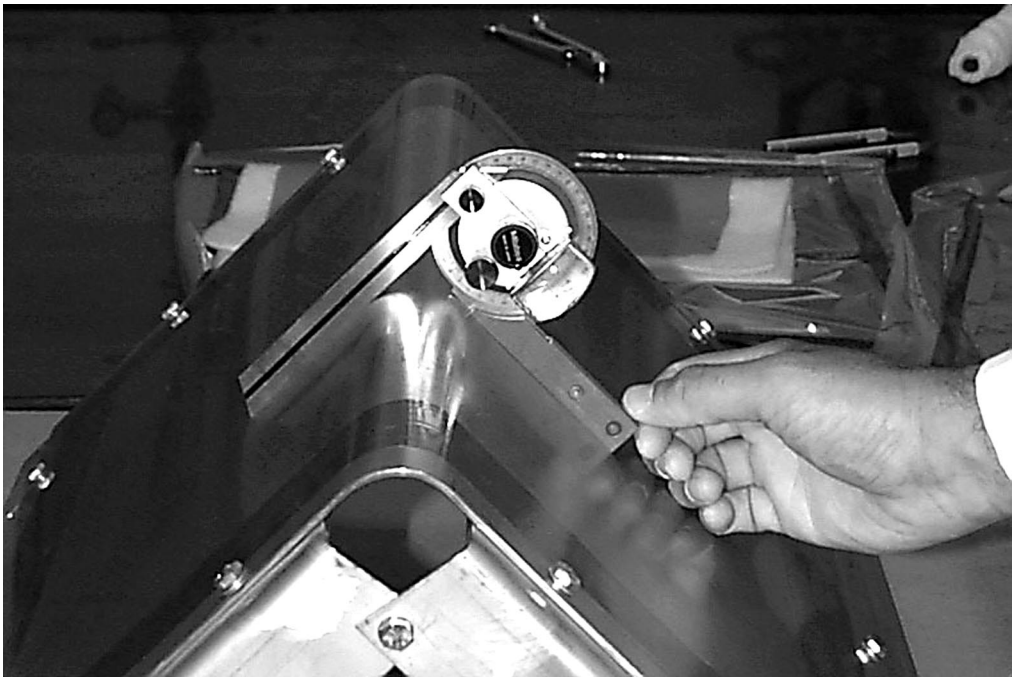

FIGURE 7.—Tool measurement procedure.

The part was removed from the tooling surface after the cure. Identical measurements as before were taken on the tool. An average of these two replications at each data point was used as the tool baseline. These measurements may show a small difference due to several factors, including thermal cycling and the variability of the measurement device. Locations on the part were then marked with a grease pencil in the angle facing the tool side at distances of 2, 6, and 10 inches from the side of the part which had been numbered. These locations allowed for three evenly spaced measurements across each part. The closest location to the edge of a part was 2 inches, in order to get a true angle measurement that was not influenced by edge effects of the panel. The angle was then measured at each of these points as shown in figure 8.

The points from which the data were collected on the tool and part map to each other is shown in figure 9. The difference between the tool baseline measurement and the part measurement at each location is the observed springback. A negative value indicates that the panel sprang inward. These data points were then used in the analysis of the experiment.

2.8 Confirmation Experiment

An additional run—confirmation experiment—using a combination of levels of the factors and interactions, which were indicated to be significant by the analysis, must be run. The purpose of the confirmation experiment is to validate the conclusions drawn during the analysis phase. This is particularly important when screening low-resolution, small fractional-factorial experiments, such as the L_{12} array, are utilized. Because of confounding within columns, the conclusions should be considered preliminary until validated by a confirmation experiment.[5] The confirmation experiment run for this experiment will be presented in section 3.5.

FIGURE 8.—Part measurement procedure.

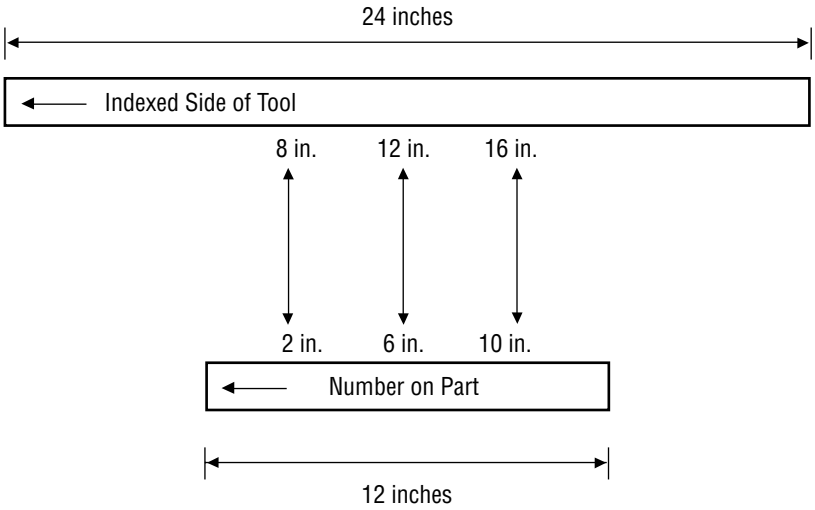

FIGURE 9.—Data point location mapping diagram.

3. DISCUSSION OF RESULTS

The data collected and results from the test matrix for this experiment are presented in this chapter. First, a discussion of some problems during fabrication of the panels will be presented, followed by data collected from the experiment. Next, the analysis of the data and supporting details will be presented, and finally, the confirmation experiment performed will be discussed.

3.1 Fabrication Problems

The fabrication control for this experiment was presented in section 2.6. Every effort was made to process each part under the exact same conditions in order not to potentially induce unwanted environmental noise into the experiment. One problem, however, was encountered during the fabrication of the panels which led to the elimination of a factor from the test matrix.

As previously mentioned, female tooling often presents processing problems. These problems primarily stem from difficulty in getting the prepreg to lay down well in the actual radius. Additional debulks and pressure intensifiers aid in controlling the bulk factor in these regions. Potential problems with this include air bubbles, wrinkles, or folds in the prepreg which can lead to bridging or looseness between plies, creating wrinkles or bridging during cure. Additionally, the unidirectional tape that was used in this experiment is difficult to form into nonuniform directions; a problem inherent in the material form. When part designs include complex contours, fabric materials are used because they are more "workable" into these questionable regions. However, this experiment is limited to unidirectional tape; the rational for its selection is presented in section 2.2.

This processing limitation was encountered. The typical female tooling configuration is shown in figure 10. Despite extreme care during layup and additional debulks to help aid compaction, bridging in the female radius proved to be unavoidable. A closeup of a layup in a female tool is shown in figure 11. The wrinkles and bridging in the radius were evident during the layup process and continued to become worse with the inclusion of each subsequent ply. An unworkable situation between the female tooling and unidirectional prepreg tape had been encountered. This resulted in the elimination of factor E, the radius orientation of the tooling, from the test matrix. Consequently, panels were fabricated using the male tooling for the entire experiment. The analysis was still run as intended, but any information that would have been obtained on this factor is lost. Recall, that the material form selection was the key driver to this problem. Also recall the reasoning for the selection of this form, as presented in section 2.2.

No other processing or fabrication anomalies were encountered during the fabrication of the composite panels.

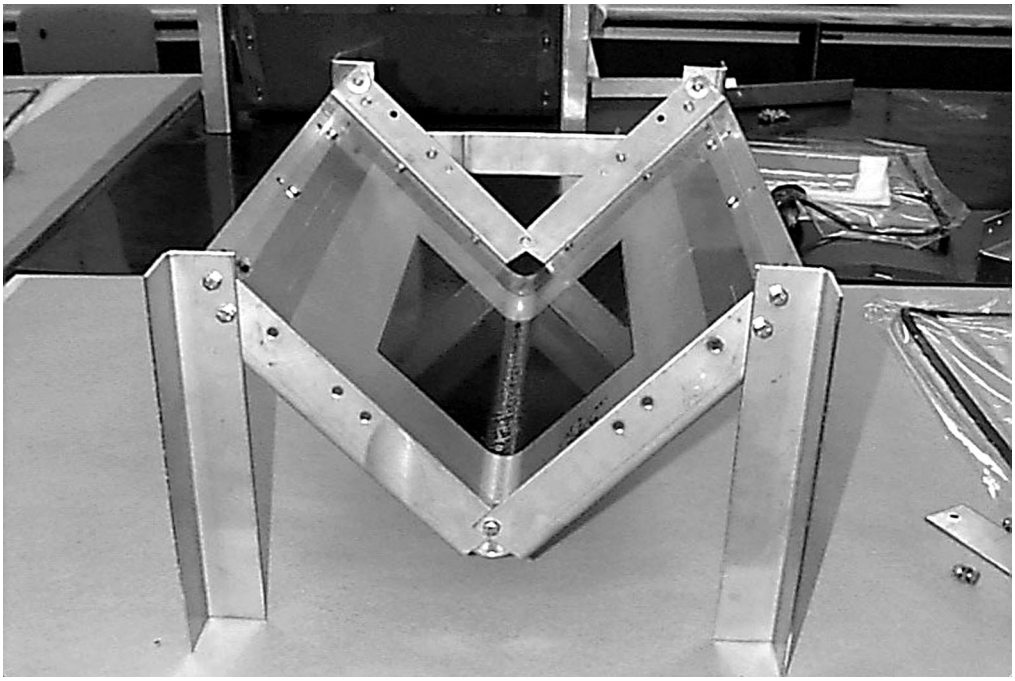

FIGURE 10.—Standard female tooling configuration.

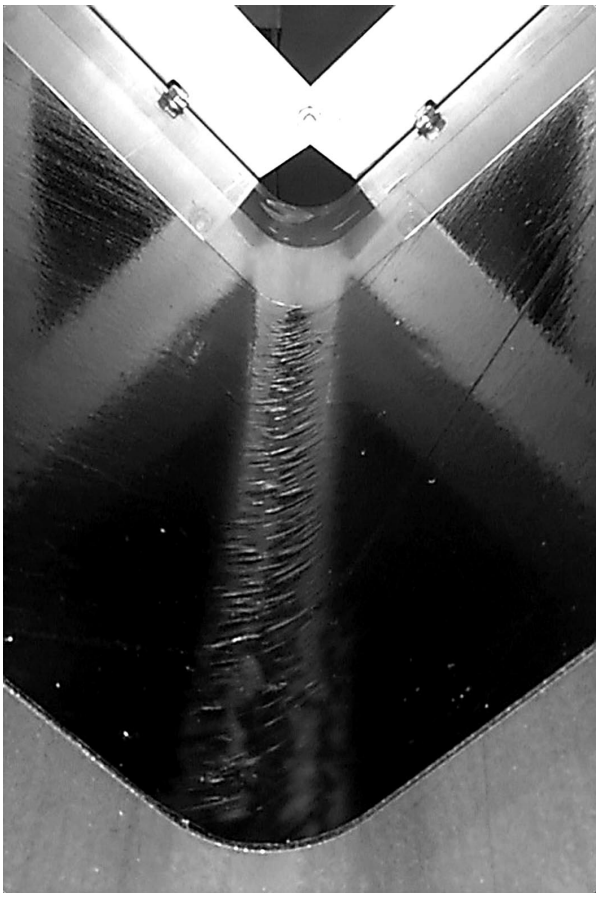

FIGURE 11.—Closeup of bridging problem in female tooling during layup.

3.2 Experimental Data

The procedures for data collection in this experiment were presented in section 2.7. These procedures established a baseline from which the data could be obtained so that the data collection process would not induce unwanted environmental noise into the experiment.

The raw data for each run in the test matrix is presented in the appendix. Table 5 presents a summary of the resultant mean springback data for the runs on each tool. Recall from section 2.1, the intent in this experiment is to analyze the measured springback over a range of fabrication angles in order to provide a larger environment in which robustness could be achieved. Therefore, the analysis in section 3.3 will treat the data as nine data points from a single source, rather than three data points from three different sources. However, prior to the analysis, some observations can be made upon examination of the data. The measured springback becomes more positive as the tooling angle increases in 11 of the 12 runs, with run 9 being the single exception. The springback mean for run 9, –0.0185, and standard deviation, 0.0934, are very low in comparison to the other runs. Also, recall from section 2.7, the accuracy of the measurement device used is one-twelfth of a degree (0.0833°). Clearly, the data for run 9 is inside the accuracy of the device used and may not be able to discriminate the relative magnitude differences in the tools. This accounts for run 9 not following the same trend as the other 11 runs; the magnitude of the numbers and the accuracy of the device have masked the data for run 9. If more precise measurement equipment had been available to use for data collection, run 9 probably would also follow the same trend as the rest of the data.

TABLE 5.—*Summary springback data.*

Run	60°	90°	120°	Average	Std Dev
1	–1.3750	–1.1944	–0.3750	–0.9815	0.4935
2	–2.2084	–1.4306	–1.1111	–1.5833	0.5137
3	–1.5695	–0.8195	–0.5972	–0.9954	0.4470
4	–2.3194	–1.7639	–1.3750	–1.8194	0.4146
5	–0.4028	0.1250	0.8334	0.1852	0.5489
6	–1.8889	–0.9861	–0.9444	–1.2731	0.4983
7	–1.7083	–1.2083	–0.8889	–1.2685	0.3591
8	–2.9583	–1.8472	–1.2639	–2.0231	0.7550
9	–0.0417	0.0834	–0.0972	–0.0185	0.0934
10	–4.0000	–2.4722	–1.1667	–2.5463	1.3452
11	–4.1389	–3.2223	–1.9722	–3.1111	0.9488
12	–1.4305	–1.1944	–0.9583	–1.1944	0.2083

A graphical summary of the resultant mean springback data for each run on the individual tools is presented in figure 12. The variability in each of the runs can be easily seen in this graph; runs 7, 9, and 12 are clearly the most robust. The factors in these runs will probably be the primary drivers in the Taguchi analysis.

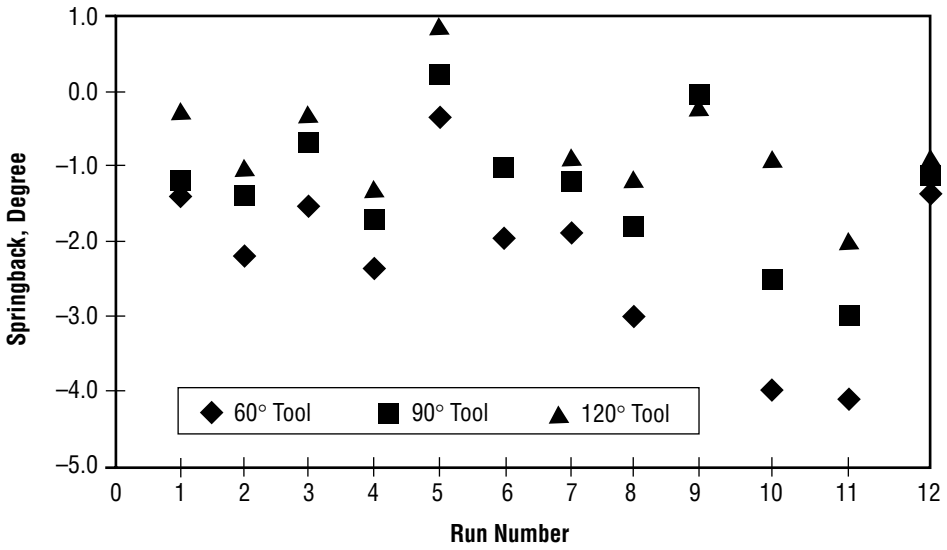

FIGURE 12.—Summary springback data versus run number.

Additional observations can be made by examining the data. Table 6 presents the relative springback rankings by run number. First, the rankings are done for each individual tool, then for the average of each run using the data from all the tools for that run. Despite the differing absolute magnitudes and variabilities, and the relative magnitudes and variabilities, the relative magnitudes are very consistent from run to run.

TABLE 6.—*Relative springback rankings (1=lowest).*

Run	60°	90°	120°	Average
1	3	5	2	3
2	8	8	8	8
3	5	3	3	4
4	9	9	11	9
5	2	2	4	2
6	7	4	6	7
7	6	7	5	6
8	10	10	10	10
9	1	1	1	1
10	11	11	9	11
11	12	12	12	12
12	4	6	7	5

3.3 Taguchi Analysis of the Data

The Taguchi concept is based on the use of a signal-to-noise (S/N) ratio to determine significant factors and their levels. These factors and levels are then chosen; first, to reduce variability in order to optimize robustness, and second, to adjust the mean to the desired value. The S/N ratio consolidates several replications into one value that reflects the amount of variation present.[5]

There are several S/N ratios available, depending on the type of characteristic being evaluated. The three characteristics are: lower is better, nominal is best, and higher is better. This experiment is to determine the factors that will minimize springback. However, minimizing springback does not imply that the lowest is better—springback can be measured positive or negative. The goal is to minimize springback in absolute terms; thus, no springback, or zero, is the goal. Therefore, the type of characteristic being evaluated is nominal is best.

The best characteristic for the nominal S/N ratio is

$$S/N = -10 \times \log\left(V_e\right) \quad , \tag{1}$$

where V_e is the error variance for the data set.[5] This form of the S/N equation is only a function of the variance. The best S/N ratio exists in another form but is a function of both the mean and variance. Since springback, y_i, can take on a negative value, this form to calculate S/N must be used as the negative means would effect the calculations. V_e is calculated by doing a no-way analysis of variance (ANOVA) on all the repetitions for a run. Simplified, the error variance is

$$V_e = SS_e / \nu_e \quad , \tag{2}$$

where SS_e is the sum of squares for the error and ν_e is the degrees of freedom associated with the error. SS_e can be obtained by subtraction from the total sum of squares:

$$SS_e = SS_T - SS_m \quad . \tag{3}$$

The total sum of squares is expressed by

$$SS_T = \sum_{i=1}^{r} y_i^2 \quad , \tag{4}$$

where *r* is equal to the number of repetitions in a trial regardless of noise levels. The sum of squares for the mean can be expressed by

$$SS_m = r \times \left(\bar{y}\right)^2 \quad . \tag{5}$$

The degrees of freedom for the error, v_e, can also be obtained by subtraction from the total degrees of freedom:

$$v_e = v_T - v_m \quad . \tag{6}$$

The total degrees of freedom is *r*, the number of repetitions in a trial regardless of noise levels, and one degree of freedom is reserved for the mean. The equation for v_e then simplifies to

$$v_e = r - 1 \quad . \tag{7}$$

Combining the terms in the equations, V_e can be simplified to

$$V_e = \frac{\sum_{i=1}^{r} y_i^2 - r(\bar{y})^2}{r-1} \quad . \tag{8}$$

The summary of the S/N ratio calculations is presented in table 7. Also included for each run are the components that contribute to each part of the equations that lead to the S/N ratio. Recall, there were three data points for each of the three different tools, for a total of nine data points for each run; thus, r=9.

TABLE 7.—*S/N ratio calculation summary.*

Run	Mean	SS_t	SS_m	V_e	S/N
1	–0.9815	10.6179	8.6696	0.2435	6.1344
2	–1.5833	24.6736	22.5623	0.2639	5.7854
3	–0.9954	10.5158	8.9171	0.1998	6.9931
4	–1.8194	31.1682	29.7932	0.1719	7.6480
5	0.1852	2.7189	0.3087	0.3013	5.2104
6	–1.2731	16.5747	14.5881	0.2483	6.0498
7	–1.2685	15.5135	14.4820	0.1289	8.8961
8	–2.0231	41.3969	36.8372	0.5700	2.4416
9	–0.0185	0.0729	0.0031	0.0087	20.5898
10	–2.5463	72.8300	58.3525	1.8097	–2.5760
11	–3.1111	94.3140	87.1124	0.9002	0.4566
12	–1.1944	13.1873	12.8402	0.0434	13.6257

The response tables can now be created using S/N and $\bar{y}$ from table 7. First, the response table for the S/N ratio will be generated. This table shows which factors reduce variability and the associated levels. Second, the response table for $\bar{y}$ will be generated. This table shows which factors adjust the mean and the associated levels.

Each factor is considered separately to create these tables. The test matrix, table 1, and S/N ratios, table 7, are needed to perform this calculation. Let X be any factor in the test matrix. The S/N ratio for each entry in the S/N response table is calculated by

$$[S/N]_{X_j} = \frac{1}{n_j} \times \sum_{k=1}^{n_j} [S/N]_k \quad , \tag{9}$$

where j = the level (1 or 2), k= runs in which factor X is set at level j, and n_j =the number of runs where factor X is set at level j (6 for every factor except E, which is 12, since there is only one level).

The S/N response table is presented in table 8. The largest differences between the levels for each factor indicate the strongest factors which reduce variability. As a general rule, about one-half of the control factors with the largest deltas are to be selected.[9] The strongest factors are B, C, D, I, and K.

TABLE 8.—*S/N response table.*

Lev./Fac.	A	B	C	D	E	F	G	H	I	J	K
1	6.3035	8.4734	9.0400	5.1036	6.7712	6.7869	6.1347	5.9502	5.1312	6.7146	10.0844
2	7.2390	5.0691	4.5025	8.4389	–	6.7556	7.4078	7.5923	8.4113	6.8279	3.4581
Delta	0.9355	3.4043	4.5375	3.3353	0.0000	0.0313	1.2731	1.6421	3.2801	0.1133	6.6263

The $\bar{y}$ for each entry in the $\bar{y}$ response table is calculated similar to the entries in the S/N response table, using

$$[\bar{y}]_{X_j} = \frac{1}{n_j} \times \sum_{k=1}^{n_j} [\bar{y}]_k \quad . \tag{10}$$

The $\bar{y}$ response table is presented in table 9. The largest differences between the levels for each factor indicate the strongest factors which adjust the mean. The strongest factors are A, B, H, and K.

TABLE 9.—*Mean response table.*

Lev./Fac.	A	B	C	D	E	F	G	H	I	J	K
1	–1.0779	–1.1451	–1.4514	–1.3572	–1.3858	–1.4676	–1.2446	–1.5964	–1.5031	–1.4437	–0.7585
2	–1.6937	–1.6265	–1.3202	–1.4144	–	–1.3040	–1.5270	–1.1751	–1.2685	–1.3279	–2.0131
Delta	0.6157	0.4815	0.1312	0.0571	0.0000	0.1636	0.2824	0.4213	0.2346	0.1157	1.2546

When this analysis has been completed and the tables generated, the control factors may be put into four classes:[5]

- Class I: Factors which affect both average, $\bar{y}$, and variation, S/N
- Class II: Factors which affect variation, S/N, only
- Class III: Factors which affect average, $\bar{y}$, only
- Class IV: Factors which affect nothing.

The strategy is to select levels of class I and II factors to reduce variation and class III factors to adjust the mean to the target value. Class IV factors may be set at the most economical level since nothing is affected. A summary of the control factors and their associated classes is presented in table 10.

TABLE 10.—*Control factor summary.*

Control Factor	Affect S/N	Affect $\bar{y}$	Factor Class	Affect S/N & $\bar{y}$	Affect S/N	Affect $\bar{y}$	Affect Neither
A		*	III			A1	
B	*	*	I	B1			
C	*		II		C1		
D	*		II		D2		
E			IV				E1
F			IV				F2
G			IV				G2
H		*	III			H2	
I	*		II		I2		
J			IV				J2
K	*	*	I	K1			

A discussion of each factor and its chosen level is necessary at this point. The factors will be addressed by class, using the data from tables 8 and 9 and the summary in table 10.

- Class I Factors—These factors affect both average, $\bar{y}$, and variation, S/N. The primary focus on determining levels is placed on the variation.
  - Factor B—Level 1 has the higher S/N ratio. Level 1 also has the more desirable $\bar{y}$ response. Therefore, this selection is easy, B1.
  - Factor K—Level 1 has the same characteristics for this factor as in factor B. Therefore, the choice is K1.

- Class II Factors—These factors affect variation, S/N, only.
  - Factor C—Level 1 has the higher S/N ratio. The mean effect is not significant. Choose C1.
  - Factor D—Level 2 has the higher S/N ratio. Again, the mean effect is not significant. Choose D2.
  - Factor I—Level 2 has the higher S/N ratio. Even though not significant, level 2 is the more desirable level for the mean. Choose I2.

- Class III Factors—These factors affect variation, S/N, only.
  - Factor A—Level 1 has the mean closer to the target value. Variation is not significant. Choose A1.
  - Factor H—Level 2 has the more desirable mean. Even though not significant, level 2 is the more desirable level for the variation. Choose H2.

- Class IV Factors—These factors may be set at the most economical level since nothing is affected.
  - Factor E—Recall, female tools were removed from the experiment, leaving only one level for this factor, E1.
  - Factor F—This factor has very little significance to the variation or mean. Level 2 is chosen because it is easier to fabricate, F2.
  - Factor G—Based on the data in the S/N table, level 2 is chosen. Enough material was readily available to fabricate confirmation panels, G2.
  - Factor J—Level 2 is more desirable for both the variance and mean. This factor is easy to process at either level. Choose J2.

The "Paper Champion" can be established now that the factor and level analysis is complete. The "Paper Champion" is the optimal design, on paper, based on the factor analysis done to determine the significant factors that contribute to the variance and mean. This design will be used as a confirmation experiment as described in section 2.8, with the purpose of validating the conclusions drawn during the analysis phase. The confirmation experiment will be presented in section 3.5.

The "Paper Champion" for this experiment is $A_1B_1C_1D_2E_1F_2G_2H_2I_2J_2K_1$.

3.4 Discussion of the Factors

This section will discuss each of the factors in the test matrix in relation to the observed results. These facts are important in understanding the design for the confirmation experiment. Recall, the objective of this experiment is to minimize springback across a wide operating environment. The use of tables 8 and 9 will help in the evaluation of each factor.

Factor A was the curing temperature of the epoxy resin. The mean springback was lower using the lower temperature curing resin. This was intuitively expected, given thermal expansion in the tooling, and was a significant factor. The measured robustness, S/N, was better at the higher temperature; however, it was not significant. Therefore, the lower temperature of 250 °F was selected for the confirmation experiment.

Factor B was the viscosity of the epoxy resin. It is expected that a lower flow resin will behave less erratic and produce better mean and variability results. This expectation was confirmed by the results, being a significant factor in controlling both the mean and variability. Therefore, the lower flow resin was selected.

Factor C was the fiber modulus. Lower modulus fibers are typically easier to process since they are less brittle than higher modulus fibers. This was a significant effect in the observed variability in the experiment. The mean, however, was not effected by the choice of fiber modulus. Therefore, the lower modulus fiber was selected.

Factor D was the tooling material. Steel has a thermal expansion coefficient of half that for aluminum; then naturally, the steel would be expected to perform better. This was confirmed by the significant observed S/N ratio. The tooling material selection was not significant to the mean; therefore, steel tooling was selected.

Factor E was the radius orientation of the tooling. As discussed in section 3.1, this factor was dropped from the test matrix. Male tooling was used for the remainder of the experiment.

Factor F was the radius of the tooling. This factor was not found to have a significant effect on the mean or variability. The more shallow radius was chosen for the confirmation run because it is easier to fabricate and has a better chance of producing a higher quality part.

Factor G was the thickness of the part. Thicker parts provide more stability after the cure of the resin is complete than a thinner part. The analysis confirmed that thicker parts are more robust and the mean was closer to the desired target. However, these facts were not found to be significant. A thicker layup was chosen, since the analysis did lean in that direction and the material required was readily available.

Factor H was the layup configuration of the parts. The inclusion of 45° plies showed some significance in controlling the mean, but not the variability. This may be accounted for by the predicted layer shrinkage using classical lamination theory.[10] To help control the mean, the layup including the 45° plies was selected.

Factor I was the use of a pressure intensifier in the bagging stack for cure. The use of the intensifier was shown to reduce the variability but not significantly effect the mean. A similar argument used for factor B can be used here; controlling the resin flow resin will result in less erratic and produce better mean and variability results. Therefore, the confirmation experiment included the use of the pressure intensifier.

Factor J was the resin content of the finished part. This factor was not found to have a significant effect of the mean or variability. The analysis showed that the parts in which no resin was bled were more slightly robust and the mean was slightly closer to the desired target. Also, a no-bleed bagging stack restricts resin flow. As confirmed in factor B, restricting the resin flow can help control springback. Therefore, the no bleed bagging sequence was selected.

Factor K was the curing vessel. The autoclave provides pressure on the part during resin crosslinking, where the oven does not. This pressure adds internal residual stresses in the part, with the potential of being a major effect on the springback of the final part. This factor was found to be the most significant factor in terms of controlling the mean and variability. As expected, the oven cure was much more robust and controllable, most likely due to the residual stresses encountered in autoclaved parts. Therefore, the confirmation experiment was cured in the oven.

3.5 Confirmation Experiment

This section will outline the steps taken in the confirmation experiment in order to validate the conclusions drawn during the analysis phase done in section 3.3. Recall, from section 2.8, the confirmation experiment is particularly important when screening, low-resolution, small fractional-factorial experiments, such as the L_{12} array, are utilized.

In section 3.3, the analysis of the data was done and the significant factors and the optimum levels were selected. Recall that the "Paper Champion" to be used in the confirmation experiment was $A_1B_1C_1D_2E_1F_2G_2H_2I_2J_2K_1$.

Next, the estimated mean for the preferred combination of the levels of significant factors and interactions must be calculated. This estimated mean is based on the assumption of additivity of the factorial effects. If one factor effect can be added to another to accurately predict the result, then good additivity exists. If an interaction exists, then the additivity between those factors is poor.[5] Given the L_{12} array used in this experiment, the confounding of the interactions in the design should allow for good additivity of the factorial effects. This additivity is based on the difference from the observed mean as expressed by,

$$\hat{\mu} = \sum^{n} X_j - (n-1) \times \overline{Y} \tag{11}$$

where n = the number of factors included in the estimate of the mean, X is the factor included in the estimate, and j is the chosen level of each of the factors to be included. Nonsignificant factors are not used for the estimation to avoid overestimating.[11] Therefore, only factors falling into class I, II, or III will be used (factors A, B, C, D, H, I, and K). Inserting these factors into the above equation gives,

$$\hat{\mu} = \sum\left(A_1 + B_1 + C_1 + D_2 + H_2 + I_2 + K_1\right) - (7-1) \times \overline{Y} \quad . \tag{12}$$

Inserting the $\bar{y}$ values from table 9, this equation becomes,

$$\hat{\mu} = (-1.0779 - 1.1451 - 1.4514 - 1.4144 - 1.1751 - 1.2685 - 0.7585) - (6) \times (-1.3858)$$

$$\hat{\mu} = 0.0239 \quad . \tag{13}$$

The confirmation experiment results cannot be expected to completely agree with the estimate. Neither the initial test matrix nor the confirmation experiment utilized infinite replications. The data set for the confirmation experiment is one-twelfth the size of the initial matrix. It is important, however, that the result is close to the estimate. Confidence intervals are used for this purpose.[12]

The confidence interval for a confirmatory experiment is presented in reference 12 as,

$$\bar{x} = \hat{\mu} \pm \sqrt{F_{\alpha,1,v_{ep}} \times V_{ep} \times \left[\frac{1}{n_e} + \frac{1}{r}\right]} \quad , \tag{14}$$

where V_{ep} is the pooled error variance, ν_{ep} is the degrees of freedom for the pooled variance, n_e = total number of experiments/total degrees of freedom considered in the calculation of $\hat{\mu}$, and r= the sample size in the confirmation experiment. If the actual result is held in the confidence interval, the reproducibility of factorial effects, error recognized, and experiment are reliable.[12] Pooling data results in the variance and error observed in the nonsignificant factors being added to the total error for the experiment. The ANOVA table for the initial test matrix, including every factor, is presented in table 11. The variance for the insignificant factors is pooled into the error term in table 12. It is from this table that the values will be used for the confirmation experiment.

TABLE 11.—*ANOVA table for initial matrix.*

Source	SS	dof	V
A	10.2366	1	10.2366
B	6.2595	1	6.2595
C	0.4646	1	0.4646
D	0.0881	1	0.0881
E	0.0000	0	0.0000
F	0.7225	1	0.7225
G	2.1532	1	2.1532
H	4.7924	1	4.7924
I	1.4855	1	1.4855
J	0.3616	1	0.3616
K	42.5011	1	42.5011
Error	264.5185	97	2.7270
Total	333.5836	107	

TABLE 12.—*ANOVA table (Pooled).*

Source	SS	dof	V
A	10.2366	1	10.2366
B	6.2595	1	6.2595
C	1.9357	1	1.9357
D	1.6358	1	1.6358
E	–	–	–
F	–	–	–
G	–	–	–
H	4.7924	1	4.7924
I	2.6891	1	2.6891
J	–	–	–
K	42.5011	1	42.5011
Error	263.5335	100	2.6353
Total	333.5836	107	

The sample size for the confirmation trial will be the same as a run in the initial test matrix, three parts with three data points for a total of nine. Now, the only missing ingredient in the confidence interval equation is alpha, α. Most literature for experiments of this type typically select a value for α, risk, of 0.05. This value results in 95-percent confidence in the results, yet the resulting intervals from 0.05 are not so big that virtually any additional runs without proper controls could fit into it. Using α=0.05, interpolation of the F-values found in reference 4, results in a corresponding F-value of $F_{0.05,1,100}$ = 3.9467. The equation for the confidence interval now becomes

$$\bar{x} = 0.0239 \pm \sqrt{(3.9467)\times(2.6353)\times\left[\frac{1}{108/(1+7)}+\frac{1}{9}\right]}$$

$$\bar{x} = 0.0239 \pm 1.3878 \quad , \tag{15}$$

resulting in a confidence interval for the estimated mean for the confirmation experiment of

$$-1.3639 \le \bar{x} \le 1.4117 \quad . \tag{16}$$

The raw data for the confirmation experiment is presented in the appendix. A summary of this data and its Taguchi analysis is presented in table 13.

TABLE 13.—*Confirmation run summary and Taguchi analysis.*

Location	60°	90°	120°
2 Inches	–1.1667	–0.9167	–0.958
6 Inches	–1.2500	–0.8333	–0.9166
10 Inches	–0.9583	–0.8333	–0.9587
Taguchi	Mean	V_e	S/N
Analysis	–0.9769	0.0200	16.9877

The observed mean for the confirmation experiment falls within the confidence interval for the estimated mean, thereby validating the reproducibility of factorial effects, error recognized, and experiment as reliable. Through a closer look at the equation for the confidence interval and interpolation of the F tables, the observed mean value falls within the interval at an alpha value all the way up to $\alpha \cong 0.175$. This places substantial weight on the validation results of this experiment.

Several other observations of the Taguchi analysis should be highlighted. The observed variance of the confirmation run is much lower than any of the runs in the initial matrix except one, run 9. Recall from discussion in section 3.2, the magnitude of the numbers and the accuracy of the device have masked the data for run 9 due to the accuracy of the measuring device used in this experiment. Therefore, the selection of class I and II factors to reduce the variability performed as desired. Also, the observed mean is one of the closest to zero from all the runs that were performed. This also confirms the selection of class II and III factors to adjust the mean to the target value performed as desired. Finally, the observed S/N ratio is much higher than any of the runs in the initial matrix except one, run 9. A similar deduction can also be made about run 9 in this comparison.

4. CONCLUSIONS AND RECOMMENDATIONS

This experiment yielded several significant results. The confirmation experiment validated the reproducibility of factorial effects, error recognized, and experiment as reliable. The degree to which the confirmation experiment validated the experiment is significant. It shows the design of the experiment, the fabrication of the panels, and the techniques and process controls in this experiment were very sound. It also shows the strength of the Taguchi approach to designing experiments.

Efforts of this magnitude are not likely to be completed without difficulties, this experiment was no exception. The problems encountered with the female tooling can serve as a lesson learned in designing composite parts. The raw material form selected, as well as the tooling configuration, need to be thoroughly planned in the fabrication of composite parts. While it was unfortunate this factor was not included in the experiment, valuable information was still attained.

The material used in the design of tooling needs to be a major consideration when fabricating composite components, as expected. The factors dealing with resin flow, however, induce several potentially serious material and design questions. These questions must be dealt with up front in order to minimize springback; viscosity of the resin, vacuum bagging of the part for cure, and the curing method selected. These factors directly affect design, material selection, and processing methods.

The orthogonal array chosen was to examine only the main effects, not to explore the interaction effects of the factors. The L_{12} array was designed to highly confound the interaction effects, making it an excellent array for screening factors for future experiments. Given the success of this experiment and the analysis, the objective of using this array was achieved.

Consideration for future efforts should include an investigation of the interaction effects of the factors found to be significant in this experiment, in particular, those involving resin flow. Other efforts to explore include performing a classical statistical analysis of the data collected. These techniques may help to develop accurate prediction methods for springback.

REFERENCES

1. Stover, D.: *Advanced Composites*, vol. 8, No. 2, March/April 1993.

2. *Robust Design Workshop*, American Supplier Institute, 1993.

3. Taguchi, G.; and Konishi, S.: *Taguchi Methods—Orthogonal Arrays and Linear Graphs*, 1987.

4. Montgomery, D.: *Design and Analysis of Experiments*, Fourth edition, 1997.

5. Ross, P.J.: *Taguchi Techniques for Quality Engineering*, Second edition, 1996.

6. Silverman, E.M.: *Composite Spacecraft Structures Design Guide*, NASA Contractor Report 4708, 1996.

7. *Basic Guide to Vacuum Bagging*, Airtech Advanced Materials Group, no date.

8. *Vacuum Bagging and Materials*, Airtech Advanced Materials Group, no date.

9. *Design of Experiment and Engineering Optimization*, ITEQ International, Ltd., no date.

10. Ridgard, C.: *Accuracy and Distortion of Composite Parts and Tools: Causes and Solutions*, SME #EM93–113, 1992.

11. Taguchi, G.: *Introduction to Quality Engineering—Designing Quality Into Products and Processes*, 1986.

12. Taguchi, G.; Yokoyama, Y.; and Wu, Y.: *Taguchi Methods—Design of Experiments*, vol. 4, 1993.

APPENDIX

The raw data for this experiment are presented in tables 14–26. First, the data for the initial test matrix will be presented, followed by the data for the confirmation run.

The data presented below were collected as described in section 2.7. The “Tool” column represents which angled tooling the measurement was taken from. The “Location” column represents the data point location on the part as described in figure 9. The “Tool (Pre)” column represents the measured angle of the tool at the specific location prior to the part layup. The “Tool (Post)” column represents the measured angle of the tool at the specific location after the curing of the part. The “Tool (Avg)” column represents the average of the “Tool (Pre)” and “Tool (Post)” columns. This averaging will help minimize the cycling from thermal expansion of the tool on the resultant data. The “Part” column represents the measured angle of the part following cure at the specific location. The “Spring” column is the difference between the “Tool (Avg)” and “Part” column. It represents the observed springback in the part at the specific location.

TABLE 14.—*Raw data for run 1.*

Tool	Location	Tool (Pre)	Tool (Post)	Tool (Avg)	Part	Spring
60°	2 Inches	59.5000	59.5000	59.5000	57.7500	–1.7500
	6 Inches	59.3333	59.4167	59.3750	58.0833	–1.2917
	10 Inches	59.3333	59.5000	59.4167	58.3333	–1.0834
90°	2 Inches	89.9167	89.8333	89.8750	88.6667	–1.2083
	6 Inches	89.9167	89.8333	89.8750	88.6667	–1.2083
	10 Inches	89.8333	89.8333	89.8333	88.6667	–1.1666
120°	2 Inches	119.8333	119.7500	119.7917	119.3333	–0.4583
	6 Inches	119.9167	119.7500	119.8334	119.5000	–0.3333
	10 Inches	120.0000	120.0000	120.0000	119.6667	–0.3333

TABLE 15.—*Raw data for run 2.*

Tool	Location	Tool (Pre)	Tool (Post)	Tool (Avg)	Part	Spring
60°	2 Inches	60.0833	60.1667	60.1250	58.2500	–1.8750
	6 Inches	60.6667	60.8333	60.7500	58.3333	–2.4167
	10 Inches	60.5833	60.7500	60.6667	58.3333	–2.3334
90°	2 Inches	90.2500	90.4167	90.3334	88.8333	–1.5001
	6 Inches	90.8333	91.0833	90.9583	89.6667	–1.2916
	10 Inches	91.0000	91.0000	91.0000	89.5000	–1.5000
120°	2 Inches	120.0833	120.4167	120.2500	119.1667	–1.0833
	6 Inches	120.1667	120.4167	120.2917	119.1667	–1.1250
	10 Inches	120.2500	120.3333	120.2917	119.1667	–1.1250

TABLE 16.—*Raw data for run 3.*

Tool	Location	Tool (Pre)	Tool (Post)	Tool (Avg)	Part	Spring
60°	2 Inches	61.0833	61.5000	61.2917	59.6667	–1.6250
	6 Inches	61.0000	61.2500	61.1250	59.5833	–1.5417
	10 Inches	60.9167	61.3333	61.1250	59.5833	–1.5417
90°	2 Inches	90.0000	90.0000	90.0000	89.0833	–1.9167
	6 Inches	89.9167	90.0000	89.9584	89.2500	–0.7083
	10 Inches	89.9167	89.9167	89.9167	89.0833	–0.8334
120°	2 Inches	120.3333	120.3333	120.3333	119.6667	–0.6666
	6 Inches	120.2500	120.2500	120.2500	119.7500	–0.5000
	10 Inches	120.1667	120.2500	120.2084	119.5833	–0.6250

TABLE 17.—*Raw data for run 4.*

Tool	Location	Tool (Pre)	Tool (Post)	Tool (Avg)	Part	Spring
60°	2 Inches	61.0000	61.0833	61.0417	58.7500	–2.2917
	6 Inches	61.0000	61.1667	61.0834	58.7500	–2.3334
	10 Inches	60.9167	61.0833	61.0000	58.6667	–2.3333
90°	2 Inches	90.0000	90.0000	90.0000	88.1667	–1.8333
	6 Inches	90.0000	90.0000	90.0000	88.2500	–1.7500
	10 Inches	90.0000	89.9167	89.9584	88.2500	–1.7084
120°	2 Inches	120.4167	120.5000	120.4584	119.0000	–1.4584
	6 Inches	120.3333	120.4167	120.3750	119.0000	–1.3750
	10 Inches	120.2500	120.3333	120.2917	119.0000	–1.2917

TABLE 18.—*Raw data for run 5.*

Tool	Location	Tool (Pre)	Tool (Post)	Tool (Avg)	Part	Spring
60°	2 Inches	60.1667	60.1667	60.1667	59.7500	–0.4167
	6 Inches	60.8333	60.5000	60.6667	60.2500	–0.4167
	10 Inches	60.7500	60.5000	60.6250	60.2500	–0.3750
90°	2 Inches	90.4167	90.3333	90.3750	90.2500	–0.1250
	6 Inches	91.0833	90.8333	90.9583	91.2500	0.2917
	10 Inches	91.0000	90.9167	90.9584	91.1667	0.2084
120°	2 Inches	120.4167	120.3333	120.3750	121.2500	0.8750
	6 Inches	120.4167	120.2500	120.3334	121.1667	0.8334
	10 Inches	120.3333	120.4167	120.3750	121.1667	0.7917

TABLE 19.—*Raw data for run 6.*

Tool	Location	Tool (Pre)	Tool (Post)	Tool (Avg)	Part	Spring
60°	2 Inches	61.0000	61.4167	61.2084	59.0833	–2.1250
	6 Inches	61.0000	61.3333	61.1667	59.1667	–2.0000
	10 Inches	60.5833	60.6667	60.6250	59.0833	–1.5417
90°	2 Inches	89.5833	89.5000	89.5417	88.3333	–1.2084
	6 Inches	89.5833	89.6667	89.6250	88.6667	–0.9583
	10 Inches	89.7500	89.6667	89.7084	88.9167	–0.7916
120°	2 Inches	121.1667	121.2500	121.2084	120.2500	–0.9583
	6 Inches	121.5000	121.4167	121.4584	120.5000	–0.9583
	10 Inches	121.3333	121.3333	121.3333	120.4167	–0.9166

TABLE 20.—*Raw data for run 7.*

Tool	Location	Tool (Pre)	Tool (Post)	Tool (Avg)	Part	Spring
60°	2 Inches	60.8333	61.0833	60.9583	59.2500	–1.7083
	6 Inches	60.8333	61.0000	60.9167	59.1667	–1.7500
	10 Inches	60.7500	60.9167	60.8334	59.1667	–1.6667
90°	2 Inches	89.9167	90.0000	89.9584	88.7500	–1.2084
	6 Inches	89.8333	89.9167	89.8750	88.6667	–1.2083
	10 Inches	89.8333	89.9167	89.8750	88.6667	–1.2083
120°	2 Inches	120.3333	120.3333	120.3333	119.4167	–0.9166
	6 Inches	120.2500	120.2500	120.2500	119.3333	–0.9167
	10 Inches	120.1667	120.1667	120.1667	119.3333	–0.8334

TABLE 21.—*Raw data for run 8.*

Tool	Location	Tool (Pre)	Tool (Post)	Tool (Avg)	Part	Spring
60°	2 Inches	60.1667	60.2500	60.2084	57.3333	–2.8750
	6 Inches	60.5000	60.5833	60.5417	57.6667	–2.8750
	10 Inches	60.5833	60.6667	60.6250	57.5000	–3.1250
90°	2 Inches	90.3333	90.2500	90.2917	88.4167	–1.8750
	6 Inches	90.8333	90.8333	90.8333	89.1667	–1.6666
	10 Inches	91.0833	91.0833	91.0833	89.0833	–2.0000
120°	2 Inches	120.1667	120.2500	120.2084	118.9167	–1.2917
	6 Inches	120.3333	120.3333	120.3333	119.1667	–1.1666
	10 Inches	120.3333	120.3333	120.3333	119.0000	–1.3333

TABLE 22.—*Raw data for run 9.*

Tool	Location	Tool (Pre)	Tool (Post)	Tool (Avg)	Part	Spring
60°	2 Inches	61.3333	61.3333	61.3333	61.2500	–0.0833
	6 Inches	61.1667	61.0833	61.1250	61.0833	–0.0417
	10 Inches	60.6667	60.6667	60.6667	60.6667	0.0000
90°	2 Inches	89.1667	89.0833	89.1250	89.2500	0.1250
	6 Inches	89.1667	89.1667	89.1667	89.1667	0.0000
	10 Inches	89.0000	89.0833	89.0417	89.1667	0.1251
120°	2 Inches	120.6667	120.5833	120.6250	120.5000	–0.1250
	6 Inches	120.8333	120.9167	120.8750	120.7500	–0.1250
	10 Inches	120.7500	120.6667	120.7084	120.6667	–0.0416

TABLE 23.—*Raw data for run 10.*

Tool	Location	Tool (Pre)	Tool (Post)	Tool (Avg)	Part	Spring
60°	2 Inches	59.5000	59.1667	59.3334	55.0833	–4.2500
	6 Inches	59.4167	59.1667	59.2917	56.0000	–3.2917
	10 Inches	59.5000	59.2500	59.3750	54.9167	–4.4583
90°	2 Inches	89.8333	89.7500	89.7917	87.2500	–2.5417
	6 Inches	89.8333	89.6667	89.7500	88.0833	–1.6667
	10 Inches	89.8333	89.5833	89.7083	86.5000	–3.2083
120°	2 Inches	119.7500	119.7500	119.7500	118.3333	–1.4167
	6 Inches	119.7500	119.8333	119.7917	119.1667	–0.6250
	10 Inches	120.0000	119.7500	119.8750	118.4167	–1.4583

TABLE 24.—*Raw data for run 11.*

Tool	Location	Tool (Pre)	Tool (Post)	Tool (Avg)	Part	Spring
60°	2 Inches	61.4167	61.3333	61.3750	57.0833	–4.2917
	6 Inches	61.3333	61.2500	61.2917	57.2500	–4.0417
	10 Inches	60.6667	60.6667	60.6667	56.5833	–4.0834
90°	2 Inches	89.5000	89.1667	89.3334	86.0833	–3.2501
	6 Inches	89.6667	89.1667	89.4167	86.3333	–3.0834
	10 Inches	89.6667	89.0000	89.3334	86.0000	–3.3334
120°	2 Inches	121.2500	120.7500	121.0000	119.0833	–1.9167
	6 Inches	121.4167	120.8333	121.1250	119.2500	–1.8750
	10 Inches	121.3333	120.7500	121.0417	118.9167	–2.1250

TABLE 25.—*Raw data for run 12.*

Tool	Location	Tool (Pre)	Tool (Post)	Tool (Avg)	Part	Spring
60°	2 Inches	59.1667	59.0833	59.1250	57.7500	–1.3750
	6 Inches	59.1667	59.0000	59.0834	57.6667	–1.4167
	10 Inches	59.2500	59.0833	59.1667	57.6667	–1.5000
90°	2 Inches	89.7500	89.5833	89.6667	88.4167	–1.2500
	6 Inches	89.6667	89.5000	89.5834	88.4167	–1.1666
	10 Inches	89.5833	89.4167	89.5000	88.3333	–1.1667
120°	2 Inches	119.7500	119.6667	119.7084	118.7500	–0.9583
	6 Inches	119.8333	119.7500	119.7917	118.8333	–0.9583
	10 Inches	119.7500	119.8333	119.7917	118.8333	–0.9583

TABLE 26.—*Raw data for confirmation run.*

Tool	Location	Tool (Pre)	Tool (Post)	Tool (Avg)	Part	Spring
60°	2 Inches	60.8333	61.0000	60.9167	59.7500	–1.1667
	6 Inches	61.0000	60.8333	60.9167	59.6667	–1.2500
	10 Inches	60.7500	60.6667	60.7084	59.7500	–0.9583
90°	2 Inches	89.5000	89.3333	89.4167	88.5000	–0.9167
	6 Inches	89.5833	89.4167	89.5000	88.6667	–0.8333
	10 Inches	89.6667	89.5000	89.5834	88.7500	–0.8333
120°	2 Inches	120.5000	120.7500	120.6250	119.6667	–0.9583
	6 Inches	120.7500	120.9167	120.8334	119.9167	–0.9166
	10 Inches	120.7500	120.8333	120.7917	119.8330	–0.9587

REPORT DOCUMENTATION PAGE

Form Approved
OMB No. 0704-0188

Public reporting burden for this collection of information is estimated to average 1 hour per response, including the time for reviewing instructions, searching existing data sources, gathering and maintaining the data needed, and completing and reviewing the collection of information. Send comments regarding this burden estimate or any other aspect of this collection of information, including suggestions for reducing this burden, to Washington Headquarters Services, Directorate for Information Operation and Reports, 1215 Jefferson Davis Highway, Suite 1204, Arlington, VA 22202-4302, and to the Office of Management and Budget, Paperwork Reduction Project (0704-0188), Washington, DC 20503

1. AGENCY USE ONLY *(Leave Blank)*	2. REPORT DATE	3. REPORT TYPE AND DATES COVERED
	November 1997	Technical Memorandum

4. TITLE AND SUBTITLE

Investigation of the Springback Associated With Composite Material Component Fabrication
(MSFC Center Director's Discretionary Fund Final Report, Project No. 94–09)

5. FUNDING NUMBERS

6. AUTHORS

M.A. Benzie

7. PERFORMING ORGANIZATION NAMES(S) AND ADDRESS(ES)

George C. Marshall Space Flight Center
Marshall Space Flight Center, Alabama 35812

8. PERFORMING ORGANIZATION REPORT NUMBER

M–842

9. SPONSORING/MONITORING AGENCY NAME(S) AND ADDRESS(ES)

National Aeronautics and Space Administration
Washington, DC 20546–0001

10. SPONSORING/MONITORING AGENCY REPORT NUMBER

NASA/TM–97–206310

11. SUPPLEMENTARY NOTES

Prepared by Materials and Processes Laboratory, Science and Engineering Directorate

12a. DISTRIBUTION/AVAILABILITY STATEMENT

Unclassified–Unlimited
Subject Category 29
Standard Distribution

12b. DISTRIBUTION CODE

13. ABSTRACT *(Maximum 200 words)*

The objective of this research project was to examine processing and design parameters in the fabrication of composite components to obtain a better understanding and attempt to minimize springback associated with composite materials. To accomplish this, both processing and design parameters were included in a Taguchi-designed experiment. Composite angled panels were fabricated, by hand layup techniques, and the fabricated panels were inspected for springback effects. This experiment yielded several significant results. The confirmation experiment validated the reproducibility of the factorial effects, error recognized, and experiment as reliable. The material used in the design of tooling needs to be a major consideration when fabricating composite components, as expected. The factors dealing with resin flow, however, raise several potentially serious material and design questions. These questions must be dealt with up front in order to minimize springback: viscosity of the resin, vacuum bagging of the part for cure, and the curing method selected. These factors directly affect design, material selection, and processing methods.

14. SUBJECT TERMS

composite materials, springback, Taguchi methods

15. NUMBER OF PAGES

44

16. PRICE CODE

A03

17. SECURITY CLASSIFICATION OF REPORT	18. SECURITY CLASSIFICATION OF THIS PAGE	19. SECURITY CLASSIFICATION OF ABSTRACT	20. LIMITATION OF ABSTRACT
Unclassified	Unclassified	Unclassified	Unlimited