NASA/TP—1998–208528

An Assessment of the Technology of Automated Rendezvous and Capture in Space

M.E. Polites
Marshall Space Flight Center, Marshall Space Flight Center, Alabama

July 1998

The NASA STI Program Office…in Profile

Since its founding, NASA has been dedicated to the advancement of aeronautics and space science. The NASA Scientific and Technical Information (STI) Program Office plays a key part in helping NASA maintain this important role.

The NASA STI Program Office is operated by Langley Research Center, the lead center for NASA's scientific and technical information. The NASA STI Program Office provides access to the NASA STI Database, the largest collection of aeronautical and space science STI in the world. The Program Office is also NASA's institutional mechanism for disseminating the results of its research and development activities. These results are published by NASA in the NASA STI Report Series, which includes the following report types:

- TECHNICAL PUBLICATION. Reports of completed research or a major significant phase of research that present the results of NASA programs and include extensive data or theoretical analysis. Includes compilations of significant scientific and technical data and information deemed to be of continuing reference value. NASA's counterpart of peer-reviewed formal professional papers but has less stringent limitations on manuscript length and extent of graphic presentations.

- TECHNICAL MEMORANDUM. Scientific and technical findings that are preliminary or of specialized interest, e.g., quick release reports, working papers, and bibliographies that contain minimal annotation. Does not contain extensive analysis.

- CONTRACTOR REPORT. Scientific and technical findings by NASA-sponsored contractors and grantees.

- CONFERENCE PUBLICATION. Collected papers from scientific and technical conferences, symposia, seminars, or other meetings sponsored or cosponsored by NASA.

- SPECIAL PUBLICATION. Scientific, technical, or historical information from NASA programs, projects, and mission, often concerned with subjects having substantial public interest.

- TECHNICAL TRANSLATION. English-language translations of foreign scientific and technical material pertinent to NASA's mission.

Specialized services that complement the STI Program Office's diverse offerings include creating custom thesauri, building customized databases, organizing and publishing research results…even providing videos.

For more information about the NASA STI Program Office, see the following:

- Access the NASA STI Program Home Page at ***http://www.sti.nasa.gov***

- E-mail your question via the Internet to help@sti.nasa.gov

- Fax your question to the NASA Access Help Desk at (301) 621–0134

- Telephone the NASA Access Help Desk at (301) 621–0390

- Write to:
  NASA Access Help Desk
  NASA Center for AeroSpace Information
  800 Elkridge Landing Road
  Linthicum Heights, MD 21090–2934

NASA/TP—1998–208528

An Assessment of the Technology of Automated Rendezvous and Capture in Space

M.E. Polites
Marshall Space Flight Center, Marshall Space Flight Center, Alabama

National Aeronautics and
Space Administration

Marshall Space Flight Center

July 1998

Available from:

NASA Center for AeroSpace Information
800 Elkridge Landing Road
Linthicum Heights, MD 21090–2934
(301) 621–0390

National Technical Information Service
5285 Port Royal Road
Springfield, VA 22161
(703) 487–4650

TABLE OF CONTENTS

I. INTRODUCTION 1

II. THE HISTORY OF MANUAL AND AUTOMATED RENDEZVOUS AND CAPTURE AND RENDEZVOUS AND DOCK 3

III. THE NEED FOR AUTOMATED RENDEZVOUS AND CAPTURE IN SPACE 10

IV. TODAY'S TECHNOLOGY AND ONGOING TECHNOLOGY EFFORTS RELATED TO AUTOMATED RENDEZVOUS AND CAPTURE 15

V. PROPOSED AUTOMATED RENDEZVOUS AND CAPTURE SYSTEMS FOR MEETING FUTURE NEEDS 25

VI. A TECHNOLOGY PLAN FOR AUTOMATED RENDEZVOUS AND CAPTURE 27

VII. FINAL COMMENTS 30

APPENDIX A—VGS WITH AN ACTIVE TARGET BASELINED FOR THE MARS SAMPLE RETURN MISSIONS 31

APPENDIX B—AUTOMATED RENDEZVOUS AND CAPTURE FLIGHT EXPERIMENT UTILIZING A MANNED MANEUVERING UNIT 32

B.1 Technical Approach 32
B.2 Management Plan 40
B.3 Cost Plan 43

APPENDIX C— AUTOMATED RENDEZVOUS AND CAPTURE FLIGHT EXPERIMENT UTILIZING TWO SPARTAN SPACECRAFTS 45

C.1 Marshall Space Flight Center automated rendezvous and capture closed loop flight experiment 45

APPENDIX D—AUTOMATED RENDEZVOUS AND CAPTURE FLIGHT EXPERIMENT UTILIZING A SPARTAN SPACECRAFT AND A USAF MICRO-SATELLITE 48

REFERENCES 50

LIST OF FIGURES

1. Gemini guidance and control system 4
2. Apollo command/service module and lunar excursion module ascent stage 5
3. Apollo lunar module ascent stage 5
4. Apollo docking mechanisms 6
5. Soyuz docking assemblies 8
6. Apollo/Soyuz docking mechanisms 9
7. VGS diagram 16
8. VGS logic flow diagram 17
9. Proposed technology roadmap for automated rendezvous and capture 29
10. AR&C operations concept 34
11. MMU/AR&C flight configuration 36
12. AR&C mission description 36
13. AR&C/MMU flight experiment 37
14. Flight demonstration management structure 42
15. Flight demonstration management schedule 42

TECHNICAL PUBLICATION

AN ASSESSMENT OF THE TECHNOLOGY OF AUTOMATED RENDEZVOUS AND CAPTURE IN SPACE

I. INTRODUCTION

The National Aeronautics and Space Administration (NASA) of the United States (U.S.) has several missions on the horizon that will require a capability in Automated Rendezvous and Capture (AR&C). However, NASA has not yet developed an AR&C capability that will allow these missions to be accomplished, nor does it have a serious technology program for developing such an AR&C capability. This is in stark contrast to other national and international agencies involved in space. The Russian Space Agency (RSA) was the first to develop an Automated Rendezvous and Dock (AR&D) capability. They used it extensively in resupplying their MIR space station and plan to use it for autonomously resupplying their part of the International Space Station (ISS). The European Space Agency (ESA) and Japan's National Space Development Agency (NASDA) do not have this capability as yet; but both have independent, ongoing technology programs for developing it. They too intend to use it for autonomously resupplying their part of the ISS; but they also have other broad, far-reaching uses for it. The U.S. Air Force (USAF) does not presently have this capability either. However, they too have future needs for it and have an ongoing technology program for developing it.

Because of the obvious disparity between the AR&C capability required by NASA for some future missions and the limited AR&C technology which it presently has available for accomplishing these missions, an assessment of AR&C technology was made. This paper presents the results of that assessment. The objectives were to: research the history of both manual and automated rendezvous and capture and rendezvous and dock and the systems which have flown in space (section II); identify NASA's future needs for AR&C in space (section III); review today's technology and ongoing technology efforts related to AR&C (section IV); in light of these, propose AR&C systems which can be matured in a reasonable amount of time with a reasonable amount of money and still meet the needs and requirements of future NASA missions (section V); develop a technology plan for maturing these systems (section VI); and offer any final comments and conclusions (section VII).

In order to effectively present the results of the AR&C technology assessment, it is necessary to define some terms which will be used throughout this paper. They are as follows. The chase vehicle is a spacecraft which has both attitude and translational control capability. It actively navigates to the target vehicle in the rendezvous process. The target vehicle is a passive spacecraft in the rendezvous process. It normally has only attitude stabilization capability. Phasing is the initial segment of the rendezvous process that gets the chase vehicle to within about 40 kilometers of the target vehicle. Proximity operations is the next segment, when the chase vehicle navigates from about 40 kilometers to within about 100 meters of the

target. The terminal phase is the final segment, when the chase vehicle closes from about 100 meters to the point of dock, capture, or berth. Docking means mechanically connecting the chase vehicle to the target vehicle by propelling the chase vehicle into the target vehicle at a nonzero linear velocity. Capture means mechanically connecting the chase vehicle to the target vehicle using mechanical devices on the chase vehicle which grasp structure on the target vehicle. Capture is like a zero velocity dock. Berthing is mechanically connecting the chase and target vehicles together using a manipulator arm on one of the vehicles. The manipulator arm grasps the other vehicle and positions it into restraints on the vehicle with the manipulator arm.

II. THE HISTORY OF MANUAL AND AUTOMATED RENDEZVOUS AND CAPTURE AND RENDEZVOUS AND DOCK

Virtually all of the world's space flight experience in manual and automated, rendezvous and capture and rendezvous and dock comes from the U.S. and the Russian space programs, and all of this is of the rendezvous-and-dock type. Interestingly enough, the U.S. took a manual approach to rendezvous and dock and one that was also mission unique; that is, the rendezvous-and-dock scenarios and timelines were all tailored to a specific mission. No attempt was made to standardize these. Consequently, the U.S. approach has been very labor-intensive and expensive, requiring extensive crew training and system redundancy to insure mission success. In contrast to this, the Russians pursued a course in rendezvous and dock that was primarily automated, with standardized operations. The flight crew was relegated to override and monitoring functions.[1]

The U.S. experience in rendezvous and dock dates back to the Gemini program of the 1960's, in which the in-flight rendezvous and dock tests and demonstrations served as a testbed for the Apollo lunar landing missions.[2] Here, the Gemini spacecraft was the chase vehicle and a modified Agena booster second stage was the target vehicle.[3] The modified Agena was inserted into a near circular orbit and stabilized along the local vertical. It was equipped with a special docking adapter that had a radar transponder to provide a strong return for radar signals transmitted from the Gemini's rendezvous radar. The docking adaptor also had two high-intensity flashing lights that provided good optical targets for the Gemini crew. The docking adapter had a spring and shock-mounted cone which mated with the Gemini nose and absorbed the docking forces.[4] The Gemini spacecraft carried two crewmen, who interacted with the onboard guidance and control system, in order to accomplish rendezvous and dock. A block diagram of the Gemini guidance and control system is shown in figure 1.[5] It is divided into pilot displays, the sensing and computing system, and the control system. In the sensing and computing system, the rendezvous radar, which is an interferometric type system, estimates range and bearing to the target vehicle. This information is supplied to the computer at a range varying from 450 kilometers to 150 meters; it is displayed to the crew, along with range rate, from 90 kilometers to 6 meters.[6] Also displayed to the crew are the Gemini attitude, attitude rate, and linear velocity change required for a midcourse rendezvous correction. This displayed information allows the crew to rotate the spacecraft to the correct attitude and fire the maneuver thrusters in order to produce the required velocity change, using the attitude and maneuver control handles that are a part of the control system. When the Gemini spacecraft is close enough to the target vehicle, the crew can complete the rendezvous and docking process using the control handles, observing the pilot displays, and observing the optical targets through windows in the spacececraft.[7] At some point in the approach, typically 60 meters to 15 meters separation, the rendezvous radar can no longer give an accurate estimate of range because of the closeness of the target. Then, visual observations of the docking targets by the crew are heavily relied upon.[8] Successful rendezvous and docks were accomplished by the flight crews on: Gemini VIII in March 1996, Gemini X in July 1966, Gemini XI in September 1966, and Gemini XII in November 1996.[9]

The Apollo program had a complete rendezvous and docking operation that was performed in lunar orbit. The approach was similar to that demonstrated in the Gemini program, which is of little surprise. Here, the ascent stage of the Lunar Excursion Module (LEM) was the chase vehicle. The Command/Service Module (CSM) functioned as the target vehicle. See figures 2 and 3.[10] The LEM ascent stage was launched from the lunar surface and then rendezvoused and docked with the CSM, which was parked in a circular lunar orbit. The LEM had two crewman that participated in all phases of the process from monitoring the launch from the lunar surface to "flying" the LEM during docking.[11] They interacted with the LEM guidance and control system in the rendezvous and docking procedures much like in the Gemini program. The LEM guidance and control system was similar to the Gemini's. It had a guidance digital computer, an inertial measurement unit (IMU), optical equipment for IMU alignment, and rendezvous radar. The rendezvous radar provided CSM range, range rate, and bearing to crew displays and to the guidance computer for maneuver computations. The operating range of the rendezvous radar was 740 kilometers to 24 meters. The guidance and control system equipment, along with crew displays and controls, were all utilized in rendezvous and docking. A diagram of the docking mechanism is shown in figure 4.

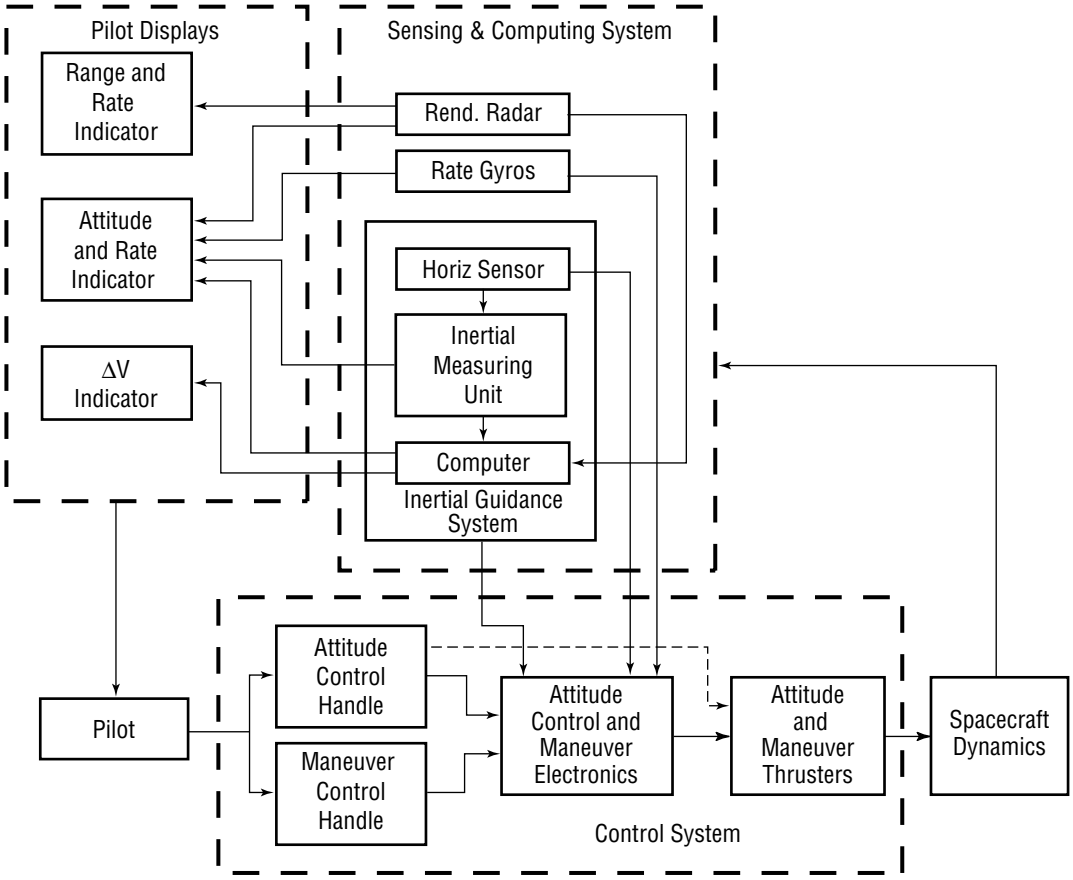

Figure 1. Gemini guidance and control system.

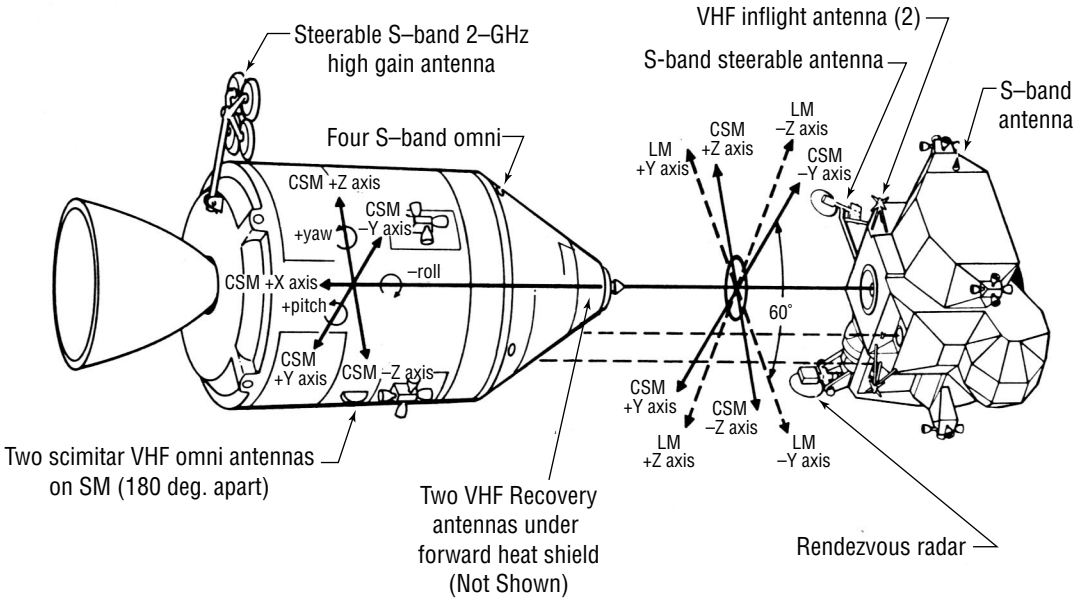

Figure 2. Apollo command/service module and lunar excursion module ascent stage.

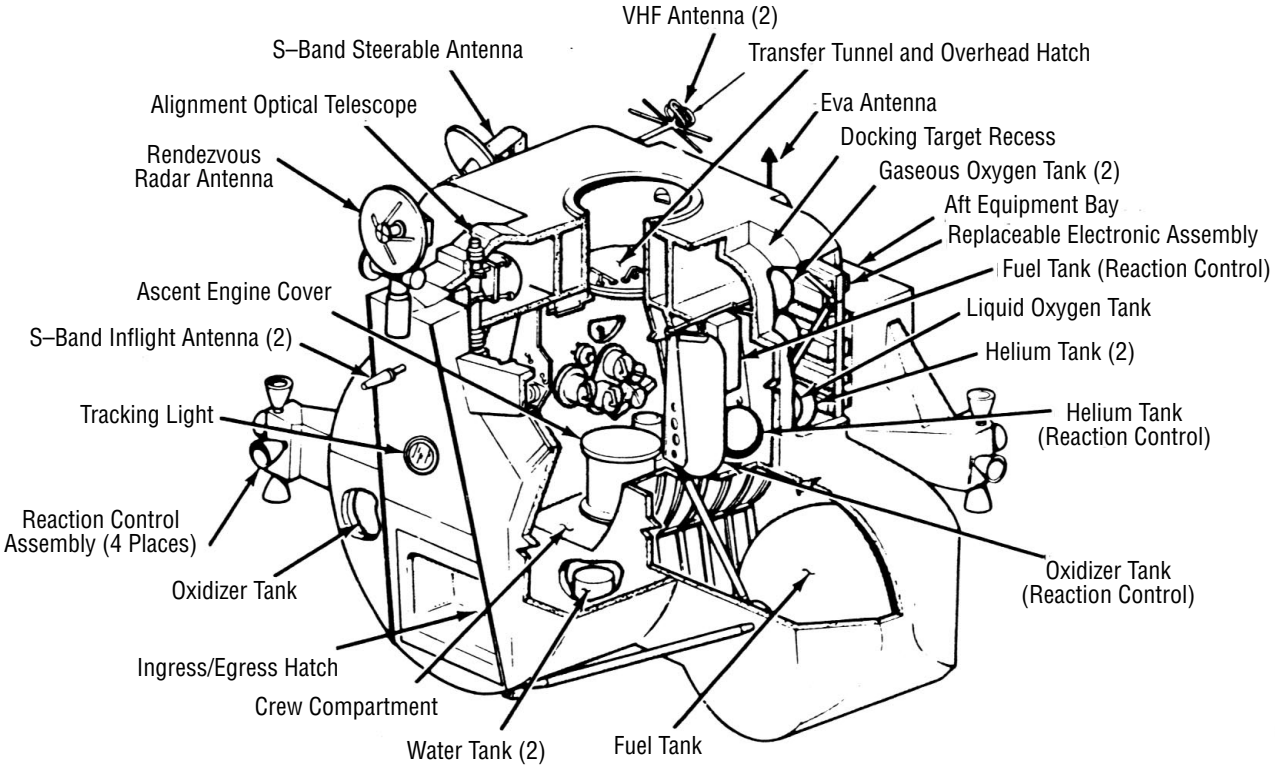

Figure 3. Apollo lunar module ascent stage.

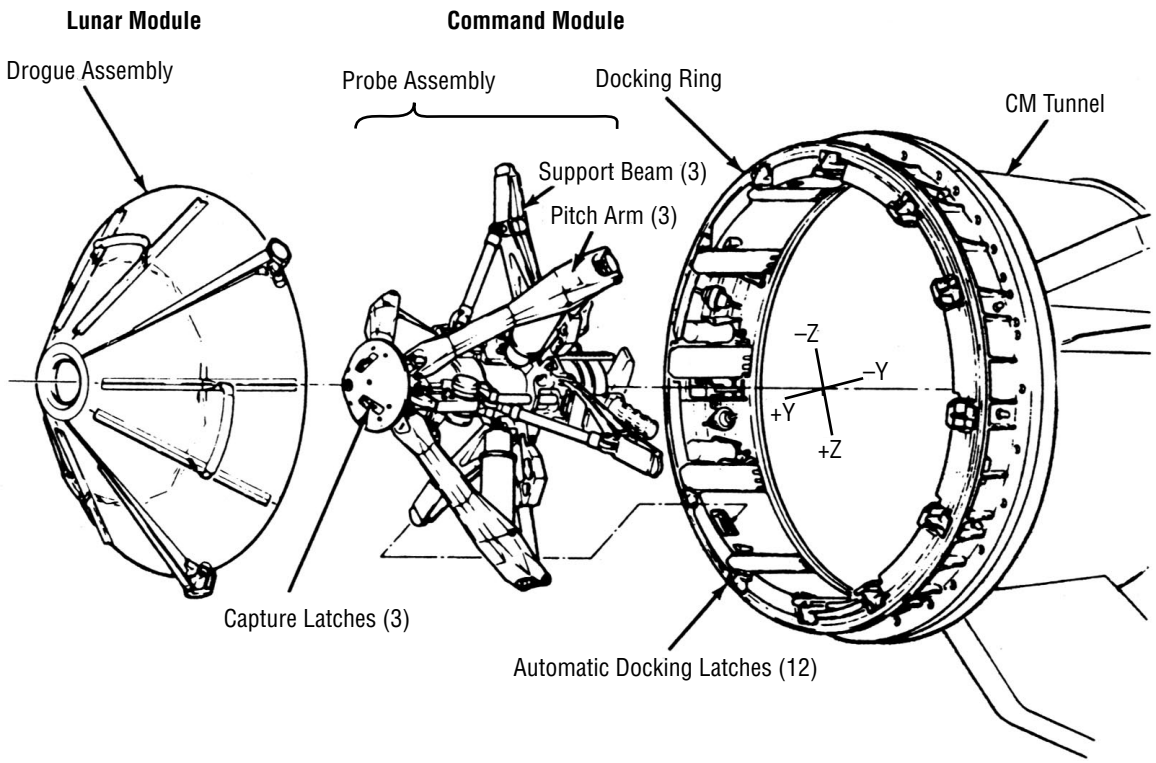

Figure 4. Apollo docking mechanisms.

The Space Shuttle Orbiter's approach to rendezvous and docking is much like its predecessors', which again is of no great surprise. Here, the Ground computes the rendezvous burns to get the Orbiter within 74 kilometers of the target. From this point on, most of the maneuvers are calculated and executed onboard, either automatically by the Orbiter's Guidance, Navigation and Control (GN&C) system or manually by the flight crew interacting with the GN&C system using hand controls and displays. The Orbiter's GN&C system is similar to the LEM's so far as rendezvous and docking are concerned. It has guidance digital computers, IMU's, optical equipment for IMU alignment, and rendezvous radar that are used in rendezvous and docking.[12] The rendezvous radar can operate in both active and passive modes. In the active mode, the target vehicle must have a transponder that generates a return signal for the radar signal transmitted by the Orbiter rendezvous radar. In this mode, the rendezvous radar has a range varying from 555 kilometers to 30 meters. In the passive mode, the return signal simply is the transmitted signal reflected off of the target vehicle. This is also known as skin tracking. In this case, the rendezvous radar has a range of 22 kilometers to 30 meters. In addition to this GN&C equipment for rendezvous and docking, the Orbiter also has three additional items that are used in the rendezvous and docking process.[13] There is the Trajectory Control Sensor (TCS), which is a laser ranging device that is mounted in the Orbiter's payload bay. It provides range, range rate, and bearing to the target for display to the crew at ranges varying from 1.5 kilometers to 1.5 meters. There is the centerline camera that is fixed to the center of the Orbiter's docking mechanism. The image from it is displayed to the crew as a visual aid for docking within about 90 meters of the target. The crew also has a hand-held laser ranging device that can be used during the approach to supplement range and range rate measurements made by the other navigation equipment.

A frequent target vehicle for the Orbiter is the Russian space station Mir. A typical scenario for the Orbiter to rendezvous and dock with the Mir is as follows. As the Orbiter approaches, its rendezvous radar will begin tracking the Mir and measuring range, range rate, and bearing. The Orbiter crew will also begin air-to-air communications with the Mir crew using a VHF radio. As the Orbiter reaches close proximity to the Mir, the TCS supplements the Orbiter's navigation information by supplying additional data on range, range rate, and bearing. In addition, the crew begins using the hand-held laser ranging device to supplement the other measurements of range and range rate. The Orbiter crew will "fly" the Orbiter toward the Mir using aft flight deck controls. Viewing displayed images from the centerline camera, the Orbiter crew will center the Orbiter docking mechanism with the Mir docking module mechanism, continuously refining this alignment as the Orbiter approaches within 90 meters of the Mir. At a distance of about 9 meters from the Mir, the Orbiter crew will stop the Orbiter, stationkeep momentarily, and adjust the docking mechanism alignment, if necessary. Then, a go or no-go decision to proceed with the docking will be made by the flight control teams at both the NASA Johnson Space Center and Moscow. When the Orbiter proceeds with docking, the Orbiter crew will use ship-to-ship communications with the Mir to inform the Mir crew of the Orbiter's status and keep them informed of major events, like the confirmation of contact, latch up, and the completion of damping. Damping is the decaying relative motion between the Orbiter and the Mir that occurs after docking and is positively affected by the shock-adsorber-type springs within the docking device. These springs also help to gently push the Orbiter away from the Mir during undocking.

The Russians took a different approach to rendezvous and docking, one that was primarily automated with the crew being used for monitoring and manual backup functions. Their effort in AR&D dates back to October 1967 when they joined two unmanned Cosmos spacecraft in orbit.[14, 15] The AR&D system that they have developed and refined over the years has been used repeatedly for docking the unmanned Progress and the manned Soyuz vehicles to the Mir. They also plan to use this system for docking their vehicles to the ISS. Interestingly, the hardware in this system is similar to that employed in the manual rendezvous and docking systems flown by the U.S. It includes guidance digital computers, IMU-type inertial sensors (i.e. rate gyros and accelerometers), optical devices for inertial sensor alignment, rendezvous radar, and TV cameras. The rendezvous radar system is called Kurs. Appropriate displays and controls are available to the flight crews and ground controllers to "fly" the system manually, if desired or required. The displays include both data and TV camera images.[16–18] Docking devices employed include both the rod-and-cone type system and the Androgynous Peripheral Assembling System (APAS).[14] See figures 5 and 6, respectively. The latter was originally developed for the Apollo-Soyuz rendezvous and dock in 1975.[19]

The AR&D scenario for rendezvous and docking the Soyuz or the Progress vehicles to the space station Mir is as follows.[20] The process begins with the Mir transmitting a beacon radio frequency (RF) signal from hemispherical-coverage antennas on the ends of its solar panels. The chase vehicle, which could be either the Soyuz or the Progress, has a gimballed, 0.5-meter dish antenna that searches for this signal. The 0.5-meter dish antenna system can detect and acquire it up to 200 kilometers away. Once this is accomplished, the gimballed antenna then begins to angle track the signal from the Mir. At this point, the RF beacon signal is turned off and a transponder on the Mir is connected to the antennas on its solar arrays. The chase vehicle now uses the return signal from the transponder to determine range using the time delay and range rate using the Doppler shift of the returned signal. Using this information, the chase vehicle closes in on the Mir until a range of about 200 meters. At this point, the chase vehicle executes a fly-around maneuver at a constant range of 200 meters, until signals from three docking antennas mounted around the selected docking port on Mir are received. Each docking port on Mir has three docking antennas like these.

The transponder on Mir now begins to transmit through one of these antennas in order to provide range and range-rate information to the chase vehicle. Relative attitude is also derived from the signals received from the three docking antennas.[21] The chase vehicle now proceeds with the approach. At 20 meters separation, relative attitude can no longer be derived from the docking antenna signals. Now, the integrals of the rate gyro outputs are relied upon for attitude information. The automatic docking process can be aborted by turning off passive equipment on the Mir. Then, the chase vehicle performs an automatic backaway maneuver. When the Soyuz is the chase vehicle, it can be manually docked by the Soyuz flight crew using hand controls and displays.[16] When the Progress is the chase vehicle, it too can be manually docked. In this case, docking is accomplished by the Mir crew or ground controllers, using similar hand controls and displays.[17, 18, 22] Commands from the hand controls and data for the displays are telemetered between the Mir and the Progress, and the Mir and the ground stations.

Some comments about the Russian AR&D system are in order. While this system does the job for which it was designed, it has some significant drawbacks. The Kurs radar system can only be procurred from one source, namely NPO Energia in Russia. Its electronics consume a lot of power, must be cooled by forced air, and use vacuum tube technology with questionable lifetime. Little is known about the construction of the electronic parts. Their docking devices require high impact loads in order to latch up.

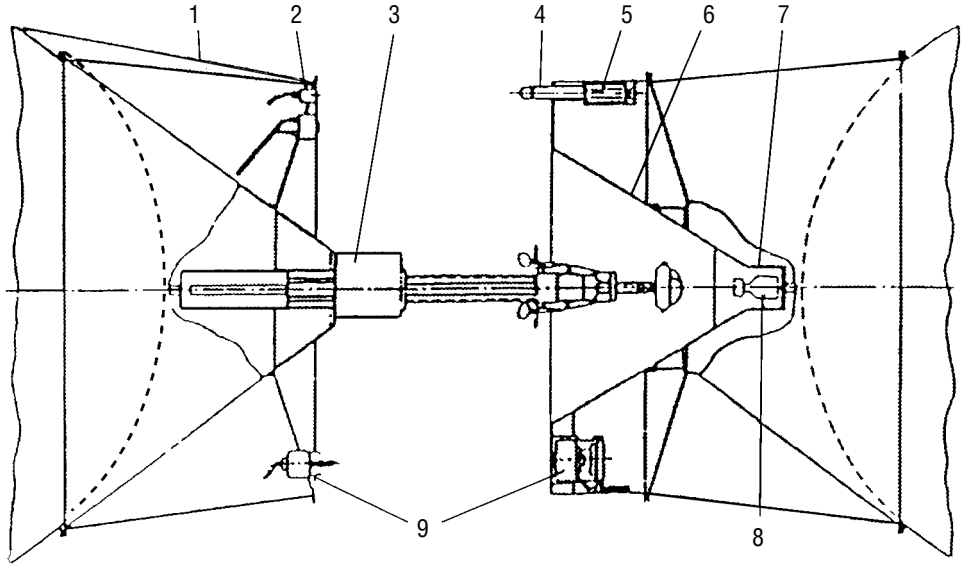

Legend: (1) Active Docking Assembly; (2) Socket; (3) Docking Mechanisms; (4) Guide Rods; (5) Passive Docking Assembly; (6) Receiving Cone; (7) Socket; (8) Grooves for Latches; (9) Electrical Connectors

Figure 5. Soyuz docking assemblies.

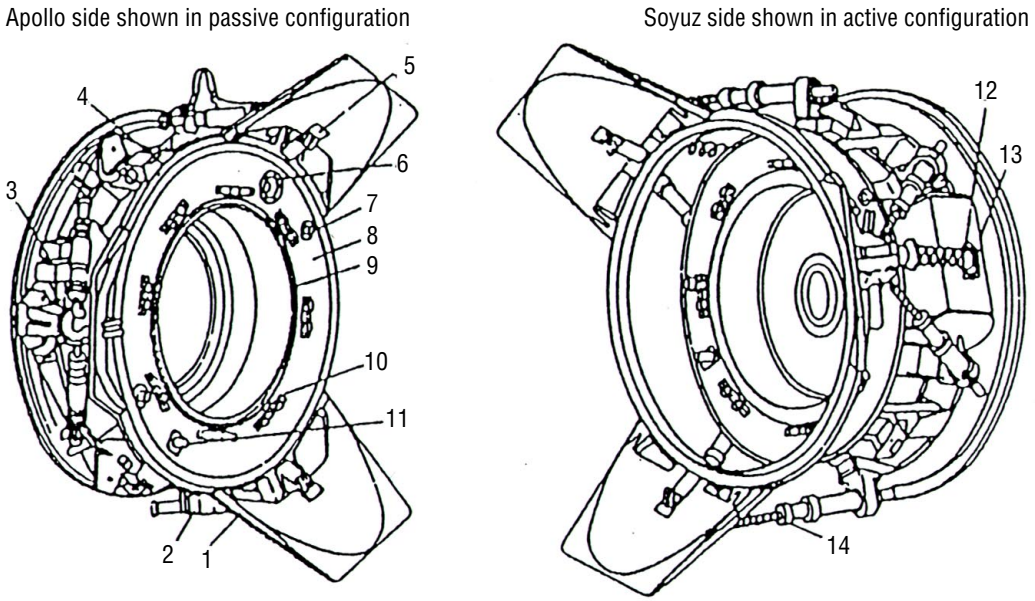

Legend: (1) Ring with guides; (2) Hudraulic shock absorbers; (3) Docking mechanism drive; (4) Latch catch; (5) Latch; (6) Socket; (7) Push rod; (8) Docking frame; (9) Seal; (10) Lock; (11) Guide rod; (12) Spring cable; (13) Differential unit; (14) Screw with converter

Figure 6. Apollo/Soyuz docking mechanisms.

III. THE NEED FOR AUTOMATED RENDEZVOUS AND CAPTURE IN SPACE

The need for AR&C in the U.S. space program surfaces periodically in two distinct places. One is in the autonomous delivery of unmanned vehicles to the ISS for reboost and/or resupply. The other is in the execution of unmanned and manned missions to and from Mars.

In the early 1990's, the Cargo Transfer Vehicle (CTV) was conceptualized as an unmanned, orbital stage for the National Launch System (NLS), a joint project of NASA and the Department of Defense (DOD). One of the functions of the CTV was to resupply the ISS by transferring payloads from the NLS to the ISS.[23] Hence, an automated, active unmanned space vehicle was to operate in the vicinity of and dock with an essentially passive, manned space vehicle. This requirement for AR&C led NASA Headquarters in 1991 to conduct a comprehensive evaluation and review of the U.S. capabilities in AR&C.[24] Other independent assessments of it were made in 1993.[25, 26] In all cases, the conclusion was that the AR&C capability required by the CTV and other vehicles on the horizon did not exist and needed to be developed. Somewhere in this timeframe, it was decided to resupply the U.S. part of the ISS with the Space Shuttle and the CTV and the NLS projects were cancelled.

In the fall of 1993, the Russians became an active participant in the ISS program. Their involvement included building the FGB and the Service Modules for periodically reboosting the ISS. They planned to use the AR&D system that they developed for the Soyuz and Progress vehicles to deliver the unmanned Service Modules to the ISS. In 1995, there was concern that the Russians did not have the wherewithal to build the Service Modules as they had committed to do. Then, NASA began defining the requirements for a vehicle to replace the Service Modules, in case the Russians could not deliver them. This vehicle was called the U.S. Control Module (USCM) and had a requirement for AR&C.[27] Derived capture requirements for the USCM to be able to capture with the ISS were generated and are as follows. The position of the USCM relative to the ISS must be controlled to ±1.5 centimeters in each axis. The attitude of the USCM relative to the ISS must be controlled to ±0.5 degrees in each axis. The magnitude of the linear velocity of the USCM center-of-mass relative to the ISS must be controlled to ±1.5 centimeters/second. Subsequently, it was determined that the Russians would indeed build the Service Modules and the USCM project was cancelled.

Now on the horizon is the VentureStar Reusable Launch Vehicle (RLV), being developed by Lockheed Martin with NASA support. It will be primarily an unmanned vehicle, which necessitates a fully autonomous capability. An important use of the VentureStar RLV will be to ferry cargo to and from the ISS, which again leads to the requirement for AR&C.[28] Again the need for AR&C to autonomously deliver unmanned vehicles to the ISS for reboost and/or resupply has surfaced. This is a requirement that just will not go away.

AR&C has also been identified as a needed technology for executing unmanned and manned missions to and from Mars. In the mid 1970's, studies of an unmanned Mars sample return mission showed the need for AR&C in Mars orbit in order to reduce the payload required so that spacecrafts of the day could be used to execute the mission.[29, 30] In this concept, a Mars orbiter and a Mars lander make the journey to Mars. The orbiter is inserted into Martian orbit, while the lander descends to the surface. A 1-kilogram soil

sample is collected and stowed in a sample canister on the ascent stage of the lander. The ascent stage then lifts off from the surface into orbit around Mars. Subsequently, the orbiter rendezvous and captures with the ascent stage. The soil sample canister is then transferred to the orbiter. Now, the ascent stage separates and the Earth return portion of the orbiter makes its way back to Earth. While the Mars sample return mission studied in the 1970's never proceeded to fruition, new studies of Mars sample return missions have recently begun, with assumed launch dates in 2005 and 2007. These studies are producing a mission concept that is similar to the one generated in the 1970's, with a requirement for AR&C. The following is a leading scenario for the AR&C concept associated with these missions.

Star trackers and IMU rate sensors on the orbiter enable the attitude and attitude rate of this spacecraft to be accurately determined and controlled onboard. The orbit ephemeris of the orbiter is accurately determined on Earth based on ground tracking of the spacecraft. This is accomplished by transmitting from Deep Space Network (DSN) ground stations on Earth to the spacecraft an extremely accurate and stable carrier frequency modulated with a pseudo-random signal. A transponder on the spacecraft retransmits this signal back to Earth at a different carrier frequency. Based on the transport lag (i.e. time delay) between the transmitted and the returned signal, range is determined. Based on the Doppler shift of the returned signal, range rate is determined. Observing these parameters over a period of time allows the orbit ephemeris of the orbiter to be accurately determined on Earth.

Star trackers and IMU rate sensors on the ascent stage enable the attitude and attitude rate of this spacecraft to be accurately determined and controlled onboard. The orbiter is equipped with a transceiver. It also has a direction finder with antennas and associated electronics. The ascent stage has a transponder. The orbiter transmits a pseudo-random encoded RF signal to the ascent stage transponder, which retransmitts it back to the orbiter, but at a different carrier frequency. Based on the transport lag (i.e. time delay) between the transmitted and the returned signal, relative range between the two spacecraft is determined onboard the orbiter. The relative range rate between the two spacecraft is determined onboard the orbiter by differencing range measurements and dividing by the time interval between these measurements. Information derived from the returned signal from the ascent stage that is received by the direction-finder antennas enables the direction-finder electronics to compute the direction of the relative-range vector in orbiter body-fixed axes. The relative-range magnitude, direction, and rate-of-change versus time are then transmitted back to Earth. This information and the estimated orbit ephemeris of the orbiter enable the ground to accurately compute the orbit ephemeris for the ascent stage.

Knowing the orbit ephemeris of both spacecraft on Earth enables the ground to compute the orbiter delta-velocity commands required for the orbiter to rendezvous with the ascent stage. These delta-velocity commands and the associated orbiter attitude commands are transmitted to the orbiter from the ground and executed by the orbiter. Using this process and iterating, the orbiter can rendezvous to within 1 kilometer of the ascent stage. At this point, the transceiver and direction finder on the orbiter, the transponder on the ascent stage, and the orbiter's GN&C system are used to autonomously rendezvous the orbiter to within 100 meters of the ascent stage. At this point, an optical guidance system on the orbiter determines the relative position and orientation of the orbiter with respect to the ascent stage. This information and measurements from orbiter IMU accelerometers and rate sensors are input into the orbiter's onboard GN&C system and used to autonomously execute the terminal phase of rendezvous and capture with the ascent stage, or the soil sample canister on it. Required accuracies of the orbiter optical guidance system, the IMU, and the closed loop GN&C system for rendezvous and capture are on the order of 1 centimeter,

1 centimeter/second, and 1 degree. The required accuracy of the orbiter and ascent stage star trackers for attitude determination and control is in the neighborhood of 2 milli-radians or 7 arc-minutes.

Recently initiated studies of a human Mars mission in 2011 are also generating a requirement for AR&C, both in Low Earth Orbit (LEO) and in Mars orbit. The following is a leading scenario for the AR&C concept in LEO, assuming a chemical Trans Mars Injection (TMI) stage.[31] The Liquid OXygen (LOX)-only element of the TMI stage is launched into LEO first. It plays both an active and passive role in the AR&C process. It has Global Positioning System (GPS)/Inertial Navigation System (INS) for attitude, attitude rate, position, and velocity determination. On one end is a UHF transmitter and a Video Guidance Sensor (VGS) target.[32] These are utilized when the LOX-only element plays the role of a passive vehicle in the AR&C process. On the other end is a VGS, which is used in the terminal phase of AR&C when this LOX-only element is part of the active vehicle in the AR&C process. The payload vehicle will be launched into LEO second. It plays an active/chase vehicle role in the entire AR&C process. It has a propulsion system for orbit adjust. It has a Reaction Control System (RCS) system configured for attitude and translational control. It has GPS/INS for attitude, attitude rate, position, and velocity determination. It has a UHF receiver to receive GPS information transmitted by the passive/target vehicle for relative GPS. It has a VGS for the terminal phase of AR&C. The LOX/Liquid Hydrogen (LH_2) element of the TMI Stage is launched into LEO last. It is a passive/target vehicle in the AR&C process. It has an RCS for 3-axis attitude stabilization. It has GPS/INS for attitude, attitude rate, position, and velocity determination. It has a UHF transmitter to transmit GPS information to the active/chase vehicle for relative GPS navigation on the active/chase vehicle. It has a VGS target for the terminal phase of AR&C.

After the LOX-only element has been launched and inserted into LEO and prior to launching the payload vehicle, the orbit ephemeris for the LOX-only element is accurately determined by the Ground. This information is loaded into the payload vehicle's On-Board Computer (OBC) while it is still on the launch pad. After the payload vehicle is launched and separated from its launch vehicle, the payload vehicle's GPS information begins to update the state vector and attitude propogated by its INS. The payload vehicle's OBC software now begins to determine the orbit ephemeris for the payload vehicle using the GPS/INS state vector estimates. Every 12 hours, the Ground uplinks new parameters for the LOX-only element orbit ephemeris model, that is stored in the payload vehicle OBC. Based on the onboard orbit ephemeris models of both vehicles in the payload vehicle OBC, the OBC software computes and issues commands to execute a series of phasing maneuvers for the payload vehicle in order to approximately align the orbit plane of the payload vehicle with that of the LOX-only element. The propulsion system provides the thrust for these maneuvers. The RCS system generates the torques for attitude control. Now, translational maneuvers are computed and executed by the payload vehicle to maneuver itself close enough to the LOX-only element so that it can receive GPS information transmitted by the LOX-only element's UHF transmitter. Typically, the payload vehicle must be within 7 kilometers of the LOX-only element for this to happen.

At this point, relative GPS is used for navigation and the RCS system is used for both translation and attitude control, in order to rendezvous the payload vehicle to within about 100 meters of the LOX-only element. Now, sensing for rendezvous and capture is transferred to the VGS on the payload vehicle. A target for the VGS is mounted to the LOX-only element. The VGS determines the relative position and orientation of the payload vehicle with respect to the LOX-only element. This information and measurements from the INS are used to autonomously execute the terminal phase of rendezvous and capture with the LOX-only element. A zero-velocity capture is required. The required accuracies of the

payload vehicle VGS, INS, and closed loop GN&C system for rendezvous and capture are on the order of 1 centimeter, 1 centimeter/second, and 1 degree. At this point, the AR&C process is repeated with the LOX/LH_2 element as the target/passive vehicle and the LOX-only-element/payload-vehicle as the active/chase vehicle.

In the human Mars mission, AR&C is also needed in Mars orbit in order to return the crew to Earth. In this case, the crew will be relegated to manually backing up the automated procedures for the following reasons. It will take them 180 days to reach the planet. Following this, there will be a 500-day stay on the surface.[31] Then, the rendezvous and capture procedures will be executed in Mars orbit, nearly two years after the crew first left Earth. Since they will not be able to practice rendezvous and capture techniques either enroute to Mars or on the planet, it is risky or even dangerous to rely on them as the primary means for accomplishing this critical phase of the mission. Hence, AR&C is the primary approach. A promising scenario for accomplishing it in this situation is as follows.

The Trans Earth Injection (TEI) stage is a Mars orbiting vehicle and is the passive/target vehicle in the AR&C process. It has an RCS system for 3-axis attitude control. It has star trackers and an IMU. The star trackers and rate sensors in the IMU allow vehicle attitude and attitude rate to be accurately determined onboard. The TEI stage has a transponder that is used in orbit determination and in the AR&C process. The orbit ephemeris of the TEI stage is accurately determined on Earth based on ground tracking of the spacecraft. This is accomplished by transmitting from DSN ground stations on Earth to the spacecraft an extremely accurate and stable carrier frequency modulated with a pseudo random signal. A transponder on the spacecraft retransmits this signal back to Earth at a different carrier frequency. Based on the transport lag (i.e. time delay) between the transmitted and the returned signal, range is determined. Based on the Doppler shift of the returned signal, range rate is determined. Observing these parameters over a period of time allows the orbit ephemeris of the Orbiter to be accurately determined on Earth.

The Earth Crew Return Vehicle (ECRV), which is the ascent stage of the Mars Lander, has a propulsion system for ascent. It has an RCS system for 3-axis attitude control and 3-axis translational control. It has star trackers for attitude determination. It has an IMU that is used in determining attitude, attitude rate, position, and velocity. The ECRV is also equipped with a transceiver and a direction finder with antennas and associated electronics. It also has a VGS. The Mars Lander has a transponder which aids the Ground in accurately determining the location of the Lander on the surface of Mars. The procedure for doing this is the same as that used to determine the TEI stage orbit ephemeris. Knowing the location of the ECRV on the surface of Mars and knowing the orbit ephemeris of the TEI stage enables the Ground to compute orbit adustment burns for the TEI stage in order to place it in a favorable orbit for the ECRV to rendezvous with it. The commands for these burns are telemetered to the TEI stage from the ground stations on Earth. Once a favorable orbit is achieved by the TEI stage, the Ground telemeters to the ECRV are the parameters for this orbit. These are loaded in the ECRV's OBC. Now the Ground determines the commands for ECRV ascent that will place it in Mars orbit and close enough to the TEI Stage to be within range of the TEI's transponder. Typically, this is 7 kilometers or less. Once the ascent is completed and the ECRV is in range of the TEI stage's transponder, the ECRV uses its transceiver, direction finder, IMU, and RCS system to rendezvous within about 100 meters of the TEI stage.

At this point, the VGS on the ECRV determines the position and orientation of the ECRV relative to the TEI stage. Outputs from it and the IMU are used to generate commands for the ECRV RCS system, in

order to execute the final stage of AR&C of the ECRV with the TEI stage. The required accuracy of the ECRV's VGS, IMU, and closed-loop GN&C system for AR&C are on the order of 1 centimeter, 1 centimeter/second, and 1 degree. The required accuracy of the star trackers on the ECRV and the TEI stage is on the order of 2 milli-radians or 7 arc-minutes.

While AR&C will be needed for autonomous resupply of the ISS and the execution of unmanned and manned missions to and from Mars, other requirements for AR&C are also on the horizon. In the late 1980's and the early 1990's, the Orbital Maneuvering Vehicle (OMV) was conceived as an ISS-based vehicle for autonomous satellite retrieval and servicing.[33] It had a requirement for AR&C. This vehicle was never built because of funding problems in the post-Challenger era, but spaced-based systems that provide the capability for autonomous satellite retrieval and servicing are still being studied.[34, 35] DOD has a future need for AR&C with space vehicles that it is developing, like the Military Spaceplane and the Space Maneuver Vehicle.[36, 37] It plans to do satellite retrieval with both cooperative (i.e. stabilized), noncooperative (i.e. nonstabilized), and uncooperative (i.e. evasive) targets. The Crew Return Vehicle (CRV) that NASA is building as a lifeboat for the ISS crew would need AR&C if it is to be delivered to the ISS autonomously. Advanced concepts for space solar power generation rely heavily on AR&C for assembling large power-generating systems in Earth orbit, one piece at a time, cheaply and autonomously.[38]

IV. TODAY'S TECHNOLOGY AND ONGOING TECHNOLOGY EFFORTS RELATED TO AUTOMATED RENDEZVOUS AND CAPTURE

Having defined the needs and requirements for AR&C in space, the next step is to review today's technology and ongoing technology efforts related to AR&C. Then, it can be determined if and how these can contribute toward meeting the needs and requirements for AR&C. AR&C-related technology efforts exist at three NASA centers: Marshall Space Flight Center (MSFC), Johnson Space Center (JSC), and the Jet Propulsion Laboratory (JPL). Outside NASA, they exist within the U.S. Air Force (USAF), the European Space Agency (ESA), Japan's National Space Development Agency (NASDA), and The Charles Stark Draper Laboratory in Cambridge, MA. The remainder of this section will be devoted to reviewing the past and present AR&C-related technology involvements at these places and organizations.

MSFC's AR&C technology program first started in 1987, when they began developing AR&C technology for the OMV.[32] While the OMV was eventually cancelled, the AR&C technology program continued, because of the need for this technology on other programs like the CTV, the USCM, the RLV, the CRV, and the Mars missions. Principle products of it have been the the Flight Robotics Laboratory (FRL), the VGS, precise navigation algorithms for relative GPS, GN&C flight software algorithms, and the Three-Point Docking Mechanism (TPDM).

The FRL is a world-class facility that was built for testing new AR&C technology.[39] It has a 26 meter x 13 meter precision epoxy flat floor which can support various simulators and low-friction, air-bearing platforms. The flat-floor area supports operations of the spacecraft air-bearing simulator and the dynamic overhead telerobotic simulator in a black-out area for static and dynamic orbital lighting tests. The spacecraft air-bearing simulator is used for docking mechanism and video guidance development, calibration, and demonstration. The dynamic overhead telerobotic simulator can dynamically position up to 500 kilograms of sensors and flight hardware (H/W) with 1 centimeter accuracy for real-time simulation of orbital dynamics, vehicle dynamics, and orbital lighting conditions. MSFC has other ground-based test facilities which were developed for other programs, but which do support ground testing of AR&C technologies. These include the space operations and mechanisms testbed, also known as the "6DOF." It provides high-fidelity hardware-in-the-loop simulation of the contact and vehicle dynamics for full-scale docking and berthing mechanism evaluation.

The VGS is an optical sensor that measures the range, bearing, and attitude of the chase vehicle relative to the target vehicle in the terminal phase of AR&C, out to about 100 meters.[32] This device was developed and patented by engineers at MSFC. It consists of a sensor head assembly on the chase vehicle and a target on the target vehicle. The sensor head assembly has ten laser diodes, a solid-state video camera, a video frame grabber and digitizer, and a microprocessor. See figure 7. Five of the laser diodes operate at 780 nanometers wavelength, while the other five operate at 830 nanometers. Each diode emits 30 milliwatts of laser light in approximately a 10 degrees $\times$ 30 degrees beam. The diodes are arranged to produce approximately even light intensity over a 30 degrees $\times$ 30 degrees field-of-view at each wavelength. Hence, the target is illuminated with equal light intensity at both wavelengths. In the concept of figure 7, the target has four corner-cube retroreflectors. The middle retroreflector is mounted on a pole. In front of each

retroreflector is an optical bandpass filter, with a center frequency corresponding to 830 nanometers wavelength. The filtered retroreflectors will reflect light at 830 nanometers wavelength, but will filter it at 780 nanometers. This allows the target to be more easily discriminated from background clutter. The 830 nanometer laser diodes and the 780 nanometer laser diodes are alternately turned on and off. Digitized pictures of the alternating scenes are acquired using the video camera, the frame grabber, and the microprocessor. These are subtracted in the microprocessor in order to produce images of the target retroreflectors. From these images, relative range, bearing, and relative attitude are computed 2 times per second. See figure 8 for a logic flow of this sequence. The accuracy of the computed relative range is ±0.3 centimeters in each axis. The accuracy of the computed relative attitude is ±0.25 degrees in each axis. The relative range rate can be derived from the relative range computations to an accuracy of ±0.3 centimeters/second in magnitude.[40] All of these are well within the system requirements previously specified for the USCM to capture with the ISS or for AR&C to be successfully executed in the Mars missions.

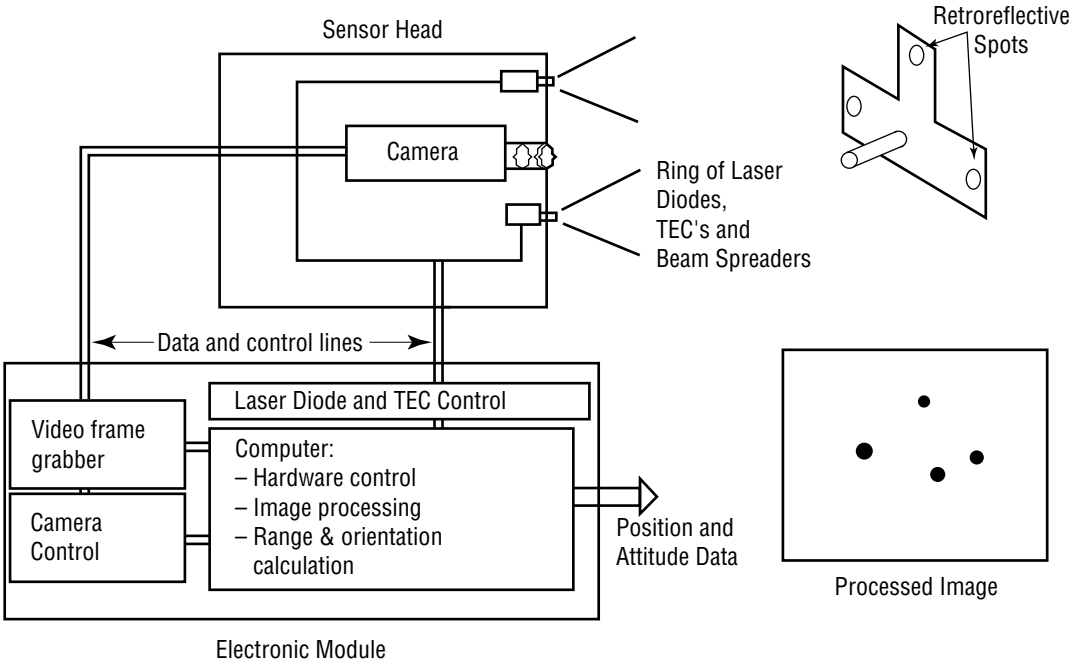

Figure 7. VGS diagram.

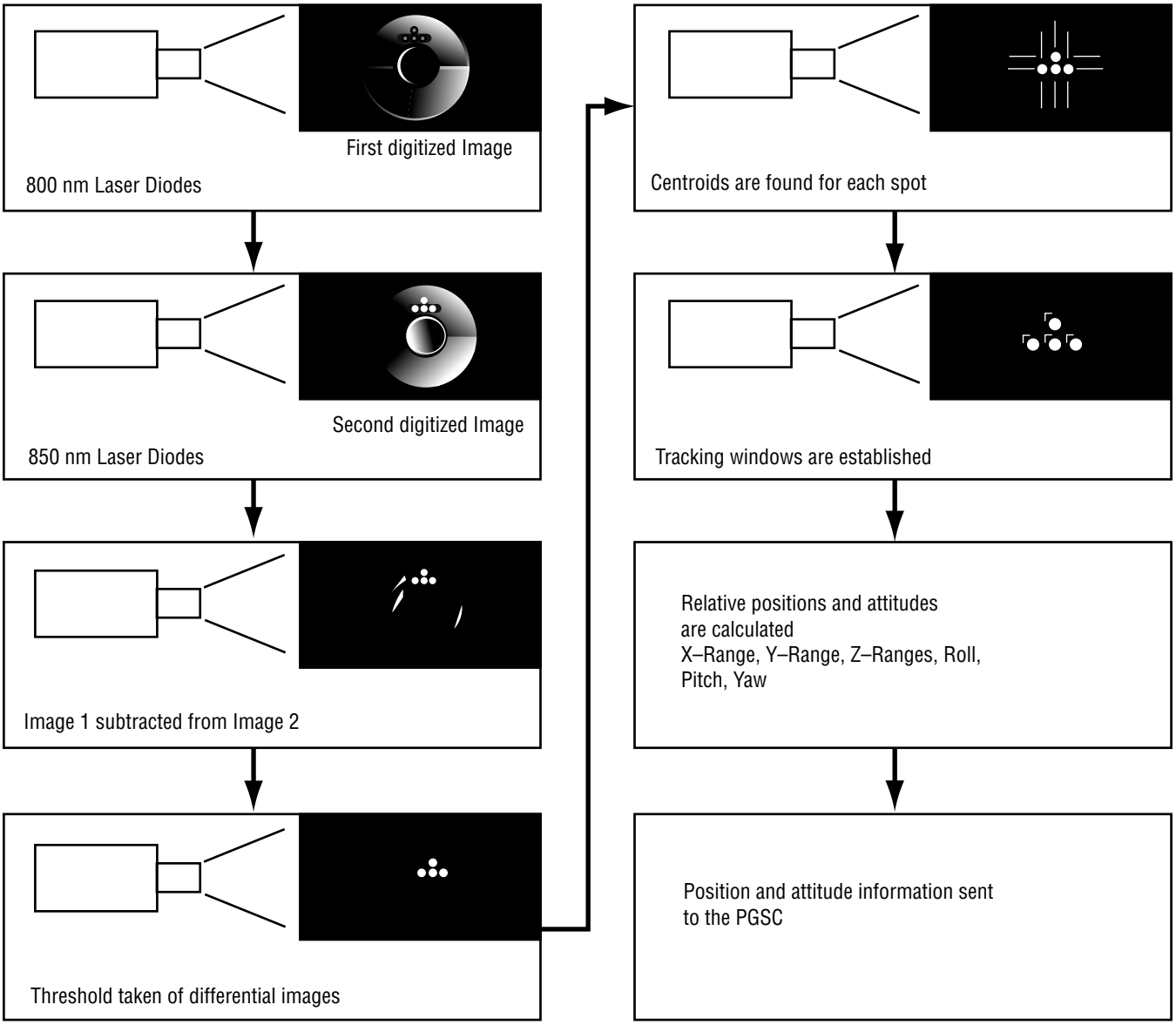

Figure 8. VGS logic flow diagram.

The VGS concept just described has a passive target. An alternative concept is to make the target active by using laser diodes on it, instead of on the sensor assembly, and eliminating the corner-cube retroreflectors on the target. This approach offers the potential for significant savings in power and mass and is preferrable in Mars-mission applications where these parameters must be minimized. In fact, JPL has baselined the VGS with an active target for the Mars sample return missions. See appendix A. The passive target approach is more attractive in ISS applications where power and mass are not that important, but avoiding the need to deliver power to the target is highly desirable.

The VGS was flight tested on the STS-87 Shuttle mission in November, 1997. A passive target was mounted on a free-flying Spartan spacecraft. The sensor head assembly was mounted in a Get Away Special CANister (GAS CAN) in the Shuttle payload bay. The plan was for the Spartan to be deployed by the Shuttle Remote Manipulator System (RMS). The Shuttle was to then back away from the Spartan and then reapproach it while the VGS generated open-loop measurements of range, bearing, and attitude relative to the Spartan. However, the Spartan experienced power-up problems upon deployment and this part of the mission never went as planned. No VGS data was collected with the Spartan deployed. However, 10 minutes of VGS data was collected with the Spartan attached to the end of the RMS. This data verified the predicted performance of the VGS at close ranges, on the order of 10 meters. The VGS and the Spartan will be reflown on STS-95 in October 1998 with the goal of collecting data from 10 meters to 100 meters.

Another technology that has been developed in the MSFC AR&C technology program has been precise navigation algorithms for relative-GPS operation. These were developed under Small Business Innovative Research (SBIR) contracts to Mayflower Communications Company with support from MSFC engineers.[41] The result was a 19-state Kalman filter that processes relative-GPS measurements in order to estimate relative range to an accuracy that is on the order of 1 meter. The algorithms have been successfully tested in the FRL with hardware-in-the-loop simulations. A Phase II SBIR contract to Mayflower, with participation by MSFC and JSC engineers, is presently underway. The goal of this study is to augment the 19-state Kalman filter with a 13-state Kalman filter in order to estimate relative range to an accuracy that is on the order of 1 centimeter.

GN&C algorithms for AR&C have also been developed in the MSFC AR&C technology program. These include all autopilot software (S/W) algorithms, orbital phasing maneuver algorithms for rendezvous, and Collision-Avoidance-Maneuver (CAM) algorithms. To date, about 40% of these have been tested in the FRL with hardware-in-the-loop simulations. The plan is to test the remainder of these in the near future.

The Three-Point Docking Mechanism (TPDM) is a device that was developed at MSFC for a zero-velocity capture. It consists of three claws on the chase vehicle and three trunnion bars on the target vehicle. The claws have multiple light-beam sensors that detect when a claw has passed around a trunnion bar. When two claws have captured their trunnion bars, they begin to close, which aids the third claw in capturing its trunnion bar. The TPDM is most suited for large vehicles like the RLV and the ISS.

JSC has a number of ground-based facilities for testing AR&C technology. These include the GPS test facility, the electro-optical and laser laboratory, the precision airbearing facility, and the inertial systems laboratory.[40] The GPS test facility provides the capability for testing and evaluating GPS receivers and algorithms with simulated signals and ground-received signals. The electro-optical and laser laboratory is designed for testing and verifying optical systems, both active and passive. It was built for performance

testing the TCS, the laser ranging device that was developed at JSC. The precision airbearing facility is an 8 meters x 7 meters, ultra-flat floor that allows the use of precise, low-pressure airbearings for testing AR&C technology. The inertial systems laboratory is used for testing inertial systems in a dynamic environment. It consists of a three-axis dynamic motion simulator table augmented with a test control system and a data retrieval system.

JSC developed the TCS and has used it as a crew aid for docking the Space Shuttle Orbiter to the space station Mir. They also plan to use it in a similar manner for docking the Space Shuttle Orbiter to the ISS. It mounts in the Orbiter's payload bay; target optical retroreflectors are mounted on the Mir. The TCS generates range, range rate, and bearing (azimuth and elevation) information relative to the Mir and displays this to the Orbiter crew at ranges varying from 1.5 kilometers to 1.5 meters. Range and range rate are determined to accuracies of ±3 centimeters and ±3 centimeters/second in each axis, respectively. This capability is adequate for the proximity operations phase of AR&C (400 kilometers to 100 meters), but is questionable for the terminal phase (less than 100 meters) in light of the AR&C performance requirements specified in section III. This device uses a pulsed laser to measure ranges from 1.5 kilometers to 400 meters. At ranges closer than 400 meters, a more-accurate continuous-wave (CW) laser diode modulated with three tones is used. The laser beams are scanned using a three-axis galvanometric beam-scanning system, which provides for a 20 degrees radius cone field-of-regard. "In the acquisition phase, the laser is scanned within the field of regard until a retroreflector is illuminated on the target vehicle. A quality retroreflector has the unique property that the incident and reflected laser beams are coaxial over about a 30 optical degree cone of angle. The laser energy returned by the retroreflector is detected and the range information for the near field CW operation is derived from the measured phase shift between the transmitted and received tones. This phase shift is due to the round trip travel time caused by the finite speed of light. Range rate is determined by back-differencing the CW range data. The range data from the pulsed operation is derived by time of flight. A high speed counter is used to determine the elapsed time from when the leading edge of a pulse is transmitted and when it is received after reflection from a target vehicle. The time delay is due to the round trip travel time caused by the finite speed of light. Range rate in this mode is determined by back-differencing pulsed range data. The azimuth and elevation angles are determined by the position of the optical scanners at the time a retroreflector was encountered. The azimuth and elevation rates are determined by back-differencing of azimuth and elevation data."[42]

JSC is also collaborating with the Sandia National Laboratories on a Scannerless Range Imager (SRI) sensor that may have application as a ranging device in AR&C. This sensor is being developed at Sandia National Laboratories for DOD use in terrain mapping. However, JSC plans to use it on their Autonomous Extravehicular Robotic Camera (AERCam) for ISS structural vibration identification.[43] In this scenario, the AERCam flies around and points at the ISS. The SRI sensor output provides accurate range and bearing information on the ISS structure. This information collected over time gives the structural dynamic characteristics of the ISS. The SRI sensor consists of an amplitude-modulated floodlight scene illuminator (laser or LED transmitter), a gain modulated image intensified Charge Coupled Device (CCD) video camera, and a digital signal processor that transforms intensified video imagery into range imagery. The SRI concept is based on CW optical radar technology. It uses a low-cost focal plane array integrating type detector and works by measuring the phase difference between a transmitted intensity-modulated optical signal and the corresponding reflected return signal from a target scene.[44] A test flight of the AERCam with the SRI sensor is scheduled for December 1998 on the STS-96 Space Shuttle mission.

JSC is also funding and managing the development of a Space Vision System (SVS) that is to be used as an aid in ISS assembly with the Space Shuttle RMS and the ISS RMS. It is conceivably applicable to AR&C, but probably has more potential use for Space Shuttle man-in-the-loop rendezvous and docking operations. This effort was originally funded and managed by the Canadian Space Agency, but funding difficulties caused it to be transferred to JSC. The SVS uses existing Space Shuttle payload bay camera views of targets on payloads and payload bay hardware to provide precise relative position, attitude, and rate cues in a concise graphical and digital format.[45] It was tested on the Space Shuttle STS-52 mission and provided RMS operators with precision position and attitude cues to support Canadian Target Assembly (CTA) unberthing, maneuvering, and berthing operations. It was also used in support of CTA deployment and free-flying proximity operations. An upgraded version of the SVS was then flown as a DTO on the Space Shuttle STS-74, STS-80, and STS-85 missions in order to further evaluate its on-orbit performance. It will fly again as a DTO on STS-91 in May 1998. For this mission, the plan was to test the feasibility of using it to provide range, range rate, and bearing for Space Shuttle proximity operations associated with man-in-the-loop rendezvous and docking. However, the flight software to do this was never developed in time.

Finally, JSC is sponsoring the development and qualification of a NASA Space Integrated GPS/INS called SIGI.[46, 47] Honeywell is under contract to JSC to develop this standardized, highly-integrated, autonomous navigation system with a GPS position, velocity, and attitude capability integrated with an advanced inertial system. It has a Trimble TANS Vector GPS receiver coupled with a Honeywell H-764G Inertial Measurement Unit (IMU). SIGI will offer three independent navigation solutions: INS, GPS, and blended GPS/INS. It has been undergoing flight testing and demonstration on the Space Shuttle and flew most recently on the Space Shuttle STS-89 mission in January 1998. Upon the completion of flight qualification in 1998, it will ultimately be applied to a variety of space vehicles, including the Space Shuttle, the ISS, and the CRV.

JPL has an AR&C-related technology development that will be used on the Deep Space Mission 3 (DS-3). DS-3 is the third mission in NASA's New Millennium Program and is scheduled to begin in the year 2002. Here, three spacecraft must be maintained hundreds of meters apart to an accuracy on the order of centimeters. The sensor for accomplishing this is the Autonomous Formation Flying (AFF) sensor, which was invented by several JPL engineers.[48, 49] The AFF sensor estimates the relative range and relative attitude between two spacecraft using GPS-type technology, although observations of GPS satellites are not required. Hence, it can be used in deep space or in LEO, with or without GPS satellite data. With this device, one spacecraft emits a pseudo-random encoded RF signal. GPS antennas and a receiver on the other spacecraft receive this signal and from it determine relative range and relative orientation. It can be used for rendezvous in a relative range varying from 1300 kilometers to 10 meters. It has the potential for use down to 1 meter, but this is "pushing the envelope." At 1 meter separation, electronic gain changes are required in order to reduce the RF energy emitted and avoid burning up hardware. Studies indicate that between 1300 kilometers and 10 meters this sensor can measure relative range to an accuracy of 1 centimeter and relative attitude to an accuracy of 1 arcminute, assuming a 1-meter separation of antennas. Multipath is a concern when the two spacecraft are close together, but JPL engineers have developed an algorithm to compensate for it; a patent for this invention is pending. Presently, the sensor can be regarded as having a Technology Readiness Level (TRL) of TRL-3 (analytical and experimental critical function and/or characteristic proof-of-concept) to TRL-4 (component and/or breadboard validation in laboratory environment). To date, ground demonstrations of the AFF sensor have been made using L-band RF signals,

which have a 20-centimeter wavelength. Ground demonstrations need to be done with Ka-band RF signals, which have a 1-cm wavelength, in order to achieve better accuracies. Funding for these demonstrations is expected in FY99. Besides using the AFF sensor for DS-3, JPL also plans to use it for Deep Space Mission 4 (DS-4) and the Mars sample return missions.

The USAF has a cooperative effort with NASA that involves a flight experiment with AR&C implications.[50, 51] It is a realignment of the USAF's Celementine II program that was recently cancelled. The flight experiment is called XSS-10 and is scheduled to fly in 1999. Its goal is to demonstrate automated rendezvous and inspection of a mothership by two micro-satellites. The plan is to carry a NASA Spartan spacecraft with two USAF micro-satellites to LEO on the Space Shuttle. Once the Space Shuttle reaches orbit, the flight crew deploys the Spartan using the RMS. The Space Shuttle then backs away to a safe distance. The first micro-satellite is then deployed from the Spartan. It moves away from the Spartan to a distance of 300-to-400 meters using a bipropellant hydrazine propulsion system. It then acquires and tracks (i.e. points at) the Spartan. The second micro-satellite is then deployed. It moves away from the Spartan to a distance of 50 meters using a cold gas propulsion system. It then rendezvous to within 3-to-5 meters of the Spartan. The micro-satellite GN&C systems will use GPS, IMU's, star trackers, and visible camera systems to accomplish rendezvous and inspection. Next, the micro-satellites are de-orbited and the Spartan is retrieved by the Space Shuttle and returned to Earth. The total program cost for XSS-10 is around $25M. Follow-on flights XSS-11 and XSS-12 are projected for 2001 and 2003, respectively. Ultimately, the goal is to demonstrate automated rendezvous and retrieval with noncooperative and uncooperative targets.

In the early 1980's, the European Space Agency (ESA) first began a program to develop a capability in AR&D, AR&C and Automated Rendezvous and Berthing (AR&B), with several future applications in mind. They saw future needs for these technologies in order to autonomously deliver: their future manned space shuttle Hermes to their future manned space station Columbus; Columbus to the ISS; Hermes to the ISS; and their unmanned Automated Transfer Vehicle (ATV) to the ISS.[52, 53] Manual override of the automated procedures by the flight crews on Hermes, Columbus, and the ISS, plus flight controllers on the Ground, was envisioned.[54] While Hermes and Columbus should be viewed as long range programs, ESA did commit in 1995 to build the ATV for refueling the ISS, reboosting the ISS orbit, delivering cargo to the ISS, and removing and destroying waste fron the ISS.[55] Its first flight is scheduled for 2003, with a probable flight every 15 months until 2013.[56] The ATV will be launched by an Ariane 5. Upon separation, it will attain a circular orbit. After 46 hours of phasing, it will rendezvous with the ISS and dock to the Russian Service Module attached to the ISS using the same docking port as the Russian Progress vehicle.[57] During the final approach that leads up to docking, it will execute a collision avoidance trajectory; if it suffers a major failure, it will automatically back off. Once docked to the Service Module, it will remain there for up to six months and be used several times to reboost the ISS. ISS waste will be transferred to it and it will separate from the ISS, de-orbit, and disintegrate as it reenters the Earth's atmosphere. Another ATV will eventually take its place.

The baseline GN&C concept for executing ATV AR&D has three IMU's for basic navigation information, two GPS receivers for absolute and relative position during the phasing and proximity operations segments of rendezvous, and a rendezvous sensor for relative range and relative attitude during the terminal phase. The rendezvous sensor is needed, because shadowing and multipath effects do not permit the use of GPS during the last few meters of the approach.[58] It measures both relative range and relative attitude, because strong coupling exists between these states during the last few meters and these states must be

controlled.[54] Two star trackers are provided for precise updates to the attitude derived from the IMU's. Two Earth sensors and two coarse Sun sensors are provided for coarse attitude updates to this same information.[57] The rendezvous sensor is mounted on the forward section of the ATV. It emits a laser beam with a 905 nanometer wavelength. This beam is reflected by six retroreflectors mounted near the docking port of the Russian Service Module that is attached to the ISS. The reflected beam is detected by the rendezvous sensor on the ATV and processed to provide relative range, relative-range rate, and bearing for the last 200-to-100 meters and relative attitude and relative-attitude rate for approximately the last 40 meters.[59]

Because relative GPS and the rendezvous sensor are critical to successful ATV AR&D and both are new technologies with significant unknowns, three flight experiments were flown in space to test them.[59] A relative-GPS experiment was flown on the Space Shuttle STS-80 mission in November-December 1996. Here, the German National Space Agency's (DARA's) Orfeus-Spas satellite was deployed from the Orbiter payload bay with the RMS. It had a GPS receiver and target retroreflectors mounted on it. A second GPS receiver and a JSC TCS were mounted on the Orbiter. GPS data for each spacecraft was recorded separately and correlated postflight to generate relative-GPS measurements. This data was then compared with recorded data from the TCS, which acted as a truth sensor for the relative-GPS data.[60]

Next, a relative-GPS and rendezvous sensor experiment was flown on the Space Shuttle STS-84 mission in May 1997. Here, the Orbiter rendezvous and docks with the Russian space station Mir. Mounted on the Mir were a GPS receiver and target retroreflectors for both the TCS and the ESA rendezvous sensor. Mounted on the Orbiter were a GPS receiver, the TCS, and the ESA rendezvous sensor. Relative-GPS data was generated like on STS-80. It and recorded measurements from the rendezvous sensor were compared with recorded measurements from the TCS, which again acted as a truth sensor. A third flight experiment was flown on the Space Shuttle STS-86 mission in September 1997. It was essentially a reflight of the one on STS-84. All three flight experiments did experience some problems. The results from all three are still being analyzed.[60] The total cost of these three flight experiments, several preflight ground simulations, and postflight analysis of the flight data was $43M, not counting flight experiment launch costs.[61]

Japan has made a big commitment to the development of automated and remotely-controlled systems for rendezvous and dock, capture, and berth. As stated by Yamagata, a NASDA project manager in this technology area: "unmanned rendezvous systems are very important for the 21st century for NASDA and the world because of the cost savings it will give us."[62] NASDA considers capabilities in unmanned docking, capture and berthing, and robotics as essential for their plan to conduct unmanned servicing of future spacecraft, especially the Japanese Experiment Module (JEM) of the ISS. They plan to deliver supplies to the JEM with their H-2 Orbiting PlanE (HOPE), which is an unmanned miniaturized version of the U.S. Space Shuttle Orbiter.[63] They also plan to resupply the JEM with their unmanned H-2 Transfer Vehicle (HTV), which is a 13-metric-ton resupply vehicle that is similar to the Russian Progress vehicle.[64] Both are scheduled to make test flights in the year 2001.[62, 65]

NASDA also intends to use the HOPE with an RMS "to refuel space platforms, change out experiment modules, and perform repairs."[62] A proposed Japanese Orbital Servicing Vehicle (OSV) has similar, but even more ambitious, goals. "The initial OSV will be operated based on the Space Station. The major missions of the OSV are assumed to be: (1) Deployment and retrieval of unmanned co-orbiting platform; (2) Changeout payloads on platform; (3) Exchange of failed equipments of platform; (4) Resupply of

consumable to platform; and (5) Supply of materials to and retrieval of products from mission payloads. To perform above missions accurately, the initial OSV has a capability of automatic maneuver including automatic rendezvous and docking. It has also remote manipulator system. These are considered as key technologies of the OSV. The future upgraded OSV should have more autonomous ability, which will be helpful for more complicated missions such as: (1) Retrieval of non-cooperative objects, and (2) On-orbit construction or refurbishment of spacecraft. New advanced technologies such as robotics and artificial intelligence will be incorporated in the upgraded OSV."[66]

A mission profile for the HTV to deliver payloads to the ISS is described by Yamanaka in reference 64 and is as follows. The HTV is being designed to deliver 6-ton payloads to the ISS. It will be launched by the H-IIA rocket from Tanegashima Space Center. After separation, the HTV autonomously executes a rendezvous sequence which consists of phase, height, and plane adjustment maneuvers. Eventually, it reaches the ISS and enters a berthing box. Then, all HTV thrusters are inhibited. Next, the ISS RMS grapples the HTV and berths it to the ISS. Reference 62 describes a slightly different scenario for the terminal phase of rendezvous. It indicates that the HTV is remotely docked to the ISS, entirely by Ground control. Whichever method is eventually employed, once the HTV is attached to the ISS, its payloads will be transferred to the ISS and disposables from the ISS will be transferred to it. Then, the HTV will perform automatic departure from the ISS and destructive reentry into the Earth's atmosphere.

For Yamanaka's scenario, the HTV GN&C system employs GPS receivers for relative and absolute GPS, rendezvous laser radar, Inertial Reference Units (IRUs), accelerometers, and Earth sensor assemblies.[64] There is a GN&C computer as well as an abort control unit for aborting rendezvous in case of an emergency. Absolute and relative GPS is used for navigation down to 500 meters from the ISS. After that, the rendezvous laser radar is utilized.

To verify the rendezvous and robotic technologies required by the HTV, the HOPE, and advanced vehicles like the OSV, NADSA began a $260M project in 1990 called Engineering Test Satellite-VII (ETS-VII).[62] The ETS-VII spacecraft consists of a chase vehicle and a target vehicle that are launched together on an H-II launch vehicle into a 550 kilometer circular Earth orbit. Launch occurred on November 28, 1997. NASDA has scheduled a series of seven tests for the ETS-VII during an 18-month period that was to begin in February 1998. The basic goal is to demonstrate Ground-controlled docking maneuvers of unmanned vehicles using a combination of GPS navigation and radar. However, the tests will also include simulated equipment and component changeout using an RMS on the chase vehicle that is controlled by the Ground.

A typical scenario for the rendezvous-and-docking tests is as follows. Upon orbit insertion, the chase vehicle separates from the target vehicle and backs off to a maximum distance of 10 kilometers from the target vehicle. It then automatically approaches the target vehicle using relative GPS and Clohessy-Wiltshire guidance.[64] Relative range is determined to an accuracy of 20 meters. At a distance of 500 meters from the target vehicle, navigation is switched from relative-GPS to rendezvous laser radar. Relative range and bearing are determined to an accuracy of 0.1 meters and 0.05 degrees, respectively. This is used for the approach until the chase vehicle is 2 meters from the target vehicle. At this point, a proximity camera sensor is used to determine relative position and attitude by measuring a two-dimensional Charge Coupled Device (CCD) image of a three-dimensional marker on the target vehicle.[64] This sensor measures relative range to 2 centimeters or better in each axis and relative attitude to 0.05 degree or better in each axis. Rate gyros and an Earth sensor are available for measuring chase vehicle angular velocity and attitude, respectively, throughout the whole process.

Since the ETS-VII mission began, it has been plagued with problems. “Shortly after launch, the automatic Sun tracking function on its solar panel failed; engineers attributed the loss to a software problem that was fixed.”[67] Then a companion satellite, the Communications and Broadcasting Engineering Test Satellite (COMETS), was launched into a nearly-useless orbit on February 21, 1998.[68] COMETS has the task of relaying commands to the spacecraft from Ground controllers for the rendezvous, docking, and robotic tests. NASDA is trying to salvage some use of the satellite through a series of orbit adjustment maneuvers that are scheduled for May 1998. As a backup, NASDA can use the U.S. Tracking and Data Relay Satellite System (TDRSS).[69] There has been a problem with the high gain antenna in the communication system. Also, noise spikes in the sensor path for attitude control caused a loss of attitude. Subsequently, attitude was regained and this problem was fixed.[70]

The Charles Stark Draper Laboratory in Cambridge, MA has been involved in the ETS-VII program. It was under contract to Mitsubishi Electric Company to verify, prior to launch, the relative-GPS system in the ETS-VII. This was done in a H/W-S/W simulation lab that included GPS hardware and the software algorithms for the relative-GPS navigation filter.[70]

V. PROPOSED AUTOMATED RENDEZVOUS AND CAPTURE SYSTEMS FOR MEETING FUTURE NEEDS

Section III of this paper identified the need for AR&C in the U.S. space program. Section IV reviewed today's technology and ongoing technology efforts related to AR&C. This section proposes systems that satisfy the U.S. need for AR&C and utilize, where possible, today's AR&C-related technology. The focus is on systems for AR&C with cooperative target vehicles, since this is the near-term need and logically precedes the development of AR&C with noncooperative target vehicles. Two systems are proposed.

One is a system designed for operation in LEO where GPS can be utilized for navigation. This limits its use to altitudes of around 15,000 kilometers and below. Use of GPS above this altitude becomes more complicated and performance degrades. This is because the GPS satellites are at an altitude of around 20,000 kilometers and GPS was originally designed for navigation well below this. So, this system uses GPS/INS for absolute and relative navigation. A good choice for a GPS/INS system is the SIGI that is being developed for applications like the Space Shuttle, the ISS, and the CRV.[46, 47] It generates position, linear velocity, inertial attitude, and angular velocity with absolute GPS. These are used to get the chase vehicle to within about 7 kilometers of the target vehicle. At this point, relative GPS is employed to generate relative range, bearing, relative-range rate, relative attitude, and relative angular velocity. These are used to get the chase vehicle to within about 100 meters of the target vehicle. The precise relative-GPS algorithms being developed by Mayflower Communications with support from MSFC engineers are very effective here.[41] Close in GPS has problems with shadowing and multipath; hence, an optical sensor is needed for the terminal phase of rendezvous. Because of the coupling between relative position and relative attitude and the need to control these states close in, the optical sensor should generate both relative position and relative attitude. Tietz and Kelly state this another way.[71] "A system that measures only the distance and direction to the target is adequate to approach within eight meters of the target. At this point, attitude information becomes vital because offsets among the docking aid, target docking fixture, and target center of mass become major contributors to alignment errors. The offsets among the camera, chase vehicle center of mass, and chase vehicle docking fixture make attitude information doubly important because chase vehicle attitude and position must be controlled. To further complicate the problem, the target may be coning and nutating, making it difficult to anticipate attitude changes." The best choice for the optical sensor is the VGS, since it measures both relative position and relative attitude.[32] For LEO R&C applications like delivering unmanned reusable launch vehicles to the ISS and autonomously assembling vehicles for a manned mission to Mars, VGS power and mass are not critical parameters that need to be optimized. Also, for these applications, simplifying the target by avoiding the need to deliver power to it is highly desirable. This leads to the use of a passive target with corner-cube retroreflectors. The GPS/VGS system just described satisfies the need for AR&C to autonomously deliver unmanned reusable launch vehicles to the ISS for ISS resupply, deliver the CRV autonomously to the ISS, and allow unmanned vehicles to be autonomously assembled in LEO for a subsequent manned excursion to Mars. It would also satisfy the need for AR&C in LEO in order to accomplish satellite servicing missions with cooperative targets. It should satisfy the need for AR&C in assembling large power-generating systems in Earth orbit.

The second AR&C system that is proposed is one that is designed to operate where GPS cannot be used for navigation, as in Mars orbit, lunar orbit, or Earth orbit above 15,000 kilometers altitude. This system has IMUs and star trackers for inertial navigation and attitude determination, respectively. It uses JPL's AFF sensor to estimate the range and attitude of the chase vehicle relative to the target vehicle from 1300 kilometers down to 10 meters separation.[48, 49] Ground tracking should very easily be able to get the chase vehicle to within 1300 kilometers of the target vehicle.[72] JSC's TCS or the SRI sensor being developed by JSC and the Sandia National Laboratories are possible alternatives to the AFF sensor.[42, 44] At 10-meters separation and closer, the VGS is used for relative position and relative attitude. Because VGS power and mass are critical parameters in this application, an active target with laser diodes is needed. This eliminates the corner-cube retroreflectors on the target and the laser diodes on the VGS sensor head assembly. Micro-miniaturization of the electronics is imperative. With these changes, an order-of-magnitude reduction in power and mass is conceivable. For example, the VGS that was flown on STS-87 dissipated 65 watts nominally.[73] The sensor head assembly, including electronics and cables, had about 40 lbs mass; the target had about 25 lbs mass. With an active target and micro-miniaturized electronics, these numbers can potentially be reduced by a factor of five to ten. The AFF/VGS system just described can satisfy the need for AR&C in Mars orbit for the unmanned and manned Mars missions. It can also satisfy any future need for AR&C in lunar orbit or Geosynchronous Earth Orbit (GEO), should the need arise.

VI. A TECHNOLOGY PLAN FOR AUTOMATED RENDEZVOUS AND CAPTURE

The systems described in section V should satisfy all of NASA's projected needs for AR&C with a cooperative target vehicle. Eventually, NASA can use, and the USAF will need, a capability in AR&C with a noncooperative target vehicle for servicing and retrieving disabled satellites. The USAF will also want the capability of AR&C with an uncooperative target vehicle for defense reasons. It seems unlikely, though, that NASA could utilize this capability. Hence, a cost-effective approach to developing a complete AR&C capability in the U.S. would be for: NASA to lead the development of it with a cooperative target vehicle; NASA and the USAF to collaborate on the development of it with a noncooperative target vehicle; and the USAF to undertake its development with an uncooperative target vehicle. A proposed technology roadmap for this approach is presented in figure 9. The development of AR&C with an uncooperative target vehicle is not included, because NASA will not be involved in this effort. The development of AR&C in LEO with a cooperative target vehicle and a passive target is shown concurrently in time with the development of AR&C outside LEO with a cooperative target vehicle and an active target. Both are shown to begin in the fourth quarter of 1998. This is unlikely to happen because of funding constraints, so one or the other will in all likelihood slide to the right of the chart with time. Hence, the system with the more pressing need will be developed first and the other will benefit from it. Note that separate AR&C closed-loop flight experiments are proposed for testing the two systems described in section V. It is unlikely that one flight experiment could be used to test both systems, because of their uniqueness. Also, the complete systems need to be verified, not just the components in them. There are several candidate approaches to a closed-loop flight experiment for either system. These will be discussed in the remainder of this section. Detailed program plans for these are presented in appendices B through D for the system in LEO with a cooperative target vehicle and a passive target. Plans for the other system should be similar, with similar schedules and cost numbers.

The first approach is considered the most attractive at this point. It uses surplus and expendable Manned Maneuvering Unit (MMU) hardware. The MMU is a proven free-flying platform that can operate in either a pilot-monitored or unmanned mode. The recommendation here is to fly it in an unmanned mode. "There is considerable flight experience with the MMUs. In February 1984, two MMUs were used on Challenger (STS 41-b). Astronauts performed translations of 150 and 300 feet to and from the Orbiter. With a Trunnion Pin Attachment Device (TPAD) connected to the MMU control arms, docking exercises were performed on the SESA and SPAS pallets. Another Challenger mission (STS 41-c) carried two MMUs in April 1984. During EVA, an astronaut attempted to capture a Solar MAX Satellite that was rotating and out of control. Unfortunately, the TPAD could not achieve a hard dock with the trunnion pin. Discovery (STS 51-A) carried the MMUs up to space again in November 1984. Using the MMU, an astronaut rendezvoused with PALAPA B-2. This time, the TPAD affected a hard dock. The astronaut stabilized the satellite using the MMU's Automatic Attitude Hold (AAH). A WESTAR VI was captured two days later, using the same procedure."[74] A detailed program plan for this approach is presented in appendix B.

The second approach to an AR&C closed-loop flight experiment in LEO with a cooperative target vehicle and a passive target uses two Spartan spacecrafts. A plan for this approach is presented in appendix C. Further investigation into this approach calls for reviewing the Spartan cost figures.

The impact of two Spartans on one Space Shuttle flight needs to be assessed with regards to Orbiter center-of-gravity constraints and any manifest issues, since two Spartans would take up about one fourth of the Orbiter's payload bay.

The third approach to an AR&C closed-loop flight experiment in LEO with a cooperative target vehicle and a passive target uses one Spartan spacecraft and a USAF micro-satellite. See section IV on the XSS-10, XSS-11, and XSS-12 missions. XSS-11, projected for flight in 2001, could be an excellent experiment platform for this AR&C flight experiment. Besides, NASA and the USAF are looking for opportunities like this for collaboration in space.[75] Some preliminary cost estimates for this approach are shown in appendix D. These do not include the cost to incorporate the VGS into the micro-satellite design. The cost for the micro-satellite is approximately $5.5M and the cost to refly the Spartan is approximately $2.5M. The cost for the micro-satellite contractor to incorporate the VGS design into the micro-satellite could run anywhere from $0.5M to $1.5M. Hence, the total cost for this approach is in the neighborhood of $9M, considerably more than the other two. However, this approach still has some attractive features.

Another approach that is worth mentioning is to use the Japanese Space Flyer Unit (SFU) as a mothership and JSC's AERCam as the daughtership, much like the Spartan and the USAF micro-satellite.[43, 76, 77] NASDA is interested in using their SFU in cooperative efforts with NASA and the SFU should be quite suitable for this application. However, the AERCam is very small and requires significant modifications in order to use it as a daughtership here.[78] Hence, another daughtership would need to be found.

Of the candidate approaches to an AR&C closed-loop flight experiment that have been discussed, the one that uses surplus MMU hardware is considered the leading candidate at this point. It takes about three years and $6M to complete.

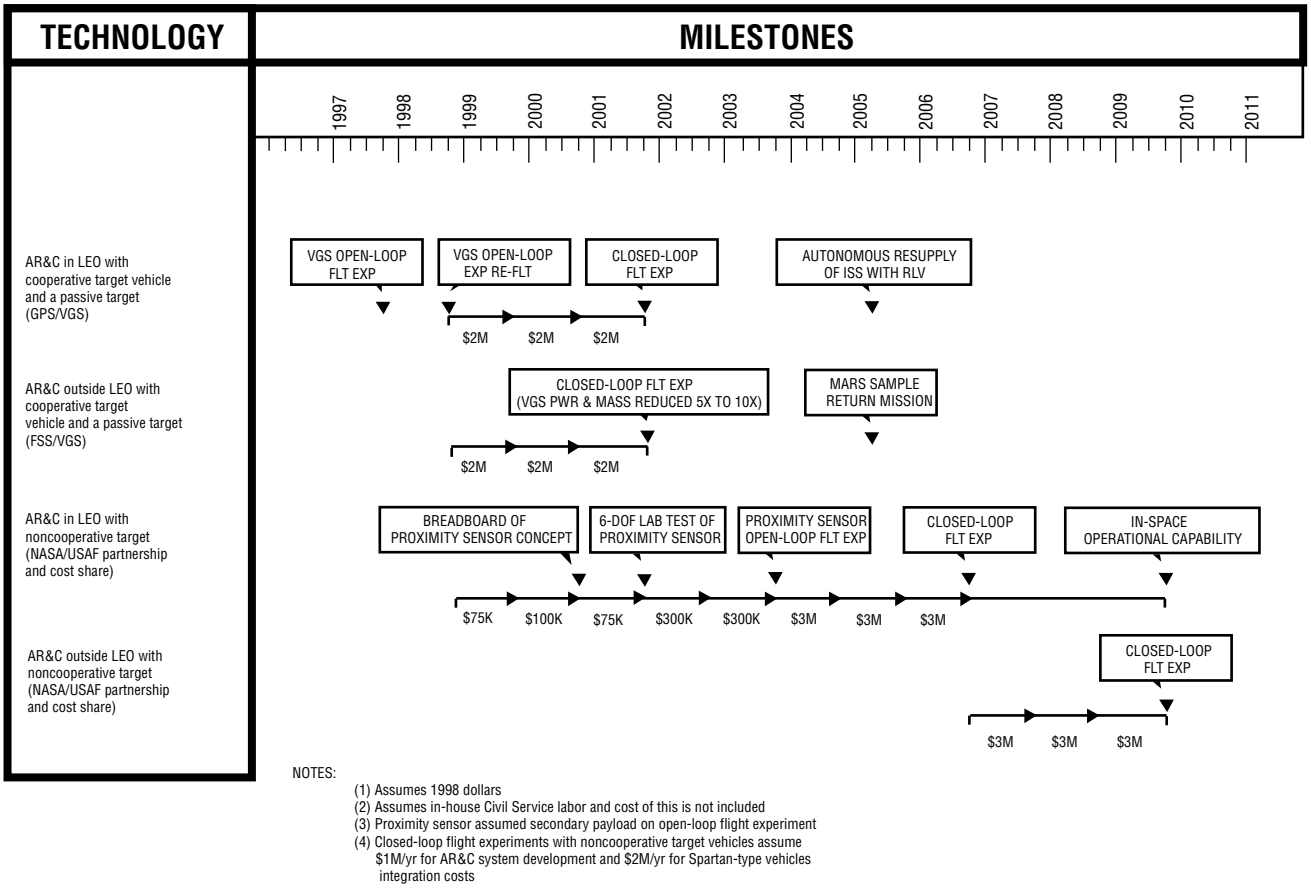

Figure 9. Proposed technology roadmap for automated rendezvous and capture.

VII. FINAL COMMENTS

This paper has presented the results of an assessment into the technology of AR&C in space. The conclusion is that new AR&C technology is needed for NASA to execute some future missions that are on the horizon. Two new AR&C systems need to be developed. One is a system for AR&C in LEO with a cooperative target vehicle and a passive target. This is needed to autonomously deliver NASA's future RLV to the ISS. It is also needed for autonomously assembling unmanned vehicles in LEO in order to execute a manned mission to Mars. It can be used to autonomously deliver the CRV to the ISS. It can also be used for autonomously and cheaply assembling large power-generating systems in Earth orbit, one piece at a time. This system uses the Honeywell SIGI GPS/INS that is being developed under contract to JSC for absolute and relative navigation during the phasing and proximity-operations segments of rendezvous. It uses MSFC's VGS with a passive target for the terminal phase. A closed-loop flight experiment to test this system in space using surplus MMU hardware takes about three years and $6M to complete.

Another new AR&C system needs to be developed for AR&C in Mars orbit in order to execute the return leg of an unmanned Mars sample-return mission or a manned mission to Mars. Once developed, this system can also be used for AR&C in lunar orbit or GEO. This system has IMUs and star trackers for inertial navigation and attitude determination, respectively. It uses JPL's AFF sensor for navigation during the phasing and proximity-operations segments of rendezvous. It too uses the VGS with an active target and micro-miniaturized electronics for the terminal phase. A closed-loop flight experiment to test this system using surplus MMU hardware also takes about three years and $6M to complete.

Eventually, NASA can use, and the USAF needs, the capability for AR&C with a noncooperative target vehicle both in LEO where GPS can be used and outside LEO where it cannot. This is for servicing and retrieving disabled satellites. NASA and the USAF should form a partnership to develop this technology and share the cost. A development program that parallels the one for AR&C with a cooperative target should take about eleven years and $19M to complete. NASA and the USAF could share the cost of this.

APPENDIX A—VGS WITH AN ACTIVE TARGET BASELINED FOR THE MARS SAMPLE RETURN MISSIONS

Mark Adler,10/4/97 12:37 AM,MSFC AR&C

Mime-Version: 1.0 (NeXT Mail 3.3 v1 18.2) X-lmage-Url: http://quest.jpl.nasa.gov/mark-face.gif X-Nextstep-Mailer: Mail 3.3 (Enhance 1.3) From: Mark Adler <Mark.Adler@quest.jpl.nasa.gov> Date: Fri, 3 Oct 97 21:37:14 -0700 To: mpolites@hq.nasa.gov (Michael Polites) Subject: MSFC AR&C Cc: Everett.Beam@msfc.nasa.gov

Mike,

I met with Gene Beam and friends from MSFC on September 10th to discuss possible applications of their AR&C technology to Mars Sample Return. We concluded that their optical target scheme modified to use a solid-state light source through fiber optics on the target (instead of optoreflectors) would be a very good fit to Mars Sample Return. The MSFC scheme is now our primary candidate for a docking-phase sensor. We also discussed the possibility of a flight test using two spacecraft before 2001 to validate the technology. Gene mentioned a possible two-Spartan spacecraft flight that could be used. I would like to see such a flight test funded, provided that it could address the systems most likely to be used on Mars Sample Return. Please let me know the best way to advocate such a flight test. Thanks.

Mark Adler
Mars Exploration Program Architect

APPENDIX B—AUTOMATED RENDEZVOUS AND CAPTURE FLIGHT EXPERIMENT UTILIZING A MANNED MANEUVERING UNIT

FEB 05, 1998

Prepared for Submission to the MSFC ASTP/AR&C Program
By Astrionics Laboratory, Orbital Systems and Robotics Team
Preliminary Cost Estimate—Under $10 Million Total
Schedule—36 months from ATP

Abstract: A NASA flight demonstration of the critical systems and technologies for accomplishing Automated Rendezvous and Capture (AR&C) of ASTP vehicles in Earth orbit:

- Demonstrates the design and operation of the MSFC AR&C system in the relevant environment of space. The system consists of the Global Positioning System (GPS) Relative Navigation Software, Video Guidance Sensor (VGS), and Automated Guidance, Navigation & Control software.
- Demonstrates fully Automated Guidance, Navigation and Control
- Demonstrates relative GPS navigation technology
- Demonstrates the capability of AR&C to accomplish “soft docking”
- Demonstrates the transition from GPS to VGS navigation
- Obtains “truth” data for validation of ground simulations
- No NASA alternative capability is planned.

B.1 Technical Approach

B.1.1 Problem

The United States does not utilize an automated docking capability and is reliant on manned control for rendezvous and docking of orbiting spacecraft. This reliance on the labor intensive manned interface for control of rendezvous and docking vehicles will have a significant impact on the cost of the operation of the International Space Station (ISS) and precludes the use of any U.S. unmanned launch capabilities. The Soviets have the capability to autonomously dock in space, but their system produces a hard docking with excessive force and contact velocity. The Europeans and Japanese are aggressively developing an automated docking capability for both commercial utilization and the possible re-supply of the ISS. The ability to autonomously rendezvous and dock will revolutionize the commercial space industry. The United States has lost its competitive edge since the 1980’s in the expendable launch vehicle market and will continue to endure a shrinking share of this multi-billion dollar market if the key technologies such as AR&C are not developed in the near future. Automated Rendezvous and Capture has been identified as a enabling technology for the Reusable Launch Vehicle (RLV) Program. AR&C has also been identified as a category of interest by Code M, Focused Call for Flight Demonstrations. The development and

implementation of AR&C capabilities can significantly enhance the flexibility and lower the cost of maintaining the International Space Station.

MSFC has designed and developed a AR&C system and demonstrated the capability in a real time closed loop simulation environment. At the conclusion of the AR&C Ground Test Program in 1998, the system will have been tested to the limits of the simulation environment and requires a flight demonstration to validate the hardware and ground test facilities. The flight demonstration would:

- Demonstrate the design and operation of the MSFC AR&C system in the relevant environment of space. The system consists of the Global Positioning System (GPS) Relative Navigation Software, Video Guidance Sensor (VGS), and Automated Guidance, Navigation & Control software.
- Demonstrate fully Automated Guidance, Navigation and Control
- Demonstrate relative GPS navigation technology
- Demonstrate the capability of AR&C to accomplish “soft docking”
- Demonstrate the transition from GPS to VGS navigation
- Obtain “truth” data for validation of ground simulations

B.1.2 Ongoing Activities

The proposed flight is a logical progression of the currently institutional funded AR&C Ground Test Program and the AR&C Video Guidance Sensor (VGS) flight experiment that was flown on the STS-87 SPARTAN mission. The technologies demonstrated in the proposed flight experiment have matured to the level that continued development clearly indicates the need for a flight experiment and leverages the work completed under existing programs. Continued refinement of both the sensor technology and simulation capability without a flight validation of the total system could significantly increase level of risk and cost of future AR&C systems. The Ground Test Program has developed the only facility in the world capable of producing six degree of freedom, hardware in the loop, real-time simulation capability for testing sensors and relative GPS hardware and software. This flight experiment would validate the simulation capabilities of the hardware, software and facilities.

The Flight Robotics Laboratory (FRL) facility has been declared as a “one of a kind” world class test facility by the National Facility Review Team commissioned by Vice President Al Gore as part of the Re-inventing Government objective.

The track record of the principle investigators includes a history of innovative research producing U.S. Patent awards, successful program management, and Small Business Innovative Research Awards (SBIR).

B.1.3 OSF Flight System Objectives

Automated Rendezvous and Capture (AR&C) provides a system that requires little or no ground support and is capable of automated operations with onboard sensors and navigation providing the intelligence to complete docking maneuvers. The concept for AR&C operations is shown in Figure 10. As such, its capabilities are directly relevant to Human Exploration and Development of Space (HEDS)

program objectives as identified in the four major categories of interest. AR&C technologies directly support Automated Rendezvous and Docking and provide automated GN&C and sensor technologies to support Telerobotics, Autonomous Systems Development and Autonomous Terminal Landing. AR&C provides Space Operations enhancements by reducing crew time and enhancing Flight Control Team operations support efficiency. ISS is enhanced by the additional logistics capability and backup provided by automated, unmanned launch vehicles. The requirement for Space Shuttle resupply of ISS would also be reduced. And, of course, Advanced Space Transportation Systems directly benefit from the reduced requirements for manned control and the development of validated ground facilities for future system development.

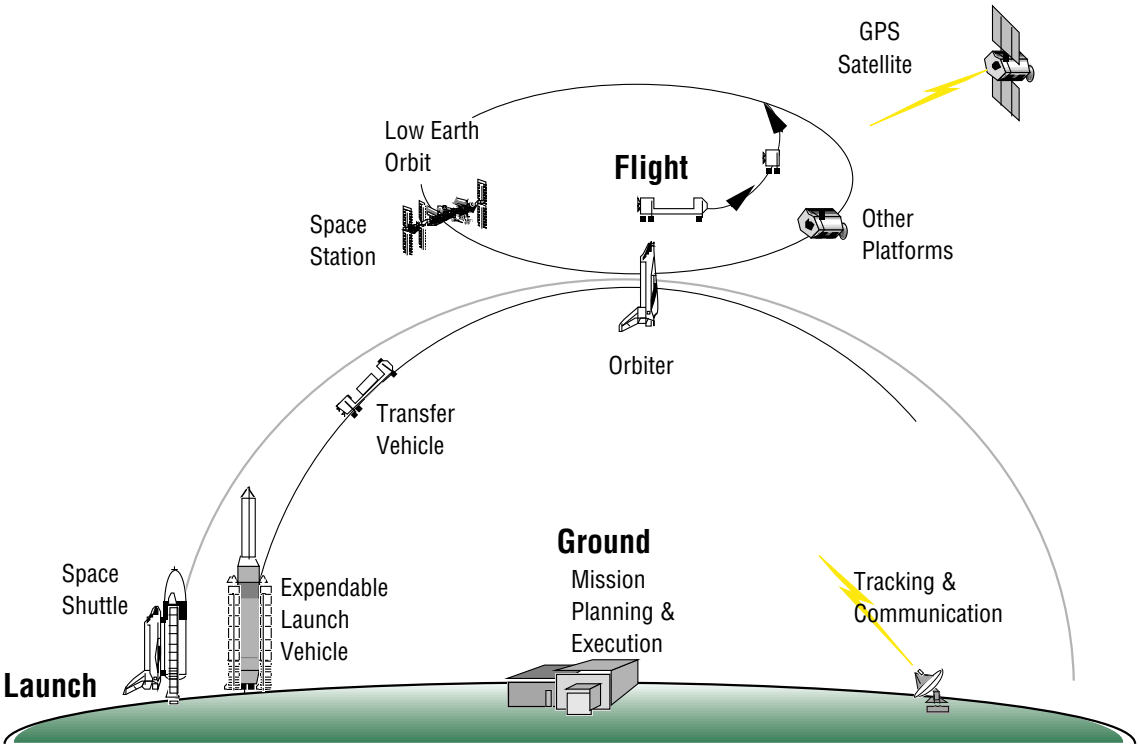

Figure 10. AR&C operations concept.

B.1.4 Demonstration Importance

The AR&C flight demonstration will complete the development of an enabling technology that will provide an alternate, unmanned capability to support ISS and other space platforms, provide a contingency capability for space rescue, i.e., Skylab reboost. The demonstration will enhance the credibility of the ground-based program and future simulations. The flight demonstration will increase the readiness level of a technology that is not currently available in NASA. The AR&C technology has been judged an enabling technology for the Reusable Launch Vehicle program and is currently being evaluated for applications on the X-33 program. The AR&C flight demonstration is important because it demonstrates a system for reducing future operations and development costs for projects that implement Automated Rendezvous and Capture. AR&C is directly applicable to the Space Shuttle operations and has the potential to significantly reduce operations cost.

B.1.5 Method of Approach

From inception, the AR&C program has strived to develop technologies that would have a broad application to future spacecraft systems. The requirements for AR&C were selected to ensure the development of a system that could be used by many types of spacecraft. AR&C evaluated and defined a set of operational concepts, subsystem requirements and specifications, and system designs that were based on broad analytical studies of available U.S., and planned and foreign flight systems.

The flight demonstration of AR&C utilizes a Manned Maneuvering Unit (MMU) as the deployed Chase vehicle. The MMU mounts an AR&C package that houses the hardware and software needed to control the MMU for the AR&C mission (Figure 11). The MMU is modified to accept the automated control inputs from the AR&C package as described in MSFC-RQMT-2371, *AR&C System Requirement Document* and ICD-3-60053, *AR&C Interface Definition Document.*

The MMU/AR&C is launched on a pallet in the Orbiter payload bay. The package is checked out in the payload bay via data lines prior to deployment. The RMS deploys the checked out MMU/AR&C package (Figure 12). After deployment, MMU/AR&C stabilizes and obtains sensor (VGS) lock on a docking target fixed to the end of the deployable MAST (Figure 13). The Orbiter then moves away until the VGS loses lock. The Orbiter continues to move away to 1000 meters. At a command from the Orbiter crew, the MMU/AR&C begins to approach the docking target on the MAST. The maximum range of the VGS (including target acquisition and loss) and GPS to VGS transition at 100 meters is demonstrated during these approach maneuvers.

At 10 meters from the target, the MMU/AR&C holds and then continues to docking. A back-away maneuver is demonstrated to simulate a waveoff or a collision avoidance maneuver. The approach maneuvers are repeated with different start points and lighting conditions.

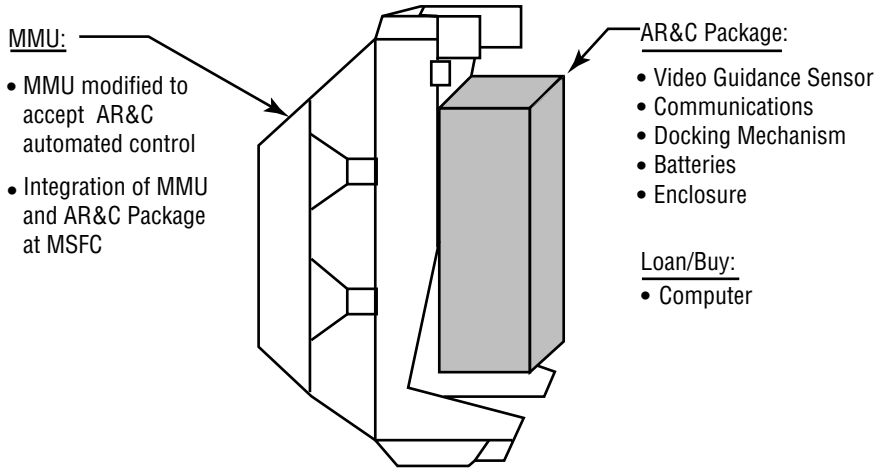

Figure 11. MMU/AR&C flight configuration.

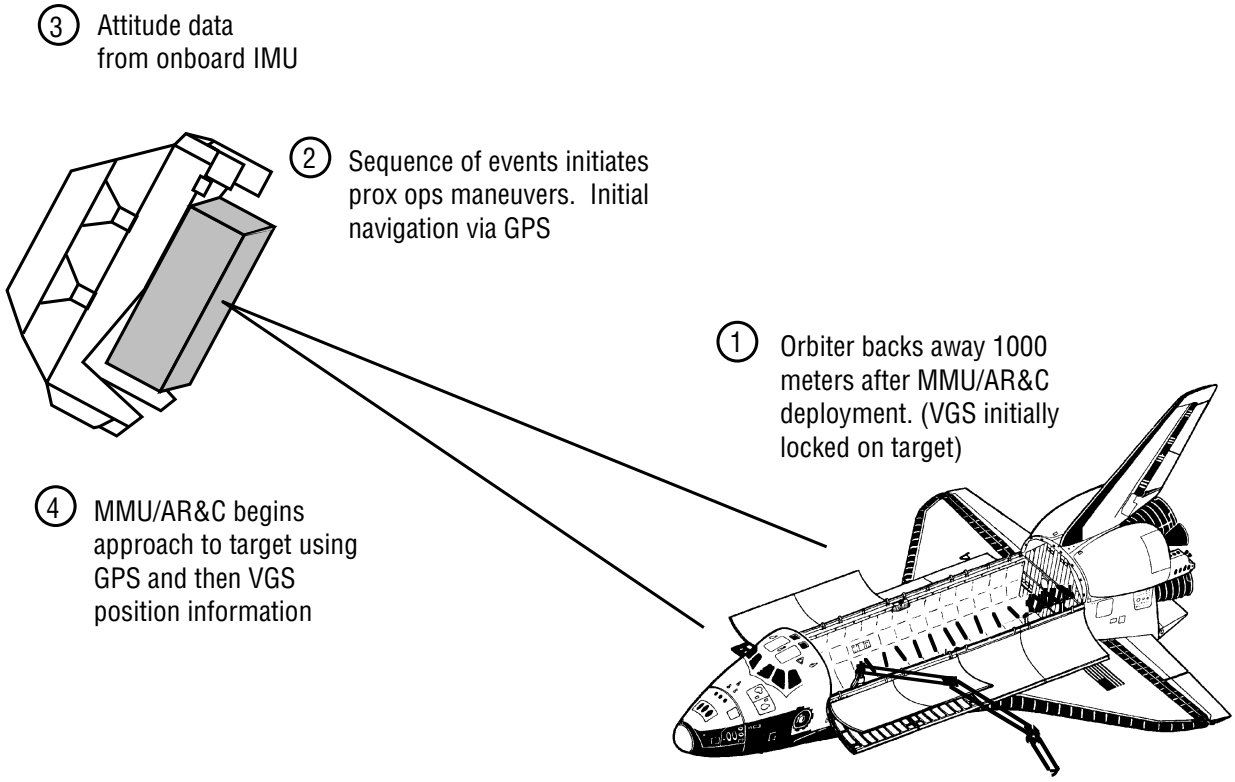

Figure 12. AR&C mission description.

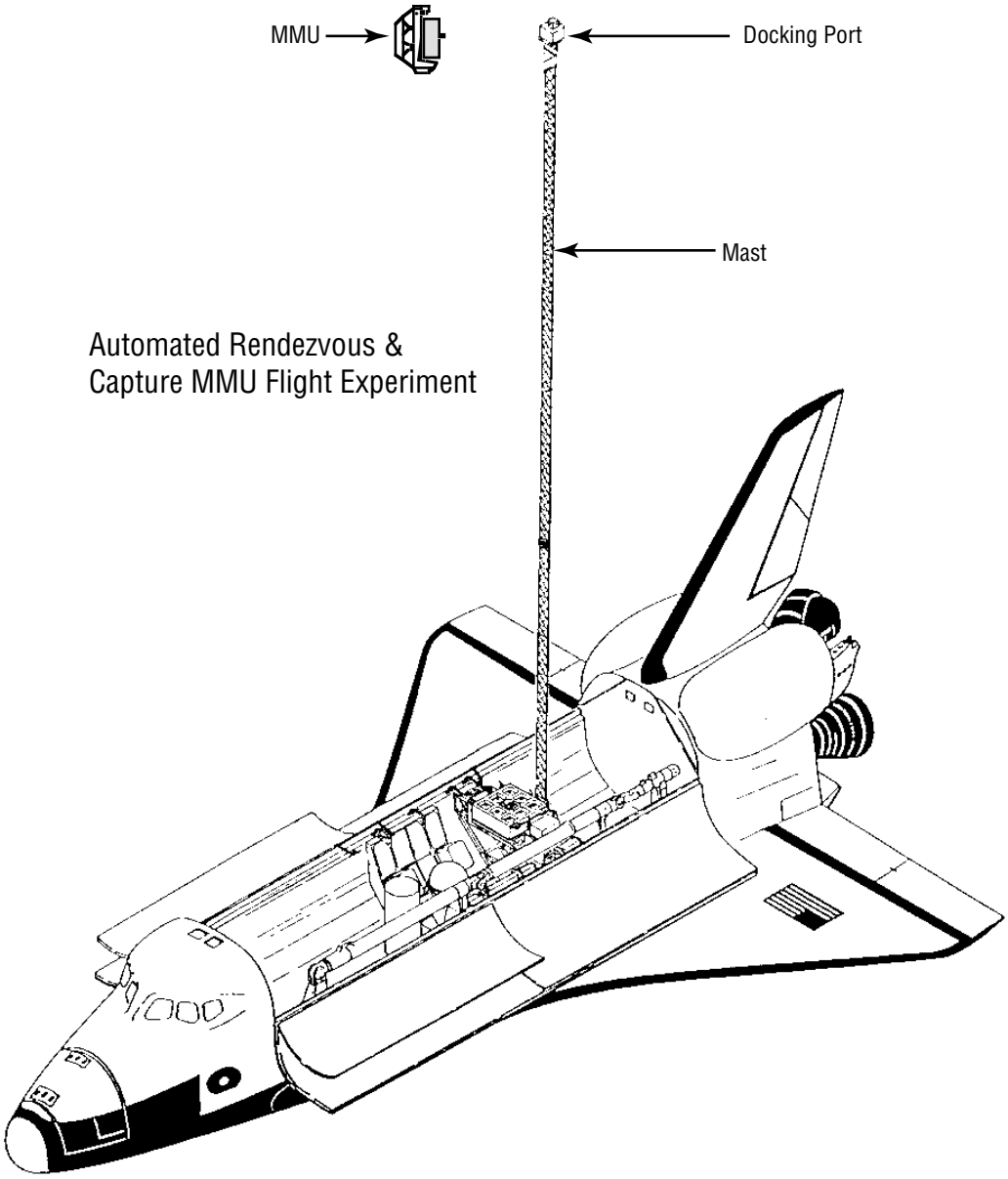

Figure 13. AR&C/MMU flight experiement.

B.1.5.1 Automated Guidance Navigation and Control. The AR&C Ground Test Program has developed GN&C software that is designed to fly an automated spacecraft from booster separation to final dock with the target spacecraft. The GN&C software contains advanced targeting and relative GPS navigation and attitude determination algorithms that support efficient orbital operations and consumable management. This software has successfully completed initial testing and currently is being prepared for final AR&C systems test. Detailed technical papers describing the guidance schemes and overall implementation, and a *AR&C OBC Software Requirements Specification* (MSFC-SPEC-2441) are available through the AR&C Project Office.

B.1.5.2 Close Range Sensor. A video-based proximity guidance sensor was selected after reviewing existing commercial sensors and proximity sensors planned by Europe and Japan. The AR&C Video Guidance Sensor (VGS) was designed to provide a "soft dock" capability to reduce impact loads on the International Space Station (ISS), a capability unavailable in present unmanned docking systems. The sensor can meet the requirements for all known docking mechanisms. The VGS has been successfully demonstrated in a six degree of freedom, closed-loop simulation environment including solar effects. The sensor was successfully tested in a open-loop flight test on the STS-87/SPARTAN mission. The sensor design requirements and capabilities are available in the *VGS Contract End Item (CEI) Specification*, MSFC-SPEC-2614.

B.1.5.3 GPS Navigation. The AR&C Global Positioning System (GPS) receivers were designed to provide relative navigation between two orbiting spacecraft. The term "*Relative GPS*" differs from absolute or differential GPS in that both the target and chase vehicles are both moving relative to any fixed reference frame. Therefore, while the exact locations are only determined to the accuracy of the GPS system (i.e. ±100m), the relative distances between the spacecraft are known to within one meter (1 Sigma). This type of accuracy is required to enable the transition between the GPS and the close range sensor. In differential GPS, the target is at a known, fixed location. This methodology is of no use for space based systems where the spacecraft's are performing thrusting maneuvers to achieve rendezvous. Differential GPS techniques are good for, and have been utilized in the autolanding of commercial sized aircraft.

Extremely limited orbital data has been acquired using a simplified first generation relative GPS techniques. While these filters performed as designed, the accuracy of the relative locations was no better than the absolute GPS solution of 200 meters. Since the initial data, a multiyear development of a high fidelity relative GPS filter has been completed and tested utilizing state of the art GPS radio frequency (RF) signal simulators. The GPS RF simulators produced a false GPS constellation signals as if the receivers were traveling through space at orbital velocities. This is the first proposed flight test utilizing the state of the art relative GPS navigation filter design. Technical data for the relative navigation filter is available in the form of Relative GPS Navigation Statement of Work (SOW), AIAA technical papers and presentations, and Final GPS Navigation Filter Test Results that will be released at the conclusion of the final filter test.

B.1.5.4 Facilities. An objective of the AR&C program is to develop and validate ground facilities that will support the evaluation of AR&C systems for future spacecraft, and reduce the cost and technical risk for projects that implement automated rendezvous and docking. The MSFC Flight Robotics Laboratory was developed to fulfill this requirement. This unique facility has the capability to evaluate avionics, software, and hardware in closed loop simulations that re-creates the dynamic and lighting conditions for two spacecraft docking in orbit. A detailed facility description may be found in the *MSFC Flight Robotics Laboratory*

Description document and the *FRL Users Manual* (volumes 1, 2, and 3) from the AR&C Project Office.

B.1.6 Implementation of Flight Test Results

In addition to being a key category of interest in the call for proposals, the ability to perform autonomous rendezvous and dock is required in nearly every aspect of the long-term goals of the HEDS Mission and Strategic Plan. The demonstration supports the HEDS mandate for improving greater U.S. Competitiveness. The demonstration also supports the HEDS goal of achieving routine Space travel (HEDS Goal #3) by developing advance space transportation capabilities to enable exploration goals (Objective #3). The flight meets the four major objectives of the flight demonstration program:

- Matures high leverage technologies
- Selectively addresses a key operational capabilities
- Brings technological advancements to fruition through space-based demonstration
- Provides hands-on experience for young NASA engineers and managers.

In the short term,

- The flight supports AR&C readiness for potential ISS application, support to RLV development, and support/independent evaluation (ESA/ATV, RSA).

- The flight data will demonstrate the navigation control theory and logic developed for Automated Guidance Navigation and Control and will provide the basis for the development of a fully redundant control scheme for manned rated flight systems. These systems are directly applicable to the Space Shuttle and X-33 programs.

- The flight data will provide the first high resolution relative GPS filter demonstration and validate GPS RF signal generators as a basis for developing and testing state of the art relative GPS filter designs.

- The flight demonstration will continue AR&C systems development, and provides data for Flight Robotics Laboratory (FRL) verification.

- The flight demonstration will increase confidence in all digital simulations and provide verification of hardware-in-the-loop testing and will be used to validate MARCSIM (MSFC Automated Rendezvous and Capture Simulation). MARCSIM is an all digital simulation environment designed to develop future vehicle avionics systems with lower development risk.

- The flight data will significantly reduce risk for the development of the RLV automated systems as currently planned.

- The flight experiment meets the HEDS objective of providing an unique opportunity for hands-on experience for high potential young NASA Engineers.

For the long term,

- The demonstration of the ability to autonomously rendezvous and dock and then depart will create the possibility for small unmanned free fliers to undock from the ISS and free fly to another location to perform microgravity experiments, astronomical observations, or experiments that would jeopardize the safety of the crew or ISS.

B.2 Management Plan

B.2.1 Responsibility

The Office of Space Access and Technology (OSAT) is the NASA Headquarters office responsible for the AR&C Program and the AR&C flight experiment. The NASA Associate Administrator for Space Access and Technology has delegated the authority for the management and direction of the AR&C Program to the Advanced Transportation Division.

MSFC, as the lead project management center for AR&C, has overall implementation responsibility for the AR&C Program. MSFC is specifically responsible for: designing, developing, and testing the AR&C system; defining and developing an AR&C operations concept; developing and operating ground simulators and facilities in support of the AR&C program; maintaining configuration control of the technical and program interfaces; preparation and maintenance of project plans, specifications, schedules, and budgets; and preparing and publishing the AR&C post-flight report.

The AR&C Project Office, within the Science and Applications Project Office, has been established at Marshall Space Flight Center. The organizational structure is shown in Figure 13. The project office will be responsible for planning, coordinating, and interfacing with other projects and Centers as appropriate.

MSFC will perform the system engineering and integration (SE&I) tasks required for the development of the AR&C flight experiment. These tasks will include:

- Definition and maintenance of specifications and requirements
- Establishing and defining interfaces
- Development of test requirements
- Conducting formal reviews and Technical Interchange Meetings (TIM)
- Developing AR&C hardware and software designs
- Verification/Qualification testing.

B.2.2 Key Personnel in Support of AR&C

Name	Performing Activity	Experience (years)
Allen, Dave	Simulation Software	33
Beam, Gene	Project Manager	33
Book, Michael	Video Guidance Sensor Target	11
Brooks, Joe	Interface Documents	31
Bryan, Tom	Test Lead for AR&C	18
Clifford, Carolyn	Planning / Schedules	23
Coffman, Mark	Math Models	8
Cole, Helen	Filter & Laser Optical Design & Analysis	5
Cozelos, Meg	OBC Software Design	5
Crumbley, Robert T	Software Integration and Test	9
Cruzen, Craig	Guidance and Navigation, SRD	6
Dabney, Richard	Control Design,	16
Daniel, Kyle	Safety & Mission Assurance	5
Dietrich, Thomas	Wire Harnesses	5
Finnell, Woolsey	Business Manager	34
Forbes, John	TPDM Mechanical Systems,	17
Franks, Greg	IPCL Document	12
Freestone, Todd	GPS RF Simulator	6
Hanson, John	Guidance	6
Heaton, Andy	Orbital Mechanics	9
Howard, Richard	Video Guidance Sensor Design	15
Humphries, Rick	On Board Computer Design	19
Jacobs, William	TPDM Electronics	13
Kittredge, Sheryl	Thermal Analysis & Design	6
Lohr, Jon	Guidance, Global Positioning System	6
Lomas, Jim	GPS, Navigation & Targeting	8
McKemie, Robert	System Verification	26
Montgomery, Randall	Packaging	6
Neighbors, Ben	Integration	10
Niehuss, Keith	Space Environments	7
Olsen. Carrie	Orbital Mechanics - CAMS	13
Pearson, Dallias	Chief Engineer	26
Roe, Fred	Flight Robotics Laboratory	31
Shannon, Don	Resources	22
Shapiro, Alan	Filter & Laser Optical Design & Analysis	8
Shelton, Wayne	AR&C CCB Secretariat	9
Siersma, David	AR&C System Test Coordinator	14
Sutherland, Tom D.	VGS Electronics	13
Swaim, Kenneth	Stress and Fracture	11
Thornhill, Bruce	On Board Computer Software Lead	37
Wagner, Carole	Material and Processes	16
Weddendorf, Bruce	Target Mechanical Design and Analysis	7

B.2.3 Flight Demonstration Management Structure

The organizational chart of the flight demonstration management structure is shown in Figure 14.

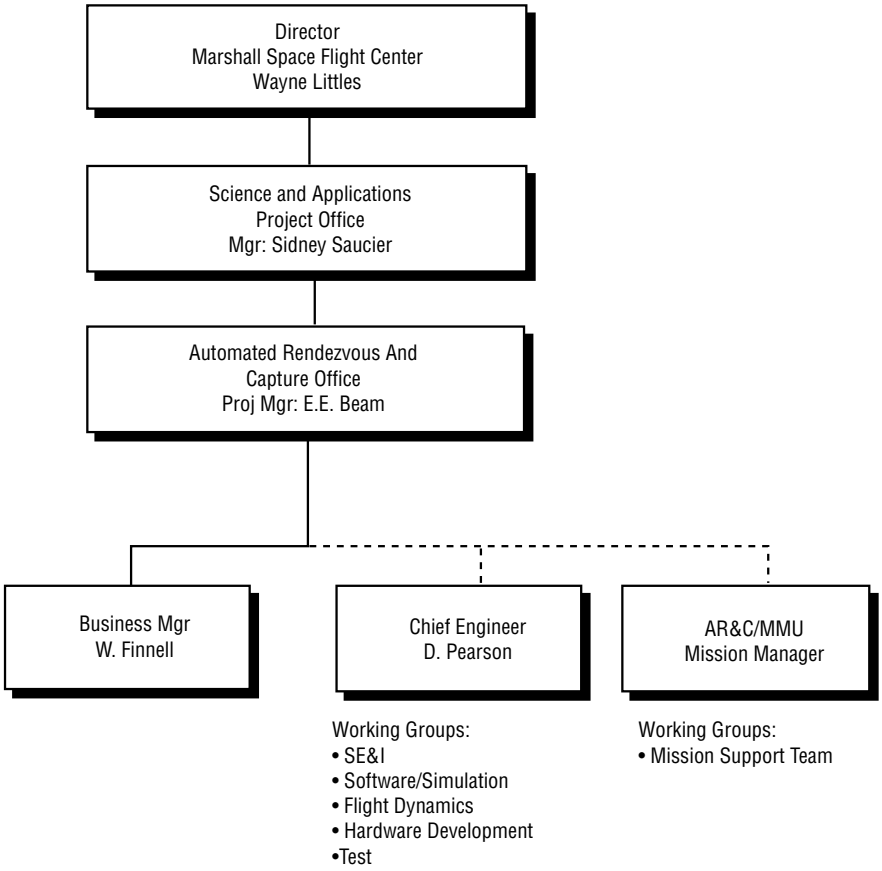

Figure 14. Flight demonstration management structure.

B.2.4. Schedule

Milestones of the flight demonstration management are shown in Figure 15.

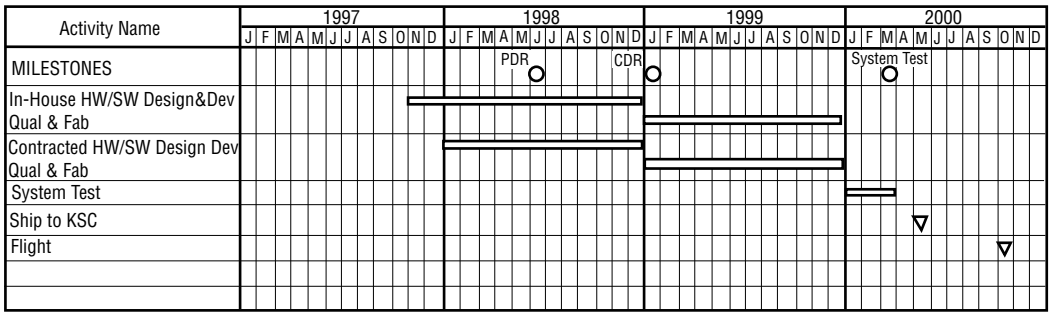

Figure 15. Flight demonstration management schedule.

B.3 Cost Plan

B.3.1 Cost Estimate

A cost estimate is shown in table 1 below (all costs are in FY 1996 $K):

Table 1. Cost estimate.

ITEM	QUANTITY	COST $K	COMMENT
VIDEO GUIDANCE SENSOR (VGS)	1	$0	NASA PROVIDED AT NO COST
VGS TARGET	1	$0	NASA PROVIDED AT NO COST
VGS TARGET MOUNT	1	$0	NASA PROVIDED AT NO COST
COMPUTER (R3000 WITH INTERNAL DATA STORAGE)	1	$290	SEER-H COST MODEL ESTI
MATED SPACELAB PALLET OR MPESS	1	$0	NASA PROVIDED AT NO COST
COMMUNICATIONS PACKAGE:			
–TRANSCEIVER	2	$1017	SEER-H COST MODEL ESTIMATED
–DUPLEXER	2	$452	SEER-H COST MODEL ESTIMATED
–ANTENNA	2	$7	SEER-H COST MODEL ESTIMATED
BATTERY PACK	1	$94	SEER-H COST MODEL ESTIMATED
POWER DISTRIBUTION UNIT (PDU)	1	$40	ENGINEERING ESTIMATE
ENCLOSURE (IMAX)	1	$324	IN-HOUSE USING THREE SUPPORT CONTRACTORS
THREE POINT DOCKING MECHANISM	3	$30	ENGINEERING ESTIMATE
PALLET MOUNTING	1	$0	NASA PROVIDED AT NO COST
GPS RECEIVER	2	$325	SEER-H COST MODEL ESTIMATED
GPS ANTENNA	2	$7	SEER-H COST MODEL ESTIMATED
RMS GRAPPLE FIXTURE	1	$0	NASA PROVIDED AT NO COST
LAP TOP COMPUTER (AFT FLIGHT DECK)	1	$0	NASA PROVIDED AT NO COST
SOFTWARE (INCLUDING DMS & V&V)		$418	IN-HOUSE USING TWO SUPPORT CONTRACTOR
MMU ONE FLIGHT CERTIFICATION AND REFURBISHMENT		$0	CONTRACTOR CONTRIBUTION
CARRIER FIXTURE & HOLD DOWNS FOR MMU ON PALLET		$314	ENGINEERING ESTIMATE
PDU MODIFICATION (INTERFACE WITH NASA PDU)		$52	ENGINEERING ESTIMATE
MMU MODIFICATIONS TO ACCOMMODATE AR&C ENCLOSURE		$418	ENGINEERING ESTIMATE
AR&C INTEGRATION & TEST		$296	NASCOM PERCENTAGE OF CONTRACTED EFFORT (70%)
AR&C/MMU INTEGRATION & TEST		$222	NASCOM PERCENTAGE OF CONTRACTED EFFORT (70%)
MMU/PALLET INTEGRATION & TEST		$222	NASCOM PERCENTAGE OF CONTRACTED EFFORT (70%)
ORBITER INTEGRATION & TEST		$209	PROVIDED BY AR&C OFFICE
TOTAL	$4,737		
RESERVES	$ 500		
	$5,237		

B.3.2 Cost Monitoring Plan

Project costs will be allocated to the Responsible Design Engineers (RDE's) performing the work, where possible. A status of project expenditures will be periodically reviewed.

Program reviews will be scheduled by the Program Manager as required to review the status of AR&C development, planning, budget, and issues affecting the successful completion of Program objectives defined in the Program Commitment Agreement (PCA).

The NASA Project Manager will schedule quarterly progress reviews which will include the participation of representatives from other NASA Centers and NASA Headquarters. The reviews will cover overall status information and will include schedule status, change status, performance status, interface coordination, and other management and technical topics.

Technical working groups have been formed to serve as the focus for discussing and resolving technical problems, airing system integration issues and performing other functions such as developing need dates and associated work schedules for activities between members of the group. The working groups will expedite decisions and promote concurrent engineering within the AR&C project. The working groups are: (1) System Engineering & Integration, (2) Software/Simulation, (3) Flight Dynamics, and (4) Hardware Development and Test.

Within each working group, Responsible Development Engineers (RDE) have been assigned for each product area. The RDE's are charged with the primary responsibility for their assigned area/product and for the maintenance of cost, schedule, and technical performance within the budgets allocated by the AR&C Project Manager.

B.3.3 Itemized Costs

The following cover the itemized costs:

a. Materials (itemize those over $10,000)
   See Table 1
b. Major Contracts
   Lockheed Martin
c. Other costs, with explanations
   See Table 1
d. Total cost of the Proposed Flight Demonstration
   $5.237 million
e. Human resources
   Civil Servants:
      Year 1—25 FTE's
      Year 2—30 FTE's
      Year 3—15 FTE's

APPENDIX C—AUTOMATED RENDEZVOUS AND CAPTURE FLIGHT EXPERIMENT UTILIZING TWO SPARTAN SPACECRAFTS

C.1 Marshall Space Flight Center Automated Rendezvous and Capture Closed Loop Flight Experiment

C.1.1 Abstract

A NASA flight demonstration of the critical systems and technologies for accomplishing Automated Rendezvous and Capture (AR&C) of space vehicles in Earth orbit. AR&C provides a system that requires little or no ground support and is capable of automated operations with onboard sensors and navigation providing the intelligence to complete docking maneuvers.

The flight demonstration would exhibit:

- A full-up, closed loop, automated rendezvous and capture mission
- Utilization of Automated Guidance Navigation and Control logic
- Absolute and Relative GPS (Global Positioning System) and VGS (Video Guidance Sensor) navigation and transitions between navigation methods
- Soft docking
- Three Point Docking Mechanism (TPDM) operations
- Truth data for verification of ground test facilities.

The AR&C flight demonstration will complete the development of an enabling technology that will support manned Mars missions. The flight demonstration will increase the readiness level of a technology that is not currently available in NASA. The AR&C technology has been judged an enabling technology for the Reusable Launch Vehicle program and is currently being evaluated for applications on the X-33 program. The AR&C flight demonstration is important because it demonstrates a system for reducing future operations and development costs for projects that implement AR&C.

C.1.2 Demonstration Approach

The flight demonstration of AR&C system utilizes two Spartan spacecraft's and flight support structures. The Spartan Target vehicle is a unmodified, nonpropulsive attitude only cooperative spacecraft and includes a GPS receiver, UHF Transmitter, VGS target, and TPDM trunnions. The modified Spartan Chase vehicle is deployed with propulsive capability. The chase vehicle contains an AR&C system that houses the hardware and software needed to control the spacecraft for the AR&C mission.

The Spartan is modified to accept the automated control inputs from the AR&C system as described in MSFCRQMT-2371, *AR&C System Requirement Document* and *ICD-3-60053 AR&C Interface Definition Document.* The Spartan spacecraft's are deployed from the flight support structure in the Orbiter payload bay utilizing the Orbiter RMS. After deployment of the target, the Orbiter moves away to 4 km and deploys

the Chase vehicle. After the Orbiter establishes a safe distance from the two spacecraft, the Orbiter sends an activation command that begins the AR&C mission. The mission will demonstrate transfer between navigation methods including Absolute to Relative GPS, Relative GPS to VGS, and VGS long-range target to VGS short-range target. The mission will also demonstrate automated navigation and control of the chase vehicle, a zero velocity dock, and a collision avoidance maneuver. During the mission, the Orbiter will transmits it's GPS data to the Chase vehicle as it departs and approaches the Spartan spacecraft. The GPS data will be used to establish long-range relative and absolute GPS navigation results as compared to the Orbiter's Best Estimated Truth (BET) of the relative displacement between the Orbiter and Chase vehicle.

C.1.3 Subsystems and Facilities

C.1.3.1 Automated Guidance Navigation and Control. The AR&C Ground Test Program has developed GN&C software that is designed to fly an automated spacecraft from booster separation to final dock with the target spacecraft. The GN&C software contains advanced targeting and relative GPS navigation and attitude determination algorithms that support efficient orbital operations and consumables management. This software has successfully completed initial testing and currently is being prepared for final AR&C systems test. Detailed technical papers describing the guidance schemes, overall implementation, and a *AR&C OBC Software Requirements Specification MSFCSPEC-2441* are available through the AR&C Project Office.

C.1.3.2 Close Range Sensor. The AR&C Video Guidance Sensor (VGS) was designed to provide a zero velocity docking capability to reduce impact loads on the International Space Station (ISS). A zero velocity docking capability is currently unavailable in present unmanned docking systems. The sensor can meet all velocity and accuracy requirements for all known docking mechanisms. The VGS has been successfully demonstrated in a six degree of freedom, closed-loop simulation environment including solar effects. The sensor will be tested in a open-loop flight test currently scheduled in October 1997 on the SPARTAN - STS-87 mission. The sensor design requirements and capabilities are available in the *VGS Contract End Item (CEI) Specification*, MSFCSPEC-2614 and *VGS Flight Experiment Requirements Document*, MSFCRQMT-2615.

C.1.3.3 GPS Navigation. The AR&C Global Positioning System (GPS) receivers were designed to provide relative navigation between two orbiting spacecraft. The term "*Relative GPS*" differs from absolute or differential GPS in that both the target and chase vehicles are both moving relative to any fixed reference frame. Therefore, while the exact locations are only determined to the accuracy of the GPS system (i.e. ± 100 meters), the relative distances between the spacecraft are known to within one meter (1 Sigma). This type of accuracy is required to enable the transition between the GPS and the close range sensor.

Technical data for the relative navigation filter is available in the form of Relative GPS Navigation Statement of Work (SOW), AIAA technical papers and presentations, and Final GPS Navigation Filter Test Results that will be released at the conclusion of the final filter test.

C.1.3.4 Docking Mechanisms. Flight development models of the TPDM have been designed, built and tested. Contact dynamics testing at MSFC's 6 Degree-Of-Freedom (DOF) Facility verified the TPDM analytical analyses. The AR&C system requirements were based on the TPDM alignment requirements. Technical requirements may be found in the *TPDM Specification and Users Manual*, MSFCSPEC-2483.

C.1.3.5 Facilities. An objective of the AR&C program is to develop and validate ground facilities that will support the evaluation of AR&C systems for future spacecraft, and reduce the cost and technical risk for projects that implement automated rendezvous and docking. The MSFC Flight Robotics Laboratory was developed to fulfill this requirement and is scheduled to be completed in the spring of 1997. This unique facility has the capability to evaluate avionics, software, and hardware in closed loop simulations that re-creates the dynamic and lighting conditions for two spacecraft docking in orbit. A detailed facility description may be found in the *MSFC Flight Robotics Laboratory Description* document and the *FRL Users Manual* (volumes 1, 2, and 3) from the AR&C Project Office.

5/12/97

C.1.4

AR&C FLIGHT DEMO
FUNDING PROFILE
(ROM 4/14/98)

	FY99	FY00	FY01
MSFC	800k	800k	500k
GSFC	1M	2M	1M
TOTALS	1.8M	2.8M	1.5M

ASSUMPTIONS:

(1) AR&C Shuttle demo using two Spartan spacecrafts. One as is and one modified.
(2) Secondary payloads to share costs
(3) Single string demo H/W
(4) 36-to-40 month program from ATP
(5) Modify one Spartan spacecraft for translation
(6) Spartan QUE H/W available
(7) MSFC inhouse DDT&E and no PMS cost.

LEVERAGE:

(1) AR&C Flight Experiment in Nov 97 and Oct 98 (Sensor and Target H/W test on both flights)
(2) Three Point Docking Mechanism developed
(3) Inhouse ground program developing S/W and ground test facilities
(4) Spartan Program vehicle inventory.

APPENDIX D—AUTOMATED RENDEZVOUS AND CAPTURE FLIGHT EXPERIMENT UTILIZING A SPARTAN SPACECRAFT AND A USAF MICRO-SATELLITE

WBS	11/07/2001	Recurring
BNA	**DESCRIPTION**	**Total($k)**
1.1.0	TECHNICAL MANAGEMENT	189.6
1.2.0	BUSINESS MANAGEMENT	280.8
1.4.0	DATA MANAGEMENT	18.3
1.5.0	PROPOSAL PREPARATION	0.0
2.1.0	VEHICLE DESIGN	0.0
2.2.0	VEHICLE ANALYSIS	0.0
2.3.1	ATTITUDE CONTROL	0.0
2.3.2	DIVERT CONTROL	0.0
2.3.3	INTEGRATION & TEST	25.7
2.4.1	SENSOR	0.0
2.4.3	ELECTRONICS	0.0
2.4.4	CABLES	0.0
2.4.6	TELEMETRY	0.0
2.4.7	PRIME POWER SUBSYSTEM	0.0
2.4.8	AVIONICS INTEG & TEST	155.6
2.4.9	SOFTWARE	87.3
2.5.1	EJECTION MECHANISM	0.0
2.5.3	THERMAL CONTROL	0.0
2.5.4	INTERFACE PLATE	0.0
2.6.0	VEHICLE INTEGRATION & TEST	43.7
2.7.1	ELECTRICAL TEST EQUIPMENT	0.0
2.7.2	MECHANICAL TEST EQUIPMENT	0.0
3.1.0	SYSTEM ANALYSIS	410.7
3.2.0	SYSTEM DESIGN & REQUIREMENTS	525.5
3.3.1	QUALITY ASSURANCE	91.4
3.3.2	SYSTEM SAFETY	163.3
3.3.3	RELIABILITY, MAINT. & PRODUC	12.1
4.1.0	AIR BEARING TEST	0.0
4.2.0	HOVER TEST	0.0
4.3.0	QUALIFICATION TESTS	15.2
4.4.0	ACCEPTANCE TESTS	91.8
4.5.1	TEST PLAN	0.0
4.5.2	PAYLOAD/LAUNCH VEHICLE INTEG.	0.0
4.5.3	FLIGHT OPERATIONS	0.0
4.5.4	FLIGHT TEST DATA ANALYSIS	0.0
5.0.0	SPECIAL STUDIES	0.0
		0.0
	TOTAL COST	2111.0
		0.0
	MATERIAL	1132.4
	TRAVEL	135.9
	ODC	11.0
		0.0
	SUBTOTAL PRICE	3390.2

AFRL Provided

	AFRL Integration & Env. Test	675.0
	Cameras+Mods	480.0
	NRL SGLS Xponder	450.0
	Re-Chargeable Batteries+Solar Array	475.0
	TOTAL PRICE	**5470.2**

Engineering Assumptions:

(1) One vehicle - XSS-10 micro-sat design
existing avionics design
SAIC cameras provided GFE for mods
bi-prop diverts ~ 250m/sec
cold-gas ACS ~ 45m/sec
cold gas axial
GPS data imbedded downlink
1M bps downlink S-band
addition of rechargeable LiIon
addition of solar cells

(2) One DTV (cable/structural mock-up)

Programmatic Assumptions:

(1) Spartan reflight costs ~$2.5M
(2) Shuttle flight costs waived (as XSS-10)
(3) Software specifics for camera provided by MSFC
(4) MSFC helps in rendezvous/dock software, if required

REFERENCES

1. "NASA Automated Rendezvous and Capture Review, Executive Summary," NASA TM-108597, NASA Headquarters, Williamsburg, VA, November 19-21, 1991, pp. 3-4.

2. Chiarrappa, D., "Analysis and Design of Space Vehicle Flight Control Systems, Volume VIII-Rendezvous and Docking," NASA CR-827, prepared by General Dynamics Corp., San Diego, CA for the NASA-Marshall Space Flight Center, AL, July 1967, p. 3.

3. Burton, J.R., "Rendezvous With the Gemini Spacecraft," *Proceedings of the Symposium on Space Rendezvous, Rescue, and Recovery, Volume 16, Part 2*, American Astronautical Society, Edwards Air Force Base, CA, September 10-12, 1963, pp. 173-176.

4. Ballard, H.J., "Agena Target Vehicle for Gemini," *Proceedings of the Symposium on Space Rendezvous, Rescue, and Recovery, Volume 16, Part 2*, American Astronautical Society, Edwards Air Force Base, CA, September 10-12, 1963, pp. 177-187.

5. Chiarrappa, D., "Analysis and Design of Space Vehicle Flight Control Systems, Volume VIII-Rendezvous and Docking," NASA CR-827, prepared by General Dynamics Corp., San Diego, CA for the NASA-Marshall Space Flight Center, AL, July 1967, pp. 46-47.

6. Quigley, W.W., "Gemini Rendezvous Radar," AIAA paper 63-650, AIAA Guidance and Control Conference, Cambridge, MA, August 12-14, 1963.

7. Jones, V.E. and Mangelsdorf, J.E., "Preliminary Rendezvous Experiments Definition and Design," Lockheed Missiles & Space Company, Sunnyvale CA, p. 4-1.

8. Chiarrappa, D., "Analysis and Design of Space Vehicle Flight Control Systems, Volume VIII-Rendezvous and Docking," NASA CR-827, prepared by General Dynamics Corp., San Diego, CA for the NASA-Marshall Space Flight Center, AL, July 1967, p. 31.

9. *NASA Pocket Statistics, 1997 Edition*, NASA Headquarters Facilities and Logistics Management, Washington, DC, pp. B-100 to B-102.

10. "Apollo Lunar Landing Mission Press Kit, 25th Anniversary Souvenir Edition," NASA Headquarters, Washington, DC, July 20, 1994, pp. 86-107.

11. Felleman, P.G., "Rendezvous Requirements for the Apollo Mission," *Proceedings of the Symposium on Space Rendezvous, Rescue, and Recovery, Volume 16, Part 2*, American Astronautical Society, Edwards Air Force Base, CA, September 10-12, 1963, pp. 133-135.

12. *National Space Transportation System Reference, Volume 1, Systems and Facilities.* National Aeronautics and Space Administration, June 1988, pp. 588-591, 681-791.

13. "Space Shuttle Mission STS-86, Shuttle MIR Mission-07 (S/MM-07): Press Kit." National Aeronautics and Space Administration, September 1997.

14. "MIR 1 SPACE STATION: A Technical Overview," NPO Energia LTD, Alexandria, VA, 1995, p.48.

15. Legostayev, V.P. and Raushenbakh, B.V., "Automatic Rendezvous in Space," Foreign Technology Division, FTD-HT-23-21346-68, December 1968.

16. Lenorovitz, J.M., "Soviets Upgrading Space Transports To Support Manned Station Activities," *Aviation Week & Space Technology,* New York, NY, October 23, 1989, p.49.

17. "MIR MISSION REPORT: PROGRESS M-7 CATASTROPHE AVOIDED," *Spaceflight*, British Interplanetary Society, London, England, June 1991, pp. 192-193.

18. " Crash in Space Leaves Mir's Future Uncertain," *Final Frontier*, ATG Media, Holleywood, CA, September/October 1997, pp. 10-11.

19. Littleton, F.C., "A Description of Hardware and Mission Planning for the Apollo-Soyuz Test Project," *Proceedings of the Twelfth Space Congress,"* Cocoa Beach, FL, April 9-11, 1975, pp. 4-7 to 4-14.

20. Gonzalez, R. and Culp, R. D., "Investigation of an Rbar/Cusp Approach for Russian Rendezvous to Space Station Alpha," AAS paper 95-123, *Proceedings of the 5th AAS/AIAA Spaceflight Mechanics Conference*, Albuquerque, NM, February 13-16, 1995, pp. 979-998.

21. NASA Automated Rendezvous and Capture Review, Executive Summary," NASA TM-108597, NASA Headquarters, Williamsburg, VA, November 19-21, 1991, pp. 34-35.

22. Wilson, A., editor, *Jane's Space Directory, Twelfth Edition, 1996-1997*, Jane's Information Group Inc, Alexandria, VA, 1996, p. 36.

23. "NASA Automated Rendezvous and Capture Review, Executive Summary," NASA TM-108597, NASA Headquarters, Williamsburg, VA, November 19-21, 1991, pp. 2-4.

24. "NASA Automated Rendezvous and Capture Review." NASA TM-108598, NASA Headquarters, Williamsburg, VA, November 19-21, 1991.

25. "Automated Rendezvous and Capture Demonstration Study Final Report," NASA CR-192587, Applied Research, Inc., Arlington, VA, June 11, 1993.

26. Smith, E.C., "Automated Rendezvous and Capture Independent Assessment, December 17, 1993, Final Report," briefing charts, Advanced Programs Division, Office of Space Systems Development, NASA Headquarters, Washington, DC 20546.

27. Polites, M.E. and Bartlow, B.E., "United States Control Module Guidance, Navigation, and Control Subsystem Design Concept," NASA TP-3677, NASA Marshall Space Flight Center, AL, March 1997.

28. McCandless II, B., "Reusable Launch Vehicle Crew Operations," presentation in the Future Transportation Session of the AIAA Defense and Space Programs Conference, Huntsville, AL, September 24, 1997.

29. Scofield, W.T. and Mellin, J.R., "A Feasibility Study of Unmanned Rendezvous and Docking in Mars Orbit," Martin Marietta report MCR 74-244, JPL contract 953746, September 1974.

30. Vandenberg, F.A., "Autonomous Rendezvous and Docking in Mars Orbit," AAS paper 75-070, AAS/AIAA Astrodynamics Specialist Conference, Nassau, Bahamas, July 28-30, 1975.

31. Kos, L. "Human Mars Mission (HMM) Architecture and Mars Transportation System (MTS) Study: Design Reference Mission (DRM) Summary," briefing charts, Program Development, NASA-Marshall Space Flight Center, AL 35812, July 10, 1997.

32. Howard, R.T. and Book, M.L., "Video Guidance Sensor for Automated Capture," AIAA paper 92-1389, AIAA Space Programs and Technologies Conference, Huntsville, AL, March 24-27, 1992.

33. Locke, J.W. and Casey, L.D., "Rendezvous Radar for Orbital Vehicles," AIAA paper 92-1689, AIAA Space Programs and Technologies Conference, Huntsville, AL, March 24-27, 1992.

34. Backes, P.G., "Supervised Autonomous Control, Shared Control, and Teleoperation for Space Servicing," *Proceedings of the Space Operations, Applications, and Research Symposium*, Houston, Texas, August 4-6, 1992.

35. Landzettel, K., Brunner, B., and Hirzinger, G., "The Telerobotic Concepts for Experimental Servicing Satellite (ESS)," IARP Workshop on Space Robotics, Monteal, Canada, July 6-8, 1994.

36. Scott, W.B., "U.S. Defines Missions For Military Spaceplane," *Aviation Week & Space Technology*, January 13, 1997, pp.362-363.

37. Scott, W.B., "USAF Set to Fly Mini-Spaceplane," *Aviation Week & Space Technology*, August 4, 1997, pp. 20-21.

38. Mankins, J.C., "The Space Solar Power Option," *Aerospace America*, May 1997, pp. 30-36.

39. Bryan, T.C., Roe, F.,and Coker, C., "Automated Rendezvous and Capture Development Infrastructure," AIAA paper 92-1392, AIAA Space Programs and Technologies Conference, Huntsville, AL, March 24-27, 1992.

40. "Automated Rendezvous and Capture: A New Alternative," a brochure published by the NASA Marshall Space Flight Center, AL 35812.

41. Upadhyay, T.N., Cotterill, S., and Deaton, A.W., “Autonomous Reconfigurable GPS/INS Navigation and Pointing System for Rendezvous and Docking,” AIAA paper 92-1390, AIAA Space Programs and Technologies Conference, Huntsville, AL, March 24-27, 1992.

42. “User’s Manual for the Trajectory Control Sensor Command and Display User Interface, 6/5/97, Revision 5.8,” JSC 27870, Avionics Systems Division, Engineering Directorate, NASA Johnson Space Center, Houston, Texas, June 5, 1997, p. 4.

43. Williams, T. and Tanygin, S., “On-Orbit Engineering Tests of the AERCam Sprint Robotic Camera Vehicle,” AAS paper 98-171, AAS/AIAA Space Flight Mechanics Meeting, Monterey, CA, February 9-11, 1998.

44. Sackos, J., Nellums, B., and Diegert, C., “Scannerless Range Imager,” briefing charts to NASA by Sandia National Laboratories, December 9, 1997.

45. “DTO 700-11: Orbiter Space Vision System Flight Testing,” *Flight Test and Supplementary Objectives Document, Rev U, NSTS 16725*, NASA Johnson Space Center, Houston, TX, February 24, 1998.

46. Gelderloos, H.C., Sheikh, S.I., and Schipper, B.W., “GPS Attitude System Integrated with an Inertial System for Space Applications,” *Proceedings of the 16th AIAA/IEEE Digital Avionics Systems Conference, Volume II*, Irvine, CA, October 26-30, 1997, pp. 8.1-1 to 8.1-10.

47. Bunn, R.L., “GPS/INS Autonomous Navigation Systems for Space Applications,” AAS paper 98-016, 21st Annual AAS Guidance and Control Conference, Breckenridge, CO, February 4-8, 1998.

48. Lau, K., Lichten, S., Young, L., and Haines, B., “An Innovative Deep Space Application of GPS Technology for Formation Flying Spacecraft,” AIAA paper 96-3819, AIAA GN&C Conference, San Diego, CA, July 29-31, 1996.

49. Lichten, S., Purcell, G., Wu, S., Kuang, D., Srinivasan, J., Young, L., and Lau, K., “Autonomous Formation Flyer (AFF) Sensor Technology Development,” AAS paper 98-062, 21st Annual AAS Guidance and Control Conference, Breckenridge, CO, February 4-8, 1998.

50. “Memorandum of Agreement Between Air Force Space Command and National Aeronautics and Space Administration and Air Force Research Laboratory for Cooperation on the XSS-10 Micro-Satellite Program,” draft copy, NASA Rev 5.1 XSS-10-MOA-NASA-51.doc, March 6, 1998.

51. Hunter, R. and Barnhart, D., “Micro-Satellite Development Activities: Technology Roadmap & Demonstration Plan for Space Logistics,” briefing charts, Air Force Research Lab, March 1998.

52. Fehse, W., Tobias, A., Champetier, C., Pairot, J.M., and Pauvert, C., “A Guidance, Navigation and Control System for Rendezvous and Proximity Operations Between Hermes, The Columbus Free Flyer and The Space Station Freedom,” AAS paper 91-063, *Proceedings of the Annual Rocky Mountain Guidance and Control Conference*, Keystone, CO, February 2-6, 1991, pp.385-409.

53. Cirillo, W.M., Saucillo, R.J., Hendershot, J.E., and Green, J.L., "Design Reference Mission Specifications for the ESA Automated Transfer Vehicle," IAF paper IAF-93-V.2.609, 44th Congress of the International Astronautical Federation, Graz, Austria, October 16-22, 1993.

54. Pairot, J.M., Frezet, M., Tailhades, J., Fehse, W., Tobias, A., and Getzschmann, A., "European Rendezvous and Docking System," IAF paper IAF-91-328, 42nd Congress of the International Astronautical Federation, Montreal, Canada, October 5-11, 1991.

55. Wilson, A., editor, *Jane's Space Directory, Twelfth Edition 1996-1997*, Jane's Information Group Inc., Alexandria, VA, 1996, pp. 121-124, 190.

56. De Selding, P.B., "Negotiations Place ATV Back on Track," *Space News*, April 6-12, 1998, pp.1, 34.

57. Ress, R. and Puech, P., "The Automated Transfer Vehicle ATV-Central Element of Europe's New Manned Space Transportation Programme," IAF paper IAF-94-V.2.531, 45th Congress of the International Astronautical Federation, Jerusalem, Isreal, October 9-14, 1993.

58. Clar, P.G., Theillier, F., and Triou, H., "Analysis of Control Accuracy in the Final Phase of the Rendezvous Between the Automated Transfer Vehicle and the Space Station Freedom," AAS paper 93-342, *Spaceflight Dynamics 1993, Volume 84, Part II, Advances in the Astronautical Sciences*, American Astronautical Society, San Diego, CA, 1993, pp.1295-1306.

59. Cislaghi, M., Lellouch, M., and Pairot, J.M., "The ATV Rendezvous Pre-development (ARP) Project," *ESA Bulletin*, February 1997, pp. 60-67.

60. Telephone conversation with Gene Cook (281-244-8467), NASA Johnson Space Center Integration Manager for the ESA AR&D Flight Experiments, on April 9, 1998.

61. Telephone conversation with Kelly Pido (281-244-8215), NASA Johnson Space Center Liaison with ESA for ISS, on December 2, 1997.

62. Sekigawa, E. and Mecham, M., "NASDA plans November Launch for ETS-7, TRMM," *Aviation Week & Space Technology*, April 14, 1997, pp. 61-62.

63. Akimoto, T., Tetsuichi, I., and Miyaba, H., "Concept of H-II Orbiting Plane, HOPE," *Proceedings of the Sixteenth International Symposium on Space Technology and Science, Volume II*, 1988, pp. 1501-1506.

64. Yamanaka, K., "Rendezvous Strategy of the Japanese Logistics Support Vehicle to the International Space Station," *Proceedings of the 3rd ESA International Conference on Spacecraft Guidance, Navigation and Control Systems*, ESTEC, Noordwijk, The Netherlands, November 26-29, 1996, pp. 103-108.

65. Sekigawa, E., “Japan Forced to Cut HOPE, Other Programs,” *Aviation Week & Space Technology*, August 4, 1997, pp. 28-29.

66. Takagi, T., Tsuya, N., and Obara, H., “Orbital Servicing Vehicle,” *Proceedings of the Sixteenth International Symposium on Space Technology and Science, Volume II*, 1988, pp. 1591-1596.

67. *Aviation Week & Space Technology*, December 15, 1997, p.19.

68. *Aviation Week & Space Technology*, March 9, 1998, p.17.

69. *Aviation Week & Space Technology*, March 30, 1998, p.13.

70. Telephone conversation with Tony Bogner (617-258-4251) of The Charles Stark Draper Laboratory, Cambridge, MA, on April 8, 1998.

71. Tietz, J.C. and Kelly, J.H., “Development of an Autonomous Video Rendezvous and Docking System,” Martin Marietta Aerospace Report No. MCR-82-569, Final Report for NASA Contract No. NAS8-34679, Martin Marietta Aerospace: Denver Aerospace, Denver, CO, June 1982, p. III-3.

72. Pollmeier, V.M. and Kallemeyn, P.H., “Galileo Orbit Determination from Launch Through the First Earth Flyby,” *The Institute of Navigation: Proceedings of the Forty-Seventh Annual Meeting*, Williamsburg, VA, June 10-12, 1991, pp. 9-16.

73. Howard, R., “Video Guidance Sensor Technical Interchange Meeting,” briefing charts, NASA-Marshall Space Flight Center, AL 35812, March 3, 1998.

74. “NASA Automated Rendezvous and Capture Review, Executive Summary,” NASA TM-108597, NASA Headquarters, Williamsburg, VA, November 19-21, 1991, pp. 28-30.

75. *Space News*, April 13-19, 1998, pp. 3, 20.

76. *Aviation Week & Space Technology*, August 20, 1990, pp. 70-74.

77. “Potential Opportunities for Future Cooperative Technology Flight Experiments Relating to Space Solar Power and Wireless Power Transmission,” briefing charts by the Program Development Directorate of the NASA-Marshall Space Flight Center, AL 35812, March 1998.

78. E-mail from Jason Drake of the EVA Project Office at the NASA Johnson Space Center, Houston, TX, February 5, 1998.

REPORT DOCUMENTATION PAGE

Form Approved
OMB No. 0704-0188

Public reporting burden for this collection of information is estimated to average 1 hour per response, including the time for reviewing instructions, searching existing data sources, gathering and maintaining the data needed, and completing and reviewing the collection of information. Send comments regarding this burden estimate or any other aspect of this collection of information, including suggestions for reducing this burden, to Washington Headquarters Services, Directorate for Information Operation and Reports, 1215 Jefferson Davis Highway, Suite 1204, Arlington, VA 22202-4302, and to the Office of Management and Budget, Paperwork Reduction Project (0704-0188), Washington, DC 20503

1. AGENCY USE ONLY *(Leave Blank)*

2. REPORT DATE
July 1998

3. REPORT TYPE AND DATES COVERED
Technical Publication

4. TITLE AND SUBTITLE
An Assessment of the Technology of Automated Rendezvous and Capture in Space

5. FUNDING NUMBERS

6. AUTHORS
M.E. Polites

7. PERFORMING ORGANIZATION NAMES(S) AND ADDRESS(ES)
George C. Marshall Space Flight Center
Marshall Space Flight Center, AL 35812

8. PERFORMING ORGANIZATION REPORT NUMBER
M–877

9. SPONSORING/MONITORING AGENCY NAME(S) AND ADDRESS(ES)
National Aeronautics and Space Administration
Washington, DC 20546–0001

10. SPONSORING/MONITORING AGENCY REPORT NUMBER
NASA/TP—1998–208528

11. SUPPLEMENTARY NOTES
Prepared by the Astrionics Laboratory, Science and Engineering Directorate

12a. DISTRIBUTION/AVAILABILITY STATEMENT
Unclassified–Unlimited
Subject Category 17
Standard Distribution

12b. DISTRIBUTION CODE

13. ABSTRACT *(Maximum 200 words)*

This paper presents the results of a study to assess the technology of automated rendezvous and capture (AR&C) in space. The outline of the paper is as follows. First, the history of manual and automated rendezvous and capture and rendezvous and dock is presented. Next, the need for AR&C in space is established. Then, today's technology and ongoing technology efforts related to AR&C in space are reviewed. In light of these, AR&C systems are proposed that meet NASA's future needs, but can be developed in a reasonable amount of time with a reasonable amount of money. Technology plans for developing these systems are presented; cost and schedule are included.

14. SUBJECT TERMS
automated rendezvous and capture, automated rendezvous and dock, automated rendezvous and berth, automated rendezvous and inspection, technology assessment

15. NUMBER OF PAGES
60

16. PRICE CODE
A04

17. SECURITY CLASSIFICATION OF REPORT
Unclassified

18. SECURITY CLASSIFICATION OF THIS PAGE
Unclassified

19. SECURITY CLASSIFICATION OF ABSTRACT
Unclassified

20. LIMITATION OF ABSTRACT
Unlimited