NASA/TM—1999–209876

Friction Stir Welding for Aluminum Metal Matrix Composites (MMC's)

(MSFC Center Director's Discretionary Fund Final Report, Project No. 98–09)

J.A. Lee, R.W. Carter, and J. Ding
Marshall Space Flight Center, Marshall Space Flight Center, Alabama

December 1999

The NASA STI Program Office…in Profile

Since its founding, NASA has been dedicated to the advancement of aeronautics and space science. The NASA Scientific and Technical Information (STI) Program Office plays a key part in helping NASA maintain this important role.

The NASA STI Program Office is operated by Langley Research Center, the lead center for NASA's scientific and technical information. The NASA STI Program Office provides access to the NASA STI Database, the largest collection of aeronautical and space science STI in the world. The Program Office is also NASA's institutional mechanism for disseminating the results of its research and development activities. These results are published by NASA in the NASA STI Report Series, which includes the following report types:

- TECHNICAL PUBLICATION. Reports of completed research or a major significant phase of research that present the results of NASA programs and include extensive data or theoretical analysis. Includes compilations of significant scientific and technical data and information deemed to be of continuing reference value. NASA's counterpart of peer-reviewed formal professional papers but has less stringent limitations on manuscript length and extent of graphic presentations.

- TECHNICAL MEMORANDUM. Scientific and technical findings that are preliminary or of specialized interest, e.g., quick release reports, working papers, and bibliographies that contain minimal annotation. Does not contain extensive analysis.

- CONTRACTOR REPORT. Scientific and technical findings by NASA-sponsored contractors and grantees.

- CONFERENCE PUBLICATION. Collected papers from scientific and technical conferences, symposia, seminars, or other meetings sponsored or cosponsored by NASA.

- SPECIAL PUBLICATION. Scientific, technical, or historical information from NASA programs, projects, and mission, often concerned with subjects having substantial public interest.

- TECHNICAL TRANSLATION. English-language translations of foreign scientific and technical material pertinent to NASA's mission.

Specialized services that complement the STI Program Office's diverse offerings include creating custom thesauri, building customized databases, organizing and publishing research results…even providing videos.

For more information about the NASA STI Program Office, see the following:

- Access the NASA STI Program Home Page at ***http://www.sti.nasa.gov***

- E-mail your question via the Internet to help@sti.nasa.gov

- Fax your question to the NASA Access Help Desk at (301) 621–0134

- Telephone the NASA Access Help Desk at (301) 621–0390

- Write to:
  NASA Access Help Desk
  NASA Center for AeroSpace Information
  7121 Standard Drive
  Hanover, MD 21076–1320

NASA/TM—1999–209876

Friction Stir Welding for Aluminum Metal Matrix Composites (MMC's)

(MSFC Center Director's Discretionary Fund Final Report, Project No. 98–09)

J.A. Lee, R.W. Carter, and J. Ding
Marshall Space Flight Center, Marshall Space Flight Center, Alabama

National Aeronautics and
Space Administration

Marshall Space Flight Center • MSFC, Alabama 35812

December 1999

Acknowledgments

The Principal Investigator, Jonathan Lee, wishes to thank Robert Carter and Jeff Ding for their assistance in performing the friction stir welding. Furthermore, the authors would like to acknowledge the financial support from the Center Director's Discretionary Fund (CDDF) program office at MSFC and to Mark van den Bergh, from DWA Aluminum Composites, Inc., for supplying most of the composite material panels used in this study.

Available from:

NASA Center for AeroSpace Information
7121 Standard Drive
Hanover, MD 21076–1320
(301) 621–0390

National Technical Information Service
5285 Port Royal Road
Springfield, VA 22161
(703) 487–4650

TABLE OF CONTENTS

1. INTRODUCTION 1

2. POTENTIAL ISSUES IN JOINING MMC'S 2

   2.1 Solidification Effects 2
   2.2 Chemical Reactions 2
   2.3 Joint Preparation 2
   2.4 Qualitative Performance Rating 3

3. FRICTION STIR WELDING OF Al 6092/17.5 SiCp/T–6 MMC'S 5

   3.1 Background 5
   3.2 Experimental Procedures 6
   3.3 Results 8

4. FSW OF FUNCTIONAL GRADIENT Al MMC TO Al-Li 2195 12

   4.1 Background 12
   4.2 Experimental Procedures 13
   4.3 Results 13

5. TECHNOLOGY ASSESSMENT AND POTENTIAL APPLICATIONS 15

   5.1 Performance Limitations of FSW 15
   5.2 Potential Applications for MMC Flanges 15
   5.3 Other Potential Joining Techniques for MMC Flanges 16

6. CONCLUSIONS 18

7. RECOMMENDATIONS 19

REFERENCES 20

LIST OF FIGURES

1. Classification of selected joining methods for MMC's 4
2. Schematic drawing of FSW process 5
3. FSW in action and the pin tool's geometric design 6
4. Comparison of hardness values for candidate coating materials 7
5. Cross-sectional view of an FSW joint for MMC's (× 10) 8
6. Change in SiC particle sizes and distribution at the HAZ's edge boundary 9
7. Hardness measurement across the HAZ 11
8. Development of FGM for MMC plates 12
9. FGM with 18.5-percent edge reinforcement welded to Al-Li 2195 13
10. Unsuccessful welding of 50-percent SiC MMC plate to Al-Li 2195 14
11. MMC flanges reinforced with 50-percent SiC particulate for fuel line system 16

LIST OF TABLES

1. Chemical compositions of 6092 Al alloy as the matrix material 7

2. Typical properties of 6092 Al reinforced with 17.5-percent SiC particulate 7

3. Empirical parameters developed for FSW of MMC's 8

4. MMC joint strength results using uncoated pin tool 10

5. MMC joint strength results using B_4C-coated pin tool 10

6. FSW advantages and limitations for joining MMC's 15

LIST OF ACRONYMS AND SYMBOLS

Al	aluminum
Al-Li	aluminum-lithium
Al_2O_3	aluminum oxide
Al_4C_3	aluminum carbide
B_4C	boron carbide
CIJ	cast-insert joining
FGM	functional gradient material
FSW	friction stir welding
HAZ	heat-affected zone
HRC	hardness Rockwell “C” scale
GMAW	gas metal arc welding
GTAW	gas tungsten arc welding
IFW	inertia friction welding
ipm	inch per minute
MMC	metal matrix composite
MSFC	Marshall Space Flight Center
NPA	nanophase aluminum
RSP	resistance spot welding
SBIR	Small Business Innovative Research
Si	silicon
SiC	silicon carbide
TWI	The Welding Institute
UTS	ultimate tensile strength
WC	tungsten carbide

TECHNICAL MEMORANDUM

FRICTION STIR WELDING FOR ALUMINUM METAL MATRIX COMPOSITES (MMC'S) (MSFC Center Director's Discretionary Fund Final Report, Project No. 98–09)

1. INTRODUCTION

In order to fabricate certain structures from metal matrix composites (MMC's), effective joining methods must be developed to join MMC's to the same or to different monolithic alloys. Since MMC's utilize a variety of nonmetallic reinforcements such as silicon carbide (SiC), boron carbide (B_4C), aluminum oxide (Al_2O_3), graphite, etc., these nonmetallic reinforcements will naturally impose limitations for joining MMC's using conventional methods for monolithic metals.

This report describes an investigation into the use of the friction stir welding (FSW) process for joining a variety of Al MMC's reinforced with discontinuous SiC particulate and functionally gradient material (FGM). FSW is a fairly new solid state welding process for joining metals by plasticizing and consolidating materials around the bond line using thermal energy produced from localized friction forces. The process does not require the need for gas shielding or filler metal. The FSW process consists of a special rotating pin tool that is positioned to slowly plunge into the MMC surface at the bond line. As the tool rotates and moves forward along the bond line, the material is heated up and forced to flow around the rotating tips, forming a solid state joint. FSW has the potential for producing sound welds with MMC's because the processing temperature occurs well below the melting point of the metal, thereby reducing the reinforcement-to-matrix solidification defects and undesirable chemical reactions.

Preliminary results show that FSW is feasible to weld Al MMC's to MMC's or to aluminum-lithium (Al-Li) 2195 if the SiC reinforcement is <25 percent by volume. Tensile strength, hardness, and microstructure of these welds were characterized in both the as-welded and post heat treatment conditions. However, a softening in the heat-affected zone (HAZ) was observed and is known to be one of the major limiting factors for joint strength. The pin tool's material is made from a low-cost steel tool H–13 material, and the wear was excessive such that the pin tool length had to be manually adjusted for every 5 ft of weldment. Initially, B_4C coating was developed for pin tools, but it did not show significant improvement in wear resistance. Basically, FSW is applicable mainly for butt joining of flat plates. Therefore, FSW of cylindrical articles such as a flange to a duct, with practical diameters ranging from 2–5 in., must be fully demonstrated and compared with other proven MMC joining techniques.

2. POTENTIAL ISSUES IN JOINING MMC'S

2.1 Solidification Effects

In general, MMC's utilize a variety of nonmetallic reinforcements with a typical volume fraction ranging from 5 to 60 percent. For this reason, there are several potential joining issues that are peculiar to MMC's such as the solidification effects. Since most nonmetallic reinforcements have different densities from the metal matrix, this can lead to pronounced particle segregation effects when the matrix is in the molten state. Below a certain critical solidification temperature, reinforcements can be pushed ahead of the solidification front, resulting in nonuniformity of the reinforcement in the weld region. Under the molten state, the composite metal weld pool generally has a higher viscosity and does not flow as well as the unreinforced metal matrix. High viscosity can often lead to a lower heat transfer by convection mechanism in the weld pool, which can affect the resulting microstructures and the stress distributions in the MMC's. Solidification effects are difficult to control and commonly encountered in most fusion welding techniques. Solidification problems may result in dissolution of the reinforcements and nonuniform packing density due to the migration of the reinforcement into the weld regions. Most conventional fusion welding techniques such as arc welding, electron-beam welding, and laser-beam welding can fundamentally be considered as miniature castings with different boundary conditions and complex solidification effects.

2.2 Chemical Reactions

In the past, there were some fusion welding techniques that have been used with moderate success on some types of particulate reinforced MMC's. However, the major difficulty with fusion welding for MMC's is that prolonged contact between a molten-metal matrix and particulate reinforcements can lead to undesirable chemical reactions. For instance, liquid phase Al will react with SiC reinforcement to precipitate the aluminum carbide (Al_4C_3) and increase the silicon (Si) content upon cooling down the molten metal matrix. Similarly, carbon or graphite will react with Al or certain types of metal matrices at high processing temperatures to form detrimental phases. In the presence of moisture, metal carbides can decompose with the release of hydrocarbon gases and increase the joint susceptibility to corrosion cracking and joint strength degradation. Consequently, the chemical compatibility of the metal to reinforcement for a specific joining method is material and process specific. Most fusion processes are high thermal energy processes that are not easily applied to MMC's. For example, experimental data suggested that the laser energy is preferentially absorbed by most nonmetallic reinforcements in the very narrow weld regions of high heat flux. Therefore, fusion welds must be automated with high welding speed and temperature control in order to reduced undesirable chemical reaction.

2.3 Joint Preparation

Because of their nonmetallic reinforcements, MMC's tend to have low ductility; high surface-wear resistance; and high brittleness to machine, cut, or drill using standard steel cutting tools and saw

blades. Most MMC's with high reinforcement volume ranging from 40 to 60 percent will behave more like ceramic than monolithic metals and can become difficult to cut or machine. In preparation for an MMC joint prior to welding, the cutting and drilling parameters such as speed and force must be carefully controlled in order to avoid composite panel tearout or crack. To avoid excessive tool wear, it is a common practice for diamond- or diamond-like-coated steel tools to be employed for MMC's.

2.4 Qualitative Performance Rating

Figure 1 shows that the major joining methods for MMC's can be classified into three main groups: (1) Solid state, (2) fusion, and (3) other processes. Presently, it is important to realize that the joining technology is not mature for MMC's, and many important joining technical details are still lacking.[1] Consequently, the precise knowledge of the adaptability of a specific joining method, including FSW in this study, is a specific material and process-dependent factor which must be determined experimentally. As a general rule, the adaptability of any joining techniques for MMC's will depend on the combination of the following factors: (1) The volume percent amount and types of reinforcements, (2) the metal matrix melting point, and (3) the thermal energy management from the selected joining process. A brief summary of these three factors is given as follow:

- Since MMC's utilize a variety of nonmetallic reinforcements, the higher the reinforcement volume fraction, the less likely for standard metal joining techniques to adapt. Discontinuously reinforced MMC's are easier to join than continuously reinforced MMC's using fibers which are prone to matrix fiber debonding, delamination, nonuniform fiber packing density, and migration of fibers bundled into the weld regions.

- The prolonged contact time between a molten-metal matrix and a reinforcement can lead to undesirable chemical reactions that are accelerated as the molten-metal temperature increases. Therefore, the metal matrix reinforcement chemical compatibility is a material- and temperature-dependent factor. For this reason, the higher the metal matrix melting temperature, the less likely most of the fusion techniques are to adapt.

- Although high thermal energy is required for most conventional joining processes, excessive thermal energy input is undesirable. Therefore, the use of an automated joining process or a special joining method that can offer a well-controlled, thermal-energy input in a minimum process time will likely improve the joining adaptability for MMC's.

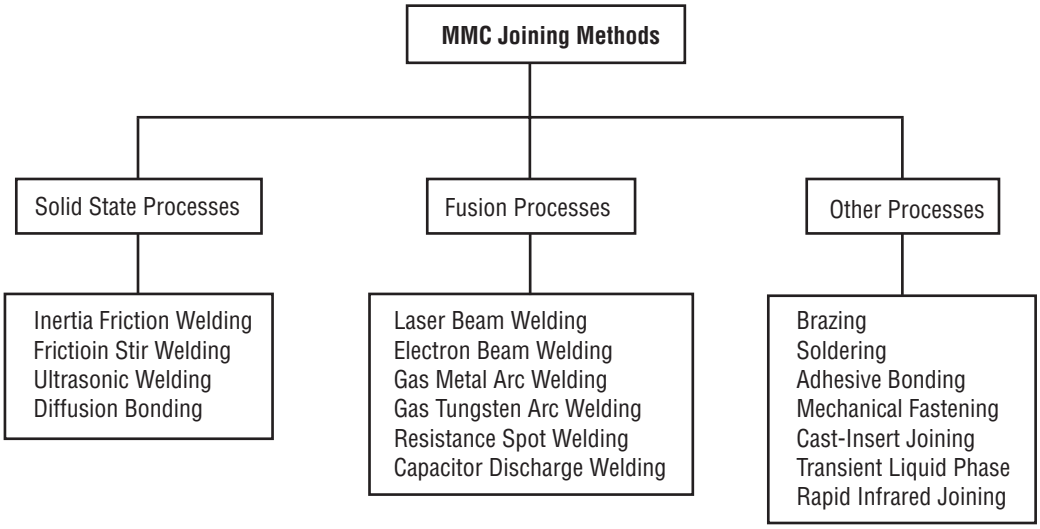

Figure 1. Classification of selected joining methods for MMC's.

3. FRICTION STIR WELDING OF Al 6092/17.5 SiCp/T–6 MMC's

3.1 Background

FSW is a relatively new joining process that was originally developed and patented by The Welding Institute (TWI) of Cambridge, England.[2] Since 1993, FSW has been studied and demonstrated by many researchers.[3–5] However, FSW can best be described in conventional terms as a combination of extrusion and forging of metals at elevated temperatures. The process is considered as a solid state process, and it does not require the need for gas shielding or filler metals.

Figure 2 is a schematic describing the FSW process. FSW consists of a rotating and nonconsumable pin tool that is slowly plunged into the bond line until the pin tool's shoulder is in intimate contact with the workpiece. As the tool rotates and moves forward along the bond line, the material at the bond line begins to heat up, forcing it to flow around the rotating tip to consolidate on the pin tool's backside. This heat source is developed mainly due to the local friction and plastic deformation while keeping the pin tool's shoulder in intimate contact at all times with the workpiece. The workpieces must be securely clamped to a backing anvil in a manner that prevents them from moving and being forced apart at the abutting joint faces. Interestingly, FSW has the potential for welding MMC's because the processing temperature occurs well below the metal's melting point, thereby eliminating the solidification defects and undesirable chemical reactions. However, as with all welding processes, FSW has its advantages and disadvantages which will be briefly reviewed in this study.

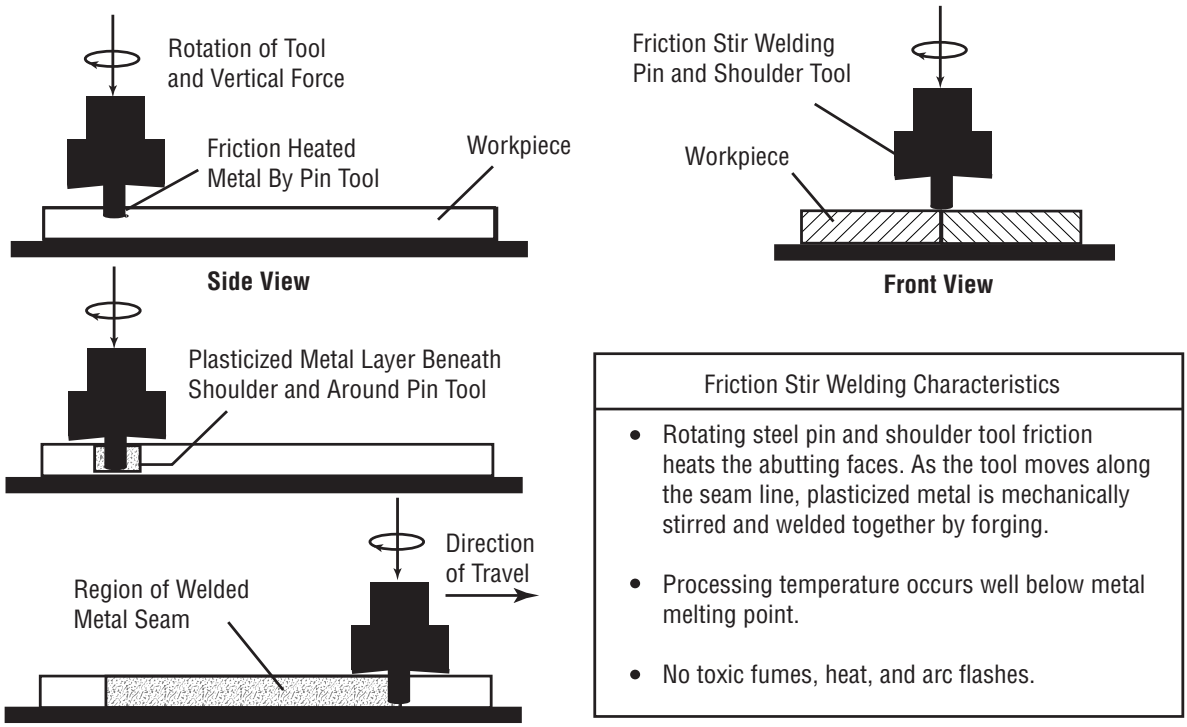

Figure 2. Schematic drawing of FSW process.

3.2 Experimental Procedures

The pin tools used were specifically designed for this study to accommodate the 0.125-in.-thick plates, and the tool length can be manually adjusted for variation in plate thicknesses prior to welding. As shown in figure 3, the tools had a 0.475-in.-diameter shoulder and 10–24 unified coarse left-handed threads on the pin. A computer simulation was used to determine the optimum pin tool length of 0.120 in. for making an optimum full-penetration weld. This pin tool was independently designed by Robert Carter, the Co-Principal Investigator, and does not contain proprietary design information.

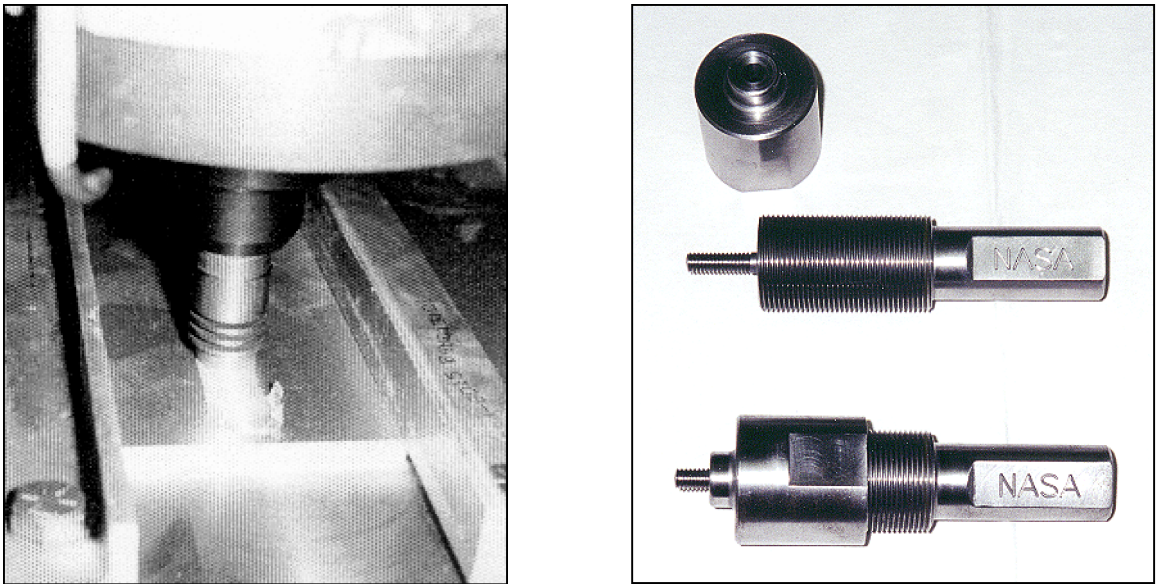

Figure 3. FSW in action and the pin tool's geometric design.

Due to the highly abrasive nature of this particular MMC, excessive pin tool wear was expected. For this reason, two sets of pin tools having identical geometry but different wear-resistant coating were applied. Both sets were fabricated from H–13 tool steel that was heat treated to 53–55 Hardness Rockwell "C" (HRC) scale. One set was then coated with B_4C to achieve a surface hardness value of 93–95 HRC. The other tool set was left uncoated. The B_4C was chosen as a coating due to its potential for outstanding wear resistance, superior lubricity, good corrosion, and chemical resistance. The coating was applied using a low-temperature, low-cost process. Figure 4 shows a hardness comparison of several coating materials that were considered for this study. Furthermore, B_4C coating was chosen for the initial trials due to its low cost factor.

As shown in figure 3, FSW was performed using the Kearney & Trecker five-axis horizontal computer numerical control milling machine that was modified for FSW. After welding, the panels were x-rayed, and root side die-penetrated tests were performed. The welded panels were then cut and machined into tensile specimen coupons and microstructure analysis specimens. The specimens were tensile tested in as-welded conditions and in post heat-treated T6 conditions. The T6 condition specifications were recommended by the manufacturer and consisted of solution heat treating at 1,030 °F for 3 hr, then water quenching. It was followed by age hardening at 325 °F for 8 hr and then air cooled.

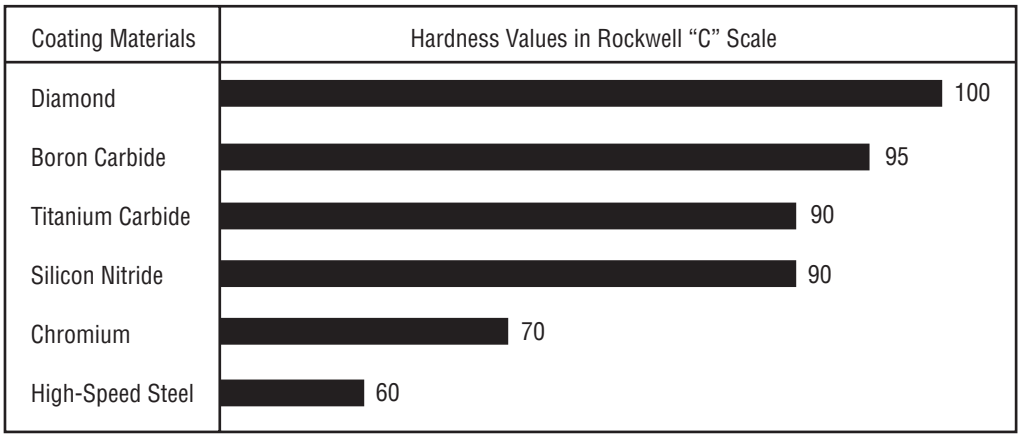

Figure 4. Comparison of hardness values for candidate coating materials.

The MMC material used in this study was a 6092 Al alloy reinforced with 17.5-percent SiC particulate which is homogeneously distributed throughout the matrix. The material was supplied by DWA Aluminum Composites, Inc., Chatsworth, CA, in the form of 6×12×0.125-in. plates with T6 heat treatment condition prior to welding. Table 1 shows the chemical compositions of 6092 Al alloy, and table 2 shows some of the physical and mechanical properties which were provided by the material supplier,[6] DWA Aluminum Composites, Inc.

Table 1. Chemical compositions of 6092 Al alloy as the matrix material.

Element	Compositions (wt. %)
Silicon	0.4–0.8
Magnesium	0.8–1.2
Copper	0.7–1.0
Manganese	0.15 (max.)
Chromium	0.15 (max.)
Zinc	0.25 (max.)
Titanium	0.15 (max.)
Iron	0.3 (max.)
Oxygen	0.05–0.5
Aluminum	Balance

Table 2. Typical properties of 6092 Al reinforced with 17.5-percent SiC particulate.

Property	Value/Description
Material Descriptor	6092/SiC/17.5p–T6
Reinforcement Type	17.5% SiC Particulates
Density (lb/in^3)	0.101
Ultimate tensile strength (ksi)	67
Yield strength (ksi)	57
Elongation (percent)	8
CTE (ppm/F)	9.3
Hardness (Rockwell "B")	82
Temper	T–6

Table 3 lists the FSW parameters and their description that were experimentally developed for this study to yield sound welds. These parameters were used as guidelines for FSW of MMC's. It should be noted that these parameters were chosen for a feasibility study and have not been fully optimized. Tool wear was monitored by measuring pin tool dimensions before and after each weld. The uncoated tools were used in the beginning of the study to develop acceptable welding parameters and to generate data using the chosen set of parameters. The B_4C-coated tools were used in the latter part of this study to generate data using the chosen parameters.

Table 3. Empirical parameters developed for FSW of MMC's.

FSW Parameters	Value	Description
Travel speed	4 ipm	Inch-per-minute horizontal speed
Rotating speed	1,350 rpm	Rotating speed of pin tool
Lead angle	2.5 deg	Pin tool's tilting angle from vertical plane
Plunge depth	0.010 in.	Shoulder length plunges below crown side
Penetration ligament	0.005 in.	Distance between tip of pin and backing anvil

3.3 Results

3.3.1 Microstructure Analysis

No evidence of cracking was found within the cross-sectional view of the welds as observed by optical microscopy at × 400. However, visual inspection easily revealed that the crown side (top side) of the welds was quite coarse. In comparison with monolithic alloys, the crown side of a typical FSW in an Al alloy has a highly polished, machined appearance. The welds performed with MMC material consistently gave the crown side a unique appearance that is reminiscent of what one would expect to see for a typical surface of concrete. This coarse appearance was caused by the fact that the SiC particles did not adhere well with the Al at the surface of the weld adjacent to the tool shoulder. It was noticed that the anomaly was partially overcome with the use of B_4C-coated tools which had a higher hardness and a lower lubricity, allowing the material to coalesce much better. However, after only a few inches of welding, the SiC particles were already beginning to wear the B_4C off the outer edge of the tool shoulder. Once the coating was worn off, the coarseness reappeared. This coarseness appeared to be only a surface anomaly and did not seem to have any significant influence on the tensile properties. Figure 5 shows the cross-sectional view of an FSW joint using an uncoated pin tool.

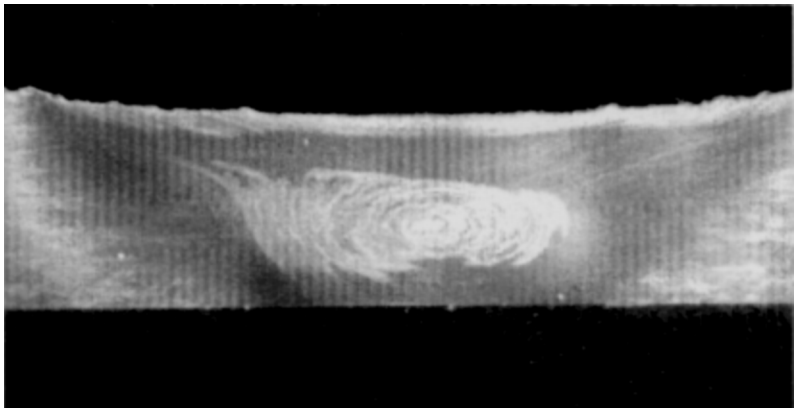

Figure 5. Cross-sectional view of an FSW joint for MMC's (× 10).

It was noticed that on the root side of some MMC welds, occasionally some panels were actually "stuck" to the backing anvil after being welded. This phenomenon occurred when the material directly beneath the pin and adjacent to the backing anvil became welded to the anvil due to the heat and extreme pressure created by the welding process in this zone. Observations of intermittent "craters" on the root side indicated places where material "stuck" to the backing anvil when the workpiece was removed. Such small craters were identified using a conventional die-penetrated technique, and these defects appeared to be very shallow surface defects which may not significantly influence the mechanical properties of the welds. Figure 6 shows an interesting microstructure at the edge of the HAZ at × 400. Evidently, the SiC particles were broken up by the pin tool and became smaller as they traveled toward the center of the HAZ. Also, there was a lack of high-volume particle concentration at the edge of the HAZ.

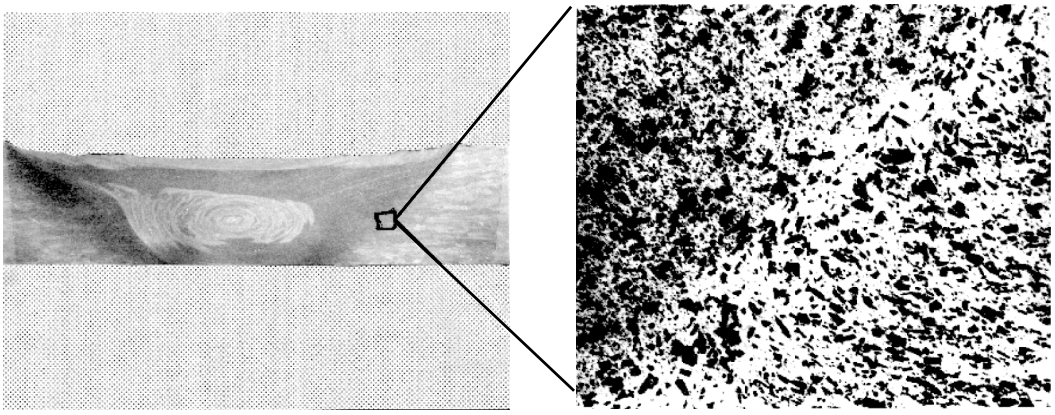

(a) Cross-sectional view of FSW joint (Magnification: × 4). (b) Microstructure of FSW joint (Magnification: × 400).

Figure 6. Change in SiC particle sizes and distribution at the HAZ's edge boundary.

3.3.2 Tensile Strength Measurements

In order to access the joint efficiency of these MMC welds, tensile strength was measured and the joint efficiency was calculated as follows. Using the uncoated tool, the average ultimate tensile strength (UTS), measured at room temperature, was 41.4 ksi when tested in the as-welded condition. Tensile strength of 54.7 ksi was obtained when tested after heat treatment and age hardening back to the original T6 condition. The average UTS of welds performed with B_4C coated tools was 43.3 ksi when tested in the as-welded condition and 61.9 ksi when tested in the postheat-treated T6 condition. Tables 4 and 5 show the tensile data for FSW of MMC panels using an uncoated and coated pin tool, respectively. To evaluate the joint efficiency, the parent material's UTS was experimentally determined to be ≈60 ksi. It was noted that this value is ≈10 percent less than the UTS value reported in the literature. From the experimental value of 60 ksi, the joint efficiency of 61–72 percent was achieved in the as-welded condition and 92–100 percent after heat treatment. In general, coating the pin tool does not seem to alter the joint efficiency in comparison with an uncoated pin tool.

Table 4. MMC joint strength results using uncoated pin tool.

Joint Property	As-Welded	Heat Treated
Modulus (Msi)	11.13	12.28
Yield strength (ksi)	27.7	49.1
Tensile strength (ksi)	41.4	57.7
2-in. elongation (%)	2.49	2.07

Table 5. MMC joint strength results using B_4C-coated pin tool.

Joint Property	As-Welded	Heat Treated
Modulus (Msi)	10.44	12.83
Yield strength (ksi)	27.4	55.1
Tensile strength (ksi)	43.5	61.9
2-in. elongation (%)	2.72	2.00

3.3.3 Hardness Measurements

Hardness measurement was taken across the crown side of the weld zone as shown in figure 7. These welds were performed with B_4C-coated pin tools. From the hardness measurement, it was concluded that the yield and tensile strengths were also reduced greatly in the HAZ by overheating due to the FSW process. In general, coating of the pin tool does not seem to alter the HAZ hardness measurement profile in comparison with an uncoated pin tool. Although thermal energy is required for most joining processes, it becomes obvious that any excessive thermal energy input is undesirable, including FSW in this study.

3.3.4 Pin Tool Wear

The pin tool's wear was found to be most significant on the outer edge of the tool shoulder and on the major diameter of the pin's thread form. On the average, ≈0.0005 in. of material was removed from the tool shoulder per linear foot of weldment, and the pin diameter was reduced by 0.010 in./ft of weld. This wear was manageable without manual pin tool length adjustment for weldment of ≈5 ft or less. In other words, for every 5 ft of welds, the pin tool's length must be removed from the welding head and manually adjusted for the next weld session.

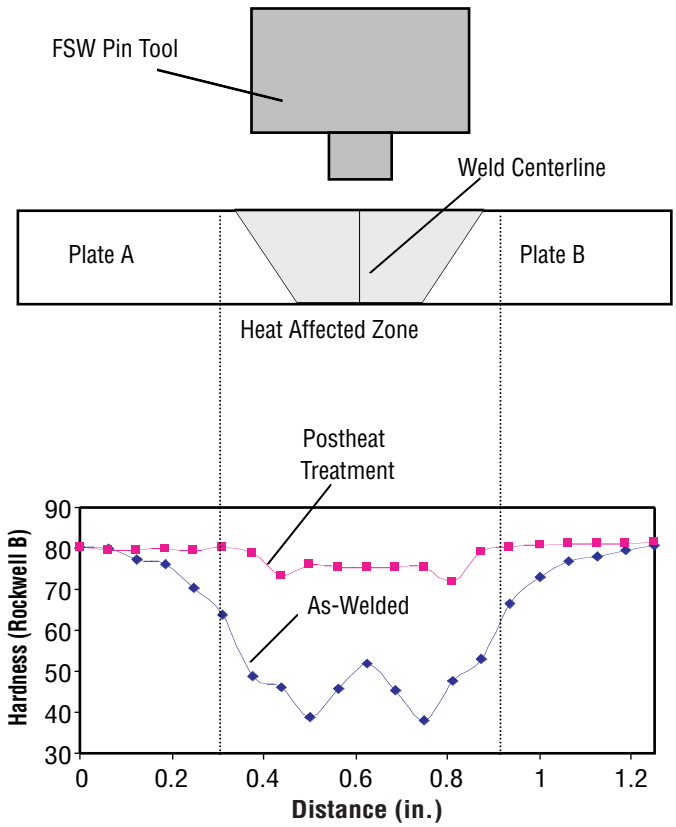

Figure 7. Hardness measurement across the HAZ.

4. FSW OF FUNCTIONAL GRADIENT Al MMC TO Al-Li 2195

4.1 Background

Previous studies of several methods of joining MMC's have shown that the higher the reinforcement volume fraction the less likely for standard metal joining techniques to adapt.[7] Therefore, in order to increase the joining adaptability by decreasing the reinforcement at the bond line, a unique joining method was developed which was somewhat similar to the cast-insert joining (CIJ) technique as listed in figure 1. The CIJ is a method of near net- shape casting of MMC components with built-in metallic inserts or metallic-like materials to provide a site joining with another metal or MMC using any conventional joining technique.[8]

Using the CIJ concept, several MMC plates were produced through the near net-shape pressure infiltration process, with low reinforcement volume fraction using thin strips of "insert" material along the welding edges of the plate as shown in figure 8. These FGM MMC plates contain up to ≈50-percent SiC particulate reinforcement by volume which is uniformly distributed everywhere except near the edges of the plate. Along these edges, the reinforcement concentration level can be made to drop to 5, 18.5, and 27 percent by using a special ceramic preform material called Saffil paper with a typical thickness of 0.25 in. One of the objectives of this project was to investigate the feasibility of FSW these FGM plates to Al-Li 2195.

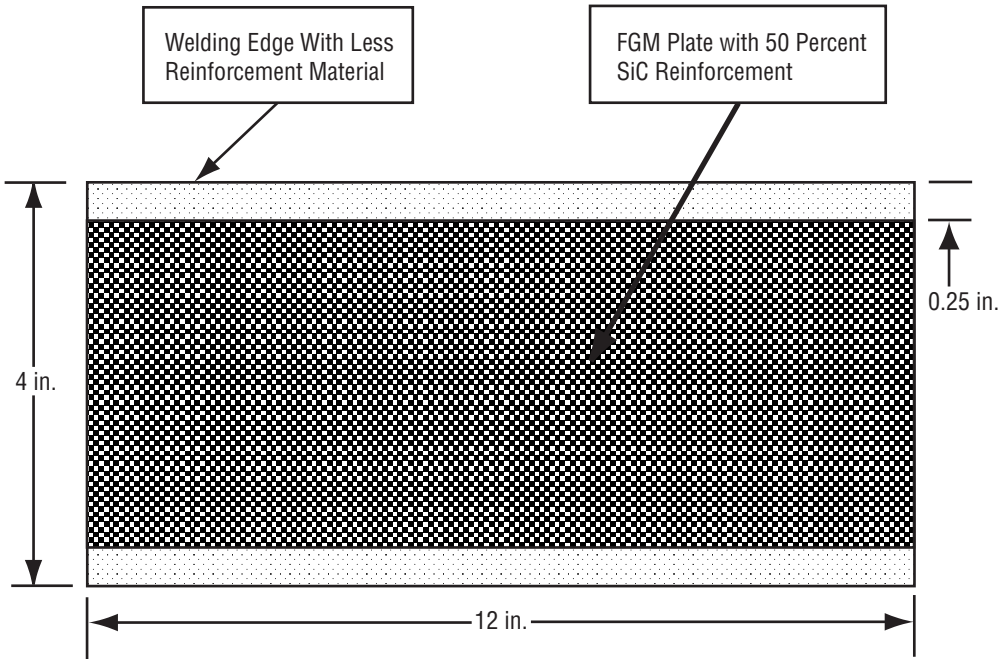

Figure 8. Development of FGM for MMC plates.

4.2 Experimental Procedures

4.2.1 Pin Tool Geometry

From the previous study of FSW of 0.125-in.-thick MMC plates reinforced with 17.5 percent SiC particulate, a slight modification for the pin tool geometry was performed. All pin tools were threaded with a unified fine 20-pitch, left-handed thread with a nominal length of 0.230 in. The pin tool's shoulder diameter was 0.738 in.

4.2.2 Welding Parameters

The nominal material thickness for all welds made was 0.250 in. The initial welding parameters were developed based on FSW of Al-Li 2195 to Al-Li 2195 plates with identical thicknesses of 0.250 in. By trial and error, a set of welding parameters developed for welding 2195 to 2195 were given as follows: Spindle speed—700 rpm, travel speed—4 ipm, and shoulder plunge depth—0.010 in.

4.3 Results

4.3.1 Welding Trial No. 1 (2195 to 50-Percent SiC FGM With 5-Percent Saffil Edge)

This weld was initiated using the parameters developed for welding 2195 to 2195. It was observed that the weld was not "hot" enough, and the transverse travel speed was reduced from 4 to 3.4 ipm at ≈3.5 in. into the weld in order to increase heat input and promote weld quality. Visual inspection of this weld from the crown side (top side) appeared to be of good quality. However, the pin tool shoulder did not plunge far enough into the material, because of the unexpected high wear-resistant property and stiffness values from the MMC plate. It is expected that a slight adjustment of the pin tool length and plunge depth would overcome this typical problem.

4.3.2 Welding Trial No. 2 (2195 to 50-Percent SiC FGM With 18.5-Percent Saffil Edge)

Based on the results of welding trial No. 1, new parameters were adjusted and given as follows: Spindle speed—700 rpm, travel speed—3.5 ipm, and shoulder plunge depth—0.015 in. Visual inspection of this weld from the crown side appeared to be of very good quality. Figure 9 is a photograph showing the result of this welding trial.

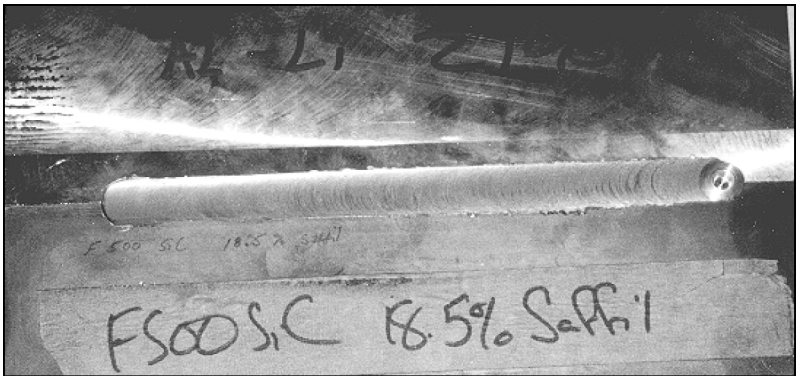

Figure 9. FGM with 18.5-percent edge reinforcement welded to Al-Li 2195.

4.3.3 Welding Trial No. 3 (2195 to 50-Percent SiC FGM With 27-Percent Saffil Edge)

This weld was performed based on the same parameters used in weld No. 2. The beginning of the weld had an excessive material loss due to "flash." This was caused by excessive heat input to the 2195 side of the weld and resulted in a lack of material consolidation. The speed was increased from 3.5 to 4 ipm at 1.5 in. into the weld in order to reduce the heat input to the 2195 side. At 6 in. into the weld the pin tool broke off due to excessive loading force. It was speculated that this situation was caused by a mismatch in the ductility or plastic zone side due to the difference in forging temperature and thermal conductivity between the MMC and the 2195 material. Indeed, previous experiments performed at Marshall Space Flight Center (MSFC) for FSW of Al to copper (Cu) were not successful. Therefore, as dissimilar material properties become more diverse, it will become very difficult to perform a sound FSW.

4.3.4 Welding Trial No. 4 (2195 to 50-Percent SiC With No FGM)

This weld was performed using the same parameters as weld No. 2. The weld was unsuccessful due to very high reinforcement volume at the welding edge of the plate. In this weld the pin broke off after only 1.5 in. of weld. Another trial was performed with a similar result: the pin tool broke off again after <1 in. of weld. It is speculated that with the 50-percent SiC reinforcement, there is a large mismatch in the plastic zone size between the MMC and 2195 material, thus making this weld nearly impossible. Similarly, a previous experiment performed at MSFC for FSW of Al to Cu was not successful due to the same reasons. Therefore, as stated in the paragraph above, as dissimilar material properties become more diverse, it will become very difficult to perform a sound FSW. Figure 10 is a photograph showing the result of this unsuccessful welding trial without FGM.

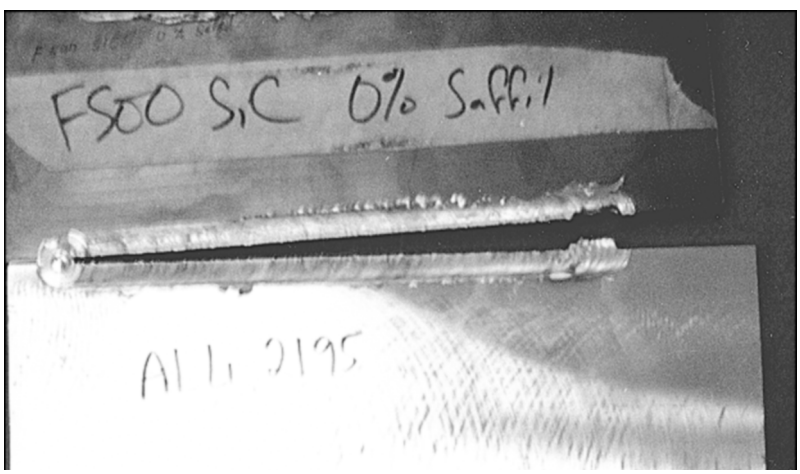

Figure 10. Unsuccessful welding of 50-percent SiC MMC plate to Al-Li 2195.

5. TECHNOLOGY ASSESSMENT AND POTENTIAL APPLICATIONS

5.1 Performance Limitations of FSW

As with all welding processes, FSW has specific advantages and limitations for MMC's, as listed in table 6. The FSW process may be considered as a joining method that utilizes a combination of extrusion or forging of metals at elevated temperatures. Therefore, as dissimilar material properties become even more diverse, it will become more difficult to perform a sound FSW.

Table 6. FSW advantages and limitations for joining MMC's.

Advantages
Operate below melting point to prevent undesirable chemical reactions No solidification defects between reinforcement and metal Perform at ambient conditions with no toxic fumes Minimum shrinkage, distortion, and residual stress Simple control process without gas shielding or filler material
Performance Limitations
Process portability is limited by the need for heavy and large backing anvil Pin-tool wear may be severe for MMC with reinforcement of >20 percent Sound weld for Al MMC to 2195 Al alloy limited to reinforcment of <25 percent Limiting joint strength to <65 percent due to high processing temperature Welding MMC flat plate or large curvature surface only

The adaptability of FSW or any of the solid state joining techniques for MMC's will depend on the volume percent amount, the types of reinforcements, and the thermal energy input from the joining process. In this study, it was found that the FSW process for MMC's was limited to ≈25-percent SiC by volume fraction. Above this value, pin tool wear resistance may become too severe. Most importantly, it was found that a higher material properties mismatch between the MMC and the monolithic alloy to be welded would make FSW very difficult to apply. The thermal energy created by the FSW process was also high enough that the yield and tensile strengths were also reduced greatly in the HAZ. Historically, FSW is applicable mainly for butt joining of flat plates. Therefore, FSW of cylindrical articles (e.g., a flange to a duct) with diameters ranging from 2–5 in. must be fully demonstrated and compared with other conventional joining techniques as described in figure 1.

5.2 Potential Applications for MMC Flanges

5.2.1 Potential Applications

There are several MSFC ongoing activities in the development of MMC's for advanced liquid rocket engines such as the X–33 vehicle's Aerospike and X–34's Fastrac engine.[9] In most of these MMC

applications, it was found that FSW either cannot be applied efficiently or will not be required, with the exception of the potential application of joining an MMC flange to an Al duct. Figure 11 shows the state-of-the-art fuel line flanges which are made with Al MMC's reinforced with 50-percent SiC or B_4C particulate. For reference, these typical flanges are 1.90 in. high and have a 6.5-in. outside diameter with a 4-in.-diameter port hole. Each of these MMC flanges would weigh ≈913 g. The future fuel line duct is proposed to be either Al-Li 2195 alloy or the nanophase Al (NPA) alloy. For this reason, the feasibility of FSW of MMC plates to Al 2195 plates was investigated in this study as a preliminary assessment of FSW of MMC flanges to Al ducts. It was found that FSW was fairly good when the MMC contained <25-percent reinforcement and it was nearly impossible to weld when the reinforcement value reached 50-percent volume fraction.

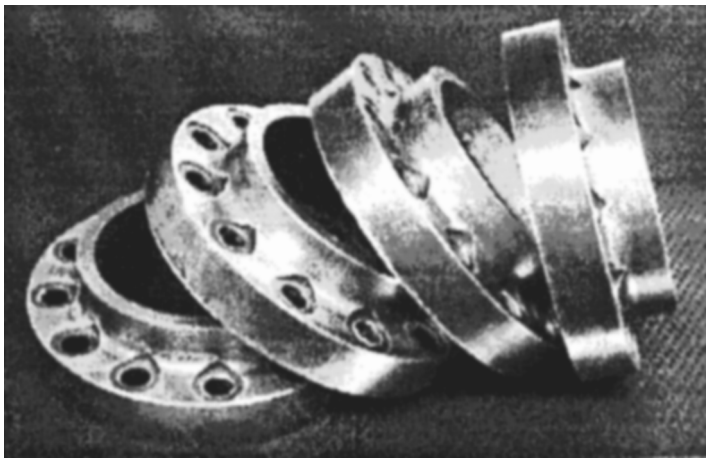

Figure 11. MMC flanges reinforced with 50-percent SiC particulate for fuel line system.

5.2.2 Functional Gradient Material

One innovative method to improve the joining process for the MMC flanges is to develop them with FGM features in order to reduce the volume fraction at the bond line. These FGM flanges as well as the FGM flat plates are currently being made under a Small Business Innovative Research (SBIR) phase 2 contract for MSFC with Metal Matrix Cast Composites, Inc., Waltham, MA. These FGM articles are produced through a net-shape, pressure-infiltration process with low reinforcement volume using thin strips of "insert" material along the welding edges. Along the bond lines, the reinforcement volume level can be made to drop from 50 percent to 27, 18.5, and 5 percent by using a special ceramic preform material layer called Saffil. Most importantly, FGM technology may allow other joining methods to be used more effectively than FSW for joining of MMC flanges.

5.3 Other Potential Joining Techniques for MMC Flanges

It is speculated that if FGM is applied for the development of MMC's, it may allow other joining methods to be used in addition to FSW for MMC flanges. Historically, FSW is applicable mainly for butt joining of flat plates. However, cylindrical articles having small diameters of <2–5 in. have not been fully demonstrated. There are several solid state and fusion welding techniques that may be applied for FGM of MMC flanges, depending on the duct's material and performance requirements. If the ducts are

made from NPA, then only solid state welding techniques can be applied to maintain a low processing temperature for NPA. If the ducts are made from an Al-Li alloy such as 2195, then fusion welding processes may be used, depending on the flange design and requirements. Suggestions for solid state welding techniques which may be applicable for MMC flanges are inertia friction welding (IFW) and diffusion bonding. Suggestions for fusion processes are listed as gas metal arc welding (GMAW), gas tungsten arc welding (GTAW), and resistance spot welding (RSP). These welding techniques are capable for welding either flat plates or cylindrical articles that have a small radius of curvature. In this study, a literature survey for welding MMC cylindrical articles revealed that IFW and GMAW were used successfully in the past for welding of cylindrical MMC components to monolithic alloys. Therefore, a summary of the potential welding techniques that may be applicable for NASA's applications are shown below.

5.3.1 Inertia Friction Welding

Interestingly, IFW has proven very successful in the past for making sound MMC joints for cylindrical objects that have a small radius.[10–12] It was noted that some of the welds between MMC and monolithic Al could exhibit an excellent room-temperature joint strength of 83 percent of the value of the composite base material. Yield strength values in cross-weld tensile of up to 90 percent of parent material value have been obtained by IFW. In fact, the cylindrical geometry of the duct and flange to be mated would directly allow the use of this technique with potentially very little preparation and no special tooling. Basically, the method is simply described as making one workpiece to be rotated and keeping the other stationary. Then, the two workpieces are brought together under a compressive contacting force to form a solid state weld. IFW has been widely used for joining dissimilar materials and exhibits several important characteristics that make it a viable candidate for welding MMC flanges and ducts.

5.3.2 Gas Metal Arc Welding

This fusion welding process can be used for low volume reinforcement of MMC. Experimental results from Alcan International have shown that it was possible to weld 4-in.-diameter (10-cm) MMC driveshafts to monolithic Al yokes for automotive applications.[13–15] It was noticed that the MMC material at 20-percent Al_2O_3 reinforcement was much easier to weld than the unreinforced Al, because this type of reinforcement made the weld pool more viscous. Furthermore, demonstration of several seamless tubes with wall thicknesses of 2 mm (0.08 in.) were successfully welded to forged 6061 Al yokes. The GMAW process with 5356 Al filler wire was used in the standard driveshaft MMC assembly fixtures for full-scale component demonstration.

6. CONCLUSIONS

FSW can be applied for discontinuously reinforced MMC's when the reinforcement is <25 percent by volume. Above this level, FSW is difficult to apply due to the material's high brittleness, high wear resistance, high stiffness, low ductility, high forging temperature, and low thermal conductivity. For similar reasons, previous FSW experiments performed at MSFC for Al to Cu were not successful.

The pin tool's wear was found to be excessive, even when reinforcement was limited to 17.5 percent SiC by volume, such that the pin tool's length had to be manually adjusted for every 5 ft of weld. However, higher tool wear resistance for future materials such as tungsten-carbide, etc., must be able to be machined and may require high fracture toughness to prevent the pin tool from breaking off due to excessive welding force.

In this study, cost-effective B_4C coating did not work for the H–13 steel tool to prevent pin tool wear against MMC's. High processing cost but potentially better wear-resistance coating materials such as diamond and diamond like materials may need further investigation for FSW.

FSW has shown to release an excessive amount of thermal energy for welding MMC. Evidently, a softening in the HAZ was observed for all of the welds in this study, which is one of the major limiting factors for joint strength. The joint efficiency of 65 percent was achieved in the as-welded condition for 6092/SiC/20p–T6.

Historically, FSW is applicable mainly for butt joining of flat plates and of curved plates that have a large radius of curvatures. It is speculated that below certain small values for radius of curvature FSW may become very difficult to apply, in particular for small circular MMC flanges to cylindrical metal ducts.

If FGM is utilized for the development of MMC's, it may allow other joining methods to be used in addition to FSW for MMC flanges. A literature survey suggested that there are other potential welding techniques for MMC flanges such as the IFW and GMAW. In particular, IFW has been used successfully for welding small cylindrical MMC components such as tubes and driveshafts for automotive applications.

7. RECOMMENDATIONS

It is recommended that FGM be developed as a method to reduce the reinforcement volume at the bond line in order to improve the joining processes for MMC flanges. FGM is an innovative material approach that could allow other potential MMC joining methods to be used more effectively than FSW, particularly for joining small cylindrical objects such as MMC flanges, ducts, and tubes with practical diameters ranging from 2 to 5 in.

It is recommended that IFW, GMAW, GTAW, and RSP be developed for joining of MMC flanges and ducts. These welding techniques are capable of welding cylindrical articles with a small radius of curvature. A literature survey for welding MMC cylindrical articles revealed that IFW and GMAW were used successfully and extensively in the past for welding cylindrical MMC components such as driveshafts and thin-walled tubes to monolithic alloys.

It is recommended that higher pin tool wear-resistant materials or coatings be developed for MMC's with >25-percent reinforcement. However, high wear-resistant pin tool materials must also exhibit the ability to machine well and have good fracture toughness to prevent breaking off under high FSW welding force.

It is recommended that FSW of cylindrical articles such as MMC flanges to Al ducts, with realistic NASA propulsion hardware applications for practical diameters ranging from 2–5 in., be fully demonstrated and compared with other proven MMC joining techniques for cylindrical articles.

REFERENCES

1. Lee, J.A.: "Section: 1.2.8.4 Joining Methods for MMC," In: *Metal Matrix Composite Handbook*, to be published by the Department of Defense.

2. Thomas, W.M.; et al.: "Friction Stir Welding," U.S. Patent 5,460,317.

3. Dawes, C.J.; and Thomas, W.M.: "Friction Stir Process Welds Aluminum Alloys," *Welding Journal*, pp. 41–45, March 1996.

4. Midling, O.T.; "Material Flow Behavior & Microstructural Integrity of Friction Stir Butt Weldments," Fourth Inter. Conf. Aluminum Alloys, pp. 451–458, September 1994.

5. Rhodes, C.G.; Mahoney, M.W.; et al.: " Effects of Friction Stir Welding on Microstructure of 7075 Al," *Script. Metall.,* Vol. 36, pp. 69–75, 1997.

6. Database provided by Mark van den Bergh from DWA Aluminum Composites, Inc.

7. Lee, J.A.: "Technology Assessment of Commercial Joining Techniques for MMC, " 21st Conf. on Composites, Materials and Structures, Cocoa Beach, FL, January 27–31, 1997.

8. Lee, J.A.; and Kashalika, U.: "Casting of Weldable Gr/Mg MMC with Built-in Metallic Inserts," NASA Conf. 3249, Vol. 1, p. 371, Anaheim, December 7–9, 1993.

9. Lee, J.A.: "Potential Applications of Al MMC for NASA's Advanced Propulsion Systems," 23rd Conf. on Composites, Materials and Structures, Cocoa Beach, FL, January 25, 1998.

10. Gittos, M.; and Threadgill, P.: "Joining Aluminum Alloy MMC," Bulletin 5, *TWI J.*, pp. 104–105, September/October 1992.

11. Ahearn, J.S.; and Cooke, D.C.: " Joining Discontinuous SiC Reinforced Al Composites," Martin Marietta Co., Report: NSWC–TR–86–36, September 1, 1985.

12. Cola, M.J.; et al.: "Inertia Friction Welding of Aluminum 6061–T6/Al_2O_3 MMC," *Research Report MR9108*, Edison Welding Institute, June 1991.

13. Altshuller, B.; Christy, W.; and Wiskel, B.: "GMA Welding of Al-Alumina MMC," *Weldability of Materials, ASM International*, pp. 305–309, Materials Park, OH, 1990.

14. Lienert, T.; Lane, C.; and Gould, J.: "Selection and Weldability of Al MMC," *ASM Handbook,* Vol. 6*,* pp. 555–559, Materials Park, OH, 1995.

15. Schwartz, M.M.: "Joining of Composite Matrix Materials," *ASM International*, pp. 98–100, Materials Park, OH, 1995.

REPORT DOCUMENTATION PAGE

Form Approved
OMB No. 0704-0188

Public reporting burden for this collection of information is estimated to average 1 hour per response, including the time for reviewing instructions, searching existing data sources, gathering and maintaining the data needed, and completing and reviewing the collection of information. Send comments regarding this burden estimate or any other aspect of this collection of information, including suggestions for reducing this burden, to Washington Headquarters Services, Directorate for Information Operation and Reports, 1215 Jefferson Davis Highway, Suite 1204, Arlington, VA 22202-4302, and to the Office of Management and Budget, Paperwork Reduction Project (0704-0188), Washington, DC 20503

1. AGENCY USE ONLY *(Leave Blank)*	2. REPORT DATE	3. REPORT TYPE AND DATES COVERED
	December 1999	Technical Memorandum

4. TITLE AND SUBTITLE
Friction Stir Welding for Aluminum Metal Matrix Composites (MMC's)
(MSFC Center Director's Discretionary Fund Final Report, Project No. 98–09)

5. FUNDING NUMBERS

6. AUTHORS
J.A. Lee, R.W. Carter, and J. Ding

7. PERFORMING ORGANIZATION NAMES(S) AND ADDRESS(ES)
George C. Marshall Space Flight Center
Marshall Space Flight Center, Alabama 35812

8. PERFORMING ORGANIZATION REPORT NUMBER
M–953

9. SPONSORING/MONITORING AGENCY NAME(S) AND ADDRESS(ES)
National Aeronautics and Space Administration
Washington, DC 20546–0001

10. SPONSORING/MONITORING AGENCY REPORT NUMBER
NASA/TM—1999–209876

11. SUPPLEMENTARY NOTES
Prepared for Materials Processes and Manufacturing Department, Engineering Directorate

12a. DISTRIBUTION/AVAILABILITY STATEMENT
Unclassified-Unlimited
Subject Category 29
Nonstandard Distribution

12b. DISTRIBUTION CODE

13. ABSTRACT *(Maximum 200 words)*

This technical memorandum describes an investigation of using friction stir welding (FSW) process for joining a variety of aluminum metal matrix composites (MMC's) reinforced with discontinuous silicon-carbide (SiC) particulate and functional gradient materials. Preliminary results show that FSW is feasible to weld aluminum MMC to MMC or to aluminum-lithium 2195 if the SiC reinforcement is <25 percent by volume fraction. However, a softening in the heat-affected zone was observed and is known to be one of the major limiting factors for joint strength. The pin tool's material is made from a low-cost steel tool H–13 material, and the pin tool's wear was excessive such that the pin tool length has to be manually adjusted for every 5 ft of weldment. Initially, boron-carbide coating was developed for pin tools, but it did not show a significant improvement in wear resistance. Basically, FSW is applicable mainly for butt joining of flat plates. Therefore, FSW of cylindrical articles such as a flange to a duct with practical diameters ranging from 2–5 in. must be fully demonstrated and compared with other proven MMC joining techniques for cylindrical articles.

14. SUBJECT TERMS
friction stir welding, metal matrix composites, silicon-carbide, functional gradient materials, wear-resistant coating, aluminum-lithium 2195, flanges, ducts, pin tool, joining technologies

15. NUMBER OF PAGES
28

16. PRICE CODE
A03

17. SECURITY CLASSIFICATION OF REPORT	18. SECURITY CLASSIFICATION OF THIS PAGE	19. SECURITY CLASSIFICATION OF ABSTRACT	20. LIMITATION OF ABSTRACT
Unclassified	Unclassified	Unclassified	Unlimited