NASA/CR—2001–210990

A New Technique for Achieving Impact Velocities Greater Than 10 km/sec

A.J. Piekutowski
University of Dayton Research Institute, Dayton, Ohio

Prepared for Marshall Space Flight Center
under Contract NAS8–98216
and sponsored by
The Space Environments and Effects Program
managed at the Marshall Space Flight Center

May 2001

The NASA STI Program Office...in Profile

Since its founding, NASA has been dedicated to the advancement of aeronautics and space science. The NASA Scientific and Technical Information (STI) Program Office plays a key part in helping NASA maintain this important role.

The NASA STI Program Office is operated by Langley Research Center, the lead center for NASA's scientific and technical information. The NASA STI Program Office provides access to the NASA STI Database, the largest collection of aeronautical and space science STI in the world. The Program Office is also NASA's institutional mechanism for disseminating the results of its research and development activities. These results are published by NASA in the NASA STI Report Series, which includes the following report types:

- TECHNICAL PUBLICATION. Reports of completed research or a major significant phase of research that present the results of NASA programs and include extensive data or theoretical analysis. Includes compilations of significant scientific and technical data and information deemed to be of continuing reference value. NASA's counterpart of peer-reviewed formal professional papers but has less stringent limitations on manuscript length and extent of graphic presentations.

- TECHNICAL MEMORANDUM. Scientific and technical findings that are preliminary or of specialized interest, e.g., quick release reports, working papers, and bibliographies that contain minimal annotation. Does not contain extensive analysis.

- CONTRACTOR REPORT. Scientific and technical findings by NASA-sponsored contractors and grantees.

- CONFERENCE PUBLICATION. Collected papers from scientific and technical conferences, symposia, seminars, or other meetings sponsored or cosponsored by NASA.

- SPECIAL PUBLICATION. Scientific, technical, or historical information from NASA programs, projects, and mission, often concerned with subjects having substantial public interest.

- TECHNICAL TRANSLATION. English-language translations of foreign scientific and technical material pertinent to NASA's mission.

Specialized services that complement the STI Program Office's diverse offerings include creating custom thesauri, building customized databases, organizing and publishing research results...even providing videos.

For more information about the NASA STI Program Office, see the following:

- Access the NASA STI Program Home Page at ***http://www.sti.nasa.gov***

- E-mail your question via the Internet to help@sti.nasa.gov

- Fax your question to the NASA Access Help Desk at (301) 621–0134

- Telephone the NASA Access Help Desk at (301) 621–0390

- Write to:
  NASA Access Help Desk
  NASA Center for AeroSpace Information
  7121 Standard Drive
  Hanover, MD 21076–1320

NASA/CR—2001–210990

A New Technique for Achieving Impact Velocities Greater Than 10 km/sec

A.J. Piekutowski
University of Dayton Research Institute, Dayton, Ohio

Prepared for Marshall Space Flight Center
under Contract NAS8–98216
and sponsored by
The Space Environments and Effects Program
managed at the Marshall Space Flight Center

National Aeronautics and
Space Administration

Marshall Space Flight Center • MSFC, Alabama 35812

May 2001

Acknowledgments

The work described in this Contractor Report was performed under Contract NAS8–98216 to the George C. Marshall Space Flight Center as part of the Space Environments and Effects (SEE) program. The author wishes to gratefully acknowledge the support offered by Billy Kauffman, SEE Program Manager; Steve Pearson, SEE Senior Advisor; and Greg Olsen and Angela Nolen, Contracting Officer's Technical Representatives. The author would also like to recognize the invaluable assistance provided by fellow UDRI associates Kevin Poormon, Bob Gooding, Tim Klopfenstein, Mark Laber, and Dick Tocci.

Available from:

NASA Center for AeroSpace Information
7121 Standard Drive
Hanover, MD 21076–1320
(301) 621–0390

National Technical Information Service
5285 Port Royal Road
Springfield, VA 22161
(703) 487–4650

TABLE OF CONTENTS

		Page
SECTION I.	INTRODUCTION	1
SECTION II.	DESCRIPTION OF AUGMENTED ACCELERATION TECHNIQUE	5
SECTION III.	LAUNCHER AND CARTRIDGE DESIGN AND DESCRIPTION	15
	A. Launcher Design and Hardware	17
	B. Cartridge Design	21
SECTION IV.	TEST RESULTS	27
	A. Cartridge Test Results	27
	1. Proof Tests	27
	2. Test Firings	29
	B. Launcher Test Firings	38
SECTION V.	McGILL UNIVERSITY THREE-STAGE LAUNCHER TECHNIQUE	53
	A. Description of Hardware	54
	B. Results of Test Firings	56
SECTION VI.	SUMMARY AND RECOMMENDATIONS	65
	REFERENCES	67

LIST OF ILLUSTRATIONS

Figure	Title	Page
1.	Performance limits for two light-gas guns (with launch tubes having different length-to-bore-diameter ratios) as a function of launch package "density"	6
2.	Illustration showing the relationship of the compressed gas cartridge and internal launcher components just before the projectile enters the injector section of the third-stage launch tube	8
3.	Simple model used to estimate performance of the third stage of the launcher	8
4.	Effects of a change in the initial charge pressure of a cartridge on the pressure history of the gas accelerating the projectile. The *mass* of hydrogen and the cartridge velocity were held constant for the three cases shown	11
5.	Effects of a change in the initial charge pressure of a cartridge on the projectile velocity. The *mass* of hydrogen and the cartridge velocity were held constant for the three cases shown	11
6.	Effects of a change in the mass of hydrogen in a cartridge on the pressure history of the gas accelerating the projectile. The initial charge pressure was held constant at 41 MPa and the velocity of the cartridge was reduced as the cartridge mass increased for the three cases shown	13
7.	Effects of a change in the mass of hydrogen in a cartridge on the projectile velocity. The initial charge pressure was held constant at 41 MPa and the velocity of the cartridge was reduced as the cartridge mass increased for the three cases shown	13
8.	View of the UDRI 75/30-mm, two-stage, light-gas gun range	15
9.	View of blast tank used with UDRI 75/30 mm, two-stage, light-gas gun. Third stage of augmented acceleration launcher is mounted inside this tank	16

LIST OF ILLUSTRATIONS
(Continued)

Figure	Title	Page
10.	Illustration of the third-stage of the augmented acceleration launcher assembly. Details of the metal-to-metal seals used between the 30-mm launch tube and launch tube extension and between the injector/ cartridge stripper and the 6.5-mm launch tube are not shown	18
11.	View of the third stage launcher assembly installed on the muzzle of the UDRI 75/30-mm, two-stage, light-gas gun	20
12.	View of the third stage launcher assembly showing the third-stage launch tube and launcher support structure	21
13.	View of the pressure intensifier system being used to charge a cartridge in preparation for a test firing	23
14.	View of an assembled cartridge with a projectile in the integral front gallery	25
15.	Exploded view of a cartridge showing all of its components	25
16.	View of the body of the cartridge that failed at an internal pressure of 56.5 MPa (8,200 psi). Note the longitudinal crack along the length of the body and the complete separation of the toriconical head from the cartridge body	29
17.	Relationship of the launch tube extension and injector section before and after Shot 8-3140. Note the large shear failures in the root of the injector and the complete closure of the bore of the injector	41
18.	Relationship of the launch tube extension and injector section before and after Shot 8-3141. Note the large shear failures in the root of the injector and the complete closure of the bore of the injector	42
19.	Relationship of the launch tube extension and injector section before and after Shot 8-3142	44
20.	Relationship of the launch tube extension and injector section before and after Shot 8-3143	46
21.	Relationship of the launch tube extension and injector section before and after Shot 8-3144	47

LIST OF ILLUSTRATIONS
(Concluded)

Figure	Title	Page
22.	Relationship of the launch tube extension and injector section before and after Shot 8-3145	48
23	View of the interior of the injector section used for Shot 8-3145	49
24	Relationship of the launch tube extension and injector section before and after Shot 8-3147	51
25	Illustration of the adaptation of the launch tube extension and injector section for use with the McGill University style launcher. The relationship of these two components is shown before and after Shot 8-3146	53
26	Illustration of the McGill University style three-stage launcher assembly. Details of the metal-to-metal seals used between the 30-mm launch tube and the high-pressure section and between the high-pressure section and the 6.5-mm launch tube are not shown	55

LIST OF TABLES

Table	Title	Page
1.	Values for parameters used in simple model	10
2.	Base pressures for third test firing of a nylon slug	32
3.	Results of test firings of pressurized cartridges	33
4.	Results of test firings of three-stage launcher	41
5.	Results of test firings of three-stage launcher (McGill University technique)	59

SECTION I. INTRODUCTION

Collisions of orbital debris with spacecraft are most likely to occur with impact velocities near 11 km/s. Current test capabilities with particles having diameters of several millimeters or more and conditions of known shape, mass, and state are limited to impact velocities of about 7.5 km/s. The ability to verify the behavior and response of spacecraft shield systems intended to provide protection from the impact of orbital debris fragments traveling at velocities near 11 km/s is necessary to validate the ballistic limit curves used to guide the design of the shield systems.

A number of launchers and launch techniques have been developed and used to accelerate gram-sized projectiles to velocities greater than 10 km/s. These launchers and launch techniques employ one of three principles of operation: (1) single-stage acceleration; (2) augmented acceleration; and (3) counter-fire. A brief review of selected examples of each type of launcher is given in the next paragraph. In single-stage acceleration, the projectile is launched to its final velocity in one cycle of acceleration. Because the time available for acceleration of the projectile is usually very short, the launch loads are extreme and can be damaging to the projectile. In augmented acceleration launchers, the velocity of the projectile is increased during one or more additional cycles of acceleration, allowing the peak launch loads to be somewhat less than that required for a single-stage acceleration to the same velocity. In the counter-fire launch technique, two guns are fired simultaneously with the projectiles colliding in the region between the guns. Counter-fire launch techniques actually duplicate the impact process that occurs in space. However, the size of the targets that can be used with this technique is limited and intact recovery of the targets is difficult. Following is a brief review of each of the three types of launch techniques that have been developed or used to accelerate projectiles to very high velocities. Several examples of each launch technique are provided.

The Space Research Institute at McGill University constructed a three-stage, light-gas gun [1] during the 1960's. This three-stage gun was used to accelerate 12.7-mm-diameter Lexan disks with masses of 1.5 grams (9.6 mm thick) and 1.1 grams (6.4 mm

thick) to velocities of 9.6 and 10.5 km/s, respectively, during a single cycle of acceleration. With the interest in hypervelocity impact that developed in the early 1980's, renewed attention was given to the development of launch techniques capable of accelerating particles to velocities of 10 km/s and higher. Chhabildas *et al.* used a graded-density impactor fired from a two-stage gun to launch a 0.208-gram aluminum flyer plate to a velocity of 13.8 km/s [2] and a 0.068-gram titanium flyer plate to a velocity of 15.8 km/s [3]. Walker *et al.* [4] launched 0.5- to 1-gram, tubular aluminum projectiles to a velocity of 11.2 km/s using an inhibited-shaped-charge device. Geille [5] used a hypervelocity explosive multi-stage launcher to accelerate nominal 1-g aluminum disks to a velocity of near 11 km/s.

Other devices have been used to launch very small fragments to high velocities in a single cycle of acceleration. Exploding metal foils, in an electric gun, were used to launch 4.3-mg Kapton disks to a velocity of 18 km/s [6]. Plasma accelerators have been used to launch glass beads with a mass of $\sim 10^{-8}$ grams to a velocity of 17 km/s [7]. Sub-micrometer particles have been accelerated to almost 100 km/s using a Van de Graaff generator [8]. With the exception of the three-stage, light-gas gun at McGill University, the shape, mass, and state of the projectiles launched by most of the devices could not be controlled or known with much certainty. Clearly, the extreme accelerations required to launch a projectile to velocities in excess of 10 to 15 km/s in a single acceleration cycle can produce significant alterations in the properties of the projectiles.

The two augmented acceleration launchers that are described next used a device that was attached to the muzzle of the gun used to provide a second cycle of acceleration of the projectile during its launch. In the early to mid 1960's, a velocity augmentation technique was under development at the Denver Research Institute and described by Kottenstette *et al.* [9]. In this technique, energy was exchanged between the sabot and a spherical projectile as the sabot was extruded in the tapered bore of a third stage attached to the muzzle of a two-stage, light-gas gun. Velocity increases ranged from 3.5 km/s for nylon projectiles, 2.5 km/s for aluminum projectiles, and 1.5 km/s for steel projectiles. Asay *et al.* [10] used a two-stage, light-gas gun to inject a projectile into a rail gun with

the intent of using the magnetically driven plasma pressure to further accelerate the projectile and achieve a terminal velocities as high as 7.5 km/s above the injection velocity. Significant increases in the projectile velocity (>2 km/s) were not achieved using this technique, however.

The technique of counter firing two guns (i.e., simultaneously firing two projectiles against one another) has been used a number of times to achieve high impact velocities. During the late 1950's, explosively launched fragments were fired against targets fired from a large-bore powder gun to achieve impact velocities of about 5 km/s. Head-on collisions of 10-mg, solid projectiles fired from electromagnetic launchers have obtained impact velocities of ~10 km/s [11]. Arnold Engineering Development Center has counter fired opposing two-stage guns and reached impact velocities of 12 km/s [12]. While the accelerations of the projectiles and targets used in these counter-fire techniques are within permissible limits, the size of the targets is necessarily small and the results of the impact may have to be recorded using dynamic methods since the intact recovery of the impacted targets is difficult.

This report describes and presents the results of work that was done in an attempt to develop an augmented acceleration technique that would launch small projectiles of known shape, mass, and state to velocities of 10 km/s and higher. The higher velocities were to be achieved by adding a third stage to a conventional two-stage, light-gas gun and using a modified firing cycle for the third stage. The technique did not achieve the desired results and was modified for use during the development program. Since the design of the components used for the augmented-acceleration, three-stage launcher could be readily adapted for use as a three-stage launcher that used a single-stage acceleration cycle; the remainder of the contract period was spent performing test firings using the modified three-stage launcher.

Work with the modified three-stage launcher, although not complete, did produce test firings in which a 0.11-g, cylindrical Nylon projectile was launched to a velocity of 8.65 km/s. This modified launcher cycle was identical, in principle, to the launcher and firing cycle used for the three-stage gun developed by the Space Research Institute at

McGill University and used from 1964 to 1966. During this period, the Space Research Institute performed a series of bumper shield studies under contract to NASA Lewis. They developed and used a three-stage, light-gas gun to launch 12.7-mm-diameter, Lexan disks to impact velocities of 10.5 km/s. However, their work is relatively unknown, and very little has been published that describes the gun and its operation. A brief description, consisting of 3-1/2 pages of double-spaced text, two photographs, and three figures was included in the final report produced at the end of the first series of bumper shield studies. To date, this appears to be the only published documentation of the McGill three-stage launcher.

This report presents a review of the augmented acceleration launch technique that was under development during the major portion of the contractual effort. This review includes a description of the modified firing cycle, anticipated performance data, a description of the components used in the construction of the third stage of the launcher, and a summary of the performance of the augmented acceleration launcher system. The report concludes with a description of the modified three-stage launcher and the results of the test firings that were performed using the modified launcher.

SECTION II. DESCRIPTION OF AUGMENTED ACCELERATION TECHNIQUE

A two-stage, light-gas gun uses a propellant-driven piston in the first stage to compress a charge of hydrogen gas in a large-bore pump tube. The charge of compressed hydrogen is used to accelerate a projectile in a small-bore, second-stage launch tube. Hydrogen is typically used as the propelling gas in two-stage, light-gas guns because of its low density. Helium is used in some two-stage, light-gas guns but its higher density reduces the maximum velocity that can be achieved with the gun. The density of the propelling gas has a significant effect on the velocity that can be obtained for a given set of loading conditions because the projectile's velocity is limited by the velocity of the gas accelerating the projectile. A heavier gas consumes a greater portion of the system energy available for use in accelerating the gas to hypervelocity than a lighter gas, leaving less energy available to accelerate the projectile.

Most two-stage, light-gas guns have operational limits imposed on them because of safety restrictions, attempts to minimize wear or abuse of the gun components, and by the peak accelerations or launch loads that can be sustained, without failure, by the projectile. Typical upper performance limits for two-stage, light-gas guns are shown in Figure 1 for two guns with different length-to-bore-diameter ratio launch tubes. This figure presents the upper limits of projectile velocity, as a function of the projectile "density," that can be achieved with these guns when excessive wear or abuse of gun components and projectile launch loads are limiting considerations in the operation of the guns. Projectile "density," in Figure 1, is simply defined as the mass of the launch package divided by the bore diameter cubed. Strictly speaking, the effective projectile density is its mass divided by its volume. However, the use of the density shown in Figure 1 requires a simpler calculation.

In addition to the limits imposed by wear and abuse of gun components, a lower limit is also imposed by the practical aspects of the design and utility of launch packages with very low densities. As a point of reference, the launch packages used in the development of Figure 1 all contained a metal projectile (usually a sphere at the highest

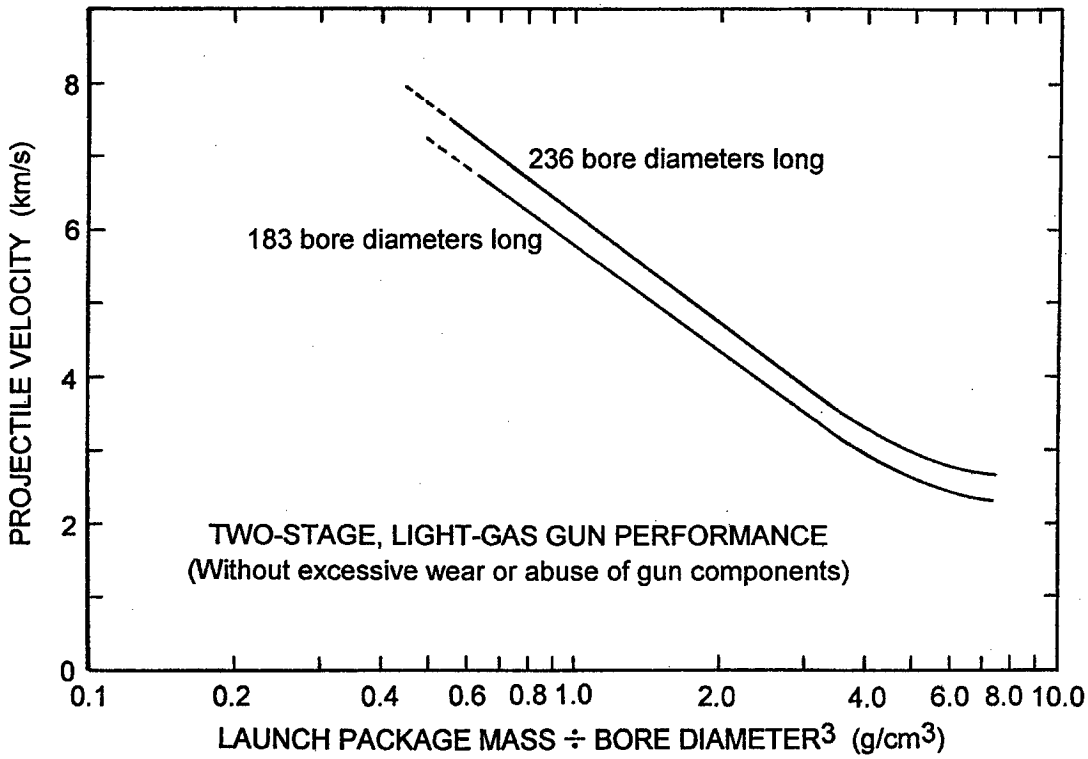

Figure 1. Performance limits for two light-gas guns (with launch tubes having different length-to-bore-diameter ratios) as a function of launch package "density."

velocities shown). It is possible to launch lighter packages to higher velocities but practical material considerations limit their shapes to disks or disk-like objects. Increasing the limits on the amount of wear and abuse that can be tolerated for the gun components would increase the velocity limits shown on the curves, but not significantly.

In the three-stage, light-gas gun developed at McGill University [1], the projectile in the second stage was a piston and was used to compress a second charge of hydrogen gas that filled the second-stage launch tube. It was not clear in the description of the McGill gun whether a burst disk was installed at the breech end of the third-stage launch tube or whether friction or a shear ring held the projectile in place until the build-up in pressure of the hydrogen in the second stage launch tube caused the projectile to "release" and the gun to "fire." In any event, the projectile started from rest and was accelerated to its final velocity in the third stage. Because of the very high pressures developed in the second-stage hydrogen column, the acceleration of the projectile was extreme in order to

achieve velocities in excess of 10 km/s. However, simple, disk-shaped projectiles were launched "cold" and intact.

In the augmented acceleration technique, the projectile enters the third stage of the launcher traveling at a velocity of ~4.1 km/s. After being inserted in the third-stage launch tube, the projectile is accelerated a second time to increase its velocity. In the modified three-stage or augmented acceleration firing cycle, the second-stage launch tube is evacuated. The hydrogen used to accelerate the projectile as it travels down the third-stage launch tube is contained in a small pressurized, high-strength aluminum cartridge that forms the projectile in the second stage. A small aluminum projectile is held in a nylon sabot that is carried at the front of the compressed gas cartridge. To facilitate further discussion of the modified-cycle or augmented acceleration, three-stage launcher, the combined projectile/sabot package inserted in the front of the cartridge will be referred to as the "projectile." The compressed gas cartridge assembly will simply be called the "cartridge."

The illustration presented in Figure 2 will be used to describe the sequence of events that occur as the cartridge enters the third-stage of the launcher. First, the projectile is dynamically inserted into the injector section at the breech end of the third-stage launch tube. When the insertion process is nearly complete, the front end of the cartridge impacts the injector, the projectile is released, and the projectile begins to travel down the third-stage launch tube at its insertion velocity. At the end of the projectile release process, the front of the cartridge fractures, exposing the base of the projectile to the high-pressure hydrogen in the cartridge. When fragmentation of the front of the cartridge is complete, the side walls of the cartridge enter and seal the circular gap between the injector and the second-stage launch tube extension. The kinetic energy of the cartridge case continues to drive the cartridge downrange and compress the hydrogen in the cartridge. A second cycle of acceleration of the projectile follows the exposure of its base to the reservoir of rapidly compressing hydrogen gas. As shown in Figure 2, the side walls of the cartridge are tapered to accommodate launch loads. The increasing thickness of the side walls also compensates for the erosion of injector and barrel extension material that occurs during the extrusion process.

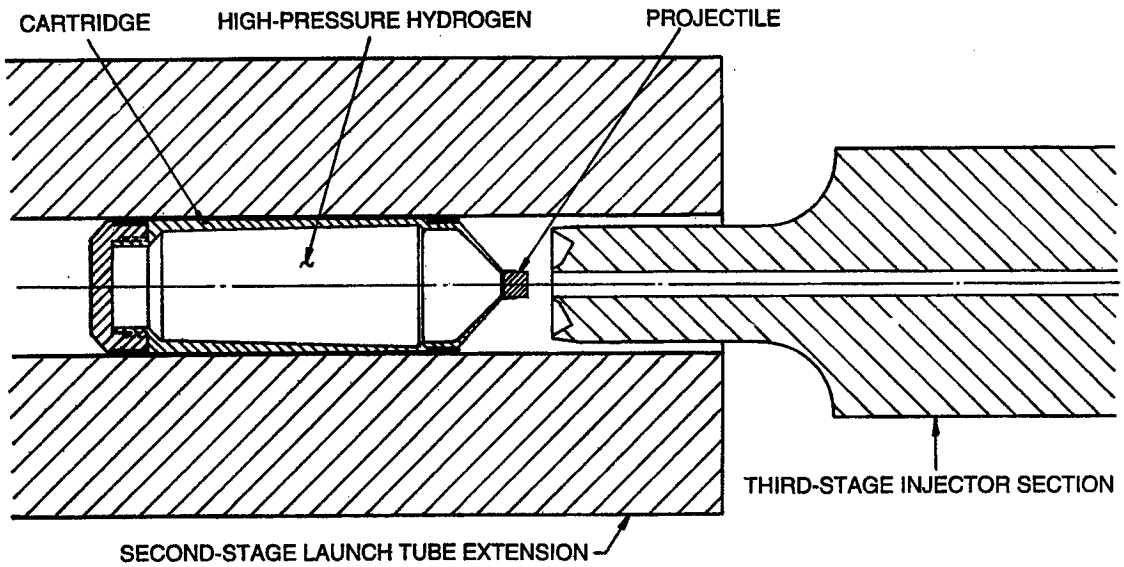

Figure 2. Illustration showing the relationship of the compressed gas cartridge and internal launcher components just before the projectile enters the injector section of the third-stage launch tube.

A simple model was developed and used to estimate the performance (i.e., final projectile velocity) of the third stage of the launcher system and to assist in making decisions regarding the selection of various operating parameters, particularly for the cartridge. The various parameters are shown in the model presented in Figure 3. For the cartridge, these parameters are: P_i, the initial charge pressure of the hydrogen in the cartridge; M_c, the mass of the cartridge (less the mass of the head section); V_c, the projectile insertion velocity; D_c, the average internal diameter of the cartridge; and L_i, the

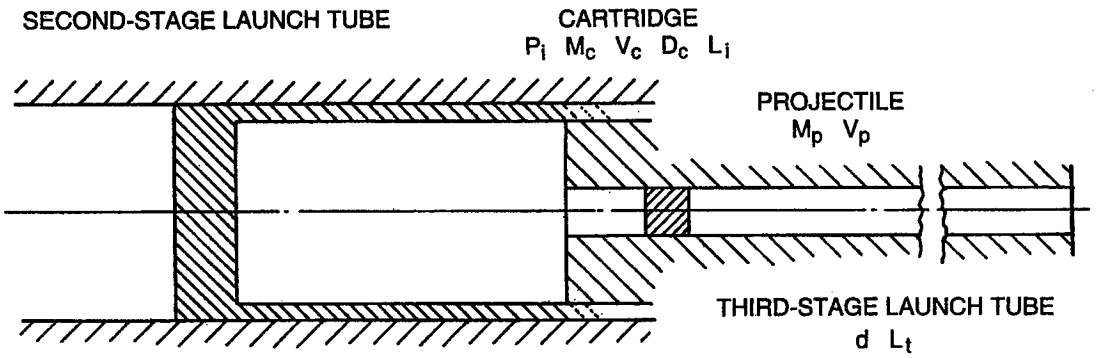

Figure 3. Simple model used to estimate performance of the third stage of the launcher.

initial length of the walls of the cartridge. The projectile mass, M_p, the projectile velocity, V_p, and the third-stage launch tube diameter, d, and length, L_t, complete the list of variables. Several simplifying assumptions were made during the development of the model regarding the pressure distribution and flow of the hydrogen during its transfer from the cartridge to the third-stage launch tube. Shock waves and their effect on the instantaneous variation in the pressure distribution in the cartridge were ignored. In addition, it was assumed that the flow of hydrogen from the cartridge to the third-stage launch tube was not choked and was not affected by debris generated by the impact of the cartridge front with the injector.

Two versions of the model were developed. Both versions allowed the cartridge to move an incremental distance and then computed new values of displacement, pressure (following an isentropic compression of the hydrogen), velocity, energy, etc. for the various components in the system. One version used an energy balance to compute the redistribution of the system's energy before beginning the next cycle of computations. The second version computed the reduction in the velocity of the cartridge using the increase in the pressure of the hydrogen to decelerate the cartridge and setup the conditions for the start of the next cycle. The results (i.e., hydrogen pressure history and projectile velocity) of the computations made using both models and were compared and found to be essentially the same.

Parametric sensitivity studies were performed to examine the relative effects of changes in the launcher loading variables (i.e., cartridge volume, hydrogen charge pressure, injection velocity of the third-stage projectile, etc.) on the launch loads applied to the third-stage projectile and the final projectile velocity. The launcher dimensions and the launcher loading variables used in the parametric sensitivity study are presented in Table 1. In general, the results of the study indicated that longer cartridges, with a lower initial charge pressure, produced the most favorable launch acceleration profile (lowest peak base pressure) for the third-stage projectile. The results of this series of parametric sensitivity studies were used to determine the cartridge volume and charge pressure used for the initial test firings of the launcher.

TABLE 1

VALUES FOR PARAMETERS USED IN SIMPLE MODEL

The following parameters were fixed: third-stage launch tube diameter, d, at 5.54 mm (0.218 in.); third-stage launch tube length, L_t, at 1.377 m (54.12 in.); and projectile mass, M_p, at 0.153 g

Variable	*Units*	*Constant hydrogen mass*			*Variable hydrogen mass*		
Initial charge pressure of hydrogen, P_i	*MPa* (*psi*)	41.37 (6,000)	55.16 (8,000)	68.95 (10,000)	41.37 (6,000)	41.37 (6,000)	41.37 (6,000)
Cartridge volume	cm^3 (in^3)	42.29 (2.58)	31.80 (1.94)	25.4 (1.55)	42.29 (2.58)	63.43 (3.87)	84.57 (5.16)
Cartridge mass, M_c	*g*	61	61	61	61	76	91
Average internal diameter of cartridge, D_c	*mm* (*in.*)	26.42 (1.04)	25.40 (1.00)	24.38 (0.96)	26.42 (1.04)	26.42 (1.04)	26.42 (1.04)
Initial length of cartridge walls, L_i	*mm* (*in.*)	77.72 (3.06)	62.48 (2.46)	54.36 (2.14)	77.72 (3.06)	116.56 (4.59)	155.45 (6.12)
Projectile insertion velocity, V_c	*km/s*	4.1	4.1	4.1	4.1	3.6	3.33

Results of one set of the parametric studies are presented in Figures 4 and 5. In the plots presented in these figures, the pressure generated in the hydrogen and the velocity of the projectile are shown as a function of the displacement or distance traveled by the projectile. For the cases shown in Figures 4 and 5, the initial or charge pressure of the hydrogen was varied from 41 MPa (6,000 psi) to 69 MPa (10,000 psi). The *mass* of the hydrogen was held constant for these three cases. The length and the average internal diameters of the cartridges were adjusted to accommodate the different volumes and internal pressures, respectively. Preliminary sizing calculations indicated that the change in the mass of the cartridge resulting from the decrease in its length is offset by the increase in mass resulting from the increase in the side wall thickness required to withstand the higher internal pressures.

Overall, the analysis indicated that the peak pressure acting on the base of the projectile increased as the initial charge pressure increased. This result is not surprising. The model also indicated that the velocity of the cartridge would not decrease significantly until its base was about to come in contact with the injector at the end of the compression

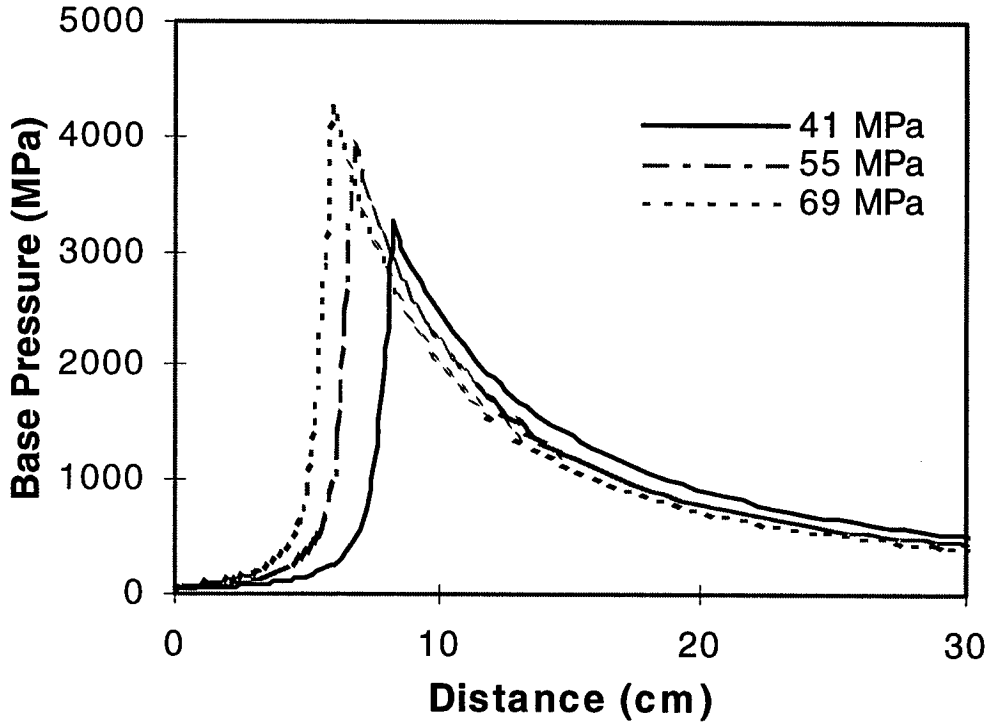

Figure 4. Effects of a change in the initial charge pressure of a cartridge on the pressure history of the gas accelerating the projectile. The *mass* of hydrogen and the cartridge velocity were held constant for the three cases shown.

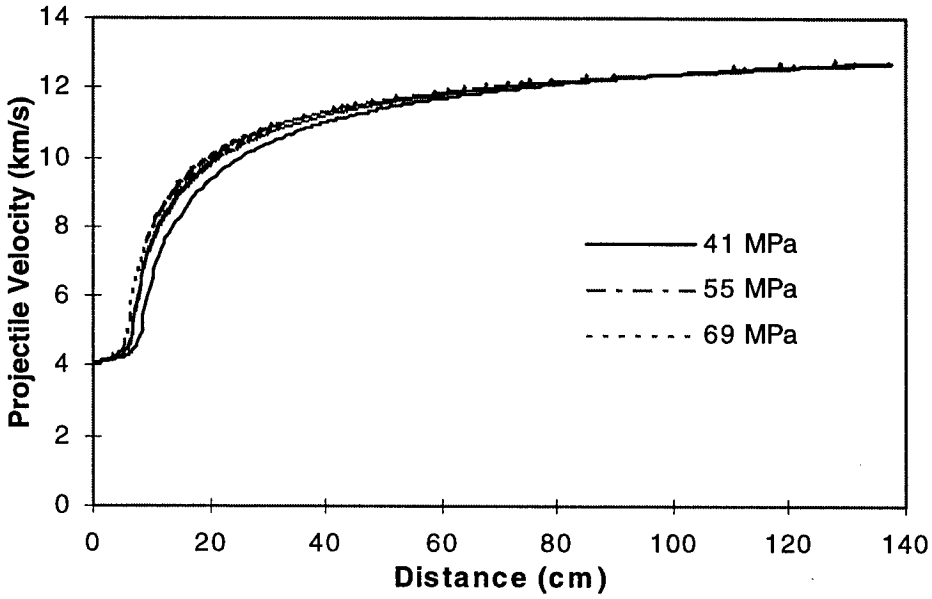

Figure 5. Effects of a change in the initial charge pressure of a cartridge on the projectile velocity. The *mass* of hydrogen and the cartridge velocity were held constant for the three cases shown.

cycle. In this way, the velocity history of the cartridge during the compression cycle is similar to the velocity history of a long-rod penetrator during its interaction with a semi-infinite target. Because the travel time for the high-pressure cartridge is the lowest for the three cases, the peak pressure will occur sooner for this case since the projectile has the least time to move down range, forcing the gas to occupy a smaller volume in the launch tube. The peak base pressures experienced by the projectiles will be considerably lower than the values shown in the figures because of real gas effects, the effects of the geometry of the cartridges, and the space available for the gas during the compression cycle.

The plot of projectile velocity as a function of distance, presented in Figure 5, shows that the terminal velocity achieved by the projectile for each of the three test cases was the same. Consequently, the case with the lowest peak pressure was selected for use since it would produce the lowest launch stresses in the projectile. The results of this series of simulations were used to determine the cartridge volume and charge pressure to be used in the initial test firings of the launcher. The internal volume of the cartridge was determined to be 41 cm^3 (2.5 in^3), the charge pressure of the hydrogen was 41.4 MPa (6,000 psi), and the mass of the fully assembled cartridge was 65 g (including 1.42 g of hydrogen). The nominal insertion velocity of the cartridge was determined to be 4.1 km/s, or the maximum velocity the 65-g cartridge could achieve using our larger two-stage, light-gas gun. In the initial test firings, the projectile was a 5.54-mm-diameter, 5.54-mm-long Nylon cylinder with a mass of 0.153 g. For the launch conditions given, the model predicted a final projectile velocity of 12.7 km/s. Our previous experience with the comparison of nominal to predicted launch velocity for two-stage gun firings would indicate that the measured projectile velocity would be about 10.1 km/s.

The effects of a change in the mass of hydrogen and the corresponding change in the length of the cartridge on the predicted base pressure and projectile velocity are shown in Figures 6 and 7. For the three cases illustrated in these figures, the pressure was held constant at 41 MPa, and the mass of the hydrogen in the cartridge was increased to 1.5 and 2 times the nominal case (M = 1). Because the mass of the assembled cartridges increased as their volume increased, the velocity of the cartridge had to be decreased to

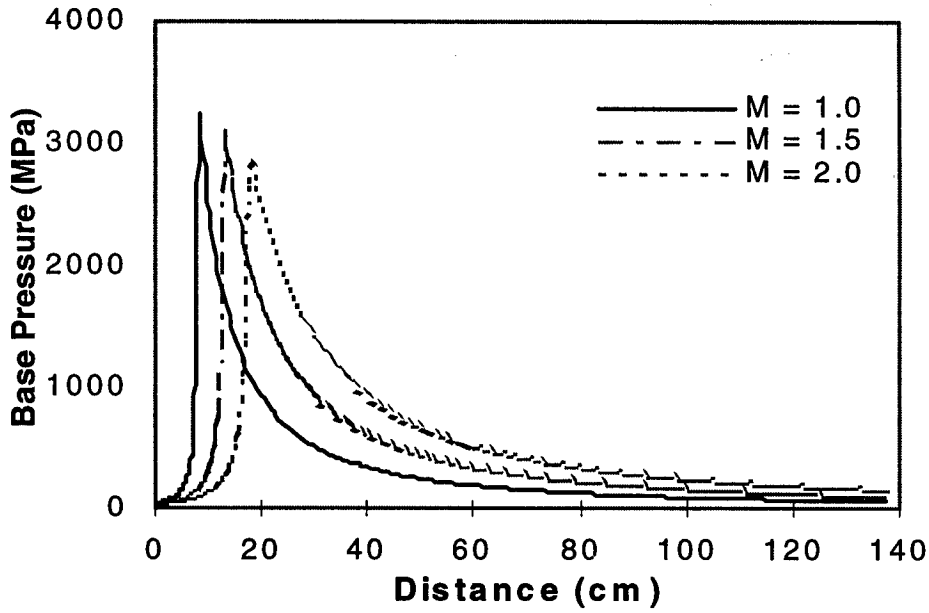

Figure 6. Effects of a change in the mass of hydrogen in a cartridge on the pressure history of the gas accelerating the projectile. The initial charge pressure was held constant at 41 MPa and the velocity of the cartridge was reduced as the cartridge mass increased for the three cases shown.

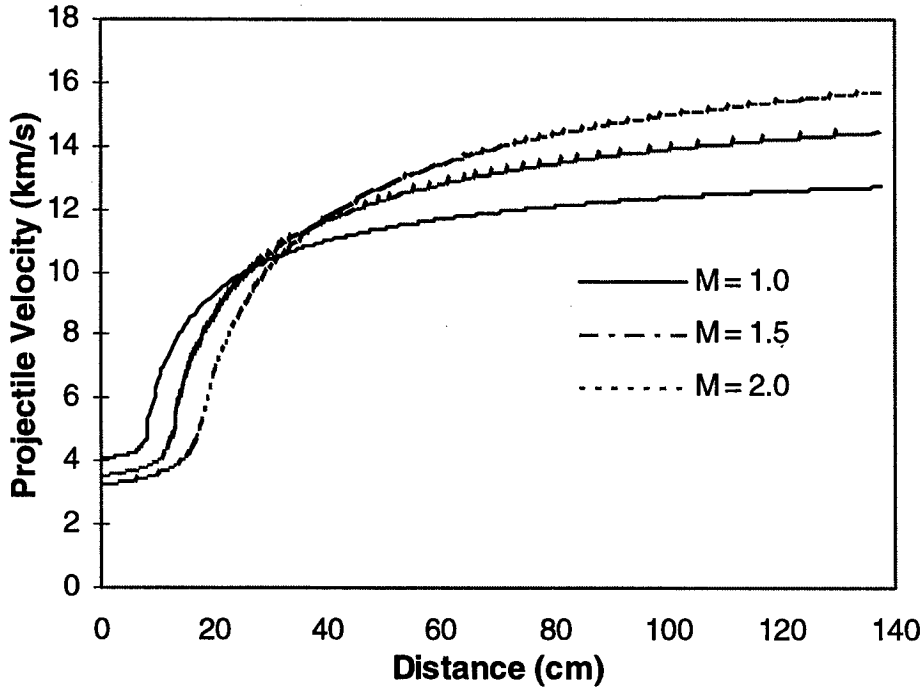

Figure 7. Effects of a change in the mass of hydrogen in a cartridge on the projectile velocity. The initial charge pressure was held constant at 41 MPa and the velocity of the cartridge was reduced as the cartridge mass increased for the three cases shown.

stay within the performance limits of the two-stage gun. The peak pressure decreased as the mass of the hydrogen (and the length of the cartridge) increased. More noteworthy in this figure is the fact that the pressure remains at a higher but very acceptable level for the remainder of the launch cycle.

Because the average pressure behind the projectile is higher as the cartridge length is increased, the projectile is accelerated to a higher velocity even though its initial velocity was lower. As illustrated in Figure 7, a nominal projectile velocity of 15.7 km/s is indicated for the case where M = 2. The measured velocity for this case could be on the order of 12 km/s. Key to examining launcher performance for this set of conditions is the ability to fabricate and launch a long cartridge.

SECTION III. LAUNCHER AND CARTRIDGE DESIGN AND DESCRIPTION

The third stage of the augmented acceleration launcher was designed for installation at the muzzle end of the second stage of the University of Dayton Research Institute's (UDRI) 75/30 mm, two-stage, light-gas gun, Range 8. A view of this range is presented in Figure 8. The first stage, or the pump tube, has a 75-mm-diameter bore, is 4.9 m long, and is attached to the high-pressure section using a differential thread system. A 5.5-m-long, 30-mm-diameter bore launch tube (the second stage) is attached to the high-pressure section using a number of high-strength bolts which pass through a heavy collar threaded on the breech end of the launch tube. A flat, scored burst disk is held in a removable insert that is installed in the high-pressure section at the time the gun is assembled for firing. The projectile and sabot are seated in the launch tube prior to joining the launch tube and the high-pressure section. A three-component piston is loaded in the breech end of the pump tube prior to attaching the powder chamber to the pump tube.

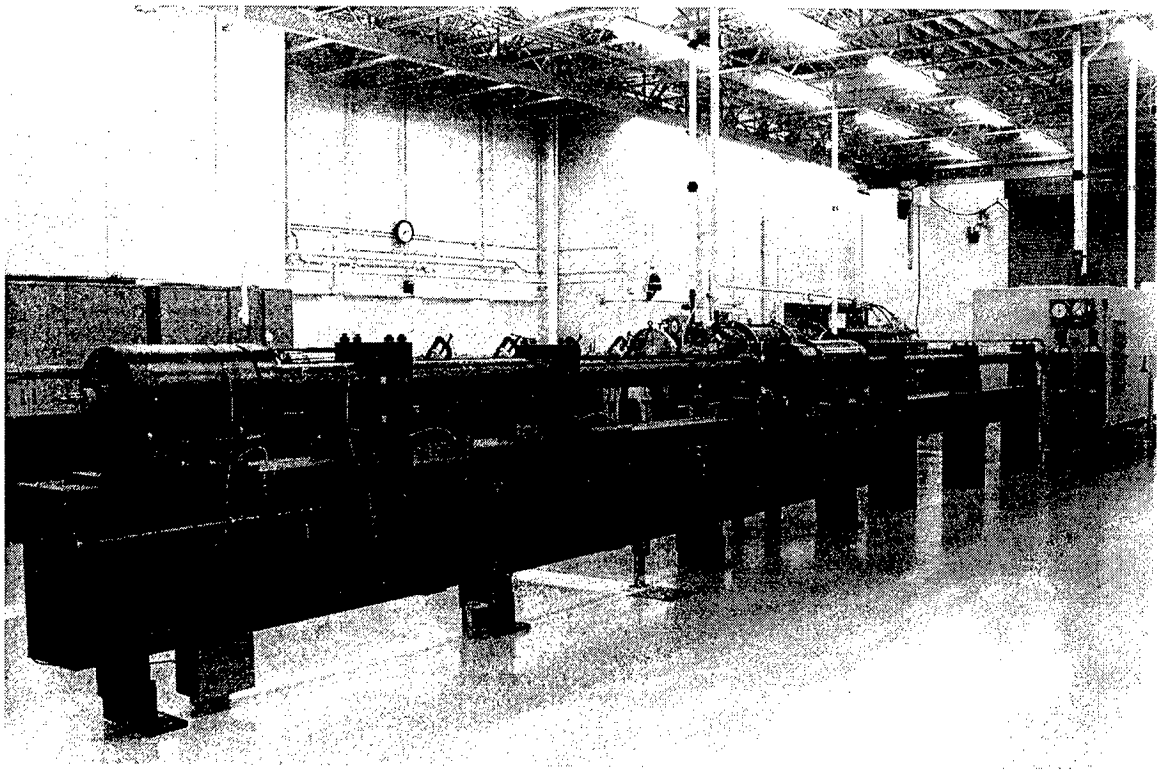

Figure 8. View of the UDRI 75/30-mm, two-stage, light-gas gun range.

The range is equipped with a rather voluminous blast tank, shown in Figure 9, to facilitate a rapid expansion of the high-pressure hydrogen gas released during normal operation of the gun. All components of the third stage of the launcher described in this report were located inside the front section of this blast tank. A moderate sized target chamber, 90 cm x 90 cm x 150 cm, is located downrange of the blast tank and is joined to the blast tank by an instrumentation section. Sabot stripping plates are installed in the instrumentation section at the junction of the instrumentation section and target chamber.

Selection of the loading conditions (i.e., powder charge, piston weight, hydrogen charge pressure, and burst disk release pressure) is accomplished with use of a computer program that models the interior ballistics of the light-gas gun. In almost every case, the softest (lowest peak acceleration) launch conditions are desired and this code has been used very successfully to determine optimum loading conditions for both two stage, light-

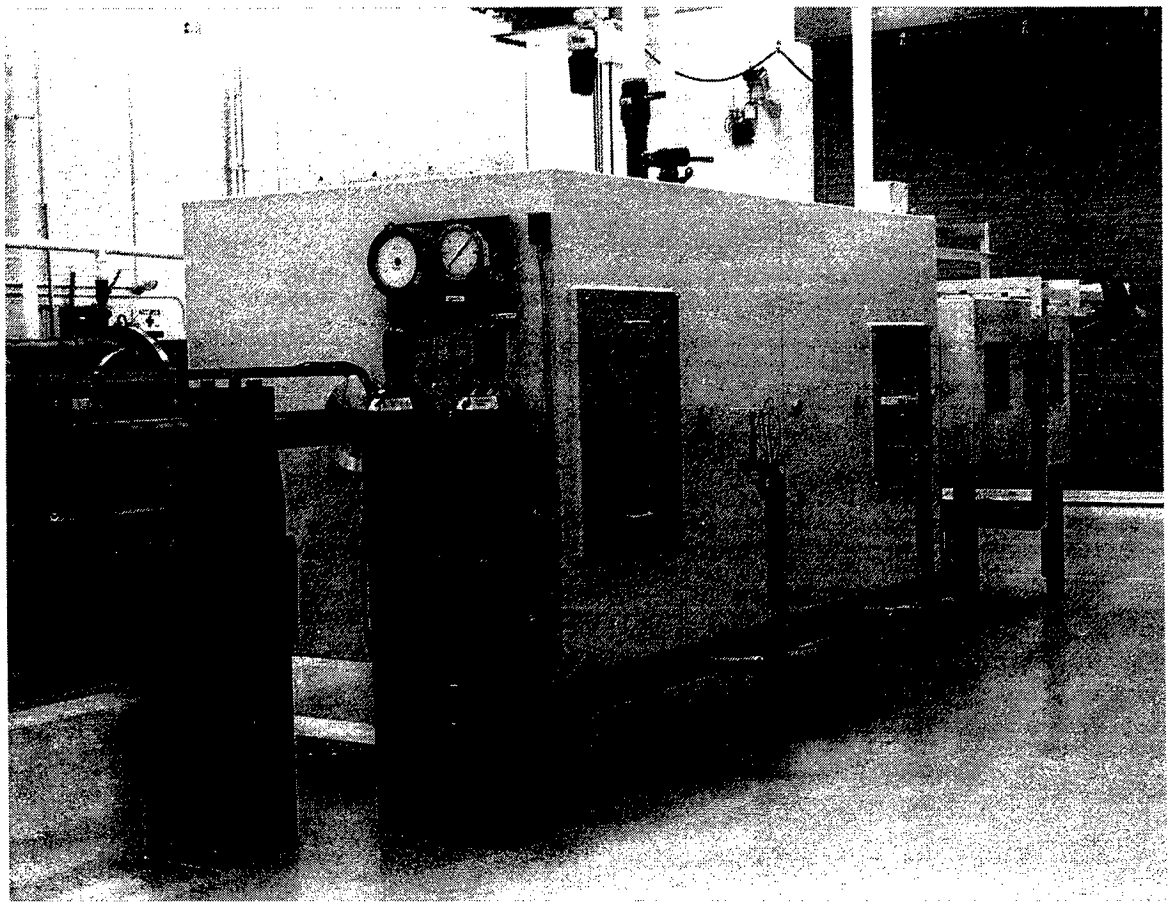

Figure 9. View of blast tank used with UDRI 75/30 mm, two-stage, light-gas gun. Third stage of augmented acceleration launcher is mounted inside this tank.

gas guns at UDRI. To facilitate a comparison of the nominal projectile loading conditions obtained from the light-gas gun code with those conditions actually experienced by the launch package, 12 pressure transducers have been installed at various locations along the gun. In addition to powder chamber pressure, pressures at three locations along the pump tube and eight locations along the launch tube are determined for each gun firing. The pressure transducers in the launch tube not only provide individual pressure histories of the hydrogen gas at each transducer location, but in-bore, time-of-arrival data which can be used to determine incremental projectile velocities and to approximate acceleration values for the launch packages.

Projectile velocity determinations are made with use of four laser-photodetector systems installed at various points along the range. Passage of a projectile through a laser beam directed into the photodetector of each system produces a momentary drop in the output signal of the photodetector. Measurement of the time between the electrical pulses formed as the projectile moves downrange permits the computation of the projectile velocity between any pair of laser-photodetector stations. These laser-photodetector systems are also used to provide trigger pulses for use with flash radiography and/or other transient event recording equipment.

The target chamber is equipped with an orthogonal flash x-ray head support system and suitable viewing ports. Up to four orthogonal pairs of flash x-rays can be used to view events associated with the impact of a projectile and a target. Firing of the flash x-ray system is accomplished with the use of a trigger pulse generated when the projectile passes through the beam of a "laser-ladder" photodetector system located in the region just uprange of the target. Appropriate firing times for the flash x-rays are predetermined and controlled using time-delay generators.

A. Launcher Design and Hardware

An illustration of the major components of the third stage of the launcher is presented in Figure 10. The muzzle end of the 30-mm launch tube had to have the threads and sealing/alignment groove installed as part of the preparations for the installation

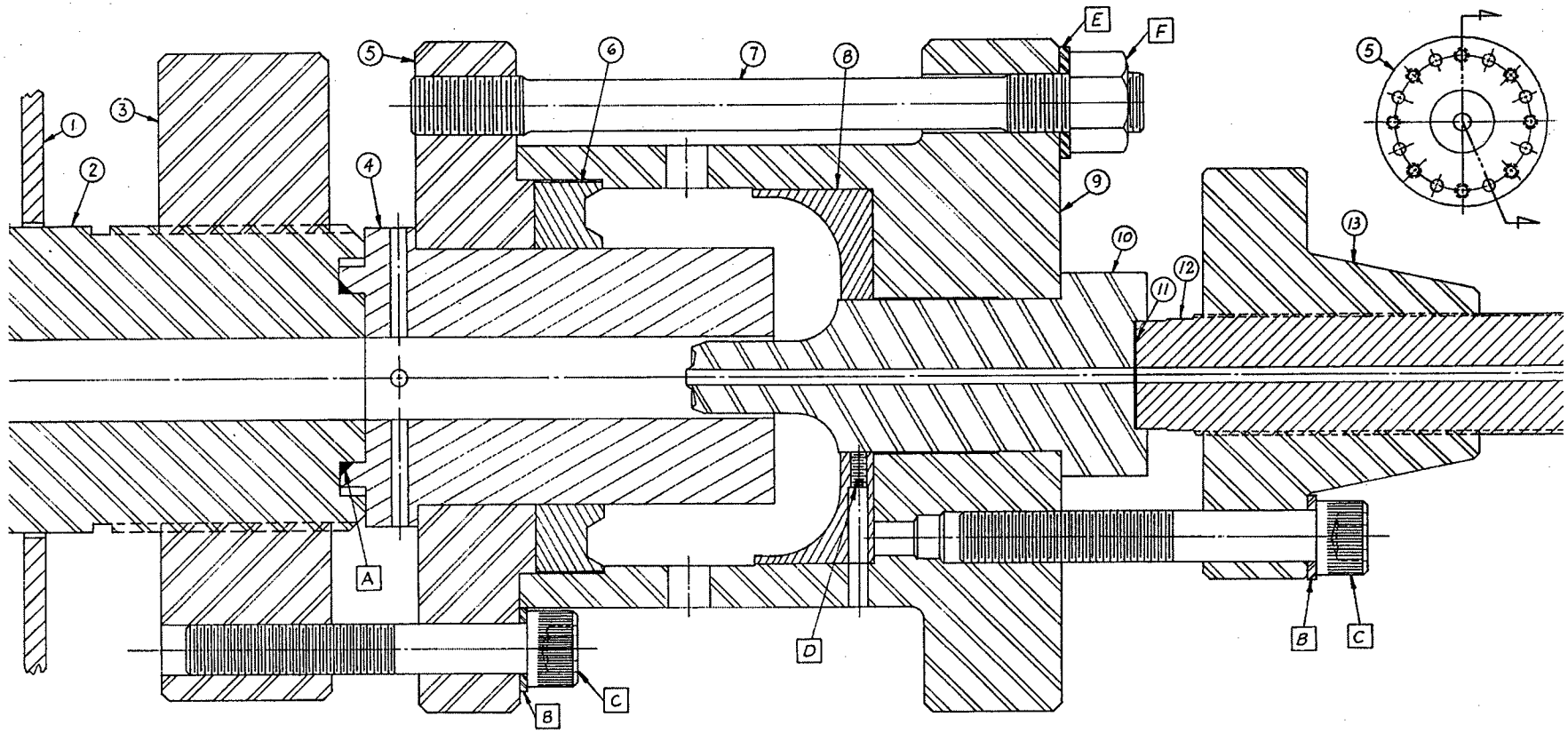

SPECIALTY PARTS

1. Front Wall of Blast Tank
2. 30 mm Launch Tube
3. 30 mm Launch Tube Collar
4. 30 mm Launch Tube Extension
5. Third Stage Front Collar
6. Cartridge Debris Stopper
7. Third Stage Stud
8. Cartridge Debris Turner
9. Third Stage Housing
10. Injector/Cartridge Stripper
11. Seal
12. 5.6 mm Launch Tube
13. 5.6 mm Launch Tube Collar

PURCHASED PARTS

A. "O"-Ring
B. Flat Washer
C. Socket Head Cap Screw
D. Set Screw
E. Flat Washer
F. Hex Nut

Figure 10. Illustration of the third-stage of the augmented acceleration launcher assembly. Details of the metal-to-metal seals used between the 30-mm launch tube and launch tube extension and between the injector/cartridge stripper and the 6.5-mm launch tube are not shown.

of the third stage of the launcher on the range. Also, the details of the metal-to-metal seals, bolts, and alignment devices are not shown in Figure 10.

The 30-mm launch tube extension is secured to the muzzle of the 30-mm launch tube using two collars and 8 large, high-strength bolts. The bore of the 30-mm launch tube extension was aligned with the bore of the 30-mm launch tube using a small boss that protruded from the front of the extension and mated with a corresponding groove in the face of the launch tube. The injector/cartridge stripper and the 5.6 mm bore, third-stage launch tube were joined using a second set of 8, large high-strength bolts which passed through the 5.6 mm launch tube collar into the third stage housing. The axial position and alignment of the injector/stripper and the 30-mm launch tube extension was maintained by using close-fitting joints between the housing and the clamping collar on the barrel extension. The housing was joined to the forward clamping collar using a set of 8, high-strength studs and nuts. A loose-fitting stopper ring, used to absorb the impact of the extruded aluminum tube, was installed in a portion of the space between the housing and the barrel extension. With the exception of the stopper, all components shown in Figure 10 were fabricated from heat-treated 4340 steel. Hot-rolled steel tubing was used for the stopper. The 30-mm launch tube extension, the injector/cartridge stripper, and the stopper were scrapped after each shot.

Two additional ports were installed near the muzzle end of the 30-mm launch tube. These ports were installed when the launch tube was removed from the range for the machining of the threads and alignment groove used to secure the third stage of the launcher to the range. A pressure transducer port was installed 0.3 m up range of the pressure transducer that was installed near the muzzle of the tube when the launch tube was originally fabricated. The difference in the time of arrival of the cartridge at both of the pressure transducer ports near the muzzle of the launch tube was used to obtain an approximate velocity of the cartridge just before it entered the third stage launcher. A port was also installed near the muzzle of the 30-mm launch tube for the attachment of a high-pressure valve. The valve was used to vent hydrogen gas that may become trapped in the 30-mm launch tube after the test firing.

The third-stage launcher was held in mounts on a range beam that was supported by a structural iron frame located inside the blast tank. The structural iron frame was secured to the interior of the blast tank at the point of attachment of the legs that are used to support the blast tank. Attachment was made at those points to preclude the possibility of the third-stage launcher shifting when the blast tank was evacuated for the test firing. The loads due to the difference between atmospheric pressure on the outside of the blast tank and the reduced pressure inside the blast tank produces a significant inward displacement of the blast tank walls. The third stage of the launcher is shown installed at the muzzle of the UDRI 75/30 mm, two-stage, light-gas gun in Figure 11. A view of the third-stage launch tube and its supporting structure is shown in Figure 12.

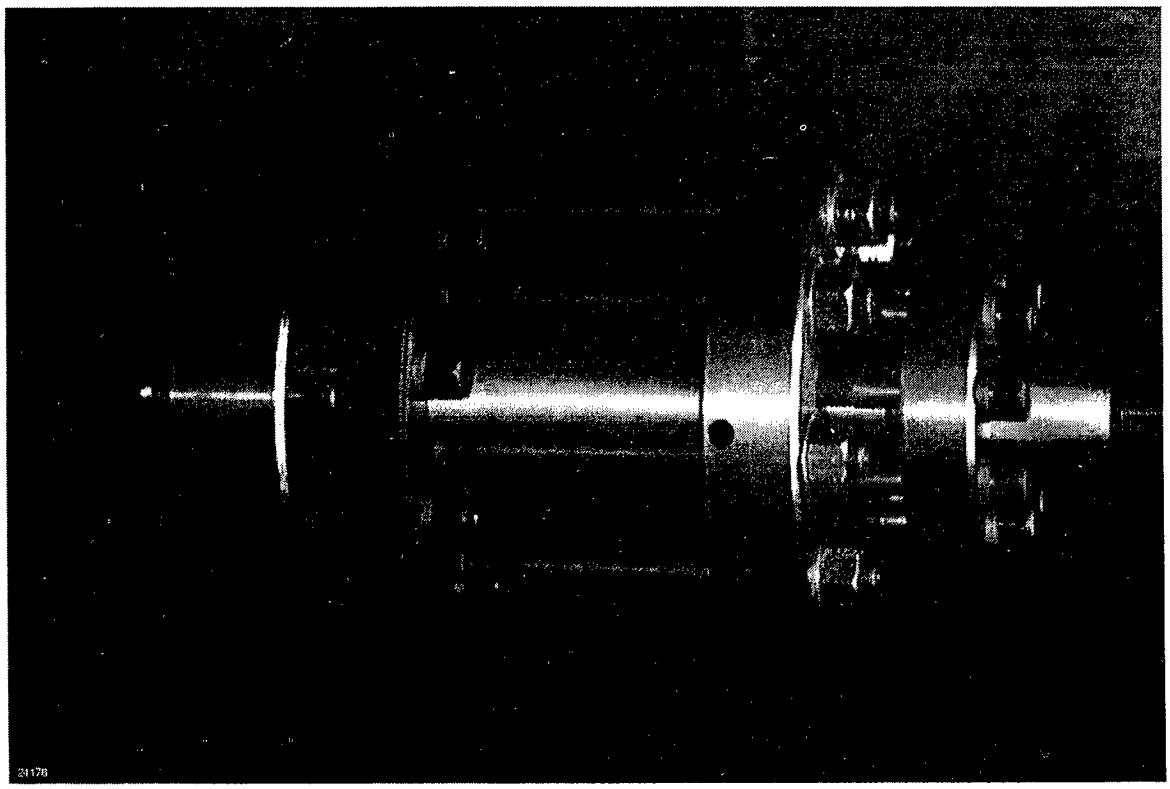

Figure 11. View of the third stage launcher assembly installed on the muzzle of the UDRI 75/30-mm, two-stage, light-gas gun.

Installation and removal of the three-stage launcher components proceeded very smoothly for each test firing. The assembly and alignment of the various launcher components was a simple procedure during preparation for a test firing. Similarly, disassembly of the system was accomplished without much difficulty. During the design

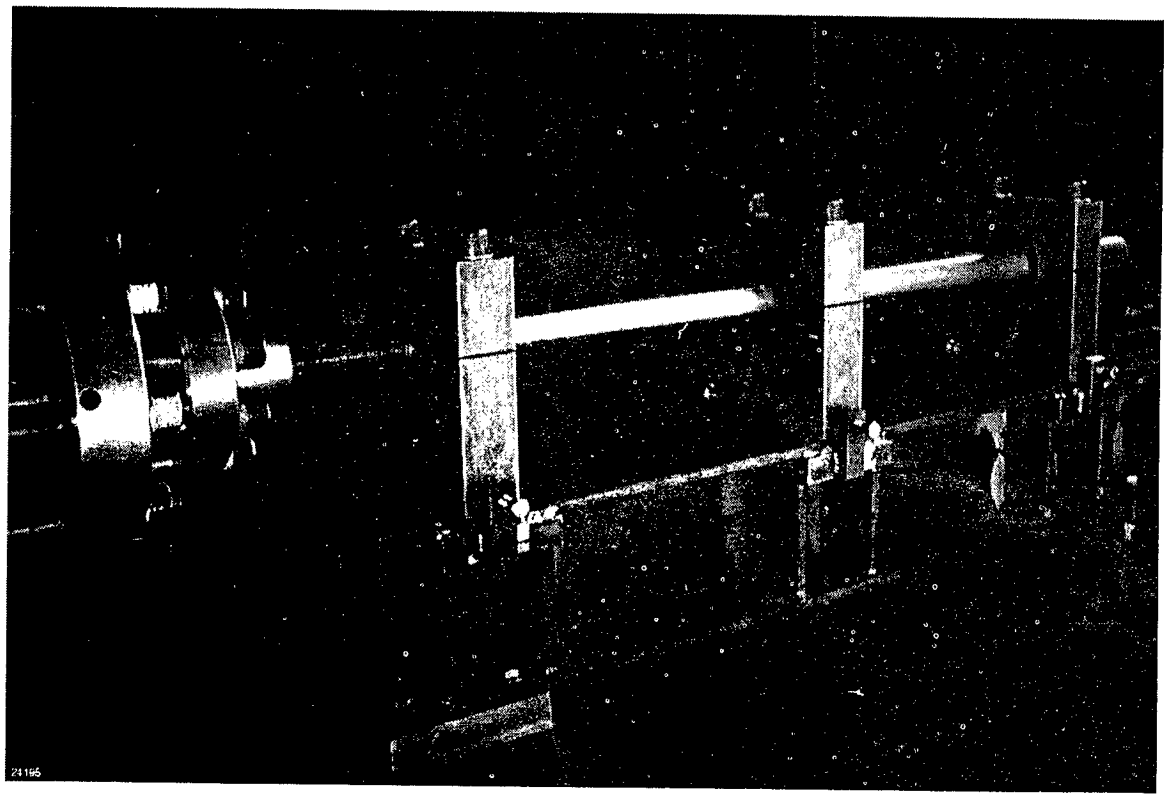

Figure 12. View of the third stage launcher assembly showing the third-stage launch tube and launcher support structure.

of the launcher components, considerable care was given to eliminating or at least minimizing any tendency for the expendable components to "lock up" or deform in a way that would make them difficult to separate after the firing. The separation process was easier than anticipated. As expected, some machine work was required to remove the used injector/cartridge stripper section from the third-stage housing (see Figure 10) and the used 30-mm launch tube extension from the third stage front collar.

B. Cartridge Design

The design, loading, handling, and successful launch of a cartridge filled with high-pressure hydrogen present a number of technical and safety issues that had to be addressed. The cartridge had to be designed to withstand two significant loads. First, it had to safely contain the high-pressure hydrogen. Second, it had to withstand the launch loads. Critical to the cartridge design process was the determination of the peak acceleration that the cartridge will experience during launch. The UDRI 75/30-mm, two-

stage, light-gas gun has pressure transducers installed at eight locations along the 30-mm launch tube. As noted in the previous subsection, the eighth pressure transducer was installed near the muzzle of the 30-mm launch tube for use in this program. The pressure data obtained during each test firing are reviewed to determine the pressure acting on the base of the launch package (projectile and sabot) during launch. The peak acceleration experienced by the package is computed using the peak pressure data and the mass of the launch package. A preliminary cartridge design was made using an estimate of the peak acceleration that was based on previous firings of the 75/30-mm, two-stage, light-gas gun for packages with a mass and velocity near the estimated mass and the desired cartridge velocity.

Because the materials used in the construction of the cartridge are stressed to just below their yield strengths, it was critical that reliable peak pressure data be used to determine the launch loads that would be applied to the cartridge. Several test firings, using cylindrical Nylon slugs as projectiles, were performed to obtain these data and to reduce the uncertainties associated with the estimated values. Design of the cartridge was a rigorous procedure that began with a preliminary cartridge design. Next, two test firings were made to obtain peak pressure data for use during a more detailed and thorough stress analysis of the cartridge components. A third test firing was made to obtain additional peak pressure data for use in performing the final stress analysis and design of the cartridge.

In addition to insuring that the cartridge would safely withstand the internal pressure and launch load requirements, consideration was also given to several operational issues. These were: (1) ease of fabrication of the cartridge components, (2) techniques for sealing the joints between the various cartridge components, (3) procedures used to evacuate and charge the cartridge with high-pressure hydrogen, and (4) sensitivity of the cartridge components to hydrogen embrittlement. These considerations resulted in a design that incorporated a one-piece main body with a screw-on end cap. Since it was desirable to keep the cartridge mass as low as possible, it was hoped that both of these cartridge components could be fabricated from 7075-T6 aluminum, with the seals and valve parts fabricated from other materials.

Since the charge pressure of the cartridge was to be greater than the charge pressure of a standard hydrogen bottle, 18.6 MPa (2,700 psi), a pressure intensifier system, shown in Figure 13, was designed, fabricated, and used to increase the initial charge pressure of the cartridge and intensifier system to the operational charge pressure. The pressure intensifier system can develop a pressure of 103.4 MPa (15,000 psi) and is easy to operate. The end cap of the cartridge contained a port for use in making the connection to the pressure intensifier system, and through it, to a vacuum pump and a standard bottle of hydrogen.

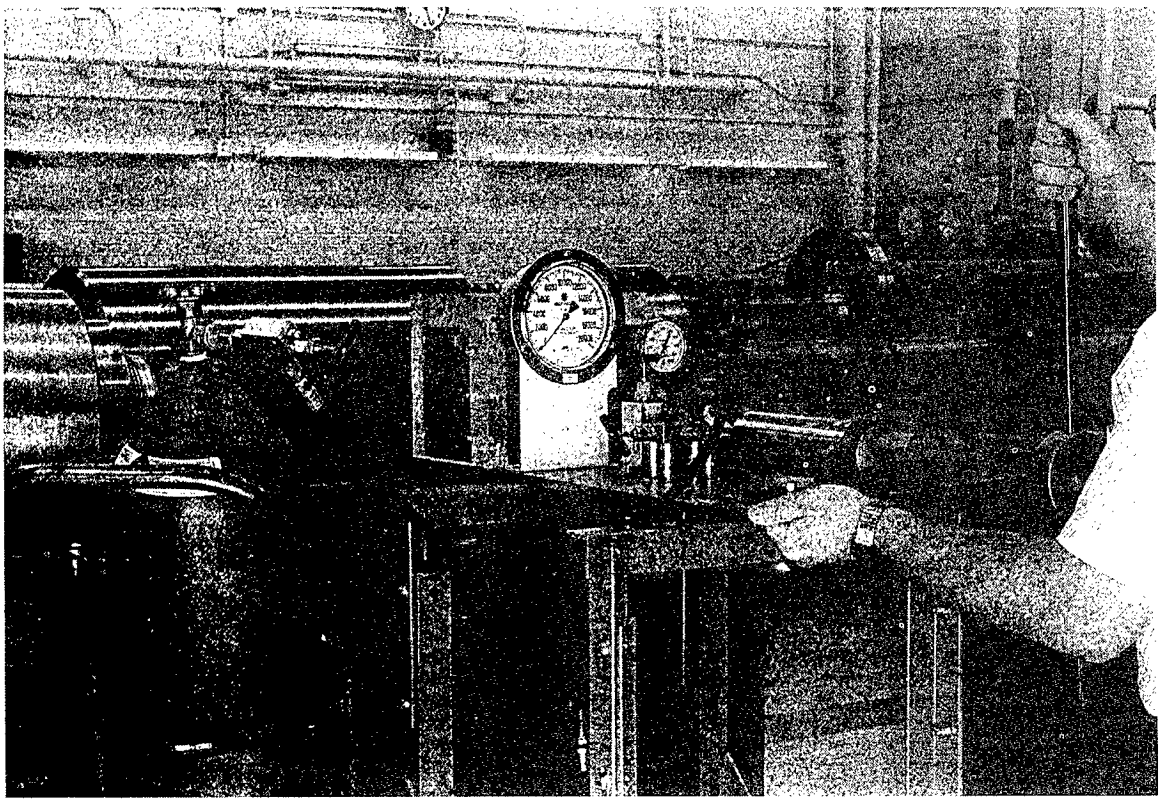

Figure 13. View of the pressure intensifier system being used to charge a cartridge in preparation for a test firing.

The results of the initial set of parametric sensitivity studies indicated that the cartridge used for the initial test firings of the launcher would have an internal volume of 41 cm^3 (2.5 in^3) and a charge pressure of 41.4 MPa (6,000 psi). The nominal insertion velocity of the projectile (and cartridge as it entered the third stage of the launcher) was determined to be 4.5 km/s. The projectile selected for use in the initial test firings was a

5.54-mm-diameter, 5.54-mm-long Nylon cylinder with a mass of 0.153 g. The mass of the cartridge used in the initial parametric sensitivity study was 50 g and was based on a preliminary design of the cartridge. Using the values given, the model predicted a final projectile velocity of 12.0 km/s. Our experience with the comparison of nominal to predicted launch velocities indicated that the actual projectile velocity should be about 9.6 km/s for these conditions.

Since previous firings of our 75/30 mm two-stage, light-gas with this launch package mass were conducted at velocities below 4.5 km/s, the pressure data needed to determine a reliable peak acceleration were not available. Test firings using Nylon slugs were made to obtain these data and provide accurate peak acceleration data for use in the revised design of the cartridge. Two test firings using Nylon slugs with a mass of 48 g were performed. The measured velocities for the slugs in these test firings were 4.58 and 4.62 km/s; the peak projectile base pressures were 292.4 MPa (42,400 psi) and 318.6 MPa (46,200 psi), respectively. For the revised cartridge design, a peak acceleration of 456,000 g's was used to determine the launch loads. An internal pressure of 43.4 MPa (6,300 psi) or 1.05 times the operating pressure was used as the design pressure.

During the second design of the cartridge, it was clear that 7075-T6 aluminum could not be used for the end cap since the launch-load stresses in the end cap were in excess of those capable of being carried by 7075-T6 aluminum. Consequently, titanium 6-4 was selected for use in further design of the end cap. This change in materials added approximately 10 g to the nominal mass of the cartridge, and required a corresponding reduction in the nominal launch velocity of the cartridge to about 4.3 km/s. This reduction in the cartridge launch velocity did not significantly affect the nominal performance of the three-stage launcher system. The increase in the total mass of the cartridge did require a third test firing using a heavier Nylon slug. In that test firing, a Nylon cylinder with a mass of 60 g was fired at a velocity of 4.26 km/s. The peak projectile base pressure for the test was 280.7 MPa (40,700 psi). This peak pressure and nominal cartridge mass were used to determine that the peak acceleration to be used for the final design of the cartridge was 360,000 g's. The design internal pressure used for the final design of the cartridge was 43.4 MPa (6,300 psi) or 1.05 times the operating pressure.

A view of an assembled cartridge is shown in Figure 14. An exploded view of a cartridge is shown in Figure 15. The walls of the cartridge body are tapered to accommodate the large compressive loads generated during the launch of the cartridge. The cartridge body has a toriconical head with an integral gallery to hold the projectile. Head designs using several angles were evaluated. The design selected for incorporation in the aluminum cartridge body uses a head with a 45 degree angle (measured with respect to the cartridge center line). The titanium end cap contains an integral valve used during evacuation of the cartridge, during charging, and to seal the cartridge after the hydrogen charge has been pressurized. The cartridge is guided down the bore of the second-stage launch tube by Nylon bore riders installed at the front and the rear of the cartridge. Details of the shape of the cartridge components shown in Figure 2 are representative of those used in the final design.

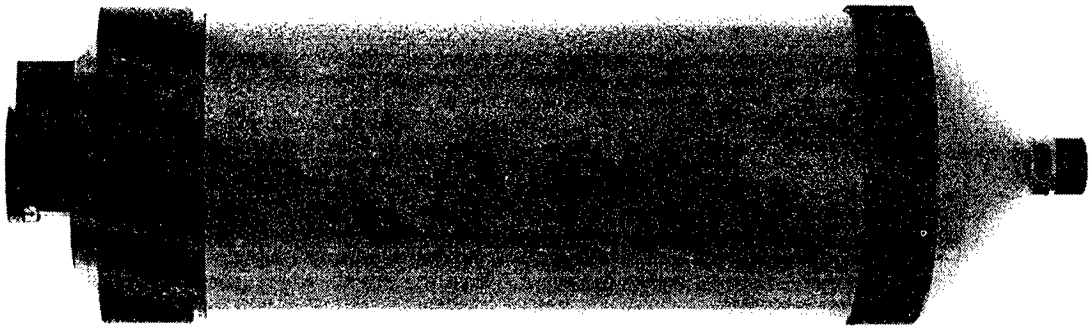

Figure 14. View of an assembled cartridge with a projectile in the integral front gallery.

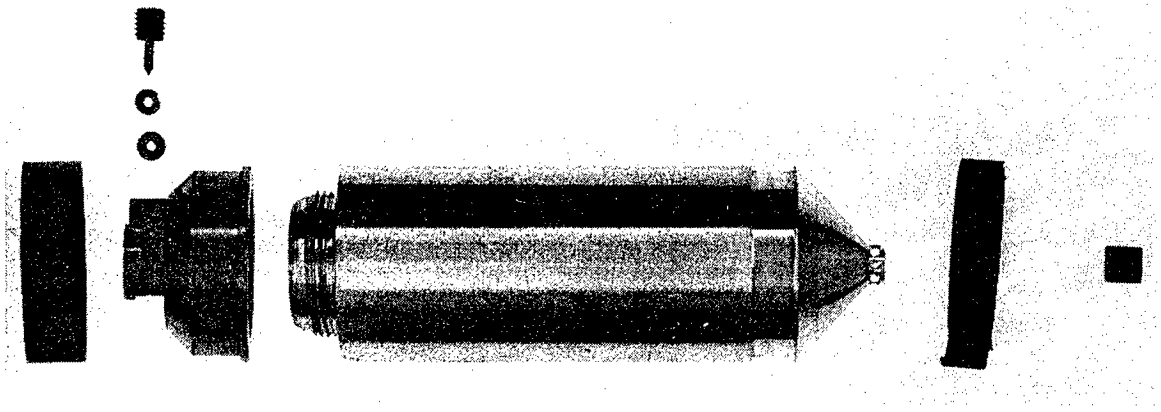

Figure 15. Exploded view of a cartridge showing all of its components.

During the proof testing and the test firings of pressurized cartridges, a number of minor modifications were made to the final cartridge design. These modifications were made to overcome difficulties encountered during the filling and the charging of the cartridges and possible failures of components during the test firings. The details of each of these modifications will be given during the review and discussion of test results presented in the next section.

SECTION IV. TEST RESULTS

To minimize the risk to the range hardware during the test firings of the completed launcher system described in the previous section, the following test philosophy was used to insure that unexpected and/or preventable failures or damage did not occur. First, two completed cartridges were proof tested to determine their burst strength. When it was assured that the cartridges would safely hold the charge pressure without failing or leaking, pressurized cartridges were test fired in the two-stage gun to insure that they could withstand the additional stresses imposed on them during their launch. After a pressurized cartridge was launched successfully, pressurized cartridges were fired in the assembled three-stage launcher system to evaluate the performance of the launcher. By performing the test sequences in this order, it was possible to minimize the number of parameters to be considered when determining the probable cause(s) of failure(s) that could occur during each test firing. The results of the proof tests of two cartridges and the results of eight test firings of pressurized cartridges are presented in the first part of this section. This section concludes with a detailed presentation of the results of the seven test firings of the completed three-stage launcher system.

A. Cartridge Test Results

1. Proof Tests. The pressure intensifier system shown in Figure 13 was used to proof test and determine the burst strength of the cartridges. The tests were performed in the open and used a short piece of high-pressure tubing to attach the cartridge (via the port and valve in the titanium end cap) to the pressure intensifier system. The proof pressure for the cartridges was arbitrarily selected to be 44.8 MPa (6,500 psi). The cartridges were proof and burst tested using water as the working fluid and the following test procedure. First, the cartridge was installed on the pressure intensifier system and evacuated. Next, the system (with the cartridge attached) was sealed, the vacuum pump was removed, and the intensifier system and cartridge were filled with water. The water was slowly drawn into the system and cartridge from an open supply container through a flexible piece of tubing that was temporarily attached to the main supply port and valve of the pressure intensifier system. Finally, the supply port valve was closed and the hand-

operated pressure generator was used to slowly increase the pressure in the intensifier system and the cartridge.

The first attempt to proof and burst test the cartridge required a redesign of the seal used around the stem of the valve incorporated in the titanium end cap. While the original seal allowed the cartridge to be evacuated, it leaked when a pressure of about 6.9 MPa (1,000 psi) was applied during the proof test. The original seal was a tubular piece of Teflon whose bore diameter was 0.025 mm (0.001 inch) smaller than the diameter of the valve stem and whose outside diameter was 0.025 mm (0.001 inch) larger than the bore of the valve body. The redesigned valve stem seal consisted of a rubber "O" ring with an aluminum backup ring and did not require any modification of the titanium end cap or the valve stem. During the initial proof test, the Teflon seal between the aluminum cartridge body and the titanium end cap did not leak.

The redesigned valve stem seal did not leak during the proof test but the front of the aluminum cartridge body failed at a pressure of about 23.4 MPa (3,400 psi). In the first design, the cartridge body employed a flat head to simplify the fabrication of the cartridge body and to minimize the weight of the cartridge, particularly at the front end, to reduce the launch loads imposed on the base of the cartridge. All other components of the cartridge did not show any signs of excessive loading.

The front end of the cartridge was redesigned to use a toriconical head (cone head with a knuckle) [13] to reduce the stress concentrations in the cartridge body end. Toriconical head designs that used several cone angles were evaluated. The design selected for incorporation in the redesigned aluminum cartridge body used a head with a 45 degree angle (measured with respect to the cartridge center line). However, the use of the toriconical head added approximately 2.1 g to the total mass of the cartridge. This additional mass increased the longitudinal stresses in the wall of the cartridge body during launch. An aluminum cartridge body with a toriconical head was fabricated and proof and burst tested. The redesigned cartridge body successfully held the proof pressure. The cartridge was then burst tested by slowly increasing the internal pressure until the cartridge failed. Failure occurred when the internal pressure reached 56.5 MPa (8,200

psi). The head of the cartridge simultaneously separated from the cartridge body and the cartridge ruptured along the length of the body. A view of the failed cartridge body is shown in Figure 16. All other components of the cartridge did not show any signs of excessive loading and the cartridge design was judged ready to be test fired to determine its ability to withstand the launch loads.

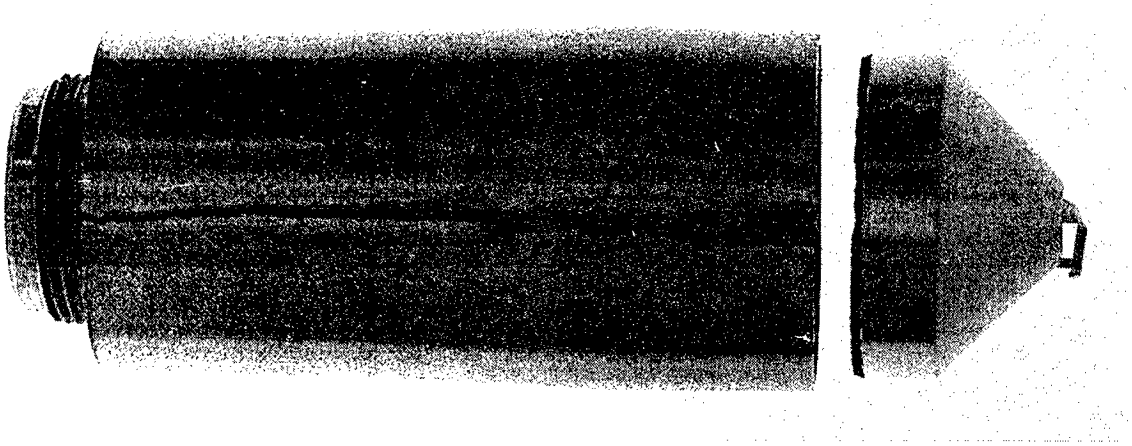

Figure 16. View of a cartridge body that failed at an internal pressure of 56.5 MPa (8,200 psi). Note the longitudinal crack along the length of the body and the complete separation of the toriconical head from the cartridge body.

2. Test Firings. The purpose of this series of test firings was to determine that a complete cartridge, pressurized with hydrogen and loaded with a Nylon projectile, could be launched and remain intact. The cartridge must be launched pressurized since the longitudinal tensile stresses in the cartridge walls due to the internal pressure of the hydrogen charge are used to partially offset the compressive stresses that develop in the cartridge walls during launch. Verification of a successful launch was accomplished using the instrumentation that was installed on the range. This instrumentation consisted of pressure transducers, laser-photodetector velocity stations, flash x-rays, and aluminum witness plates. The use of this instrumentation is described in the following paragraphs.

The eight pressure transducers installed in the 30-mm launch tube were used to monitor the pressure acting on the base of the cartridge during launch. The time required for the cartridge to move from the location of the seventh pressure transducer to the

location of the eighth pressure transducer (the two nearest the muzzle end of the 30-mm launch tube) was used to determine the cartridge velocity. In this series of test firings, the velocities determined using the pressure transducer data were compared with the velocities measured using the four laser-photodetector stations that were installed downrange of the 30-mm launch tube. When the third stage of the launcher was installed on the range, these laser-photodetector stations were used to determine the velocities of the small nylon projectiles that exited the third stage of the launcher. In the three-stage operation of the range, data taken from the seventh and eighth pressure transducers provided the only means of determining the cartridge velocity as the cartridge entered the third stage of the launcher.

During the test firings described in this report, redundant instrumentation system triggers were used for all of the tests. After each test, however, all data obtained from the test firing were examined and changes to the instrumentation were made, as required, following the examination. Two sets of flash x-rays were used determine the post-launch condition of the cartridges during the test firings of the cartridges. The first flash x-ray station was located about 30 cm downrange of the muzzle of the 30-mm launch tube. The second set of flash x-rays was an orthogonal pair at the downrange end of the instrumentation section that was located just ahead of the target chamber. Two techniques were used to trigger the firing of the flash x-ray used at the muzzle of the 30-mm launch tube. A laser-photodetector trigger system was set up at the muzzle. Passage of the cartridge through the laser beam directed into the photodetector generated a signal that was used, with time delay generators, to fire the flash x-rays when the cartridge was in flight, under the x-ray source, and over the film. The signal produced by the pressure transducers was also used, with time-delay generators, to trigger the firing of the flash x-rays to obtain these radiographs.

The fourth laser-photodetector system in the velocity measuring system was located just up range of the target chamber and used a "laser ladder" instead of a single laser beam to probe the region on either side of the shot-line axis. This "laser-ladder"-photodetector system generated the trigger signal used to "fire" the flash x-rays and obtain a pair of radiographs of the cartridge just before it struck an aluminum witness plate. The

aluminum-sheet witness plates were used to provide a record of the condition of the cartridge after its launch in the event the radiographs were not obtained and were installed up range of a large steel block used to stop the cartridges.

The third test firing of the large Nylon slug was made with the 30-mm launch tube extension installed on the end of the 30-mm launch tube. This test firing was made to obtain pressure data for determining the peak acceleration experienced by the cartridge and to evaluate the quality of the joint between the 30-mm launch tube and the 30-mm launch tube extension. Coincident with the evaluation of the quality of the joint, a test of the laser-photodetector trigger system was conducted. The laser beam passed through a small hole in the extension to illuminate the photodetector and provide a trigger for the muzzle x-ray source and the velocity and pressure recording equipment used for this test and subsequent cartridge and launcher tests.

Because of blow-by and leakage of gasses, the passage of debris, or a blockage of the beam when the gun recoiled, the laser-photodetector system produced a trigger signal before the cartridge reached the laser beam. The projectile velocity was obtained using the backup trigger provided by the first of the four laser-photodetector stations used to measure projectile velocity. The diameter of the hole that was used to allow the laser beam to pass through the launch tube extension, normal to the bore of the extension, was increased significantly for use in the test firings of the three-stage launcher. The third test firing with the Nylon slug indicated that a slight modification of the alignment boss on the extension was needed and a different method of aligning and checking the alignment was used when the extension was installed during preparations for a test firing of the three-stage launcher. The launch tube extension was not used during the test firings of the pressurized cartridges since the objective of the tests was to determine the "launchability" of the cartridge.

During the test firings of the pressurized cartridges, the peak base pressure measured at each of the launch-tube pressure transducers was used to determine the peak acceleration of the cartridge. The measured muzzle velocity of the Nylon slug used for the third test firing was 4.26 km/s and the peak projectile base pressures measured at the

first five pressure transducer stations are presented in Table 2. This velocity and these pressure data were the standard for the comparison of data from the test firings of pressurized cartridges.

TABLE 2

BASE PRESSURES FOR THIRD TEST FIRING OF A NYLON SLUG

Pressure Transducer	*Distance from Breech, (m)*	*Peak Pressure, (MPa)*	*Peak Pressure, (psi)*
LT1	0.305	248.9	36,100
LT2	0.559	280.7	40,700
LT3	0.813	253.8	36,800
LT4	1.321	257.9	37,400
LT5	2.337	168.3	24,400

As a safety measure, the cartridges were filled and charged with hydrogen after they were loaded in the gun. The pressure intensifier system was used with a vacuum pump to evacuate the cartridge and test it for leaks. The cartridges were evacuated to less than 1mm Hg before the hydrogen was introduced from a standard industrial size bottle of gas at a pressure of about 18.6 MPa (2,700 psi). High-pressure lines, valves, and pressure gages that were a part of the pressure intensifier system were used to direct and control the flow of hydrogen into the cartridge. The hand operated pressure generator was used to increase the pressure of the initial charge of hydrogen to the final charge pressure.

Eight test firings of pressurized cartridges were performed to insure (1) that the cartridge functioned as designed, (2) that it could be launched, and (3) that it remained intact. The results of these tests are summarized in Table 3. In all eight tests shown in this table, the cartridges were charged to a pressure of 41.4 MPa (6,000 psi). The nominal velocity for the first two tests was 4.3 km/s and was lowered for the last six tests. In Table 3, the mass of the hydrogen charge was computed using the equation of state for a perfect gas. The volume of the cartridge was determined by weighing the cartridge empty and after it had been filled with degassed water. The ambient room temperature and the nominal charge pressure were used in the calculation.

TABLE 3

RESULTS OF TEST FIRINGS OF PRESSURIZED CARTRIDGES

All cartridges were charged with hydrogen at 41 MPa (6,000 psi). The filled cartridge mass includes the mass of the hydrogen charge and a projectile with a nominal mass of 0.153 g.

Shot Number	*Filled Cartridge Mass, (g)*	*Hydrogen Charge Mass, (g)*	*Cartridge Velocity, Nominal (km/s)*	*Cartridge Velocity, Measured (km/s)*	*Measured Peak Base Pressure, (MPa)*	*Measured Peak Base Pressure, (psi)*
8-0132	60.8235	1.4175	4.30	3.89 (?)	258.2	37,452
8-0133	60.8355	1.4175	4.30	4.23	292.0	42,364
8-0134	63.4808	1.3493	4.10	4.12	257.9	37,414
8-0135	62.7883	1.3565	3.75	3.83 (?)	>190.4	>27,628
8-0136	65.8149	1.3274	3.15	3.13	131.1	19,016
8-0137	64.2200	1.3351	3.00	3.01	110.0	15,963
8-0138	65.9590	1.3340	2.50	2.52	80.4	11,665
8-0139	64.9769	1.3346	2.50	2.70	108.5	15,738

The cartridges used in the first seven test firings failed during their launch. The test firing of the eighth cartridge was successful. In some cases the failures were catastrophic and the cartridges exited the launch tube in several pieces. Because the cartridges were broken up, an exact determination of the muzzle velocity the cartridge was not always possible. In addition, the in-bore failures of the cartridges produced erroneous trigger signals and caused pre-triggering of the flash x-ray located at the muzzle of the launch tube. Consequently, radiographs of the cartridges were not obtained for the first five test firings. The muzzle velocity was reduced incrementally for the last six tests to reduce the launch loads imposed on the cartridge and to produce a successful launch of a cartridge.

The pressure data taken at various positions along the launch tube for the first two test firings, Shots 8-0132 and 8-0133, indicated that the cartridge failure occurred early in the launch cycle and that the cartridges probably came apart catastrophically. An analysis of the probable cause of failure for these cartridges indicated that it was likely that the cartridge walls came in contact with the bore of the launch tube as they traveled down the tube during launch. Frictional heating resulting from this contact reduced the yield

strength of the aluminum and promoted the subsequent failure of the cartridge. Consequently, the cartridge wall cross section and thickness were increased slightly and the outside diameter of the cartridge body was reduced to increase the clearance between the outside diameter of the cartridge wall and the bore of the launch tube. The slightly thicker cartridge wall and the increased diametral clearance were used with the cartridges fabricated for use in all subsequent test firings of the cartridges. Because of the slight increase in the mass of the cartridge resulting from the changes in the cartridge wall design, the nominal muzzle velocity for the next test firings was reduced from 4.30 km/s to 4.10 km/s

The in-bore pressure measurements obtained from Shot 8-0134 indicated that the cartridge may have survived the launch, but the flash x-ray at the muzzle of the gun pre-triggered and a radiograph of the cartridge was not obtained. The failure of the cartridge for Shot 8-0132 did not damage the bore of the launch tube; however, the bore of the 30-mm launch tube was damaged (pitted) and required considerable honing after Shots 8-0133 and 8-0134. During the posttest examination of the bore of the launch tube following Shot 8-0134, several strands of polyethylene (from the piston) were observed protruding from the port of the second pressure transducer, LT2. Several aluminum chips and shavings were embedded in the polyethylene strands. The aluminum chips were analyzed to determine their chemical composition. The chips could have come from the 6061-T6-aluminum rod that was used during the cleaning and honing of the 30-mm launch tube or from the 7075-T6-aluminum cartridge. The chemical analysis indicted that the chips contained 5 to 6 percent zinc, an element found in 7075 aluminum but not in 6061 aluminum. Clearly, some portion of a cartridge wall had come in contact with the bore of the 30-mm launch tube during a test firing. However, it was not clear whether the chips came from the second or third test firing.

Because the radiographs of the cartridge taken at the muzzle of the 30-mm launch tube were essential for verifying the integrity of the cartridge, the trigger for the muzzle x-ray was changed for Shot 8-0135. Instead of using the laser-photodetector system that was installed just beyond the muzzle of the 30-mm launch tube, the amplified signal from pressure transducer, LT7, located about 225 mm from the muzzle of the launch tube, was

used to trigger the x-ray for Shot 8-0135. In addition, the nominal launch velocity of the cartridge was lowered to 3.75 km/s in an attempt to reduce the launch loads and to have a successful test firing. The muzzle x-ray pre-triggered for Shot 8-0135 and a radiograph of the cartridge was not obtained. Although the witness plate indicated that the cartridge was in a number pieces when it impacted the witness plate, the in-bore pressure data indicated the cartridge may have been launched intact but broke up during its flight downrange. Failure of a cartridge after its exit from the 30-mm launch tube was possible since considerable energy is stored in the cartridge walls as they are compressed during launch. The sudden release of the stored energy as the cartridge leaves the launch tube could produce a failure in the threaded joint between the aluminum body of the cartridge and the titanium end cap. This kind of failure would not occur in a three-stage launcher firing since the cartridge would always experience a positive acceleration while in the launcher.

Following an analysis of the results of Shots 8-0132 to 8-0135, two small changes were made in the design of the cartridge. These changes were incorporated in the cartridges fabricated for use during the remainder of the test program. In the first change, the front section of the cartridge was modified to hold the front bore rider captive in a groove just behind the knuckle of the toriconical head. Captivation of the front bore rider insured that this bore rider stayed in place during the launch and was not blown off by propelling gas that may leak around the rear bore rider. In the second change, the lengths of the transition regions between the "normal," tapered, interior surface of the cartridge and the reduced diameter sections at the front and rear end of the cartridge were increased (see cross section in Figure 2). The addition of the extra material in these transition regions permitted these portions of the cartridge wall to safely withstand higher launch stresses, but increased the mass of the cartridge body. The nominal muzzle velocity of the cartridge was reduced to 3.15 km/s for test firings using this slightly heavier cartridge.

The measured cartridge velocity for Shot 8-0136 was 3.13 km/s. The amplified signal from pressure transducer LT7 was used to trigger the muzzle x-ray for this test. The x-rays fired about 560 μs before the arrival of the cartridge. Multiple holes in the witness plate placed downrange indicated the cartridge had come apart during launch or

while in flight. However, an excellent set of pressure and laser-photodetector data was obtained from the test. A thorough analysis of these data indicated that the pressure transducer LT6A, located 305 mm up range of pressure transducer LT7, could provide a more reliable trigger for the x-rays. Pressure transducer LT6A was used as the x-ray trigger source for the next three test firings and radiographs of the cartridge in flight were obtained for the last three firings.

The measured cartridge velocity for Shot 8-0137 was 3.01 km/s. The radiograph of the cartridge in flight showed that a longitudinal crack had formed in the aluminum body. As the crack opened, the rear portion of the cartridge bulged severely. The crack split as it entered the knuckle at the base of the conical head of the cartridge. In the radiograph, the head was intact and the projectile remained in place in the small gallery at the front of the cartridge. It was assumed that the failure initiated at the base of the cartridge, where the cartridge wall was the thickest and the launch loads and stresses were the highest.

An analysis of the loads and stresses experienced by the base of the cartridge during launch indicated that the cartridge should have had excess load carrying capability, since the peak pressures associated with the reduced velocity launches were significantly below the design maximum values. However, a transient increase in the hydrogen pressure could occur at the rear of the cartridge as a result of inertial effects imposed by launch accelerations and temporarily increase the hoop stresses in the base of the cartridge. It was estimated that the hydrogen pressure could increase by slightly more than 8 percent in the rear part of the cartridge during the peak acceleration. The increased cartridge wall thickness at the rear of the cartridge should have easily accommodated a pressure increase of this magnitude.

Further investigation into probable causes of the failure of the cartridge bodies revealed that, in the presence of a 68.9 MPa (10,000 psi) hydrogen environment, the yield strength of 7075 aluminum was about 68.9 MPa (10,000 psi) less than it was in a one-atmosphere air environment [14]. In addition, use of the measured burst pressure of the cartridge to back out the yield strength of the aluminum used for the cartridges indicated

that the design yield strength was about 15 percent higher than the "measured" yield strength. These two factors undoubtedly worked to reduce the strength of the cartridge bodies and contribute to the unexpected failures of the cartridges.

Pressurization of the cartridge caused a radial expansion of the cartridge walls. Since this expansion also occurred in the region of the front bore rider, significant increases in the axial load imposed on the walls and base of the cartridge could occur as a result of increased frictional loads between the bore rider and the wall of the launch tube. The increase in frictional loads, at least during the early stages of the launch process, was difficult to estimate. The static breakaway load could be measured but would require working with a part of the pressurized cartridge exposed. It was assumed that the failures of the cartridges experienced thus far were due to a combination of apparent overloads that were not accounted for in the design stress analyses and that the increased frictional load was the most likely load not included in the analyses. Accordingly, the outside diameter of the front bore rider was decreased in the attempt to have the expanded cartridge and bore rider just fit the bore of the launch tube following pressurization of the cartridge. A good fit was critical in this region since the outer surface of the bore rider held the cartridge concentric with the injector section of the third stage. Too loose a fit would cause an eccentric location of the projectile and too tight a fit would increase the loads imposed on the cartridge. Reduced-diameter front bore riders were used for the remainder of all test firings.

The cartridge for Shot 8-0138 was fired at a velocity of 2.52 km/s. The muzzle radiograph of the cartridge showed the rear of the cartridge to be intact. However, it also showed a shear-type failure in the region just behind the front bore rider. The failure extended approximately one quarter of the way around the cartridge and produced a petal of cartridge wall material that had moved away from the front of the cartridge. Examination of the radiograph of the cartridge showed that the length of the transition region between reduced diameter section for the front bore rider and the "normal," tapered, interior surface of the cartridge was about two and a half times longer than it should have been. The length of this band of thicker material caused significant stress concentrations at the transition from thin wall to thick wall due to localized differences in

the radial expansion of the cartridge walls and produced a shear failure at that location. The inspection of the cartridges machined after Shot 8-0138 included an x-ray of the aluminum cartridge body in order to determine that the bodies were machined correctly.

The cartridge for Shot 8-0139 was fired at a velocity of 2.70 km/s. The radiograph of this cartridge showed the rear of the cartridge to be intact with the projectile in position at the front of the cartridge. The successful launch of this cartridge concluded the test firings of pressurized cartridges.

B. Launcher Test Firings

The three-stage launcher system was installed in the blast tank of the 75/30-mm, two-stage, light-gas gun as shown previously in Figures 11 and 12. Eight test firings of the three-stage launcher were made with the launcher design shown in Figure 10. The configuration of the internal components was modified for use without a cartridge for one of the test firings. The results of this test firing are described in the next section of this report. In the seven test firings that used a cartridge, the intact projectile was successfully transferred from the cartridge to the third stage launch tube in each of the tests. However, minimal augmentation of the projectile's velocity occurred during each of these firings. A 5.54-mm-diameter, 5.54-mm-long Nylon cylinder with a nominal mass of 0.153 g was used as the projectile for the seven test firings. Radiographs of the projectile in flight were obtained for the last six test firings.

The critical internal components of the third stage of the launcher system were shown in Figure 2. The nomenclature used in this figure will be used for the remainder of this section. The shape and relationship of the second-stage launch tube extension, or simply, the extension, and the third-stage injector section, or injector, was shown in Figure 2 as they were configured for the first test firing. The shape of the end of the extension and the injector were changed for each of the test firings. The cartridges used for the test firings were shaped as shown in Figure 14 and featured the design modifications that were incorporated as the cartridge and launcher test firings progressed. The extension and injector configurations that were used for the seven test firings are presented and described in the remainder of this section. After the launcher was disassembled following

the test firing, the extension and injector were sawn open to expose their interior and to examine the changes in their configuration that were produced during the test firing. Scaled drawings of the pre-test and the posttest features of the extension, the injector, and their relationship to one another are presented in the figures that follow.

The instrumentation used to obtain the data that were examined in the evaluation of the performance of the launcher was essentially the same instrumentation used during the test firings of the cartridges with the following changes. The flash x-ray head at the muzzle of the 30-mm launch tube was removed. A second pair of orthogonal flash x-ray heads was installed in the instrumentation section of the range to obtain two views of the projectile in flight. The velocity of the pressurized cartridge was determined using two pressure transducers, LT6A and LT7. These pressure transducers were installed 65 and 35 cm, respectively, up range of the breech end of the injector section. The nearly instantaneous exposure of the pressure transducers to the hydrogen gas driving the cartridge produced a sudden rise in the output signals of these two pressure transducers. The velocity of the cartridge was computed by dividing the distance between the pressure transducers by the time between the sudden rise in their respective output signals.

Projectile velocity was determined using three laser-photodetector systems and the laser-ladder-photodetector system used to provide the trigger signal for the flash x-rays in the instrumentation section of the range. These laser-photodetector systems were located approximately 2, 57, 161, and 222 cm from the muzzle of the third-stage launch tube. The passage of the projectile (or other object) through the laser beam caused the output signal of the photodetector to drop. The time of the passage of the projectile through each laser-photodetector system was recorded using digital data acquisition systems. The velocity of the projectile was determined by simply dividing the distance between any two of the laser stations by the time of flight between the stations.

The signals produced by the laser-photodetector systems were "clean" and sharp for all test firings. Agreement between measurements made using several combinations of the laser-photodetector stations was excellent (within 10 m/s of the mean of the measured velocities). Measurement of the cartridge velocity was not as precise but errors were less

than ± 45 m/s of the reported value. Because the cartridge continued to accelerate after passing the pressure transducers, the actual injection velocity was slightly higher than the measured velocity. However, the probable difference between the measured and the actual injection velocity was within the measurement error. Consequently, the cartridge injection velocity was assumed to be the velocity measured using the pressure transducers.

Aluminum witness plates were installed at the downrange end of the target chamber, about 2.5 m from the muzzle of the third-stage launch tube. These plates were made from 2.03-mm-thick, 6061-T6-aluminum sheet. The two orthogonal pairs of flash x-rays were located just in front of the witness plate and used to "record" the condition of the projectile before it impacted the witness plate. Since the velocity of the projectile was unknown, each pair of flash x-rays was allowed to expose the full length of the film. The resulting double exposure, with appropriate delays in the firing pulse of the x-ray heads, would produce two views of the projectile for a wide range of impact velocities and one view for velocities that were above or below the velocity range that produced two images. The witness plate was used to record the location of the impact site and to provide an indication of the amount of debris that traveled downrange with or behind the projectile.

The results of the seven test firings using the three-stage launcher are presented in Table 4. During the test firings, an atmosphere of nitrogen with an ambient pressure of 5 mm Hg was maintained inside the blast tank.

Because the actual projectile velocity was well below the anticipated projectile velocity for Shot 8-3140, the x-rays fired before the projectile was in a position to have its shadow captured on film. The hole left in the witness plate indicated that the projectile was intact when it struck the aluminum sheet. Several small pieces of debris, probably from the front section of the cartridge, also struck the plate producing a number of small craters and three small holes. As shown in Figure 17, the nose of the injector was a cone with its apex pointing up range. In this figure and those that follow, the projectile enters the injector from the bottom of the figure and leaves the injector at the top of the figure. The half angle of the cone was 60 degrees. Although this "reverse" cone angle is not

TABLE 4

RESULTS OF TEST FIRINGS OF THREE-STAGE LAUNCHER

All cartridges were charged with hydrogen at 41 MPa (6,000 psi). The filled cartridge mass includes the mass of the hydrogen charge and the projectile.

Shot Number	*Filled Cartridge Mass, (g)*	*Hydrogen Charge Mass, (g)*	*Projectile Mass, (g)*	*Cartridge Injection Velocity, (km/s)*	*Projectile Velocity, (km/s)*	*Velocity, Augmentation, (km/s)*
8-3140	64.7363	1.3394	0.1529	2.31	2.60	0.29
8-3141	64.6373	1.3420	0.1508	2.63	2.86	0.23
8-3142	64.0809	1.3537	0.1505	2.73	2.73	0
8-3143	63.9754	1.3342	0.1529	2.70	2.82	0.12
8-3144	63.9363	1.3382	0.1502	2.67	2.77	0.10
8-3145	63.9284	1.3373	0.1515	1.75	2.24	0.49
8-3147	64.3813	1.3308	0.1508	1.71	2.11	0.40

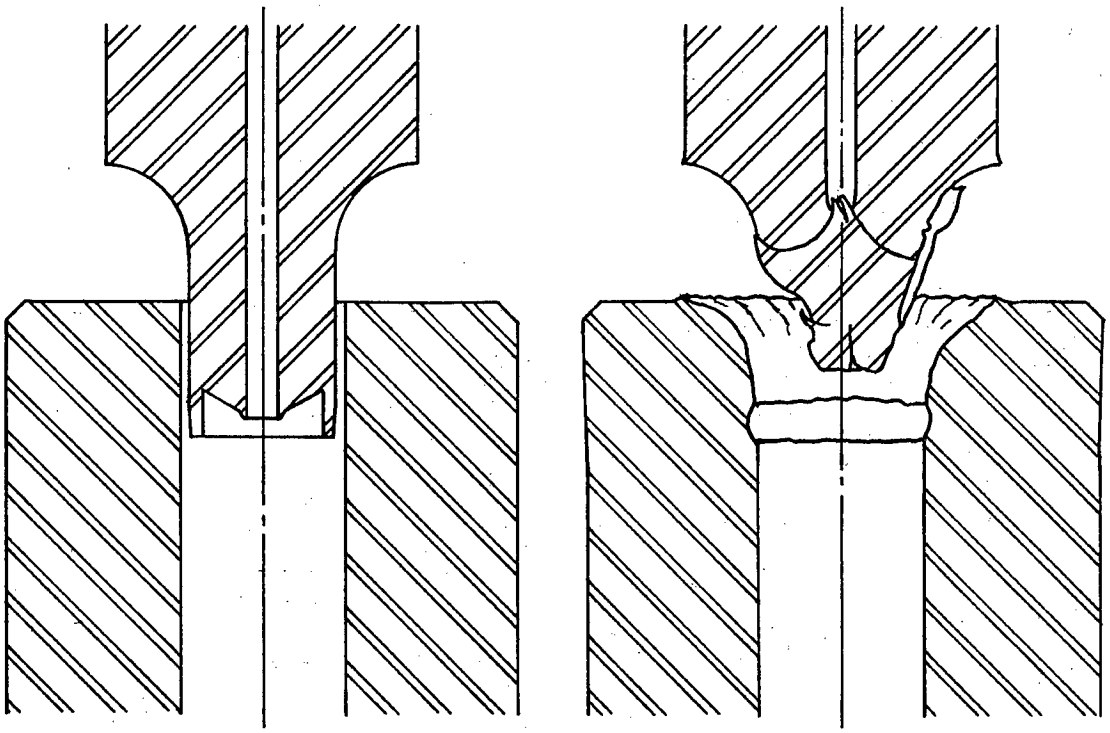

Figure 17. Relationship of the launch tube extension and injector section before and after Shot 8-3140. Note the large shear failures in the root of the injector and the complete closure of the bore of the injector.

conducive to enhancing the flow of hydrogen from the cartridge to the third-stage launch tube, it does promote the flow of the cartridge fragments away from the bore of the launch

tube. The injection of cartridge fragments in the flow stream of the hydrogen would result in reduced performance of the launcher and was to be avoided if possible. Although the projectile velocity augmentation was minimal, this first test firing showed that the projectile could be transferred successfully from the cartridge to the third-stage launch tube and also demonstrated that the launcher system could be easily disassembled after a firing.

The direction of the injector nose angle was reversed for Shot 8-3141 as shown in Figure 18. This was the only change in the configuration of the components used for this test. As shown in Table 4, augmentation of the projectile velocity was slightly less than was obtained for Shot 8-3141. The witness plate, however, showed considerably more damage than for Shot 8-3140, with four large holes, three small holes, and seven deep craters being produced in addition to the hole made by the projectile. The range of the

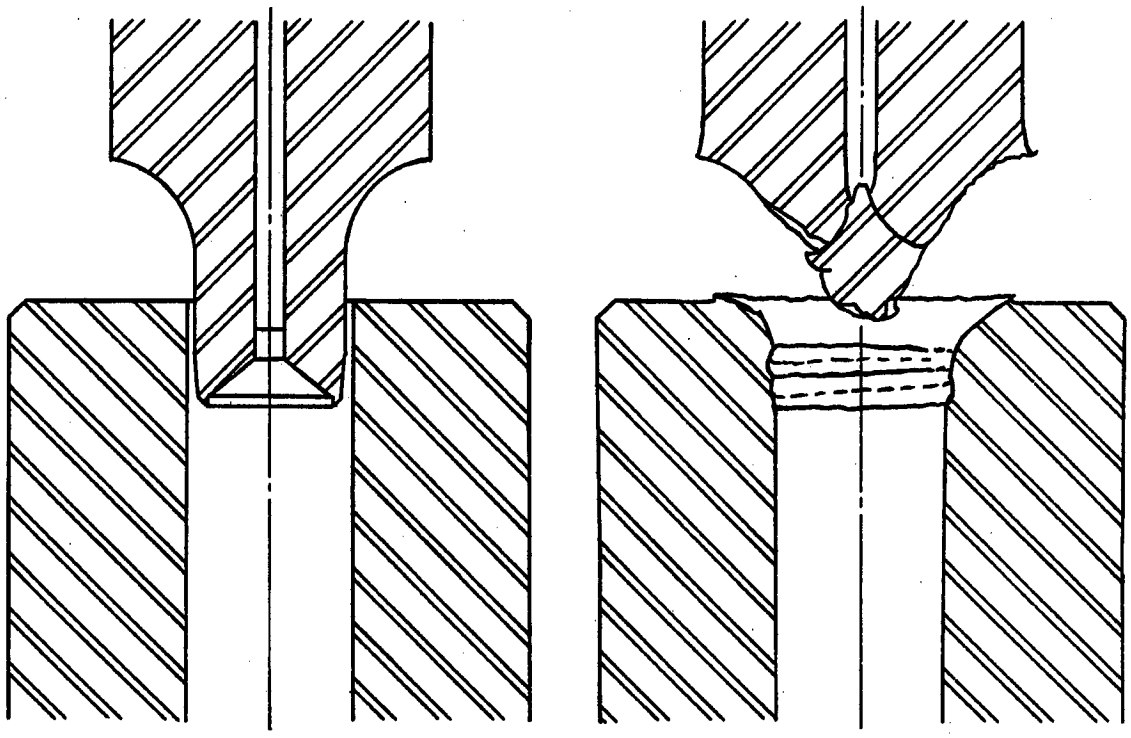

Figure 18. Relationship of the launch tube extension and injector section before and after Shot 8-3141. Note the large shear failures in the root of the injector and the complete closure of the bore of the injector.

anticipated projectile velocities was reduced when computing the delays for the firing of the flash x-rays for Shot 8-3141. As a result, two views of the projectile were obtained in the radiographs. The projectile was intact but slightly elongated. The radiographs did not show any fragments traveling behind the projectile. Evidently, the fragments were at least 9 cm behind the projectile. Again, the projectile was transferred successfully from the cartridge to the third-stage launch tube. Changing the orientation of the apex angle did not produce a noticeable increase in velocity augmentation of the projectile. It did, however, produce a significant increase in the number of cartridge fragments entrained in the hydrogen flowing into the third-stage launch tube.

Choking or any other processes that result in a restriction of the flow of hydrogen from the cartridge to the third-stage launch tube was a major concern for the success of this launcher technique. The highest gas pressures are generated when the rear end of the cartridge approaches the end of the injector and it is vital that the flow of gas is not restricted until the end of the cartridge contacts the injector. The injector sections for Shots 8-3140 and 8-3141 were sawn open to examine the post test condition of the bore of the injector. The bores of the injectors were completely closed for the first 30 mm and the first 20 mm for Shots 8-3140 and 8-3141, respectively. It appeared that the loads imposed by the extrusion of the cartridge walls produced a large inward radial force and a large axial force that combined to cause a shear failure in the walls of the reduced-diameter section of the injector. As a result of the action of these forces, the bore of the reduced-diameter section was closed and the section up range of the shear failure was driven forward 3 to 4 mm. If this closure of the injector bore occurred early in the hydrogen compression process, then the flow of high-pressure hydrogen into the third-stage launch tube was severely restricted or blocked entirely. While not conclusive, the posttest condition of the injector used for these two test firings indicates that the bore of the injector could be closed early in the launch cycle. The outside diameters of the extensions increased by 1.8 mm and 1.3 mm, respectively, evidence of a significant buildup of pressure inside the extension.

The shape of the injector was changed significantly for Shot 8-3142, as shown in Figure 19, to provide a cross section that was more resistant to being closed during the

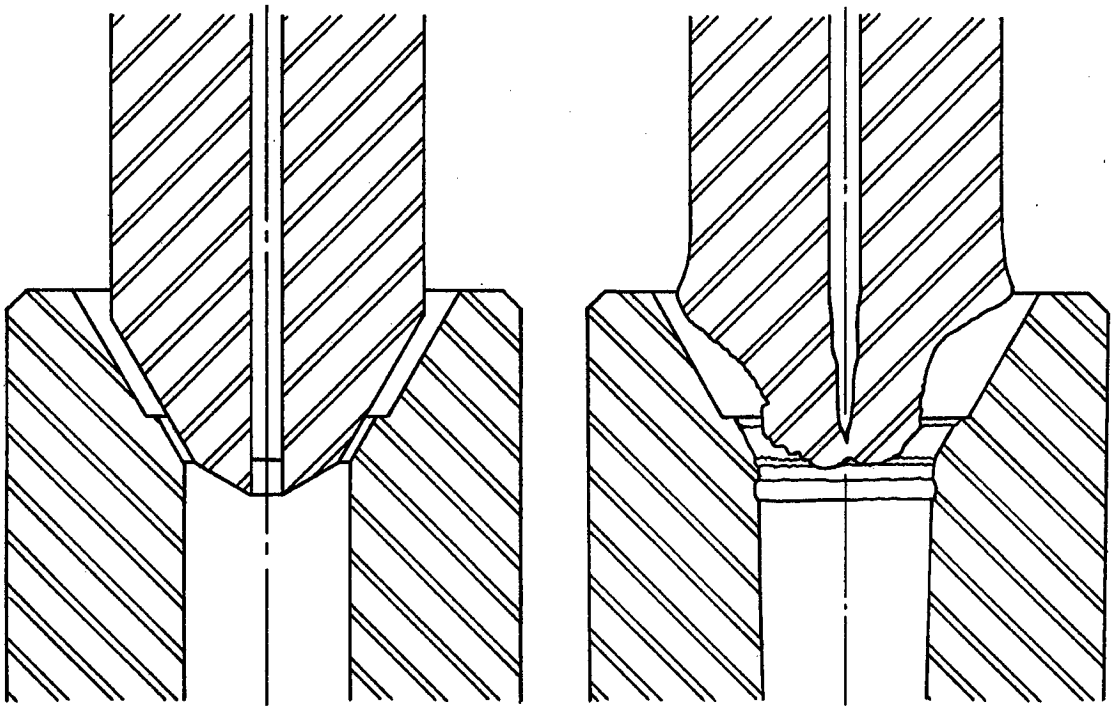

Figure 19. Relationship of the launch tube extension and injector section before and after Shot 8-3142.

extrusion of the cartridge. In addition, the shape of the gap between the injector and the extension was modified in an attempt to provide an opening that would ease the flow of the extruding aluminum cartridge yet maintain a pressure seal and not allow material to build up in the gap between these components. The nose of the injector was a cone with its apex pointing up range. The half angle of the front cone was 60 degrees out to a diameter of 27.4 mm. The half angle changed to 30 degrees at that point. This second conical surface extended to the full body diameter of the injector. The end of the extension had a mating 30-degree opening that was machined to provide a 1.25-mm-wide by 9.5-mm-long gap between the injector and the extension. The clearance between the injector and the extension increased to 3 mm beyond the end of the narrower gap.

Table 4 shows that the projectile velocity was not augmented in Shot 8-3142. Sectioning of the injector revealed that the bore was closed for the first 3 mm, was reduced to about 4 mm in diameter for the next 10 mm, and then gradually opened up to the full bore diameter of 5.54 mm at a distance of 30 mm from the nose. Late-time closure of the end of the injector was expected. The inside diameter of the rear end of the

cartridge was reduced to permit attachment of the titanium end cap and the impact of this portion of the cartridge would cause material at the end of the injector to flow inwardly as a result of the impact induced load. The interior surface of the conical opening in the extension exhibited small amounts of erosion and showed evidence of considerable "smearing" of the surface material. Tool marks left in this piece during its fabrication appeared to flow and produced what appeared to be ripple marks. The lack of velocity augmentation and the appearance of the interior surface of the extension tended to indicate that high-pressure gas generated during the extrusion of the cartridge may have escaped through the gap between the injector and the extension. The outside diameter of the extension increased by 1.3 mm, again as evidence of a significant buildup of pressure inside the extension. The open condition of the bore of the injector indicated that the more robust injector nose shape should be used in future test firings. The radiographs of the projectile showed that the projectile was transferred successfully for this test and was intact and undeformed.

The apparent loss of the high-pressure gas in Shot 8-3142 resulted in a change in the nose shape of the injector used for Shot 8-3143 and shown in Figure 20. The shape of the front part of the injector was identical to the one used for Shot 8-3142, out to a diameter of 34 mm. At this point, the conical surface terminated and the material from this point to the outside diameter of the injector was machined perpendicular to the bore of the injector. The end of the extension was machined to closely fit over the outside diameter of the injector, effectively making the injector/extension a closed chamber except for the open bore of the injector. The cavity in the extension was machined a little deeper to provide appropriate space for the collection of the extruded aluminum from the cartridge.

As shown in Table 4, minimal velocity augmentation occurred for Shot 8-3143. The bore of the injector was almost sealed for the first 5 mm, had a 2.5-mm-diameter opening for the next 10 mm, and was closed for the next 10 to 15 mm. The impact of the cartridge walls with the flat end of the injector produced a 10-mm-deep, ring-shaped crater in the injector. It appeared that radial forces generated during the later stages of the impact caused the closure of the bore of the injector. The outside diameter of injector and

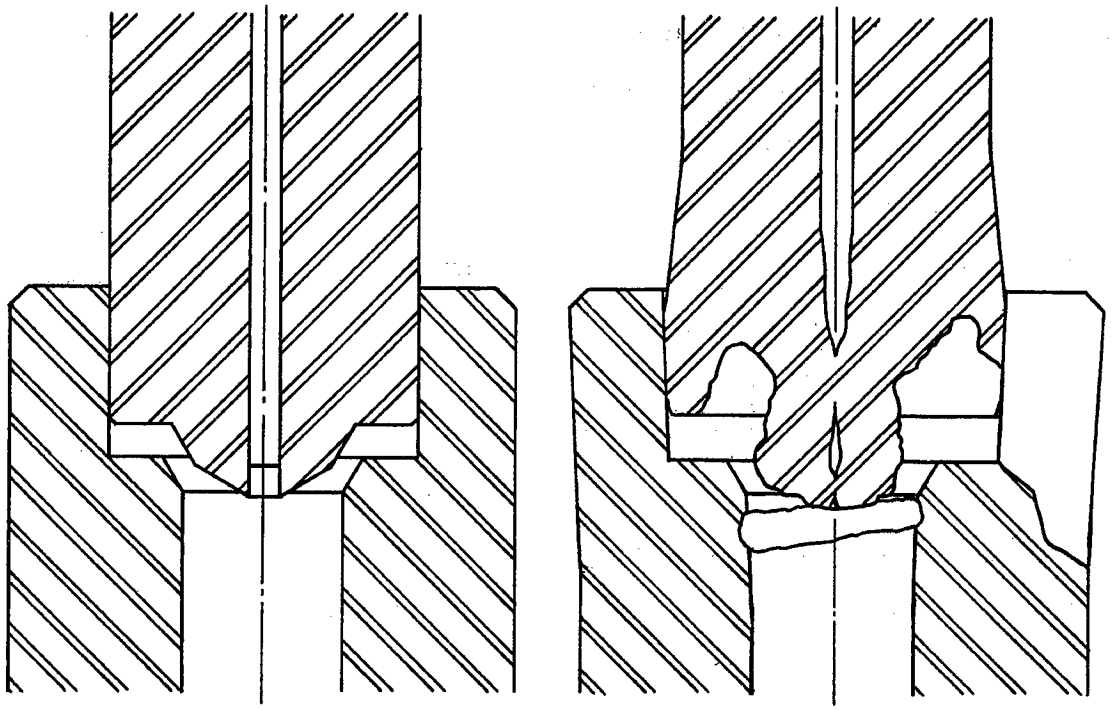

Figure 20. Relationship of the launch tube extension and injector section before and after Shot 8-3143.

the extension increased by 4.5 mm and a small section of the wall of the extension separated from the body of the extension. The radiographs show the projectile to be intact but with a small piece missing from the periphery of the rear end of the cylinder.

During the examination of the sectioned injectors from Shots 8-3140 through 8-3143, it was noted that the bore of the injector was collapsed to the point of sealing the bore. Choking or other processes that produce a restriction of the flow of hydrogen from the cartridge to the third-stage launch tube was a major concern for the success of the velocity augmentation launcher technique. Consequently, further work on this technique was directed toward obtaining an injector section whose bore did not collapse during compression of the hydrogen.

The front of the injector section for shots 8-3144, 8-3145, and 8-3147 consisted of two conical surfaces. The first surface, or nose, extended from the bore of the injector to a diameter of 25.4 mm. The angle of the nose section was varied for these test firings. The second conical surface extended from the 25.4 mm diameter to the full body diameter

of the injector. The half angle of this second surface was kept constant at 16 degrees. In the remainder of this report, the half angle used to describe the shape of a component is the angle the surface being described makes with the centerline or axis of the component. The end of the extension was machined with a 14-degree half angle opening to provide a 2.1-mm-wide gap between the injector and the extension at the entrance to the annular opening between these components. The clearance between the injector and the extension decreased as the distance from the entrance of the opening increased. Because of the difference in the half angles of the surfaces, the *area* of the opening remained nearly constant.

The nose of the injector for Shot 8-3144 was a cone with a half angle of 60 degrees with its apex pointing up range, as shown in Figure 21. Although this "reverse" cone is not conducive to enhancing the flow of hydrogen from the cartridge to the third-stage launch tube, it does promote the flow of the cartridge fragments away from the bore of the launch tube. The injection of cartridge fragments in the flow stream of the hydrogen results in reduced performance of the launcher and was to be avoided when possible.

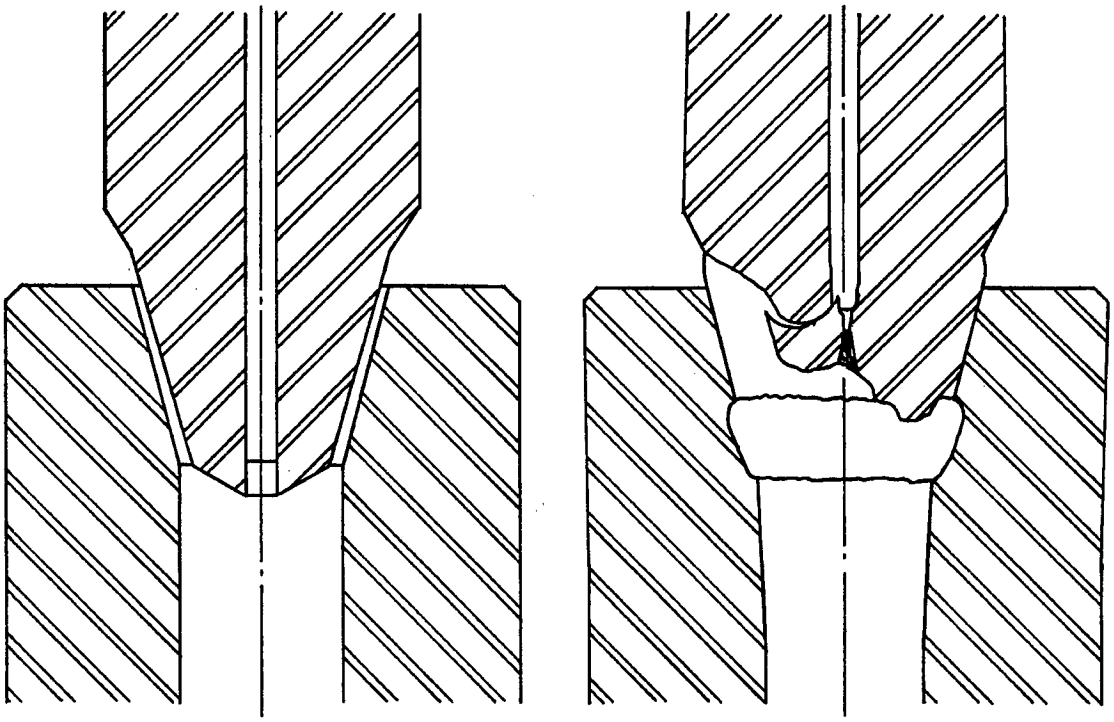

Figure 21. Relationship of the launch tube extension and injector section before and after Shot 8-3144.

Velocity augmentation was minimal for Shot 8-3144. Sectioning of the injector revealed that the bore of the injector had collapsed during this test firing. The witness plate for this test contained a small hole and one significant crater in addition to the hole made by the projectile. The radiographs of the projectile in flight showed that it was slightly damaged and that a portion of the small gallery that held the projectile was also travelling downrange. The small hole was probably made by the piece of the gallery. The "reverse" cone angle appeared to minimize the amount of cartridge debris that was injected into the third stage of the launcher.

The direction of the injector nose angle was reversed for Shot 8-3145 to provide a conical surface (45-degree half angle) that had its apex pointing down range as shown in Figure 22. Additionally, the injection velocity of the projectile (and cartridge) was reduced to 1.75 km/s to lower the impact forces and increase the chances of the injector bore remaining open. As shown in Table 4, the velocity of the projectile was increased 0.49 km/s during this test firing. The witness plate, however, showed considerably more

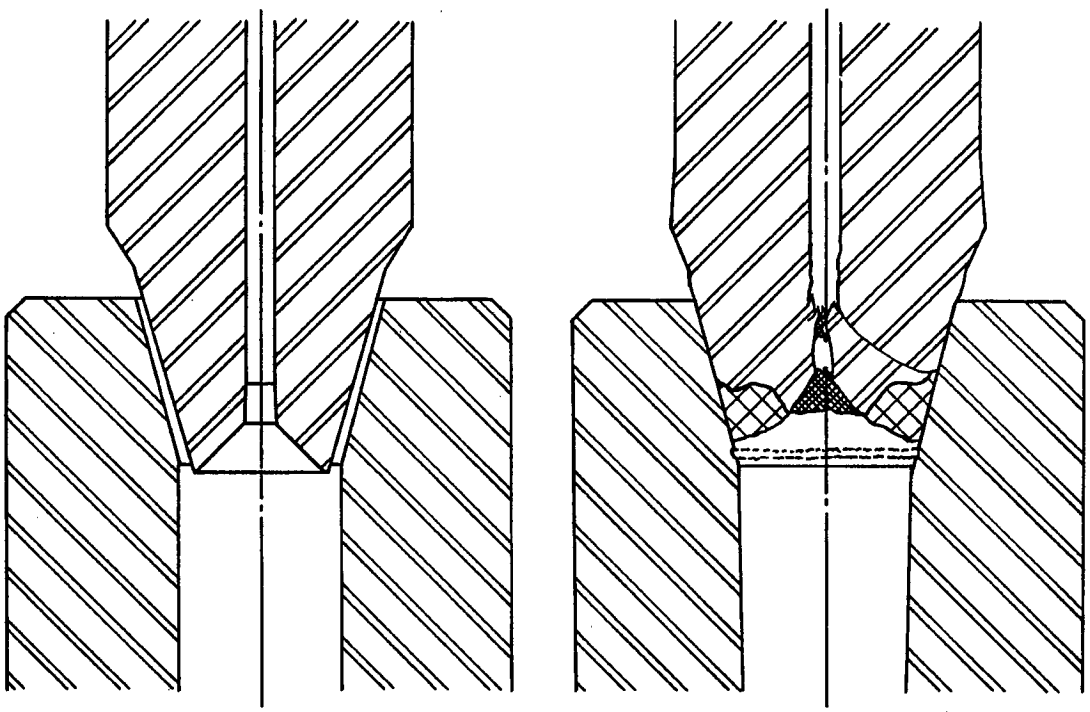

Figure 22. Relationship of the launch tube extension and injector section before and after Shot 8-3145.

damage, with numerous craters surrounding the hole made by the projectile. The craters were probably formed by the impact of small pieces of cartridge debris.

The sectioned injector from Shot 8-3145, presented in Figure 23, clearly revealed the probable sequence of events that took place in the bore of the injector during this and the previous test firings of the launcher. In Figure 23, the projectile entered the injector from the top of the page. The section shows a shear failure on the left side of the injector that extends from the intersection of the two conical surfaces to the bore of the injector. This shear failure was observed in the sections of the other injectors and, although not shown clearly in Figure 23, was on both side of the injector section. The half angle of this

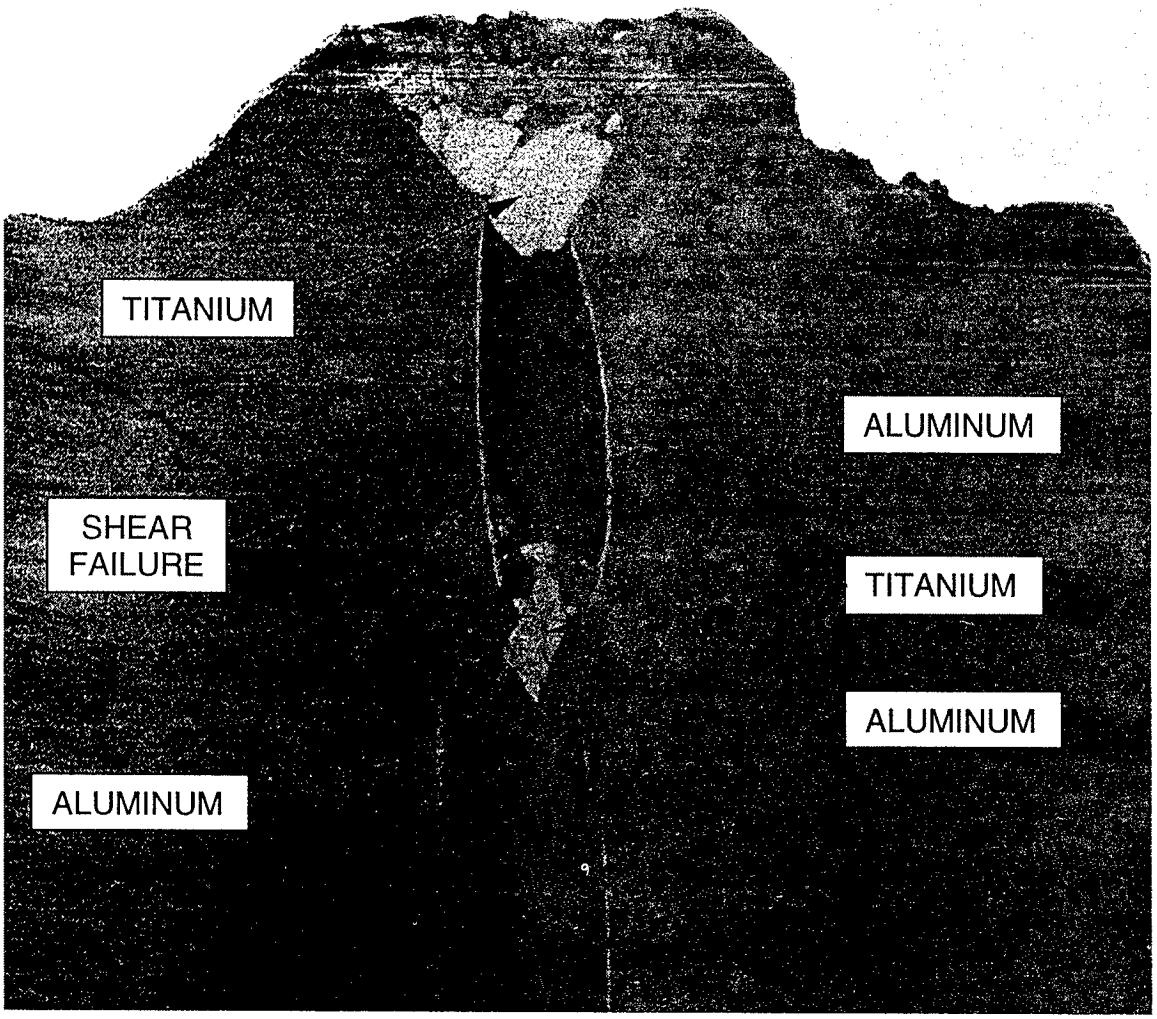

Figure 23. View of the interior of the injector section used for Shot 8-3145.

shear failure is at an angle of about 60 degrees, with the apex of the cone pointing to the muzzle of the launcher. The failure surface appears to extend most or all of the way around the injector and intersects its bore at a distance of about 2 cm from the entrance of the injector. After its formation, this conical section of failed material was driven into the conical seat left on the downrange side of the failure surface, effectively collapsing the bore of the failed section to a diameter of 1.5 mm from the original 5.54 mm. A small piece (~2 mm in diameter) of the titanium end cap used with the cartridge was trapped in the necked down region of the failed section.

Close examination of the injector section showed that a thick coating of aluminum was deposited on the bore of the injector for a distance of at least 5 cm from the original opening of the injector. This coating was deposited on the bore of the injector *before* the shear failure occurred. The coating extends to the intersection of the failed material and the bore of the injector on one side of the bore and is covered and trapped between these two materials on the other side of the section. If the coating were deposited after the failure, it would not be evident in either place. It is probable, therefore, that the aluminum was deposited immediately after the impact of the front of the cartridge. Next, the front section of the injector failed and the bore of the injector collapsed as the section was driven forward by impact forces and the increasing pressure of the hydrogen. Since the titanium end cap was the last portion of the cartridge to contact the injector, the small piece of titanium caught in the bore restriction in the failed section had to arrive after the collapse of this section. The results of this test clearly showed that significant mechanical choking of the bore of the injector had occurred during the flow of hydrogen from the cartridge to the bore of the launcher.

In the last test firing using a compressed gas cartridge, Shot 8-3147, the injector had the same shape as for Shot 8-3145, except that a 3-mm-thick layer of Nylon was inlaid in the 45-degree cone at the front of the injector as shown in Figure 24. The Nylon insert was installed for two reasons. In the six test firings just described, the hypervelocity impact of the cartridge with the injector produced a strong shock in the injector and in the

hydrogen. The initial direction of flow of the hydrogen behind this strong shock could be opposite the direction of motion of the cartridge and projectile. The

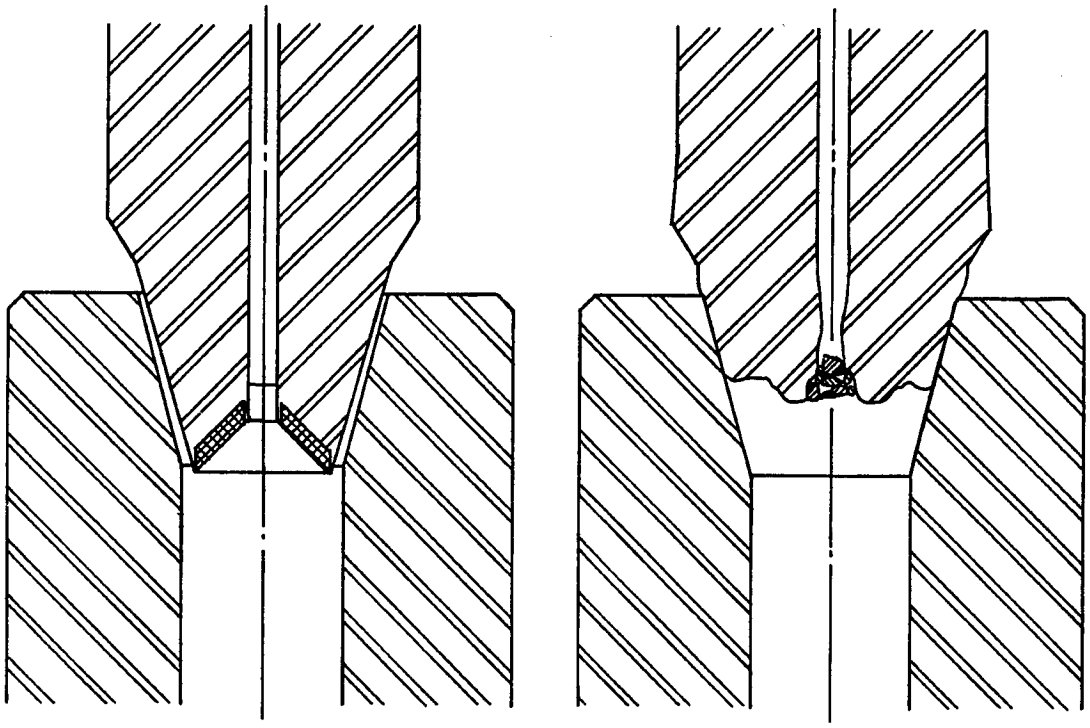

Figure 24. Relationship of the launch tube extension and injector section before and after Shot 8-3147.

reflection of the strong shock in the hydrogen from the titanium end cap would reverse the direction of flow of the gas, but the initial reversal of flow occurs at a time when the flow of hydrogen into the launcher should be the highest. Impact of the aluminum cartridge with the Nylon insert would reduce the magnitude of the impact loads at the front of the injector and could reduce the likelihood of a shear failure of the injector. In addition, the significantly weaker shock formed in the hydrogen after the impact of the aluminum cartridge with the Nylon insert should promote the initial flow of hydrogen from the cartridge to the third stage of the launcher. Table 4 shows that the projectile velocity augmentation was reduced from that obtained for Shot 8-3145. The cross section of the injector revealed that the bore of the injector did remain open. However, a slight restriction occurred about 1.8 cm from the original opening of the injector. The witness plate for this test was severely damaged by the impact of debris, presumably from the Nylon insert. Use of the Nylon insert severely contaminated the flow of the hydrogen into

the third stage of the launcher, further limiting any chance for the technique to produce the desired results.

Shot 8-3147 was the last test firing using a cartridge in an attempt to augment the velocity of a projectile and achieve an impact velocity of 10 km/s. Shot 8-3145 clearly demonstrated that mechanical choking of the flow of hydrogen into the third stage of the launcher occurred during the firing cycle. In addition, the transient conditions that develop during the flow of hydrogen from the cartridge to the launcher may, of themselves, result in choking of the flow of gas. Finally, further work on the technique would require an injector made of a material that could resist deformation resulting from impact loads generated during the impact of the cartridge with the injector.

SECTION V. McGILL UNIVERSITY THREE-STAGE LAUNCHER TECHNIQUE

The Space Research Institute at McGill University performed several series of bumper shield studies [1] under contract to NASA Lewis during the period from 1964 to 1966. They developed and used a three-stage, light-gas gun to launch 12.7-mm-diameter Lexan disks to impact velocities of 10.5 km/s. However, their work is relatively unknown, and little was published that described their gun and its operation. To date, the only documentation found for this launcher is a brief description consisting of 3-1/2 pages of double-spaced text, two photographs, and three figures that was published in the final report describing the results of their work.

The design of the components used for the three-stage launcher described in Section IV can be readily adapted for use as a "conventional" three-stage, light-gas gun as shown in Figure 25. The configuration of the second-stage launch tube extension and the injector were adapted for use as the "high-pressure section" of a three-stage, light-gas gun.

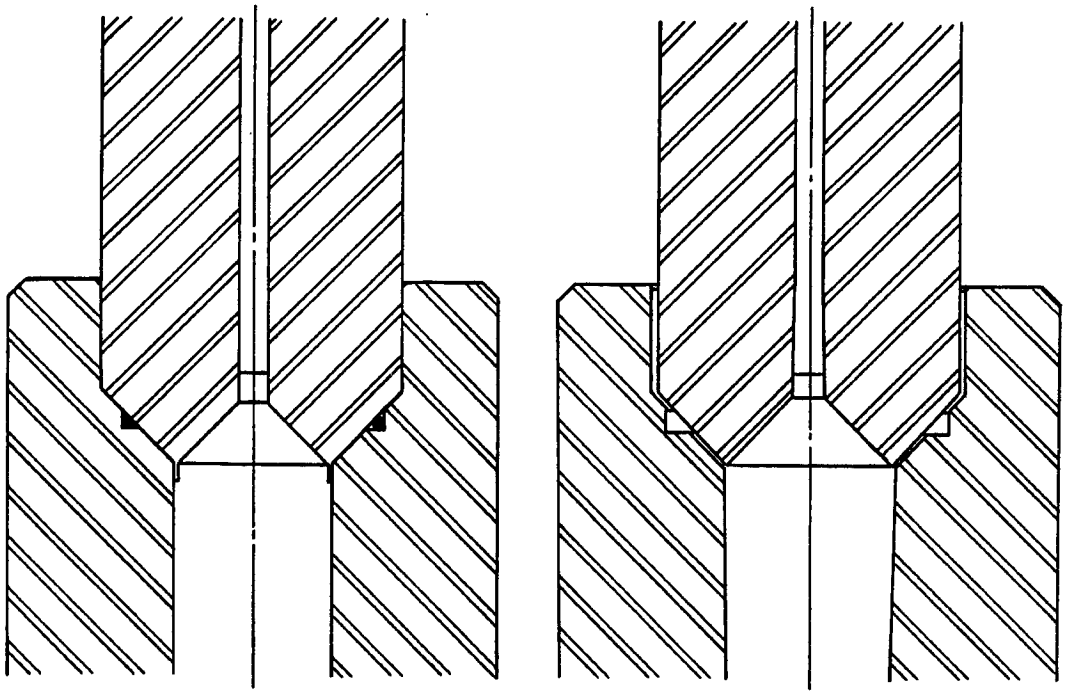

Figure 25. Illustration of the adaptation of the launch tube extension and injector section for use with the McGill University style launcher. The relationship of these two components is shown before and after Shot 8-3146.

The modified extension and injector were used for Shot 8-3146. In this test firing, a 5.54-mm-diameter, 5.54-mm-long Nylon cylinder with a nominal mass of 0.153 g was used as the projectile. A high-density polyethylene piston with a mass of 63 g was used to compress a charge of hydrogen installed in the second-stage launch tube. A projectile velocity of 7.21 km/s was achieved even though the joint between the extension and the injector leaked badly during the firing.

The fact that the McGill University launcher was capable of accelerating a projectile of known shape and mass to 10.5 km/s is proof that a three-stage, light-gas gun is capable of achieving velocities of interest. In this section, a brief description of the hardware used in the fabrication of the third stage of the modified three-stage launcher is given. Next, the results of Shot 8-3146 and the five test firings that were performed to evaluate the performance of the McGill University style three-stage, light-gas gun are presented.

A. Description of Hardware

The three-stage launcher system shown in Figure 10 was modified for use as a three-stage, light-gas gun using the same principles employed in the McGill University three-stage, light-gas gun. The modified three-stage launcher assembly is shown in Figure 26. In the modified design, old parts numbered 4, 6, 7, 8, 9, and 10 in Figure 10 were replaced with new parts numbered 4, 6, 7, 8, and 9 in Figure 26. Part number 5 was modified for use with the new design and part number 10 was not used in the new design. The new design also used fewer fasteners and was simpler to assemble. In the new design, a one-piece high-pressure section was used in place of the modified extension and injector that were used for Shot 8-3146. The high-pressure section had a small cavity that was used for the installation of a metal burst disk.

The instrumentation used during the test firings described in Section IV was also used during the test firings of the three-stage, light-gas gun. In addition to this instrumentation, three pressure transducers were installed 65.0, 34.5, and 9.1 cm from the muzzle of the third stage launch tube. Loading of the three-stage, light gas gun began with the installation and alignment of the aluminum sheet used as the target and witness

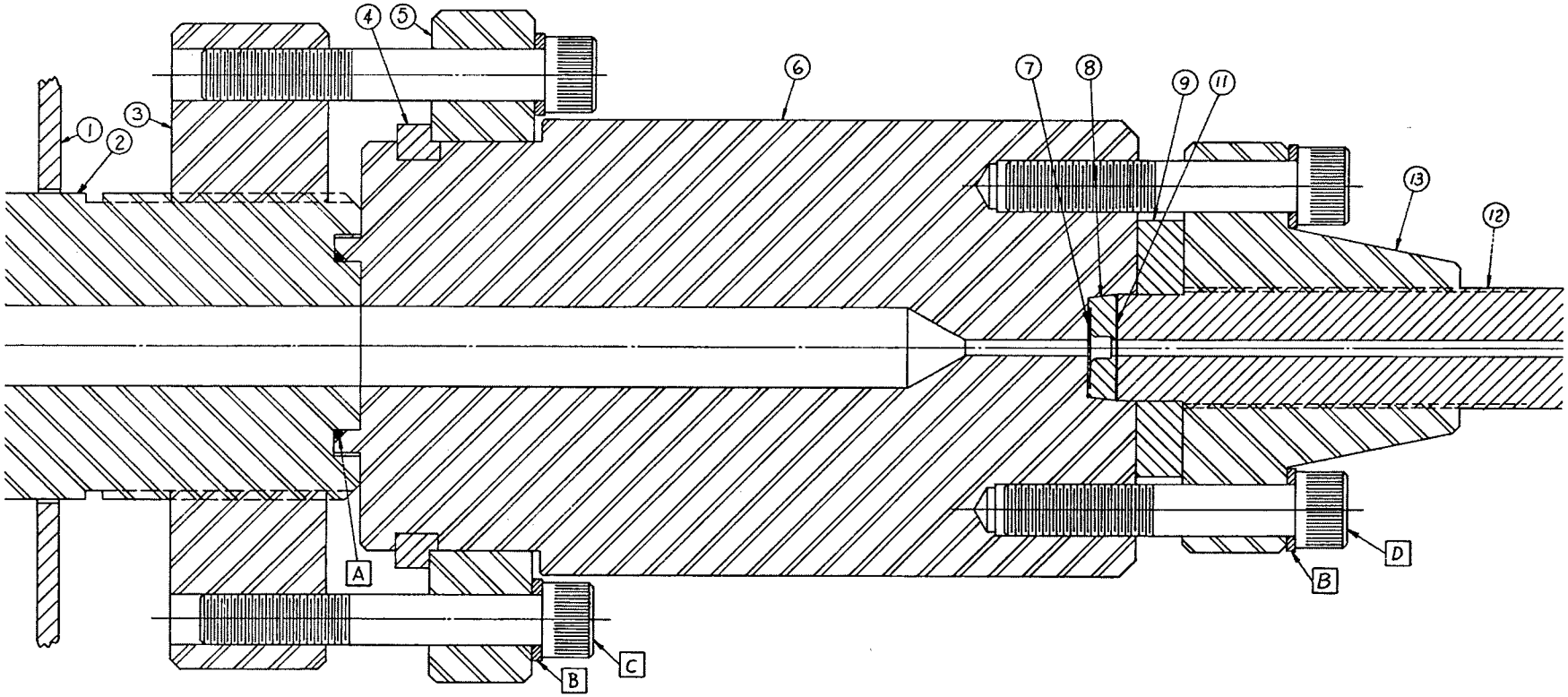

SPECIALTY PARTS

1. Front Wall of Blast Tank
2. 30 mm Launch Tube
3. 30 mm Launch Tube Collar
4. Split Transfer Ring
5. Third Stage Front Collar
6. High-Pressure Section
7. Burst Disk
8. Burst Disk Insert
9. Load Transfer Ring
10. Not Used
11. Seal
12. 5.6 mm Launch Tube
13. 5.6 mm Launch Tube Collar

PURCHASED PARTS

A. "O"-Ring
B. Flat Washer
C. Socket Head Cap Screw
D. Socket Head Cap Screw

Figure 26. Illustration of the McGill University style three-stage launcher assembly. Details of the metal-to-metal seals used between the 30-mm launch tube and the high-pressure section and between the high-pressure section and the 6.5-mm launch tube are not shown.

plate in the tests. The location of the shot line axis was marked on the target using a bore scope that viewed the target through the bores of the launcher. After the test firing, the location of the impact was determined with respect to the nominal location of the previously marked aim point. The projectile was installed in the breech end of the third-stage launch tube, a burst disk was installed in the burst disk insert, the high-pressure section was lifted into place, the third-stage of the launcher was assembled, and the bolts tightened. Assembly of the rest of the two-stage, light-gas gun proceeded in the normal fashion. After the assembly was complete, the second-stage launch tube was evacuated and hydrogen was introduced into the launch tube. Access to the interior of the second-stage launch tube was gained through the port that was installed near the muzzle of the 30-mm launch tube for use in venting hydrogen that may have been trapped in the launch tube after a test firing of the three-stage launcher.

B. Results of Test Firings

The results of six test firings of the three-stage, light-gas gun are presented in Table 5. This table includes the results of Shot 8-3146. This test firing was made using the "two piece" high-pressure section that was an adaptation of the launch tube extension and injector used in the test series described in Section IV. This adapted design did not use a burst disk. Instead the projectile was press fit into the third-stage launch tube in order to form a seal during evacuation and pressurization of the second-stage of the launcher and to resist premature movement of the projectile due to the forces applied to it by the hydrogen charge in the second stage. The third-stage "burst disk" pressure shown for Shot 8-3146 in Table 5 was determined by measuring the break away force required to initiate movement of a Nylon cylinder in a simulated section of the third-stage launch tube. The projectile used for Shot 8-3146 was the same size and diameter as the Nylon cylinders used in the force measurements. The measured projectile velocity for Shot 8-3146 was 7.21 km/s, even though the joint between the extension and the injector leaked badly during the firing.

Shot 8-3148 was duplicate of Shot 8-3146 with the following exceptions: (1) a one-piece high-pressure section was used and (2) a metal burst disk was used to control the

TABLE 5

RESULTS OF TEST FIRINGS OF THREE-STAGE LAUNCHER (McGILL UNIVERSITY TECHNIQUE)

Piston velocities shown in italics are best estimates of the velocity. The projectile mass shown in italics is an estimated value based on identical projectiles used in earlier test firings. The downward pointing arrow shown with two second stage hydrogen pressures indicates there was a very slight leak in the system and that the pressure at the time the gun was fired could have been slightly lower. The third-stage burst disk pressure shown in quotation marks is a computation of the pressure that would be required to overcome the press fit of the projectile in the gun.

	Shot Number					
Feature	***8-3146***	***8-3148***	***8-3149***	***8-3150***	***8-3151***	***8-3152***
Second Stage Piston Mass, *g*	62.9327	62.4306	63.5255	41.4428	41.6784	40.9789
Third Stage Projectile Mass, *g*	*0.153*	0.1545	0.1061	0.1079	0.1061	0.1155
First Stage Hydrogen Pressure, *MPa* (*psia*)	3.96 (575)	3.96 (575)	3.96 (575)	3.10 (450)	3.10 (450)	3.10 (450)
Second Stage Hydrogen Pressure, *MPa* (*psia*)	0.69↓ (100↓)	0.69 (100)	0.69 (100)	0.69↓ (100↓)	0.52 (75)	0.69 (100)
Third Stage Burst Disk Pressure, *MPa* (*psia*)	"12.06" ("1,750")	26.19 (3,800)	28.26 (4,100)	24.13 (3,500)	41.4 (6,000)	128.21 (18,600)
Pressure (LT6A) behind Piston, *MPa* (*psi*)	16.09 (2,334)	16.52 (2,397)	15.74 (2,283)	10.59 (1,536)	10.73 (1,556)	11.30 (1,639)
Pressure (LT7) behind Piston, *MPa* (*psi*)	14.45 (2,097)	16.21 (2,352)	16.54 (2,400)	10.70 (1,552)	10.95 (1,588)	12.03 (1,745)
Measured Piston Velocity, *m/s* (*fps*)	*2,419* (*7,936*)	*2,193* (*7,194*)	1,772 (5,814)	1,881 (6,173)	1,793 (5,882)	1,847 (6,060)
Velocity of Shock in Hydrogen, *m/s* (*fps*)	1,762 (5,780)	1,638 (5,376)	1,847 (6,060)	2,059 (6,757)	2,059 (6,757)	2,005 (6,579)
Projectile at Laser-PD Station 1, *μs*	0	-1	0	-1	2	0
Duration of Leak at Laser-PD Station 1, *μs*	1	16	7	17	25	6
Third Stage Projectile Velocity, *km/s*	7.21	7.15	8.31	8.45	7.15	8.65

release of the hydrogen. The measured velocity for Shot 8-3148 was 7.15 km/s, not appreciably different than the velocity of 7.21 km/s obtained for Shot 8-3146. Evidently the large leak in the two-piece high-pressure section had little effect on the projectile velocity for Shot 8-3146.

The loading conditions (i.e., projectile mass, second-stage piston mass and velocity, hydrogen charge pressure, etc.) were kept the same for Shots 8-3146 and 8-3148. The projectile mass was reduced for Shot 8-3149 from 0.15 g to 0.11 g. The measured velocity for Shot 8-3149 was 8.31 km/s, a result that was not surprising given the reduction in the mass of the projectile.

During the posttest examination of the high-pressure section after Shots 8-3148 and 8-3149, some permanent deformation of the outside diameter of the forward part of the high-pressure section was recorded. An even greater enlargement of the bore of the throat area of the high-pressure section was measured. The result of these measurements, taken with the fact that Shot 8-3146 achieved a high velocity in spite of a large leak, indicated that more energy was available than could be effectively used to accelerate the projectile. The excess energy was going into permanently deforming range components.

The mass of the second-stage piston was reduced by 35 percent and the first-stage hydrogen charge pressure was reduced by 22 percent for the last three test firings of the three-stage, light-gas gun. These changes did not significantly affect the velocity of the second-stage piston that was measured using the 30-mm launch tube pressure transducers, LT6A and LT7, for Shots 8-3150, 8-3151, and 8-3152. The peak base pressure driving the second-stage piston was reduced significantly, however, for these three test firings and the extent and amount of permanent deformation of the high-pressure section decreased dramatically. The second-stage hydrogen pressure and the third-stage burst disk release pressure were varied for the last three test firings of the three-stage, light-gas gun.

The second stage hydrogen charge pressure and third-stage burst disk release pressure used for Shot 8-3150 were the same as were used for Shot 8-3149, or 0.69 MPa (100 psi) and 24.13 MPa (3,500 psi), respectively. The projectile velocity obtained for Shot 8-3150 was 8.45 km/s, or 0.14 km/s higher than the projectile velocity obtained for

Shot 8-3149. Clearly, the use of the lighter first-stage piston and reduced hydrogen pressure did not affect the performance of the launcher. They did, however, reduce the abuse of the high-pressure section. The second stage hydrogen charge pressure was reduced to 0.52 MPa (75 psi) for Shot 8-3151. The third-stage burst disk release pressure used for Shot 8-3151 was 41.4 MPa (6,000 psi) or slightly above the release pressure used for Shot 8-3150. The projectile velocity for Shot 8-3151 was 7.15 km/s, well below the velocity of 8.45 km/s obtained for Shot 8-3150.

An examination of the recorded data taken from the laser-photodetector systems for the earlier test firings, and used to determine the projectile velocity was performed after Shot 8-3151. This examination indicated that the reduction in projectile velocity that was observed for Shot 8-3151 may have been the result of a leakage of the high-pressure hydrogen around the projectile and not a result of the change in loading conditions for this test. The output signal of the laser-photodetector system that was installed ~1.5 cm downrange of the muzzle of the third stage launch tube (at Station 1, the first system to be interrupted by the projectile) did not display the "clean" drop in the output voltage that was characteristic of the signals obtained from the last three laser-photodetector systems that were encountered as the projectile moved downrange. The slow drop in voltage indicated that the laser beam interruption occurred over a period of time. The nature of the slowly decreasing voltage signal indicated that the path of the laser beam might have actually been deflected away from the photodetector, probably by hydrogen that had leaked around the projectile and was escaping down the launch tube ahead of the projectile.

Because the laser-photodetector beam interruption were sharp and clear for the three downrange laser-photodetector systems, the velocities of the projectile for the six test firings shown in Table 5 were known within the measurement error of the system. The measured velocities were used to determine the time when the projectiles should be in a position to interrupt the laser beam at Station 1. This time is shown, in the recording system time scale, for all six of the test firings. As shown in Table 5 this time was zero for three of the tests, a negative 1 μs for two of the tests and a positive 2 μs for one test. The difference in the time the signal for Station 1 began to drop and the computed time for the

arrival of the projectile at Station 1 was determined to be the duration of the leak of the hydrogen gas around the projectile. The velocities of the projectiles for Shots 8-3150, 8-3151, and 8-3152, are shown in Table 5, to decrease as the duration of the leak increases. It is likely, therefore, that the decreases in velocity shown for these test firings is more a result of the leak of the driving gas and the slight increase in the "mass" of the projectile, due to the accumulation of this gas in front of the projectile.

The load transfer ring and the third stage launch tube collar (Parts 9 and 13 in Figure 26) were difficult to move after Shot 8-3150 and could not be moved after Shot 8-3151. Consequently, the bore of the third stage launch tube was carefully inspected after Shot 8-3151 in an attempt to determine the cause of the hydrogen leak while the projectile was being accelerated. The inspection revealed that permanent swelling and/or erosion of the bore had occurred and that the bore was oversize at the breech and gradually returned to its original diameter after a distance 50 cm. Obviously, the projectiles were undersize during the first part of their travel down the launch tube and a leak of propelling gas was almost a certainty.

The projectile used for Shot 8-3152 was machined oversize to be a press fit in the breech end of the tapered bore of the launch tube. A groove was machined around the periphery of the projectile to form a small land at either end of the projectile. The lands compressed to accommodate the decrease in bore size during the launch of the projectile. In addition, the third-stage burst disk pressure was increased to 128.21 MPa (18,600 psi) for this test firing. The duration of the leak was decreased significantly and a projectile velocity of 8.65 km/s was obtained. The increase in the performance of the launcher for this test firing was believed to be due to the reduction in the size of the leak and not the increase in the burst disk pressure. The firing of Shot 8-3152 concluded work with the three-stage launcher. If the results of these six tests were plotted on Figure 1, they would lie above the curves shown in the figure. However, as was noted in the description of their results, these test firings produced considerable deformation of the gun components. Analysis of the test results and quantitative data obtained during the test firings strongly suggest a route to be followed during future test firings of this launcher.

The three pressure transducers installed in the third-stage launch tube produced pressure-time histories whose structures were qualitatively different than those produced by the pressure transducers mounted in the second-stage launch tube. In the second-stage launch tube, the pressure increased suddenly to the base driving pressure after the pressure transducer port was uncovered by the passage of the projectile. The pressure behind the projectile in the third-stage launcher rose slowly. The considerable difference in the structure of these pressure-time histories may indicate that the pressure transducers in the third-stage launch tube sensed the static pressure of a significantly thick boundary layer that developed along the wall of the launch tube because of the formation of a system of oblique shocks in the hydrogen.

The pressure-time histories obtained from pressure transducers LT6A and LT7 clearly show the development of a strong shock in the hydrogen in the second-stage launch tube. The velocity of the shock is presented in Table 5 for each of the test firings. The possible formation of very weak shocks is occasionally observed in the pressure transducers that were installed in the high-pressure section end of the first-stage or pump tube of the two-stage gun. Strong shocks are not generated in the first-stage hydrogen because the velocity of the powder-driven piston is relatively low [15]. The formation of the strong shocks in the second-stage hydrogen is facilitated by the higher velocity of the second stage-piston. In the test firings presented in Table 5, the velocity of the second stage piston was held constant while the second-stage piston mass, projectile mass, second-stage hydrogen charge pressure, and the third-stage burst disk pressure were varied systematically to determine the set of conditions that produced the highest projectile velocity with the least deformation or damage to the gun components. Increasing the velocity of the second stage piston would increase the velocity of the shock in the second-stage hydrogen. The brief description given in the McGill report [1] implies that the projectile is suddenly accelerated by the reflection of a very strong shock from the rear of the projectile. Multiple shock reflections in the hydrogen subsequently greatly increase the pressure behind the projectile and continue to accelerate it. The use of the burst disk in the test firings described in this report may have impaired the operation of the launcher.

The next series of test firings should employ the following changes to the three-stage launcher. First, the bore of the third-stage launch tube should be increased. UDRI has an 8-mm-bore-diameter by 1.93-m long launch tube that could be used with the revised launcher. Since boundary layer thickness is a function of the shock strength and gas velocity, then the use of a larger bore third-stage launch tube would reduce the effects of the boundary layer on the restriction of the flow of hydrogen into the third-stage launch tube. Second, the use of the larger bore launch tube will require the fabrication of a new high-pressure section. The new high-pressure section would be designed for use without the burst disk insert. Finally, a lighter second-stage piston would be fired at higher velocities than was used in the previous firings. Pressure transducers installed in the second-stage launch tube would continue to provide relevant information regarding the passage of the incident and reflected shocks in the second-stage launch tube and the measured performance of the launcher would guide further variation of loading parameters. The fact that the McGill University launcher was capable of accelerating projectiles to a velocity of 10.5 km/s is proof that the launcher is capable of accelerating projectiles to meaningful velocities when the appropriate set of loading conditions are determined.

SECTION VI. SUMMARY AND RECOMMENDATIONS

This report describes and presents the results of work that was done in an attempt to develop an augmented acceleration technique that would launch small projectiles of known shape, mass, and state to velocities of 10 km/s and higher. The higher velocities were to be achieved by adding a third stage to a conventional two-stage, light-gas gun and using a modified firing cycle for the third stage. Small cartridges (30-mm diameter by 93-mm long) capable of containing hydrogen gas at a pressure of 41 MPa (6,000 psi) were designed and successfully launched to a velocity of 2.70 km/s. Test firings of the launcher also demonstrated that small Nylon projectiles carried in a delicate gallery at the front of the cartridge could be dynamically inserted into the third stage of the launcher. Ultimately, however, the technique did not achieve the desired results and was modified for use during the development program. The maximum velocity augmentation increased the velocity of a 0.153-g Nylon cylindrical projectile from 1.75 km/s to 2.24 km/s, or an increase of 0.49 km/s. The design of the components used for the augmented-acceleration, three-stage launcher were easily adapted for use as a three-stage launcher that used a single-stage acceleration cycle and the remainder of the contract period was spent performing test firings using the modified three-stage launcher.

Work with the modified three-stage launcher, although not complete, did produce test firings in which an 0.11-g, cylindrical Nylon projectile was launched to a velocity of 8.65 km/s. This modified launcher cycle was identical, in principle, to the launcher and firing cycle used for the three-stage gun developed by the Space Research Institute at McGill University and used from 1964 to 1966. A brief description, consisting of 3-1/2 pages of double-spaced text, two photographs, and three figures was included in the final report describing shield studies at McGill University and appears to be the only published documentation of this launcher.

The analysis of the data obtained from the launcher test firings indicates that the performance of the launcher would be improved by increasing the velocity of the second stage piston to produce a very strong shock in the second-stage hydrogen. On the basis of this analysis, recommendations for additional work with the three-stage launcher were

presented in Section V. They included: (1) increasing the bore diameter and the length of the third stage of the launcher to 8 mm and 1.93 mm long; (2) using a new high-pressure section that was not fitted for use with a burst disk; and (3) using a lighter piston fired at a higher velocity. Performance of the newer launcher would continue to be monitored using the instrumentation used in the earlier test firings.

REFERENCES

1. Friend, W.H., C.L. Murphy, and I. Shanfield, "Review of Meteoroid-Bumper Interaction Studies at McGill University," NASA-CR-54857, August 1966.

2. Chhabildas, L.C., L.M. Barker, J.R. Asay, T.G. Trucano,. G.I. Kerley, and J.E. Dunn, "Launch Capabilities to Over 10 km/s," **Shock Compression of Condensed Matter-1991**, (Schmidt *et al.*, Eds.), Elsevier Science Publishers, pp. 1025-1031, 1992.

3. Chhabildas, L.C., L.M. Kmetyk, W.D. Reinhart, and C.A. Hall, "Enhanced Hypervelocity Launcher - Capabilities to 16 km/s," *International Journal of Impact Engineering* **17**, pp. 183-194, 1995.

4. Walker, J.D., D.J. Grosch, and S.A. Mullin, "A Hypervelocity Fragment Launcher Based on an Inhibited Shaped Charge," *International Journal of Impact Engineering* **14**, pp. 763-774, 1993

5. Geille, A., "Status of Development of Space-Debris Hypervelocity Explosive Multi-Stage Launcher," *International Journal of Impact Engineering* **20**, pp. 271-279, 1997.

6. Osher, J.E., H.H. Chau, G.R. Gathers, R.S. Lee, and R.C. Wingate, "Application of a 100-kV Electric Gun for Hypervelocity Impact Studies," *International Journal of Impact Engineering* **5**, pp. 501-507, 1987.

7. Iglseder, H., and E. Igenbergs, "Crater Morphology at Impact Velocities Between 8 and 17 km/s," *International Journal of Impact Engineering* **10**, pp. 271-280, 1990.

8. Keaton, P.W., G.C. Idzorek, L.J. Rowton, J.D. Seagrave, G.L. Stradling, S.D. Bergeson, M.T. Collopy, H.L. Curling, Jr., D.B. McColl, and J.D. Smith, " A Hypervelocity-Microparticle-Impacts Laboratory with 100 km/s Projectiles," *International Journal of Impact Engineering* **10**, pp. 295-308, 1990.

9. Kottenstette, J.P., and W.G. Howell, "Traveling Reservoir Light-Gas Gun and Analysis of a Third Stage Accelerator for a Light Gas Gun," **Proceedings of Seventh Hypervelocity Impact Symposium**, pp. 45-60, February 1965.

10. Asay, J.R., T.G. Trucano, and R.S. Hawke, "The Use of Hypervelocity Launchers to Explore Previously Inaccessible States of Matter," *International Journal of Impact Engineering* **10**, pp. 51-66, 1990.

11. Drobyshevski, E.M., B.G. Zhukov, V.A. Sakharov, A.M. Studenkov, and R.O. Kurakin, "Head-on Collision Opens 15-20 km/s Opportunities," *International Journal of Impact Engineering* **17**, pp. 285-290, 1995.

REFERENCES
(Concluded)

12. Young Jr., R.P., J.R. Blanks, and M.E. Smith, "Demonstration of the Counter-Fire Test Technique for Impact Velocities Between 7 and 14 km/s," AEDC-TR-95-13, December 1995.

13. ASME Unfired Pressure Vessel Code, Section VIII, 1959 Edition.

14. Walters, R.J. and W.T. Chandler, "Effects of High-Pressure Hydrogen on Metals at Ambient Temperature," R-7780-1, Final Report, Contract NAS8-19, Rocketdyne Research Division, Canoga Park, CA, February 1969.

15. Charters, A.C., "Development of the High-Velocity Gas-Dynamics Gun," *International Journal of Impact Engineering* **5**, pp. 181-203, 1987.

REPORT DOCUMENTATION PAGE

Form Approved
OMB No. 0704-0188

Public reporting burden for this collection of information is estimated to average 1 hour per response, including the time for reviewing instructions, searching existing data sources, gathering and maintaining the data needed, and completing and reviewing the collection of information. Send comments regarding this burden estimate or any other aspect of this collection of information, including suggestions for reducing this burden, to Washington Headquarters Services, Directorate for Information Operation and Reports, 1215 Jefferson Davis Highway, Suite 1204, Arlington, VA 22202-4302, and to the Office of Management and Budget, Paperwork Reduction Project (0704-0188), Washington, DC 20503

1. AGENCY USE ONLY *(Leave Blank)*

2. REPORT DATE
May 2001

3. REPORT TYPE AND DATES COVERED
Contractor Report (Final)

4. TITLE AND SUBTITLE
A New Technique for Achieving Impact Velocities Greater Than 10 km/sec

5. FUNDING NUMBERS
NAS8–98216

6. AUTHORS
A.J. Piekutowski

7. PERFORMING ORGANIZATION NAMES(S) AND ADDRESS(ES)
University of Dayton Research Institute
300 College Park Avenue
Dayton, OH 45469–0182

8. PERFORMING ORGANIZATION REPORT NUMBER
M–1016

9. SPONSORING/MONITORING AGENCY NAME(S) AND ADDRESS(ES)
George C. Marshall Space Flight Center
Marshall Space Flight Center, AL 35812

10. SPONSORING/MONITORING AGENCY REPORT NUMBER
NASA/CR—2001–210990

11. SUPPLEMENTARY NOTES
Prepared for NASA's Space Environments and Effects (SEE) Program
Technical Monitor: Angie Nolen

12a. DISTRIBUTION/AVAILABILITY STATEMENT
Unclassified-Unlimited
Subject Category 88
Standard Distribution

12b. DISTRIBUTION CODE

13. ABSTRACT *(Maximum 200 words)*

This Contractor Report describes and presents the results of work that was done in an attempt to develop an augmented acceleration technique that would launch small projectiles of known shape, mass, and state to velocities of 10 km/sec and higher. The higher velocities were to be achieved by adding a third stage to a conventional two-stage, light-gas gun and using a modified firing cycle for the third stage. The technique did not achieve the desired results and was modified for use during the development program. Since the design of the components used for the augmented-acceleration, three-stage launcher could be readily adapted for use as a three-stage launcher that used a single-stage acceleration cycle; the remainder of the contract period was spent performing test firings using the modified three-stage launcher. Work with the modified three-stage launcher, although not complete, did produce test firings in which an 0.11-g cylindrical nylon projectile was launched to a velocity of 8.65 km/sec.

14. SUBJECT TERMS
hypervelocity launchers; two-stage, light-gas guns; three-stage, light-gas guns; high-pressure hydrogen; augmented acceleration

15. NUMBER OF PAGES
78

16. PRICE CODE

17. SECURITY CLASSIFICATION OF REPORT
Unclassified

18. SECURITY CLASSIFICATION OF THIS PAGE
Unclassified

19. SECURITY CLASSIFICATION OF ABSTRACT
Unclassified

20. LIMITATION OF ABSTRACT
Unlimited

National Aeronautics and
Space Administration
AD33
George C. Marshall Space Flight Center
Marshall Space Flight Center, Alabama
35812