NASA/TM—2001–211301

Equations of Motion for the g-LIMIT Microgravity Vibration Isolation System

Y.K. Kim and M.S. Whorton
Marshall Space Flight Center, Marshall Space Flight Center, Alabama

October 2001

The NASA STI Program Office…in Profile

Since its founding, NASA has been dedicated to the advancement of aeronautics and space science. The NASA Scientific and Technical Information (STI) Program Office plays a key part in helping NASA maintain this important role.

The NASA STI Program Office is operated by Langley Research Center, the lead center for NASA's scientific and technical information. The NASA STI Program Office provides access to the NASA STI Database, the largest collection of aeronautical and space science STI in the world. The Program Office is also NASA's institutional mechanism for disseminating the results of its research and development activities. These results are published by NASA in the NASA STI Report Series, which includes the following report types:

- TECHNICAL PUBLICATION. Reports of completed research or a major significant phase of research that present the results of NASA programs and include extensive data or theoretical analysis. Includes compilations of significant scientific and technical data and information deemed to be of continuing reference value. NASA's counterpart of peer-reviewed formal professional papers but has less stringent limitations on manuscript length and extent of graphic presentations.

- TECHNICAL MEMORANDUM. Scientific and technical findings that are preliminary or of specialized interest, e.g., quick release reports, working papers, and bibliographies that contain minimal annotation. Does not contain extensive analysis.

- CONTRACTOR REPORT. Scientific and technical findings by NASA-sponsored contractors and grantees.

- CONFERENCE PUBLICATION. Collected papers from scientific and technical conferences, symposia, seminars, or other meetings sponsored or cosponsored by NASA.

- SPECIAL PUBLICATION. Scientific, technical, or historical information from NASA programs, projects, and mission, often concerned with subjects having substantial public interest.

- TECHNICAL TRANSLATION. English-language translations of foreign scientific and technical material pertinent to NASA's mission.

Specialized services that complement the STI Program Office's diverse offerings include creating custom thesauri, building customized databases, organizing and publishing research results…even providing videos.

For more information about the NASA STI Program Office, see the following:

- Access the NASA STI Program Home Page at ***http://www.sti.nasa.gov***

- E-mail your question via the Internet to help@sti.nasa.gov

- Fax your question to the NASA Access Help Desk at (301) 621–0134

- Telephone the NASA Access Help Desk at (301) 621–0390

- Write to:
  NASA Access Help Desk
  NASA Center for AeroSpace Information
  7121 Standard Drive
  Hanover, MD 21076–1320

NASA/TM—2001–211301

Equations of Motion for the g-LIMIT Microgravity Vibration Isolation System

Y.K. Kim and M.S. Whorton
Marshall Space Flight Center, Marshall Space Flight Center, Alabama

National Aeronautics and
Space Administration

Marshall Space Flight Center • MSFC, Alabama 35812

October 2001

TRADEMARKS

Trade names and trademarks are used in this report for identification only. This usage does not constitute an official endorsement, either expressed or implied, by the National Aeronautics and Space Administration.

Available from:

NASA Center for AeroSpace Information
7121 Standard Drive
Hanover, MD 21076–1320
(301) 621–0390

National Technical Information Service
5285 Port Royal Road
Springfield, VA 22161
(703) 487–4650

TABLE OF CONTENTS

1. INTRODUCTION 1

2. FORMULATION OF SIX-DOF RIGID BODY EQUATIONS OF MOTION 2

3. STATE-SPACE MODEL FORMULATION 17

3.1 Acceleration Sensor Measurement Model 17
3.2 Position Sensor Measurement Model 19
3.3 State and Output Equations 20

4. UNCERTAINTY MODELING FOR CONTROL DESIGN AND ANALYSIS 22

5. MATHEMATICAL MODEL VERIFICATION 27

6. CONCLUSIONS 28

REFERENCES 29

LIST OF ACRONYMS

cg	center of gravity
CM	center of mass
DOF	degree of freedom
g-LIMIT	GLovebox Integrated Microgravity Isolation Technology
IM	isolator module
MSG	microgravity science glovebox
PIP	power and information processor
STABLE	supression of transient acceleration by levitation evaluation
TM	technical memorandum
w.r.t.	with respect to

TECHNICAL MEMORANDUM

EQUATIONS OF MOTION FOR THE g-LIMIT MICROGRAVITY VIBRATION ISOLATION SYSTEM

1. INTRODUCTION

A desirable microgravity environment for experimental science payloads may require an active vibration isolation control system. A vibration isolation system named g-LIMIT (GLovebox Integrated Microgravity Isolation Technology) is being developed by NASA Marshall Space Flight Center to support microgravity science experiments using the microgravity science glovebox (MSG).[1]

In order to provide a quiescent acceleration environment for an experiment, an active isolation system must sense and cancel the inertial accelerations applied to the experiment. With g–LIMIT, this is accomplished by six independent control actuation channels that provide six independent forces to a platform upon which the experiment resides. g-LIMIT is designed around three integrated isolator modules (IM's), each of which is comprised of a dual-axis actuator, two axes of acceleration sensing, two axes of position sensing, and control electronics. The base of the isolator is the power and information processor (PIP), which is attached to the MSG work volume floor. Flexible umbilicals transferring power and data are the only physical connection between the isolated payload mounting structure and the PIP.

In this technical memorandum (TM), the six-degree-of-freedom (DOF) linearized equations of motion for g-LIMIT are derived. Although the motivation for this model development is control design and analysis of g-LIMIT, the equations are derived for a general configuration and may be used for other isolation systems as well. Since the translational motion of the isolation platform is constrained to 1 cm travel in any direction and hence the rotational motion is also small, small angle and small displacement assumptions are used to derive linearized equations of motion. It was also assumed that the base has only translational motion that is transmitted to the platform.

2. FORMULATION OF SIX-DOF RIGID BODY EQUATIONS OF MOTION

In this section, linearized equations of motion for the six-DOF rigid body dynamic system of the platform are derived using a Newtonian approach. The simplified configuration of the g-LIMIT system is shown in figure 1. From figure 1, the following position vectors in inertial coordinates system are defined: position vector from the origin of the inertial coordinates to the origin of the base coordinates, $\vec{R}_0$; three initial position vectors from the origin of the base coordinates to three position sensors, $\vec{R}_{p_i}$ $(i=1,2,3)$; two initial position vectors from the origin of the base coordinates to two umbilical attach points on the base, $\vec{R}_{u_i}$ $(i=1,2)$; two initial position vectors from the umbilical attach points on the base to the umbilical attach points on the platform, $\vec{S}_i$ $(i=1,2)$; initial position vector from the origin of the base coordinates to the origin of the platform coordinates, $\vec{R}_b$; and relative displacement vector, $\vec{r}$ of the platform at the origin of the platform coordinates, three components (x, y, z) of which are translational degrees of freedom for the equations of motion of the platform. The following position vectors in a platform body coordinates system are also defined: position vector from the origin of the platform coordinates to the center of mass (CM) of the platform, $\vec{r}_c$; position vector from the origin of the platform coordinates to the external force's acting point on the platform, $\vec{r}_d$; two position vectors from the origin of the platform coordinates to two umbilical attach points on the platform, $\vec{r}_{u_i}$ $(i=1,2)$; three position vectors from the origin of the platform coordinates to three position sensors, $\vec{r}_{p_i}$ $(i=1,2,3)$; three position vectors from the origin of the platform coordinates to three accelerometers, $\vec{r}_{a_i}$ $(i=1,2,3)$; and three position vectors from the origin of the platform coordinates to three actuators, $\vec{r}_{f_i}$ $(i=1,2,3)$.

During the derivation of the equations of motion, vectors will be expressed by the product of a row matrix, whose elements are its three components in chosen coordinates, and a column matrix, whose elements are three orthogonal unit vectors of the coordinates. For example, $\vec{R}_0$ and $\vec{r}_{a_i}$ can be expressed as follows:

$$\vec{R}_0 = R_0\,\Gamma^T \tag{1}$$

and

$$\vec{r}_{a_i} = r_{a_i}\,\Lambda^T, \qquad (i=1,2,3)\ , \tag{2}$$

where $R_0 = \left[X_0\ Y_0\ Z_0\right]$ is a row matrix of three components of $\vec{R}_0$ in the inertial coordinate system and $\Gamma = \left[\vec{I}\ \vec{J}\ \vec{K}\right]$ is a row matrix of three orthogonal unit vectors of the inertial coordinate system. $r_{a_i} = [x_{a_i}\ y_{a_i}\ z_{a_i}]$ is a row matrix of three components of $\vec{r}_{a_i}$ in the platform body coordinate system and $\Lambda = \left[\vec{i}\ \vec{j}\ \vec{k}\right]$ is a row matrix of three orthogonal unit vectors of the platform coordinate system.

For the rotational motion of the platform, three rotational DOF ($\theta_x, \theta_y, \theta_z$) are chosen to represent three angles about x, y, z axis of the platform coordinates, respectively. With the rotational sequence

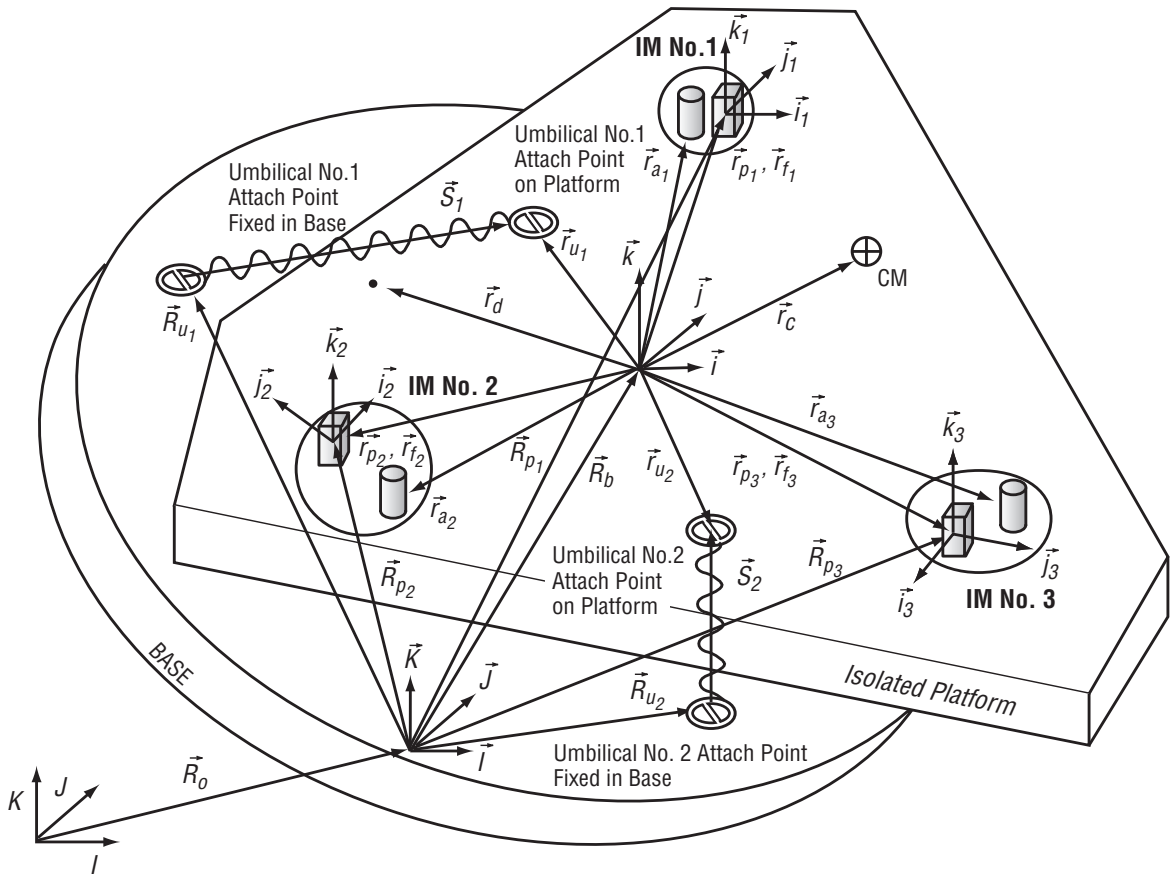

Figure 1. g-LIMIT coordinate frame and vector definitions.

of $\theta_x, \theta_y, \theta_z$, a transformation matrix C, that relates three orthogonal unit vectors of the inertial coordinates system to those of the platform coordinates system, is given by

$$\Lambda = \Gamma C \tag{3a}$$

and its transpose

$$\Lambda^T = C^T \Gamma^T \tag{3b}$$

with

$$C = \begin{bmatrix} c2*c3 & -c2*s3 & s2 \\ s1*s2*c3+s3*c1 & -s1*s2*s3+c3*c1 & -s1*c2 \\ -c1*s2*c3+s3*s1 & c1*s2*s3+c3*s1 & c1*c2 \end{bmatrix},$$

where $c1 = \cos\theta_x$, $s1 = \sin\theta_x$, $c2 = \cos\theta_y$, $s2 = \sin\theta_y$, $c3 = \cos\theta_z$, and $s3 = \sin\theta_z$.

Assuming the rotational angles are small, the transformation matrix C may be simplified as

$$C \approx \begin{bmatrix} 1 & -\theta_z & \theta_y \\ \theta_z & 1 & -\theta_x \\ -\theta_y & \theta_x & 1 \end{bmatrix} . \tag{4}$$

Defining a rotational skew matrix as

$$\tilde{\theta} = \begin{bmatrix} 0 & -\theta_z & \theta_y \\ \theta_z & 0 & -\theta_x \\ -\theta_y & \theta_x & 0 \end{bmatrix} , \tag{5}$$

the rotational transformation matrix C and its transposed matrix can be rewritten

$$C = I_{3\times3} + \tilde{\theta} \tag{6a}$$

and

$$C^T = I_{3\times3} - \tilde{\theta} , \tag{6b}$$

where $I_{3\times3}$ is a 3 by 3 identity matrix. Then eq. (3) can also be rewritten

$$\Lambda = \Gamma\,(I_{3\times3} + \tilde{\theta}) \tag{7a}$$

and

$$\Lambda^T = (I_{3\times3} - \tilde{\theta})\Gamma^T . \tag{7b}$$

A skew matrix representation of any row matrix is also defined similar to eq. (5). For example, the skew matrix of $r_{a_i} = [x_{a_i}\ y_{a_i}\ z_{a_i}]$ is denoted as $\tilde{r}_{a_i}$ and defined by

$$\tilde{r}_{a_i} = \begin{bmatrix} 0 & -z_{a_i} & y_{a_i} \\ z_{a_i} & 0 & -x_{a_i} \\ -y_{a_i} & x_{a_i} & 0 \end{bmatrix} . \tag{8}$$

In order to derive six-DOF equations of motion of the platform using a Newtonian approach, absolute translational and angular accelerations at the platform CM are needed in the inertial coordinates

system. The position vector from the origin of inertial coordinates system to the CM of the platform, $\vec{r}_{cm}$ is defined by

$$\begin{aligned} \vec{r}_{cm} &= \vec{R}_0 + \vec{R}_b + \vec{r} + \vec{r}_c \\ &= R_0\ \Gamma^T + R_b\ \Gamma^T + r\ \Gamma^T + r_c\ \Lambda^T \quad , \end{aligned} \tag{9}$$

where $r = [x, y, z]$ is a row matrix whose three components are translational degrees of freedom for the equations of motion of the platform.

The absolute linear velocity of the platform CM is given by differentiating $\vec{r}_{cm}$ w.r.t. time:

$$\dot{\vec{r}}_{cm} = \dot{R}_0\ \Gamma^T + \dot{r}\ \Gamma^T + \omega\ \Lambda^T \times r_c\ \Lambda^T \quad , \tag{10}$$

where $\omega = \begin{bmatrix} \dot{\theta}_x & \dot{\theta}_y & \dot{\theta}_z \end{bmatrix}$ is a row matrix whose three components are angular velocities about x, y, and z axis of the platform coordinates. The absolute linear acceleration of the platform CM is given by differentiating $\dot{\vec{r}}_{cm}$ w.r.t. time:

$$\ddot{\vec{r}}_{cm} = \ddot{R}_0\ \Gamma^T + \ddot{r}\ \Gamma^T + \dot{\omega}\ \Lambda^T \times r_c\ \Lambda^T + \omega\ \Lambda^T \times \omega\ \Lambda^T \times r_c\ \Lambda^T \quad , \tag{11}$$

where $\dot{\omega} = \begin{bmatrix} \ddot{\theta}_x & \ddot{\theta}_y & \ddot{\theta}_z \end{bmatrix}$ is a row matrix whose three components are angular accelerations about x, y, and z axis of the platform coordinates. Equation (11) may be reduced to the following linearized equation by neglecting terms higher than first order under the assumption of small angles and displacements:

$$\ddot{\vec{r}}_{cm} \approx \ddot{R}_0\ \Gamma^T + \ddot{r}\ \Gamma^T + \dot{\omega}\ \tilde{r}_c\ \Gamma^T \quad . \tag{12}$$

Therefore, the translational equation of motion for the platform becomes

$$\begin{aligned} \vec{F} &= M\ \ddot{\vec{r}}_{cm} \\ &= M\ \ddot{R}_0\ \Gamma^T + M\ \ddot{r}\ \Gamma^T + M\ \dot{\omega}\ \tilde{r}_c\ \Gamma^T \quad , \end{aligned} \tag{13}$$

where M is mass of the platform and total acting force at the platform CM, $\vec{F}$ is defined by

$$\vec{F} = F\ \Gamma^T \tag{14}$$

with $F = \left[F_X \; F_Y \; F_Z \right]$ whose three components are acting force at the platform CM to the directions of X, Y, and Z axis of the inertial coordinate system.

Defining a state $\boldsymbol{X}$ as a column matrix $\left[x \; y \; z \; \theta_x \; \theta_y \; \theta_z \right]^T$, the translational equation of motion of the platform may be rewritten as the following matrix form:

$$F^T = M \, I_{3\times3} \, \ddot{R}_0{}^T + M \left[I_{3\times3} \; -\tilde{r}_c \right] \ddot{\mathbf{X}} \; . \tag{15}$$

The rotational equation of motion for the platform may be derived from

$$\vec{M}_C = \dot{\vec{H}} \quad , \tag{16}$$

where the total acting moment vector at the platform CM is defined by $\vec{M}_C = M_C \, \Gamma^T$ with $M_C = \left[M_X \; M_Y \; M_Z \right]$ whose three elements are the components of the moment acting at the platform CM about X, Y, and Z axis of the inertial coordinates system. $\vec{H}$ is the angular moment vector at the platform CM and is defined as

$$\vec{H} = \omega \, I_m{}^T \, \Lambda^T \quad , \tag{17}$$

where I_m is the mass moment of inertia matrix about the platform CM and defined as

$$I_m = \begin{bmatrix} I_{xx} & -I_{xy} & -I_{xz} \\ -I_{yx} & I_{yy} & -I_{yz} \\ -I_{zx} & -I_{zy} & I_{zz} \end{bmatrix} . \tag{18}$$

The time derivative of the angular moment vector at the platform CM, $\dot{\vec{H}}$, is given by

$$\begin{aligned} \dot{\vec{H}} &= \dot{\omega} \, I_m{}^T \Lambda^T + \omega \Lambda^T \times \omega \, I_m{}^T \Lambda^T \\ &= (\dot{\omega} \, I_m{}^T - \omega \, I_m{}^T \tilde{\omega}) \left(I_{3\times3} - \tilde{\theta} \right) \Gamma^T \\ &\approx (\dot{\omega} \, I_m{}^T - \omega \, I_m{}^T \tilde{\omega}) \, \Gamma^T \\ &\approx \dot{\omega} \, I_m{}^T \, \Gamma^T . \end{aligned} \tag{19}$$

Thus, by combining eqs. (16) and (19), the rotational equation of motion of the platform can be written

$$M_C\ \Gamma^T = \dot{\omega}\ I_m{}^T\ \Gamma^T\ . \tag{20}$$

Rewriting eq. (20) in matrix form using the state $\boldsymbol{X}$,

$$M_C{}^T = \begin{bmatrix} 0_{3\times3} & I_m \end{bmatrix} \ddot{\mathbf{X}}\ . \tag{21}$$

Finally, combining the translational equation of motion (15) and rotational equation of motion (21) yields the following six-DOF rigid body equations of motion of the platform:

$$\begin{bmatrix} F^T \\ M_C{}^T \end{bmatrix} = \begin{bmatrix} M\ I_{3\times3} \\ 0_{3\times3} \end{bmatrix} \ddot{R}_0{}^T + \begin{bmatrix} M\ I_{3\times3} & -M\ \tilde{r}_c \\ 0_{3\times3} & I_m \end{bmatrix} \ddot{\mathbf{X}}\ . \tag{22}$$

The next step is to define the total acting force and moment at the platform CM. The total force acting at the platform CM, $\vec{F}$ is comprised of three actuator forces $\vec{F}_{a_m}\ (m=1,2,3)$, two umbilical spring forces $\vec{F}_{u_i}\ (i=1,2)$, two umbilical damping forces $\vec{F}_{du_i}\ (i=1,2)$, and a direct disturbing force $\vec{F}_d$. As shown in figure 1, three actuators are assumed to be located at the counterclockwise azimuths of $\theta_1, \theta_2, \theta_3$ about the z axis from the positive x axis. Three row matrices of the unit vectors of each actuator coordinates are defined as $\Lambda_m = \begin{bmatrix} \vec{i}_m\ \vec{j}_m\ \vec{k}_m \end{bmatrix}\ (m=1,2,3)$.

The relationship between the unit vectors system of platform coordinates and the unit vectors system of three actuator coordinates is given by

$$\Lambda_m = \Lambda C_m \qquad (m=1,2,3)\ , \tag{23}$$

where

$$C_m = \begin{bmatrix} \cos\theta_m & -\sin\theta_m & 0 \\ \sin\theta_m & \cos\theta_m & 0 \\ 0 & 0 & 1 \end{bmatrix}\ . \tag{24}$$

Transposing eq. (23) with eq. (3) yields

$$\begin{aligned} \Lambda_m{}^T &= C_m{}^T\ \Lambda^T \\ &= C_m{}^T\ C^T\ \Gamma^T \qquad (m=1,2,3)\ . \end{aligned} \tag{25}$$

The force that is generated by the mth actuator is defined by

$$\vec{F}_{a_m} = \begin{bmatrix} F_{a_{mx}} & 0 & F_{a_{mz}} \end{bmatrix} \Lambda_m{}^T \quad (m = 1,2,3) \quad , \tag{26}$$

where $F_{a_{mx}}$ and $F_{a_{mz}}$ are the two orthogonal x and z axis components of the mth actuator force. These force components are determined by the control system.

Substitution of eqs. (6) and (25) into eq. (26) yields

$$\begin{aligned} \vec{F}_{a_m} &= \begin{bmatrix} F_{a_{mx}} & 0 & F_{a_{mz}} \end{bmatrix} C_m{}^T \left(I_{3\times3} - \tilde{\theta} \right) \Gamma^T \\ &= \begin{bmatrix} F_{a_{mx}} & F_{a_{mz}} \end{bmatrix} \begin{bmatrix} 1 & 0 & 0 \\ 0 & 0 & 1 \end{bmatrix} C_m{}^T \left(I_{3\times3} - \tilde{\theta} \right) \Gamma^T \quad (m = 1, 2, 3) \quad . \end{aligned} \tag{27}$$

Rewriting eq. (27) in matrix form, equation of three actuator forces becomes

$$F_{a_m}{}^T = \left(I_{3\times3} + \tilde{\theta} \right) C_m \begin{bmatrix} 1 & 0 \\ 0 & 0 \\ 0 & 1 \end{bmatrix} \begin{Bmatrix} F_{a_{mx}} \\ F_{a_{mz}} \end{Bmatrix} \qquad (m = 1,2,3) \quad . \tag{28}$$

The spring force due to the umbilical may be determined as the product of the umbilical spring coefficient and the deformation vector of the umbilical. The deformation vector of the ith umbilical is given by

$$\begin{aligned} \vec{d}_{u_i} &= (\vec{R}_b + \vec{r} + \vec{r}_{u_i} - \vec{R}_{u_i}) - \vec{S}_i \\ &= R_b \Gamma^T + r\Gamma^T + r_{u_i} \Lambda^T - R_{u_i} \Gamma^T - S_i \Gamma^T \\ &= R_b \Gamma^T + r\Gamma^T + r_{u_i} (I_{3\times3} - \tilde{\theta}) \Gamma^T - R_{u_i} \Gamma^T - S_i \Gamma^T \\ &= (R_b + r_{u_i} - R_{u_i} - S_i) \Gamma^T + r\Gamma^T + \begin{bmatrix} \theta_x & \theta_y & \theta_z \end{bmatrix} \tilde{r}_{u_i} \Gamma^T \quad (i = 1,2) \quad . \end{aligned} \tag{29}$$

Since the first term of eq. (29) is zero, eq. (29) becomes

$$\vec{d}_{u_i} = \left[x\ y\ z\right]\Gamma^T + \left[\theta_x\ \theta_y\ \theta_z\right]\tilde{r}_{u_i}\Gamma^T$$

$$= \mathbf{X}^T \begin{Bmatrix} I_{3\times3} \\ \tilde{r}_{u_i} \end{Bmatrix} \Gamma^T \qquad (i = 1, 2) \quad . \tag{30}$$

Writing the above equation in the matrix form,

$$d_{u_i}{}^T = \begin{Bmatrix} x \\ y \\ z \end{Bmatrix} + \tilde{r}_{u_i}{}^T \begin{Bmatrix} \theta_x \\ \theta_y \\ \theta_z \end{Bmatrix}$$

$$= \begin{bmatrix} I_{3\times3} & -\tilde{r}_{u_i} \end{bmatrix} \mathbf{X} \qquad (i = 1, 2) \quad . \tag{31}$$

Therefore, the spring force due to the *i*th umbilical, $F_{u_i}{}^T$ can be given by

$$F_{u_i}{}^T = K_{u_i}\ d_{u_i}{}^T$$

$$= K_{u_i} \begin{bmatrix} I_{3\times3} & -\tilde{r}_{u_i} \end{bmatrix} \mathbf{X} \qquad (i = 1, 2) \quad , \tag{32}$$

and in the vector form

$$\vec{F}_{u_i} = \mathbf{X}^T \begin{Bmatrix} I_{3\times3} \\ \tilde{r}_{u_i} \end{Bmatrix} K_{u_i}{}^T \Gamma^T \qquad (i = 1, 2) \quad , \tag{33}$$

where K_{u_i} is a 3 by 3 stiffness coefficient matrix whose elements are spring stiffness of the *i*th umbilical in the direction of the inertial coordinates.

The damping force due to the umbilical may be determined by product of the umbilical damping coefficient and the time derivative of deformation vector of the umbilical. Neglecting higher order terms, the time derivative of deformation vector of the *i*th umbilical is given by

$$\dot{\vec{u}}_i = \left[\dot{x}\ \dot{y}\ \dot{z}\right]\Gamma^T + \left[\dot{\theta}_x\ \dot{\theta}_y\ \dot{\theta}_z\right]\tilde{r}_{u_i}\Gamma^T$$

$$= \dot{\mathbf{X}}^T \begin{Bmatrix} I_{3\times3} \\ \tilde{r}_{u_i} \end{Bmatrix} \Gamma^T \qquad (i = 1, 2) \quad . \tag{34}$$

Writing eq. (34) in the matrix form,

$$\dot{u}_i^T = \begin{Bmatrix} \dot{x} \\ \dot{y} \\ \dot{z} \end{Bmatrix} + \tilde{r}_{u_i}{}^T \begin{Bmatrix} \dot{\theta}_x \\ \dot{\theta}_y \\ \dot{\theta}_z \end{Bmatrix}$$

$$= \left[I_{3\times3} \quad -\tilde{r}_{u_i}\right]\dot{\mathbf{X}} \qquad (i = 1, 2) \quad . \tag{35}$$

Therefore, the damping force due to the ith umbilical, $F_{ud_i}{}^T$ can be determined by

$$F_{ud_i}{}^T = C_{u_i}\ \dot{u}_i^T$$

$$= C_{u_i}\left[I_{3\times3} \quad -\tilde{r}_{u_i}\right]\dot{\mathbf{X}} \qquad (i = 1, 2) \quad , \tag{36}$$

and in the vector form

$$\vec{F}_{ud_i} = \dot{\mathbf{X}}^T \begin{Bmatrix} I_{3\times3} \\ \tilde{r}_{u_i} \end{Bmatrix} C_{u_i}{}^T \Gamma^T \qquad (i = 1, 2) \quad , \tag{37}$$

where C_{u_i} is a 3 by 3 matrix whose elements are damping coefficient of the ith umbilical in the directions of the inertial coordinates.

A disturbance force $\vec{F}_d$, assumed to be applied directly at the position $\vec{r}_d$ of the platform, is defined as

$$\vec{F}_d = f_d\ \Lambda^T$$

$$= f_d\,(I_{3\times3} - \tilde{\theta})\Gamma^T . \tag{38}$$

Rewriting eq. (38) in matrix form,

$$F_d{}^T = (I_{3\times3} + \tilde{\theta})\, f_d{}^T , \tag{39}$$

where f_d is a row matrix whose three elements are x, y, and z axis components of the disturbance force in the platform coordinates.

Consequently, the total force acting on the CM of the platform, F^T can be determined by combining eqs. (28), (32), (36), and (39):

$$F^T = \sum_{m=1}^{3} F_{a_m}{}^T - \sum_{i=1}^{2} F_{u_i}{}^T - \sum_{i=1}^{2} F_{ud_i}{}^T + F_d{}^T . \tag{40}$$

Define the actuator force input vector as

$$f_a = \left[F_{a_{1x}} \;\; F_{a_{1z}} \;\; F_{a_{2x}} \;\; F_{a_{2z}} \;\; F_{a_{3x}} \;\; F_{a_{3z}} \right] \tag{41}$$

and

$$U_T = \begin{bmatrix} \begin{bmatrix} 1 & 0 \\ 0 & 0 \\ 0 & 1 \end{bmatrix} & 0_{3\times2} & 0_{3\times2} \\ 0_{3\times2} & \begin{bmatrix} 1 & 0 \\ 0 & 0 \\ 0 & 1 \end{bmatrix} & 0_{3\times2} \\ 0_{3\times2} & 0_{3\times2} & \begin{bmatrix} 1 & 0 \\ 0 & 0 \\ 0 & 1 \end{bmatrix} \end{bmatrix} , \tag{42}$$

where $0_{3\times2}$ is a 3 by 2 zero matrix. Then,

$$\begin{aligned} F^T = {} & \left(I_{3\times3} + \tilde{\theta}\right) \left[C_1 \quad C_2 \quad C_3 \right] U_T \; f_a{}^T \\ & - \sum_{i=1}^{2} K_{u_i} \left[I_{3\times3} \quad -\tilde{r}_{u_i} \right] \mathbf{X} - \sum_{i=1}^{2} C_{u_i} \left[I_{3\times3} \quad -\tilde{r}_{u_i} \right] \dot{\mathbf{X}} \\ & + (I_{3\times3} + \tilde{\theta})\, f_d{}^T . \end{aligned} \tag{43}$$

In order to complete the derivation of equations of motion of the platform, the total moment acting at the platform CM is determined next. The total moment acting at the platform CM consists of moments due to three actuator forces, $\vec{M}_{a_m}(m=1,2,3)$; moments due to two umbilical spring forces, $\vec{M}_{u_i}(i=1,2)$; moments due to two umbilical damping forces, $\vec{M}_{du_i}(i=1,2)$; and the moment due to direct disturbing force, $\vec{M}_d$.

The moment about the platform CM due to the *m*th actuator force is given by

$$\begin{aligned}\vec{M}_{a_m} &= (\vec{r}_{f_m} - \vec{r}_c) \times \vec{F}_{a_m} \\ &= (r_{f_m} - r_c)\Lambda^T \times \vec{F}_{a_m} \\ &\equiv r_{Fa_m}\Lambda^T \times \vec{F}_{a_m} \qquad (m=1,2,3) \quad ,\end{aligned} \tag{44}$$

where $r_{Fa_m} = \left[(x_{f_m} - x_c) \;\; (y_{f_m} - y_c) \;\; (z_{f_m} - z_c)\right]$.

Substitution of eqs. (7b) and (27) into eq. (44) yields

$$\begin{aligned}\vec{M}_{a_m} &= r_{Fa_m}(I_{3\times3} - \tilde{\theta})\Gamma^T \times \begin{bmatrix} F_{a_{mx}} & F_{a_{mz}} \end{bmatrix} \begin{bmatrix} 1 & 0 & 0 \\ 0 & 0 & 1 \end{bmatrix} C_m{}^T \left(I_{3\times3} - \tilde{\theta}\right)\Gamma^T \\ &\approx -\begin{bmatrix} F_{a_{mx}} & F_{a_{mz}} \end{bmatrix} \begin{bmatrix} 1 & 0 & 0 \\ 0 & 0 & 1 \end{bmatrix} C_m{}^T \left(I_{3\times3} - \tilde{\theta}\right) \tilde{r}_{Fa_m}\Gamma^T \\ &\quad + \begin{bmatrix} F_{a_{mx}} & F_{a_{mz}} \end{bmatrix} \begin{bmatrix} 1 & 0 & 0 \\ 0 & 0 & 1 \end{bmatrix} C_m{}^T (r_{Fa_m}\tilde{\theta})^{\sim}\, \Gamma^T \qquad (m=1,\,2,\,3) \\ &= \begin{bmatrix} F_{a_{mx}} & F_{a_{mz}} \end{bmatrix} \begin{bmatrix} 1 & 0 & 0 \\ 0 & 0 & 1 \end{bmatrix} C_m{}^T \left[-\tilde{r}_{Fa_m} + \tilde{\theta}\,\tilde{r}_{Fa_m} + (r_{Fa_m}\tilde{\theta})^{\sim}\right]\Gamma^T .\end{aligned} \tag{45}$$

Written in matrix form, eq. (45) becomes

$$M_{a_m}{}^T = \left[\tilde{r}_{Fa_m} + \tilde{r}_{Fa_m}\tilde{\theta} - (r_{Fa_m}\tilde{\theta})^{\sim}\right] C_m \begin{bmatrix} 1 & 0 \\ 0 & 0 \\ 0 & 1 \end{bmatrix} \begin{Bmatrix} F_{a_{mx}} \\ F_{a_{mz}} \end{Bmatrix} \quad (m=1,\,2,\,3) \quad , \tag{46}$$

where $(\;)^{\sim}$ is a skew matrix of the row matrix inside the parentheses.

The moment about the platform CM due to the ith umbilical spring force can be determined by

$$\begin{aligned}\vec{M}_{u_i} &= (\vec{r}_{u_i} - \vec{r}_c) \times \vec{F}_{u_i} \\ &= (r_{u_i} - r_c)\Lambda^T \times \vec{F}_{u_i} \\ &\equiv r_{Fu_i}\Lambda^T \times \vec{F}_{u_i} \qquad (i = 1, 2) \quad ,\end{aligned} \tag{47}$$

where $r_{Fu_i} = \left[(x_{u_i} - x_c) \;\; (y_{u_i} - y_c) \;\; (z_{u_i} - z_c)\right]$.

Substituting eqs. (7b) and (33) into eq. (47) gives

$$\begin{aligned}\vec{M}_{u_i} &= r_{Fu_i}(I_{3\times3} - \tilde{\theta})\Gamma^T \times \mathbf{X}^T \begin{Bmatrix} I_{3\times3} \\ \tilde{r}_{u_i} \end{Bmatrix} K_{u_i}{}^T \Gamma^T \\ &\approx -\mathbf{X}^T \begin{Bmatrix} I_{3\times3} \\ \tilde{r}_{u_i} \end{Bmatrix} K_{u_i}{}^T \; \tilde{r}_{Fu_i} \; \Gamma^T \qquad (i = 1, 2) \quad .\end{aligned} \tag{48}$$

Writing eq. (48) in matrix form,

$$M_{u_i}{}^T = \tilde{r}_{Fu_i} \, K_{u_i} \left[I_{3\times3} \quad -\tilde{r}_{u_i} \right] \mathbf{X} \qquad (i = 1, 2) \, . \tag{49}$$

The moment about the platform CM due to the ith umbilical damping force can be determined by

$$\vec{M}_{ud_i} = r_{Fu_i}\Lambda^T \times \vec{F}_{ud_i} \qquad (i = 1, 2) \quad . \tag{50}$$

Substituting eqs. (7b) and (37) into eq. (50) gives

$$\begin{aligned}\vec{M}_{ud_i} &= r_{Fu_i}(I_{3\times3} - \tilde{\theta})\Gamma^T \times \dot{\mathbf{X}}^T \begin{Bmatrix} I_{3\times3} \\ \tilde{r}_{u_i} \end{Bmatrix} C_{u_i}{}^T \Gamma^T \\ &\approx -\dot{\mathbf{X}}^T \begin{Bmatrix} I_{3\times3} \\ \tilde{r}_{u_i} \end{Bmatrix} C_{u_i}{}^T \; \tilde{r}_{Fu_i} \; \Gamma^T \qquad (i = 1, 2)\end{aligned} \tag{51}$$

and in matrix form

$$M_{ud_i}{}^T = \tilde{r}_{Fu_i}\, C_{u_i} \left[I_{3\text{x}3} \quad -\tilde{r}_{u_i} \right] \dot{\mathbf{X}} \qquad (i = 1, 2) \quad . \tag{52}$$

The moment about the platform CM due to the direct disturbance force $\vec{F}_d$ can be determined by

$$\begin{aligned} \vec{M}_d &= (\vec{r}_d - \vec{r}_c) \times \vec{F}_d \\ &= (r_d - r_c)\Lambda^T \times \vec{F}_d \\ &\equiv r_{Fd}\Lambda^T \times \vec{F}_d \ , \end{aligned} \tag{53}$$

where $r_{Fd} = \left[(x_d - x_c) \ \ (y_d - y_c) \ \ (z_d - z_c) \right]$.

Substituting eqs. (7b) and (38) into eq. (53) gives

$$\begin{aligned} \vec{M}_d &= r_{Fd}(I_{3\times3} - \tilde{\theta})\Gamma^T \times f_d\,(I_{3\times3} - \tilde{\theta})\Gamma^T \\ &\approx -f_d\ \tilde{r}_{Fd}\ \Gamma^T + f_d\ (r_{Fd}\ \tilde{\theta})^{\sim}\ \Gamma^T + f_d\,\tilde{\theta}\ \tilde{r}_{Fd}\ \Gamma^T \\ &= f_d \left[-\tilde{r}_{Fd} + (r_{Fd}\ \tilde{\theta})^{\sim} + \tilde{\theta}\ \tilde{r}_{Fd} \right] \Gamma^T \end{aligned} \tag{54}$$

and in matrix form

$$M_d{}^T = \left[\tilde{r}_{Fd} + \tilde{r}_{Fd}\,\tilde{\theta} - (r_{Fd}\ \tilde{\theta})^{\sim} \right] f_d{}^T \quad . \tag{55}$$

Consequently, the total moment about the platform CM, $M_C{}^T$ can be determined by combining eqs. (46), (49), (52), and (55):

$$
\begin{aligned}
M_C{}^T &= \sum_{m=1}^{3} M_{a_m}{}^T - \sum_{i=1}^{2} M_{u_i}{}^T - \sum_{i=1}^{2} M_{ud_i}{}^T + M_d{}^T \\
&= \sum_{m=1}^{3} \left[\tilde{r}_{Fa_m} + \tilde{r}_{Fa_m}\tilde{\theta} - (r_{Fa_m}\tilde{\theta})^{\sim} \right] C_m \begin{bmatrix} 1 & 0 \\ 0 & 0 \\ 0 & 1 \end{bmatrix} \begin{Bmatrix} F_{a_{mx}} \\ F_{a_{mz}} \end{Bmatrix} \\
&\quad - \sum_{i=1}^{2} \tilde{r}_{Fu_i} K_{u_i} \left[I_{3\times 3} \quad -\tilde{r}_{u_i} \right] \mathbf{X} \\
&\quad - \sum_{i=1}^{2} \tilde{r}_{Fu_i} C_{u_i} \left[I_{3\times 3} \quad -\tilde{r}_{u_i} \right] \dot{\mathbf{X}} \\
&\quad + \left[\tilde{r}_{Fd} + \tilde{r}_{Fd}\tilde{\theta} - (r_{Fd}\tilde{\theta})^{\sim} \right] f_d{}^T \ .
\end{aligned} \tag{56}
$$

Defining the following skew matrices,

$$
\tilde{R}_{Fa_m} \equiv \left[\tilde{r}_{Fa_m} + \tilde{r}_{Fa_m}\tilde{\theta} - (r_{Fa_m}\tilde{\theta})^{\sim} \right] \tag{57a}
$$

and

$$
\tilde{R}_{Fd} \equiv \left[\tilde{r}_{Fd} + \tilde{r}_{Fd}\tilde{\theta} - (r_{Fd}\tilde{\theta})^{\sim} \right] \ , \tag{57b}
$$

eq. (56) can be rewritten as

$$
\begin{aligned}
M_C{}^T &= \left[\left(\tilde{R}_{Fa_1} C_1 \right) \quad \left(\tilde{R}_{Fa_2} C_2 \right) \quad \left(\tilde{R}_{Fa_3} C_3 \right) \right] U_T \, f_a{}^T \\
&\quad - \sum_{i=1}^{2} \tilde{r}_{Fu_i} K_{u_i} \left[I_{3\text{x}3} \quad -\tilde{r}_{u_i} \right] \mathbf{X} \\
&\quad - \sum_{i=1}^{2} \tilde{r}_{Fu_i} C_{u_i} \left[I_{3\text{x}3} \quad -\tilde{r}_{u_i} \right] \dot{\mathbf{X}} \\
&\quad + \tilde{R}_{Fd} \, f_d{}^T .
\end{aligned} \tag{58}
$$

Finally, the equation of motion for six-DOF rigid body motion of the platform can be determined by substituting eqs. (43) and (58) into eq. (22):

$$\begin{bmatrix} M\, I_{3\times3} & -M\,\tilde{r}_c \\ 0_{3\times3} & I_m \end{bmatrix}\ddot{\mathbf{X}} + \sum_{i=1}^{2}\begin{bmatrix} C_{u_i}\begin{bmatrix} I_{3\times3} & -\tilde{r}_{u_i} \end{bmatrix} \\ \tilde{r}_{Fu_i}\, C_{u_i}\begin{bmatrix} I_{3\times3} & -\tilde{r}_{u_i} \end{bmatrix} \end{bmatrix}\dot{\mathbf{X}}$$

$$+\sum_{i=1}^{2}\begin{bmatrix} K_{u_i}\begin{bmatrix} I_{3\times3} & -\tilde{r}_{u_i} \end{bmatrix} \\ \tilde{r}_{Fu_i}\, K_{u_i}\begin{bmatrix} I_{3\times3} & -\tilde{r}_{u_i} \end{bmatrix} \end{bmatrix}\mathbf{X} = -\begin{bmatrix} M\, I_{3\times3} \\ 0_{3\times3} \end{bmatrix}\ddot{R}_0{}^T + \begin{bmatrix} (I_{3\times3}+\tilde{\theta}) \\ \tilde{R}_{Fd} \end{bmatrix} f_d{}^T$$

$$+\begin{bmatrix} \left(I_{3\times3}+\tilde{\theta}\right)\begin{bmatrix} C_1 & C_2 & C_3 \end{bmatrix} \\ \left(\tilde{R}_{Fa_1}\, C_1\right) \quad \left(\tilde{R}_{Fa_2}\, C_2\right) \quad \left(\tilde{R}_{Fa_3}\, C_3\right) \end{bmatrix} U_T\, f_a{}^T \ . \tag{59}$$

To express this equation of motion in concise form, the following definitions are introduced:

$$M_X = \begin{bmatrix} M\, I_{3\times3} & -M\,\tilde{r}_c \\ 0_{3\times3} & I_m \end{bmatrix} \ , \tag{60a}$$

$$C_X = \sum_{i=1}^{2}\begin{bmatrix} C_{u_i}\begin{bmatrix} I_{3\times3} & -\tilde{r}_{u_i} \end{bmatrix} \\ \tilde{r}_{Fu_i}\, C_{u_i}\begin{bmatrix} I_{3\times3} & -\tilde{r}_{u_i} \end{bmatrix} \end{bmatrix} \ , \tag{60b}$$

$$K_X = \sum_{i=1}^{2}\begin{bmatrix} K_{u_i}\begin{bmatrix} I_{3\times3} & -\tilde{r}_{u_i} \end{bmatrix} \\ \tilde{r}_{Fu_i}\, K_{u_i}\begin{bmatrix} I_{3\times3} & -\tilde{r}_{u_i} \end{bmatrix} \end{bmatrix} \ , \tag{60c}$$

$$F_X = -\begin{bmatrix} M\, I_{3\times3} \\ 0_{3\times3} \end{bmatrix}\ddot{R}_0{}^T + \begin{bmatrix} (I_{3\times3}+\tilde{\theta}) \\ \tilde{R}_{Fd} \end{bmatrix} f_d{}^T$$

$$+\begin{bmatrix} \left(I_{3\times3}+\tilde{\theta}\right)\begin{bmatrix} C_1 & C_2 & C_3 \end{bmatrix} \\ \left(\tilde{R}_{Fa_1}\, C_1\right) \quad \left(\tilde{R}_{Fa_2}\, C_2\right) \quad \left(\tilde{R}_{Fa_3}\, C_3\right) \end{bmatrix} U_T\, f_a{}^T \ . \tag{60d}$$

With these definitions, the equation of motion of the platform can be written as the following second order ordinary differential equation:

$$M_X\ddot{\mathbf{X}} + C_X\dot{\mathbf{X}} + K_X\mathbf{X} = F_X \ . \tag{61}$$

3. STATE-SPACE MODEL FORMULATION

For many modern control design methods, the dynamics and measurements of the system to be controlled (the "plant," denoted by a subscripted "p") are expressed in state-space form consisting of first order ordinary differential equations. A standard notation for the state space formulation of the plant dynamics and outputs is

$$\dot{x}_p = A_p x_p + B_{1p} w + B_{2p} u$$

$$y_p = C_p x_p + D_{1p} w + D_{2p} u \quad , \tag{62}$$

where $x_p \in \Re^n$ is the state vector, $w \in \Re^{nw}$ is the disturbance input vector, $u \in \Re^m$ is the control force input vector, and $y_p \in \Re^p$ is the output vector. This section will develop the state-space formulation of the equations of motion in eq. (61) and the sensor measurements. With this application, the outputs consist of acceleration and position measurements at the sensor location.

3.1 Acceleration Sensor Measurement Model

Each g-LIMIT isolator module has two sensors which measure acceleration at the location of the accelerometers in the x and z axis directions of the IM coordinates. The acceleration vector at the location of the accelerometer of the mth IM, $\vec{a}_m$ can be given by

$$\vec{a}_m \approx \ddot{R}_0 \Gamma^T + \ddot{r} \Gamma^T + \dot{\omega} \Lambda^T \times r_{a_m} \Lambda^T$$

$$= \ddot{R}_0 \Gamma^T + \ddot{r} \Gamma^T + \dot{\omega} \tilde{r}_{a_m} \Lambda^T \qquad (m = 1, 2, 3) \quad . \tag{63}$$

Combining eqs. (6) and (25) yields

$$\Lambda^T = C_m \Lambda_m{}^T \tag{64}$$

and

$$\Gamma^T = (I_{3\times3} + \tilde{\theta}) C_m \Lambda_m{}^T \quad . \tag{65}$$

Substituting eqs. (64) and (65) into eq. (63),

$$\vec{a}_m = \ddot{R}_0(I_{3\times3}+\tilde{\theta})C_m\Lambda_m{}^T + \ddot{r}(I_{3\times3}+\tilde{\theta})C_m\Lambda_m{}^T$$

$$+\dot{\omega}\tilde{r}_{a_m}C_m\Lambda_m{}^T$$

$$\approx \ddot{R}_0(I_{3\times3}+\tilde{\theta})C_m\Lambda_m{}^T + [\ddot{x}\ \ddot{y}\ \ddot{z}]C_m\Lambda_m{}^T$$

$$+\left[\ddot{\theta}_x\ \ddot{\theta}_y\ \ddot{\theta}_z\right]\tilde{r}_{a_m}C_m\Lambda_m{}^T \qquad (m=1,2,3) \quad . \tag{66}$$

Writing eq. (66) in the matrix form using the state X,

$$a_m{}^T = C_m{}^T\left(I_{3\times3}-\tilde{\theta}\right)\ddot{R}_0{}^T + C_m{}^T\left[I_{3\times3} \quad -\tilde{r}_{a_m}\right]\ddot{\mathbf{X}} \qquad (m=1,2,3) \quad . \tag{67}$$

Then, the acceleration output of two accelerometers of the mth IM can be given by

$$\begin{Bmatrix} a_{m_x} \\ a_{m_z} \end{Bmatrix} = \begin{bmatrix} 1 & 0 & 0 \\ 0 & 0 & 1 \end{bmatrix} a_m{}^T \qquad (m=1,2,3)$$

$$= \begin{bmatrix} 1 & 0 & 0 \\ 0 & 0 & 1 \end{bmatrix} C_m{}^T\left[I_{3\times3} \quad -\tilde{r}_{a_m}\right]\ddot{\mathbf{X}}$$

$$+\begin{bmatrix} 1 & 0 & 0 \\ 0 & 0 & 1 \end{bmatrix} C_m{}^T\left(I_{3\times3}-\tilde{\theta}\right)\ddot{R}_0{}^T \ . \tag{68}$$

Therefore, the total acceleration measurement vector, $A=\left[a_{1_x}\ a_{1_z}\ a_{2_x}\ a_{2_z}\ a_{3_x}\ a_{3_z}\right]$, can be determined by

$$A^T = \begin{bmatrix} \begin{bmatrix} 1 & 0 & 0 \\ 0 & 0 & 1 \end{bmatrix} C_1{}^T\left[I_{3\times3} \quad -\tilde{r}_{a_1}\right] \\ \begin{bmatrix} 1 & 0 & 0 \\ 0 & 0 & 1 \end{bmatrix} C_2{}^T\left[I_{3\times3} \quad -\tilde{r}_{a_2}\right] \\ \begin{bmatrix} 1 & 0 & 0 \\ 0 & 0 & 1 \end{bmatrix} C_3{}^T\left[I_{3\times3} \quad -\tilde{r}_{a_3}\right] \end{bmatrix} \ddot{\mathbf{X}} + \begin{bmatrix} \begin{bmatrix} 1 & 0 & 0 \\ 0 & 0 & 1 \end{bmatrix} C_1{}^T\left(I_{3\times3}-\tilde{\theta}\right) \\ \begin{bmatrix} 1 & 0 & 0 \\ 0 & 0 & 1 \end{bmatrix} C_2{}^T\left(I_{3\times3}-\tilde{\theta}\right) \\ \begin{bmatrix} 1 & 0 & 0 \\ 0 & 0 & 1 \end{bmatrix} C_3{}^T\left(I_{3\times3}-\tilde{\theta}\right) \end{bmatrix} \ddot{R}_0{}^T$$

$$= T_X^A\ddot{\mathrm{X}} + A_1\ddot{R}_0{}^T \ . \tag{69}$$

3.2 Position Sensor Measurement Model

Each g-LIMIT IM has two position sensors which measure the relative displacement of the isolated platform with respect to the MSG-fixed base at the location of position sensor in the x and z axis directions of the IM coordinates. The relative position vector at the location of position sensor of the mth IM, $\vec{\delta}_{P_m}$ is given by

$$\begin{aligned}
\vec{\delta}_{P_m} &= (\vec{R}_b + \vec{r} + \vec{r}_{P_m}) - \vec{R}_{P_m} \qquad (m = 1, 2, 3) \\
&= R_b\Gamma^T + r\Gamma^T + r_{P_m}\Lambda^T - R_{P_m}\Gamma^T \\
&= R_b\Gamma^T + r\Gamma^T + r_{P_m}(I_{3\times3} - \tilde{\theta})\Gamma^T - R_{P_m}\Gamma^T \\
&= (R_b + r_{P_m} - R_{P_m})\Gamma^T + [x\ y\ z]\Gamma^T + \left[\theta_x\ \theta_y\ \theta_z\right]\tilde{r}_{P_m}\Gamma^T \ .
\end{aligned} \tag{70}$$

Note that the first term of eq. (70) is zero. Substituting eq. (65) into eq. (70) and then obtaining first order terms yields

$$\begin{aligned}
\vec{\delta}_{P_m} &= [x\ y\ z]\Gamma^T + \left[\theta_x\ \theta_y\ \theta_z\right]\tilde{r}_{P_m}\Gamma^T \quad (m = 1, 2, 3) \\
&\approx [x\ y\ z]C_m\Lambda_m{}^T + \left[\theta_x\ \theta_y\ \theta_z\right]\tilde{r}_{P_m}C_m\Lambda_m{}^T \ .
\end{aligned} \tag{71}$$

Writing eq. (71) in matrix form using the state **X**,

$$\delta_{P_m}{}^T = C_m{}^T\left[I_{3\times3} \quad -\tilde{r}_{P_m}\right]\mathbf{X} \qquad (m = 1, 2, 3) \ . \tag{72}$$

Then, the output of two position sensors of the mth IM can be given by

$$\begin{aligned}
\begin{Bmatrix} \delta_{P_{mx}} \\ \delta_{P_{mz}} \end{Bmatrix} &= \begin{bmatrix} 1 & 0 & 0 \\ 0 & 0 & 1 \end{bmatrix}\delta_{P_m}{}^T \qquad (m = 1, 2, 3) \\
&= \begin{bmatrix} 1 & 0 & 0 \\ 0 & 0 & 1 \end{bmatrix}C_m{}^T\left[I_{3\times3} \quad -\tilde{r}_{P_m}\right]\mathbf{X} \ .
\end{aligned} \tag{73}$$

Therefore, the total position measurement vector, $\delta P = \left[\delta_{P_{1x}}\ \delta_{P_{1z}}\ \delta_{P_{2x}}\ \delta_{P_{2z}}\ \delta_{P_{3x}}\ \delta_{P_{3z}}\right]$, can be determined by

$$\delta P^T = \begin{bmatrix} \begin{bmatrix} 1 & 0 & 0 \\ 0 & 0 & 1 \end{bmatrix} C_1{}^T \begin{bmatrix} I_{3\times 3} & -\tilde{r}_{P_1} \end{bmatrix} \\ \begin{bmatrix} 1 & 0 & 0 \\ 0 & 0 & 1 \end{bmatrix} C_2{}^T \begin{bmatrix} I_{3\times 3} & -\tilde{r}_{P_2} \end{bmatrix} \\ \begin{bmatrix} 1 & 0 & 0 \\ 0 & 0 & 1 \end{bmatrix} C_3{}^T \begin{bmatrix} I_{3\times 3} & -\tilde{r}_{P_3} \end{bmatrix} \end{bmatrix} \mathbf{X}$$

$$\equiv T_X^P\, \mathbf{X}\ . \tag{74}$$

3.3 State and Output Equations

The state space equations may now be written. From eq. (61), the dynamics of the platform may be written as

$$\ddot{\mathbf{X}} = M_X{}^{-1} F_X - M_X{}^{-1} C_X \dot{\mathbf{X}} - M_X{}^{-1} K_X \mathbf{X}\ . \tag{75}$$

This second order differential equation can be written in state space form by defining the state, input, and output vectors as follows:

- State vector: $x_p = \left[\boldsymbol{X}^T\ \dot{\boldsymbol{X}}^T\right]^T$
- Disturbance input vector: $w = \left[\ddot{R}_o\ f_d\right]^T$
- Control force input vector: $u = f_a^T$
- Output vector: $y_p = \left[\delta P\ \ddot{\boldsymbol{X}}^T\right]^T$.

The resulting state space equations are:

$$
\begin{aligned}
\dot{x}_p &= \begin{bmatrix} 0_{6\times6} & I_{6\times6} \\ -M_X^{-1}K_X & -M_X^{-1}C_X \end{bmatrix} x_p + \begin{bmatrix} 0_{6\times3} & 0_{6\times3} \\ -M_X^{-1}\begin{bmatrix} M\, I_{3\times3} \\ 0_{3\times3} \end{bmatrix} & M_X^{-1}\begin{bmatrix} (I_{3\times3}+\tilde{\theta}) \\ \tilde{R}_{Fd} \end{bmatrix} \end{bmatrix} w \\
&+ \begin{bmatrix} 0_{6\times6} \\ M_X^{-1}\begin{bmatrix} \left(I_{3\times3}+\tilde{\theta}\right)\begin{bmatrix} C_1 & C_2 & C_3 \end{bmatrix} \\ \left(\tilde{R}_{Fa_1}C_1\right) \quad \left(\tilde{R}_{Fa_2}C_2\right) \quad \left(\tilde{R}_{Fa_3}C_3\right) \end{bmatrix} U_T \end{bmatrix} u \\
y_p &= \begin{bmatrix} T_X^P & 0_{6\times6} \\ -M_X^{-1}K_X & -M_X^{-1}C_X \end{bmatrix} x_p + \begin{bmatrix} 0_{6\times3} & 0_{6\times3} \\ -M_X^{-1}\begin{bmatrix} M\, I_{3\times3} \\ 0_{3\times3} \end{bmatrix} & M_X^{-1}\begin{bmatrix} (I_{3\times3}+\tilde{\theta}) \\ \tilde{R}_{Fd} \end{bmatrix} \end{bmatrix} w \\
&+ \begin{bmatrix} 0_{6\times6} \\ M_X^{-1}\begin{bmatrix} \left(I_{3\times3}+\tilde{\theta}\right)\begin{bmatrix} C_1 & C_2 & C_3 \end{bmatrix} \\ \left(\tilde{R}_{Fa_1}C_1\right) \quad \left(\tilde{R}_{Fa_2}C_2\right) \quad \left(\tilde{R}_{Fa_3}C_3\right) \end{bmatrix} U_T \end{bmatrix} u \ .
\end{aligned}
\tag{76}
$$

The coefficient matrices can now be identified by comparison of eq. (76) with eq. (62).

4. UNCERTAINTY MODELING FOR CONTROL DESIGN AND ANALYSIS

A key objective of control system design is robustness to variations between the actual system and the model on which control designs are based. For microgravity vibration isolation systems, the primary uncertain parameters of interest are the payload mass, umbilical stiffness, umbilical damping, and composite isolation system/payload center of gravity (cg). Although both mass and stiffness or mass and damping uncertainties are important for consideration, it is evident that the mass terms appear in the system A matrix (from which stability is determined) as products with the stiffness and damping. Hence, both uncertainties cannot be considered simultaneously with standard linear robust control methods. Simultaneous mass and stiffness or mass and damping uncertainty need not be considered, however, since mass uncertainty may be effectively accounted for in either stiffness and damping uncertainty or uncertainty in the product term itself. In the following section, the uncertain dynamics will be developed for parametric uncertainty in stiffness, damping, and cg location. For a treatment of uncertainty in the product term (system natural frequency and damping ratio), see references 2 and 3.

Considering only one uncertain umbilical and treating the uncertainties as additive parametric uncertainty, the uncertain umbilical stiffness, damping, and composite cg location may be defined, respectively, as

$$K_{u1} = (K_{u1})_0 + \Delta K_u$$

$$C_{u1} = (C_{u1})_0 + \Delta C_u$$

$$r_c = r_{c0}(1 + \delta_{cg}) \ , \tag{77}$$

where the zero subscript indicates the nominal value.

The uncertain cg location implies uncertain moment arm for the application of umbilical and actuator forces as well:

$$\begin{aligned} r_{Fu1} &= r_{u1} - r_c \\ &= (r_{u1})_0 - \delta_{cg} r_{c0} \end{aligned} \tag{78}$$

and

$$\begin{aligned} r_{Fam} &= r_{fm} - r_c \\ &= (r_{Fam})_0 - \delta_{cg} r_{c0} \ . \end{aligned} \tag{79}$$

The skew symmetric matrices become

$$\begin{aligned}
\tilde{r}_c &= \tilde{r}_{c0} + \delta_{cg}\tilde{r}_{c0} \\
\tilde{r}_{Fu1} &= (\tilde{r}_{Fu1})_0 - \delta_{cg}\tilde{r}_{c0} \\
\tilde{r}_{Fam} &= (\tilde{r}_{Fam})_0 - \delta_{cg}\tilde{r}_{c0} \quad ,
\end{aligned} \tag{80}$$

and from eq. (57a),

$$\begin{aligned}
\tilde{R}_{Fam} &= [\tilde{r}_{Fam} + \tilde{r}_{Fam}\tilde{\theta} - (r_{Fam}\tilde{\theta})^{\sim}] \\
&= (\tilde{R}_{Fam})_0 - \delta_{cg}\tilde{R}_{c0} \quad .
\end{aligned} \tag{81}$$

These uncertain terms are now substituted into the coefficient matrices of the state space equations of motion, eq. (76). From eq. (60a),

$$M_X = \begin{bmatrix} MI_{3\times3} & -M\tilde{r}_c \\ 0_{3\times3} & I_M \end{bmatrix} = \begin{bmatrix} MI_{3\times3} & -M(\tilde{r}_{c0} + \delta_{cg}\tilde{r}_{c0}) \\ 0_{3\times3} & I_M \end{bmatrix} , \tag{82}$$

with the inverse given by (ref. 5, p. 656):

$$M_X^{-1} = \begin{bmatrix} M^{-1}I_{3\times3} & (\tilde{r}_{c0} + \delta_{cg}\tilde{r}_{c0})I_M^{-1} \\ 0_{3\times3} & I_M^{-1} \end{bmatrix} . \tag{83}$$

Also from eq. (60c), for one umbilical

$$K_X = \begin{bmatrix} (K_{u1})_0 + \Delta K_u \\ ((\tilde{r}_{Fu1})_0 - \delta_{cg}\tilde{r}_{c0})((K_{u1})_0 + \Delta K_u) \end{bmatrix} \begin{bmatrix} I_{3\times3} & -\tilde{r}_{u1} \end{bmatrix} \tag{84}$$

and likewise from eq. (60b),

$$C_X = \begin{bmatrix} (C_{u1})_0 + \Delta C_u \\ ((\tilde{r}_{Fu1})_0 - \delta_{cg}\tilde{r}_{c0})((C_{u1})_0 + \Delta C_u) \end{bmatrix} \begin{bmatrix} I_{3\times3} & -\tilde{r}_{u1} \end{bmatrix} . \tag{85}$$

The first product term to be expressed is the product $M_X^{-1}K_X$, given by

$$M_X^{-1}K_X = \begin{bmatrix} M^{-1}I_{3\times3} & (\tilde{r}_{c0} + \delta_{cg}\tilde{r}_{c0})I_M^{-1} \\ 0_{3\times3} & I_M^{-1} \end{bmatrix} \begin{bmatrix} (K_{u1})_0 + \Delta K_u \\ ((\tilde{r}_{Fu1})_0 - \delta_{cg}\tilde{r}_{c0})((K_{u1})_0 + \Delta K_u) \end{bmatrix} \begin{bmatrix} I_{3\times3} & -\tilde{r}_{u1} \end{bmatrix} , \tag{86}$$

which after neglecting products of uncertainties becomes

$$\begin{aligned} M_X^{-1}K_X = (M_X^{-1}K_X)_0 &+ \begin{bmatrix} M^{-1}I_{3\times3} + \tilde{r}_{c0}I_M^{-1}(\tilde{r}_{Fu1})_0 \\ I_M^{-1}(\tilde{r}_{Fu1})_0 \end{bmatrix} \Delta K_u \begin{bmatrix} I_{3\times3} & -\tilde{r}_{u1} \end{bmatrix} \\ &+ \begin{bmatrix} \tilde{r}_{c0}I_M^{-1}((\tilde{r}_{Fu1})_0 - \tilde{r}_{c0}) \\ -I_M^{-1}\tilde{r}_{c0} \end{bmatrix} \delta_{cg}(K_{u1})_0 \begin{bmatrix} I_{3\times3} & -\tilde{r}_{u1} \end{bmatrix} . \end{aligned} \tag{87}$$

Similarly, the mass and damping product term is

$$\begin{aligned} M_X^{-1}C_X = (M_X^{-1}C_X)_0 &+ \begin{bmatrix} M^{-1}I_{3\times3} + \tilde{r}_{c0}I_M^{-1}(\tilde{r}_{Fu1})_0 \\ I_M^{-1}(\tilde{r}_{Fu1})_0 \end{bmatrix} \Delta C_u \begin{bmatrix} I_{3\times3} & -\tilde{r}_{u1} \end{bmatrix} \\ &+ \begin{bmatrix} \tilde{r}_{c0}I_M^{-1}((\tilde{r}_{Fu1})_0 - \tilde{r}_{c0}) \\ -I_M^{-1}\tilde{r}_{c0} \end{bmatrix} \delta_{cg}(C_{u1})_0 \begin{bmatrix} I_{3\times3} & -\tilde{r}_{u1} \end{bmatrix} . \end{aligned} \tag{88}$$

Considering the uncertain component of the B_{1p} matrix,

$$M_X^{-1}\begin{bmatrix}\left(I_{3\times3}+\tilde{\theta}\right)\begin{bmatrix}C_1 & C_2 & C_3\end{bmatrix} \\ \left(\tilde{R}_{Fa_1}C_1\right) \quad \left(\tilde{R}_{Fa_2}C_2\right) \quad \left(\tilde{R}_{Fa_3}C_3\right)\end{bmatrix}$$

$$=\begin{bmatrix}M^{-1}\left(I_{3\times3}+\tilde{\theta}\right)\begin{bmatrix}C_1 & C_2 & C_3\end{bmatrix}+\tilde{r}_{c0}I_M^{-1}\begin{bmatrix}(\tilde{R}_{Fa1})_0C_1 & (\tilde{R}_{Fa2})_0C_2 & (\tilde{R}_{Fa3})_0C_3\end{bmatrix} \\ I_M^{-1}\begin{bmatrix}(\tilde{R}_{Fa1})_0C_1 & (\tilde{R}_{Fa2})_0C_2 & (\tilde{R}_{Fa3})_0C_3\end{bmatrix}\end{bmatrix}$$

$$+\begin{bmatrix}\delta_{cg}\tilde{r}_{c0}I_M^{-1}\begin{bmatrix}((\tilde{R}_{Fa1})_0-\tilde{R}_{c0})C_1 & ((\tilde{R}_{Fa2})_0-\tilde{R}_{c0})C_2 & ((\tilde{R}_{Fa3})_0-\tilde{R}_{c0})C_3\end{bmatrix} \\ -\delta_{cg}I_M^{-1}\tilde{R}_{c0}\begin{bmatrix}C_1 & C_2 & C_3\end{bmatrix}\end{bmatrix}. \tag{89}$$

The partitions of the A_P matrix in eq. (76) may now be evaluated by considering the nominal and uncertain components of the preceding uncertain product terms. The system A_P matrix may be written as the nominal portion plus the uncertain contributions, or

$$A_P = A_0 + \Delta A_K + \Delta A_C + \Delta A_{cg} \ , \tag{90}$$

where the nominal portion, A_0, is the A_P matrix corresponding to zero uncertainty. By grouping the uncertain terms of the individual product terms, the uncertain components of A_P are

$$\begin{aligned}\Delta A_K &= \begin{bmatrix}0_{6\times6} & 0_{6\times6} \\ \begin{bmatrix}-M^{-1}I_{3\times3} & -\tilde{r}_{c0}I_M^{-1}(\tilde{r}_{Fu1})_0 \\ & -I_M^{-1}(\tilde{r}_{Fu1})_0\end{bmatrix}\Delta K_u\begin{bmatrix}I_{3\times3} & -\tilde{r}_{u1}\end{bmatrix} & 0_{6\times6}\end{bmatrix} \\ &= \begin{bmatrix}0_{6\times3} \\ \left(-M_X^{-1}\right)_0\begin{bmatrix}I_{3\times3} \\ (\tilde{r}_{Fu1})_0\end{bmatrix}\end{bmatrix}\Delta K_u\begin{bmatrix}\begin{bmatrix}I_{3\times3} & -\tilde{r}_{u1}\end{bmatrix} & 0_{3\times6}\end{bmatrix} \\ &= \Delta A_{KL} * \Delta K_u * \Delta A_{KR} \ ,\end{aligned} \tag{91}$$

$$\begin{aligned}\Delta A_C &= \begin{bmatrix}0_{6\times6} & 0_{6\times6} \\ 0_{6\times6} & \left(-M_X^{-1}\right)_0\begin{bmatrix}I_{3\times3} \\ (\tilde{r}_{Fu1})_0\end{bmatrix}\Delta C_u\begin{bmatrix}I_{3\times3} & -\tilde{r}_{u1}\end{bmatrix}\end{bmatrix} \\ &= \begin{bmatrix}0_{6\times3} \\ \left(-M_X^{-1}\right)_0\begin{bmatrix}I_{3\times3} \\ (\tilde{r}_{Fu1})_0\end{bmatrix}\end{bmatrix}\Delta C_u\begin{bmatrix}0_{3\times6} & \begin{bmatrix}I_{3\times3} & -\tilde{r}_{u1}\end{bmatrix}\end{bmatrix} \\ &= \Delta A_{CL} * \Delta C_u * \Delta A_{CR} \ ,\end{aligned} \tag{92}$$

and

$$\Delta A_{cg} = \begin{bmatrix} 0_{6\times6} & 0_{6\times6} \\ -\begin{bmatrix} \tilde{r}_{c0} I_M^{-1}((\tilde{r}_{Fu1})_0 - \tilde{r}_{c0}) \\ -I_M^{-1}\tilde{r}_{c0} \end{bmatrix} \delta_{cg}(K_{u1})_0 \begin{bmatrix} I_{3\times3} & -\tilde{r}_{u1} \end{bmatrix} & -\begin{bmatrix} \tilde{r}_{c0} I_M^{-1}((\tilde{r}_{Fu1})_0 - \tilde{r}_{c0}) \\ -I_M^{-1}\tilde{r}_{c0} \end{bmatrix} \delta_{cg}(C_{u1})_0 \begin{bmatrix} I_{3\times3} & -\tilde{r}_{u1} \end{bmatrix} \end{bmatrix}$$

$$= \begin{bmatrix} 0_{6\times3} \\ -\begin{bmatrix} \tilde{r}_{c0} I_M^{-1}((\tilde{r}_{Fu1})_0 - \tilde{r}_{c0}) \\ -I_M^{-1}\tilde{r}_{c0} \end{bmatrix} \end{bmatrix} \delta_{cg} I_{3\times3} \begin{bmatrix} (K_{u1})_0 \begin{bmatrix} I_{3\times3} & -\tilde{r}_{u1} \end{bmatrix} & (C_{u1})_0 \begin{bmatrix} I_{3\times3} & -\tilde{r}_{u1} \end{bmatrix} \end{bmatrix}$$

$$= \Delta A_{cgL} * \delta_{cg} I_{3\times3} * \Delta A_{cgR} \ . \tag{93}$$

Finally,

$$\Delta B_{2p} = \begin{bmatrix} 0_{6\times6} \\ \begin{bmatrix} \tilde{r}_{c0} I_M^{-1} & 0_{3\times3} \\ 0_{3\times3} & -I_M^{-1}\tilde{R}_{c0} \end{bmatrix} \end{bmatrix} \delta_{cg} I_{6\times6} \begin{bmatrix} ((\tilde{R}_{Fa1})_0 - \tilde{R}_{c0})C_1 & ((\tilde{R}_{Fa2})_0 - \tilde{R}_{c0})C_2 & ((\tilde{R}_{Fa3})_0 - \tilde{R}_{c0})C_3 \\ C_1 & C_2 & C_3 \end{bmatrix} U_T$$

$$= \Delta B_{2pL} * \delta_{cg} I_{6\times6} * \Delta B_{2pR} \ . \tag{94}$$

Note that uncertainties in the disturbance input are not included herein as they are treated directly in the weight selection for robust control design.

A block diagram of the uncertain plant with these uncertainties is given in figure 2.

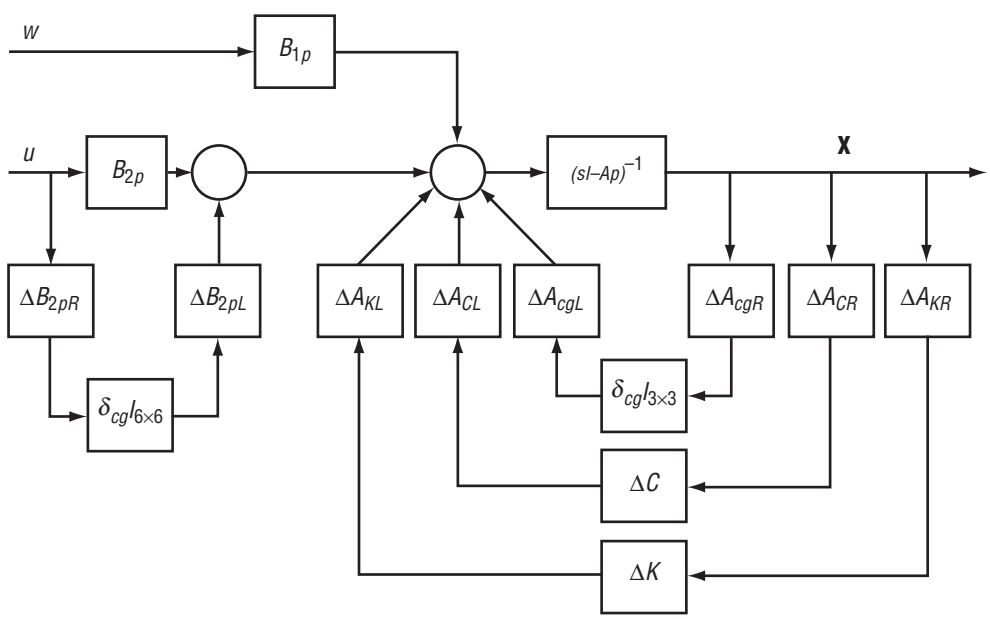

Figure 2. Uncertain plant block diagram.

5. MATHEMATICAL MODEL VERIFICATION

In the previous sections the mathematical model of the g-LIMIT dynamics and control system is derived to analyze the dynamics of g-LIMIT and to design control systems for g-LIMIT. This mathematical model was developed for an arbitrary configuration and mass properties, allowing easy adaptation to other isolation systems in addition to g-LIMIT. In order to verify this mathematical model, it was coded using MATLAB™ and simulated for various test cases using the configuration and mass properties of the suppression of transient acceleration by levitation evaluation (STABLE) vibration isolation system.[4] These simulation results were compared with those obtained from the STABLE TREETOPS model.[4] For these simulations, accelerometer bias and noises were not included.

First, to check the validity of the six DOF equations of motion of the platform and mathematical models of position sensors and accelerometers, a direct disturbance force was given on the CM of the platform and then time-response simulation was performed without controllers on. Second, to check the validity of acceleration control logic and the interaction between the system dynamics and the acceleration controller, a sinusoidal base acceleration disturbance was given without any direct disturbance force and the time response simulation was performed with only acceleration controller on. Finally, to check the validity of position proportional-integral-derivative control logic and the interaction between the system dynamics, the acceleration controller and the position controller, an initial displacement was given to the platform without any other disturbance and then the time response simulation was performed with both acceleration and position controllers on. For all three test cases the output of six position sensors and six accelerometers obtained from the mathematical model derived herein and the STABLE TREETOPS model were matched. Therefore, this mathematical model is believed to be accurate under the assumption of small motions.

6. CONCLUSIONS

This TM documents the mathematical modeling of the g-LIMIT system that was developed to provide the dynamic equations of motion in state equation form for control system design. State-space equations are provided for acceleration and relative position measurements at both the platform CM and the sensor locations. Disturbance inputs consist of base acceleration and a directly applied force. This mathematical model will also be used for a reference to verify a g-LIMIT TREETOPS model which will be developed and used as the truth model to predict the performance of the g-LIMIT system with the designed controller.

Since final configuration and mass properties of the g-LIMIT system are not yet determined, the equations of motion were derived for a general configuration of a six-DOF rigid body system. However, this mathematical model was verified against the TREETOPS model for the STABLE configuration and can be easily modified for the final g-LIMIT configuration.

REFERENCES

1. Whorton, M.S.: "Design Definition Document of Glovebox Integrated Microgravity Isolation Technology (g-LIMIT) Characterization Test," g-LIMIT–DOC–0001, September 30, 1999.

2. Balas, G.J.; and Young, P.M.: "Control Design for Variations in Structural Natural Frequencies," *Journal of Guidance, Control, and Dynamics*, Vol. 18, No. 2, pp. 325–332, March–April 1995.

3. Whorton, M.S.; Calise, A.J.; and Hsu, C.-C.: "A Study of Fixed-Order Mixed Norm Designs for a Benchmark Problem in Structural Control," *Earthquake Engineering and Structural Dynamics*, Vol. 27, pp. 1315–1330, 1998.

4. Nurre, G.S.; Kim, Y.K.; and Whorton, M.S.: "A TREETOPS Simulation of the STABLE Microgravity Vibration Isolation System," NASA TM—1999–209009, January 1999.

5. Kailath, T.: *Linear Systems*, Prentice-Hall, Englewood Cliffs, NJ, 1980.

REPORT DOCUMENTATION PAGE

Form Approved
OMB No. 0704-0188

Public reporting burden for this collection of information is estimated to average 1 hour per response, including the time for reviewing instructions, searching existing data sources, gathering and maintaining the data needed, and completing and reviewing the collection of information. Send comments regarding this burden estimate or any other aspect of this collection of information, including suggestions for reducing this burden, to Washington Headquarters Services, Directorate for Information Operation and Reports, 1215 Jefferson Davis Highway, Suite 1204, Arlington, VA 22202-4302, and to the Office of Management and Budget, Paperwork Reduction Project (0704-0188), Washington, DC 20503

1. AGENCY USE ONLY *(Leave Blank)*	2. REPORT DATE	3. REPORT TYPE AND DATES COVERED
	October 2001	Technical Memorandum

4. TITLE AND SUBTITLE

Equations of Motion for the g-LIMIT Microgravity Vibration Isolation System

5. FUNDING NUMBERS

6. AUTHORS

Y.K. Kim and M.S. Whorton

7. PERFORMING ORGANIZATION NAMES(S) AND ADDRESS(ES)

George C. Marshall Space Flight Center
Marshall Space Flight Center, AL 35812

8. PERFORMING ORGANIZATION REPORT NUMBER

M–1028

9. SPONSORING/MONITORING AGENCY NAME(S) AND ADDRESS(ES)

National Aeronautics and Space Administration
Washington, DC 20546–0001

10. SPONSORING/MONITORING AGENCY REPORT NUMBER

NASA/TM—2001–211301

11. SUPPLEMENTARY NOTES

Prepared by the Vehicle Control Systems Group of the Transportation Directorate.

12a. DISTRIBUTION/AVAILABILITY STATEMENT

Unclassified-Unlimited
Subject Category 18
Nonstandard Distribution

12b. DISTRIBUTION CODE

13. ABSTRACT *(Maximum 200 words)*

A desirable microgravity environment for experimental science payloads may require an active vibration isolation control system. A vibration isolation system named g-LIMIT (GLovebox Integrated Microgravity Isolation Technology) is being developed by NASA Marshall Space Flight Center to support microgravity science experiments using the microgravity science glovebox. In this technical memorandum, the full six-degree-of-freedom nonlinear equations of motion for g-LIMIT are derived. Although the motivation for this model development is control design and analysis of g-LIMIT, the equations are derived for a general configuration and may be used for other isolation systems as well.

14. SUBJECT TERMS

microgravity, vibration isolation, dynamics, equations of motion

15. NUMBER OF PAGES

36

16. PRICE CODE

17. SECURITY CLASSIFICATION OF REPORT	18. SECURITY CLASSIFICATION OF THIS PAGE	19. SECURITY CLASSIFICATION OF ABSTRACT	20. LIMITATION OF ABSTRACT
Unclassified	Unclassified	Unclassified	Unlimited